DATAMASTER DRAWINGS			
PART #	**REVISION**	**BARE BRD**	**DESCRIPTION**
21063			Dutch Transformer
41218	A	32220	Power Supply
41219	E,F,G		Power Supply
41220		32215	Pump Driver Board
41223	E,F	32217	Detector Board
41224	B,C	32214	Printer Driver
41225	C	32218	Sample Chamber Control
41226	A,B	32219	RFI Detector
41259	B	32224	CPU Power Monitor
41260	A	32230	Serial Memory
41331		32206	Digital Barometer
41333	A	32229	Solenoid Power Control
41363	A	32226	DM Memory Board
41370	A	32503	Pump/Fan Driver
41394	B	32284	Digital Thermometer
41403		32505	Modem Board (300-1200)
41425	A		Sample Chamber Control
41428	A,B	32305	2 Wire Transmitter
41600		32500	DMT Power Board
41625	A,B	32308	Sample Chamber Control
45107	A,B,C	32502	Keyboard Driver
45118	A	32270	Serial Interface
45119	A	32504	Multi I/O Board
45120	B,C	32501	DM CPU
45125	A,B	32211	Parallel Port Adapter
45130	A	32221	Parallel Printer Driver
KEYBOARD			New Keyboard Driver

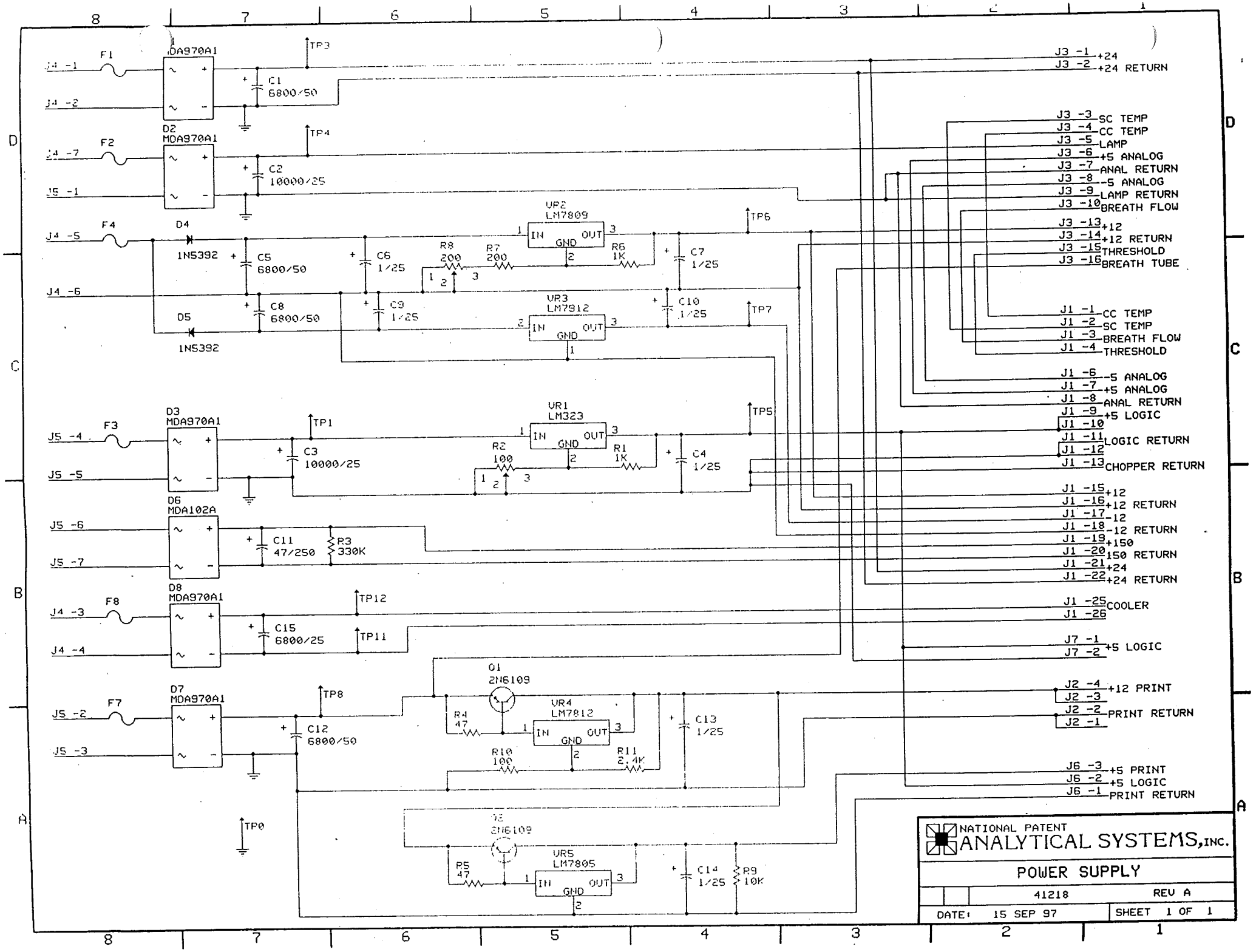
J4 -1
J4 -2
F1
D1
MDA970A1
TP3
C1
6800/50
J4 -7
J5 -1
F2
D2
MDA970A1
TP4
C2
10000/25
J4 -5
J4 -6
F4
D4
1N5392
D5
1N5392
C5
6800/50
C8
6800/50
C6
1/25
C9
1/25
R8
200
R7
200
VR2
LM7809
IN
OUT
GND
R6
1K
C7
1/25
TP6
VR3
LM7912
C10
1/25
TP7
J5 -4
J5 -5
F3
D3
MDA970A1
TP1
C3
10000/25
R2
100
VR1
LM323
R1
1K
C4
1/25
TP5
J5 -6
J5 -7
D6
MDA102A
C11
47/250
R3
330K
J4 -3
J4 -4
F8
D8
MDA970A1
TP12
C15
6800/25
TP11
J5 -2
J5 -3
F7
D7
MDA970A1
TP8
C12
6800/50
Q1
2N6109
R4
47
VR4
LM7812
R10
100
R11
2.4K
C13
1/25
TP0
Q2
2N6109
R5
47
VR5
LM7805
C14
1/25
R9
10K
J3 -1 +24
J3 -2 +24 RETURN
J3 -3 SC TEMP
J3 -4 CC TEMP
J3 -5 LAMP
J3 -6 +5 ANALOG
J3 -7 ANAL RETURN
J3 -8 -5 ANALOG
J3 -9 LAMP RETURN
J3 -10 BREATH FLOW
J3 -13 +12
J3 -14 +12 RETURN
J3 -15 THRESHOLD
J3 -16 BREATH TUBE
J1 -1 CC TEMP
J1 -2 SC TEMP
J1 -3 BREATH FLOW
J1 -4 THRESHOLD
J1 -6 -5 ANALOG
J1 -7 +5 ANALOG
J1 -8 ANAL RETURN
J1 -9 +5 LOGIC
J1 -10
J1 -11 LOGIC RETURN
J1 -12
J1 -13 CHOPPER RETURN
J1 -15 +12
J1 -16 +12 RETURN
J1 -17 -12
J1 -18 -12 RETURN
J1 -19 +150
J1 -20 150 RETURN
J1 -21 +24
J1 -22 +24 RETURN
J1 -25 COOLER
J1 -26
J7 -1
J7 -2 +5 LOGIC
J2 -4 +12 PRINT
J2 -3
J2 -2 PRINT RETURN
J2 -1
J6 -3 +5 PRINT
J6 -2 +5 LOGIC
J6 -1 PRINT RETURN
NATIONAL PATENT
ANALYTICAL SYSTEMS, INC.
POWER SUPPLY
41218
REV A
DATE: 15 SEP 97
SHEET 1 OF 1

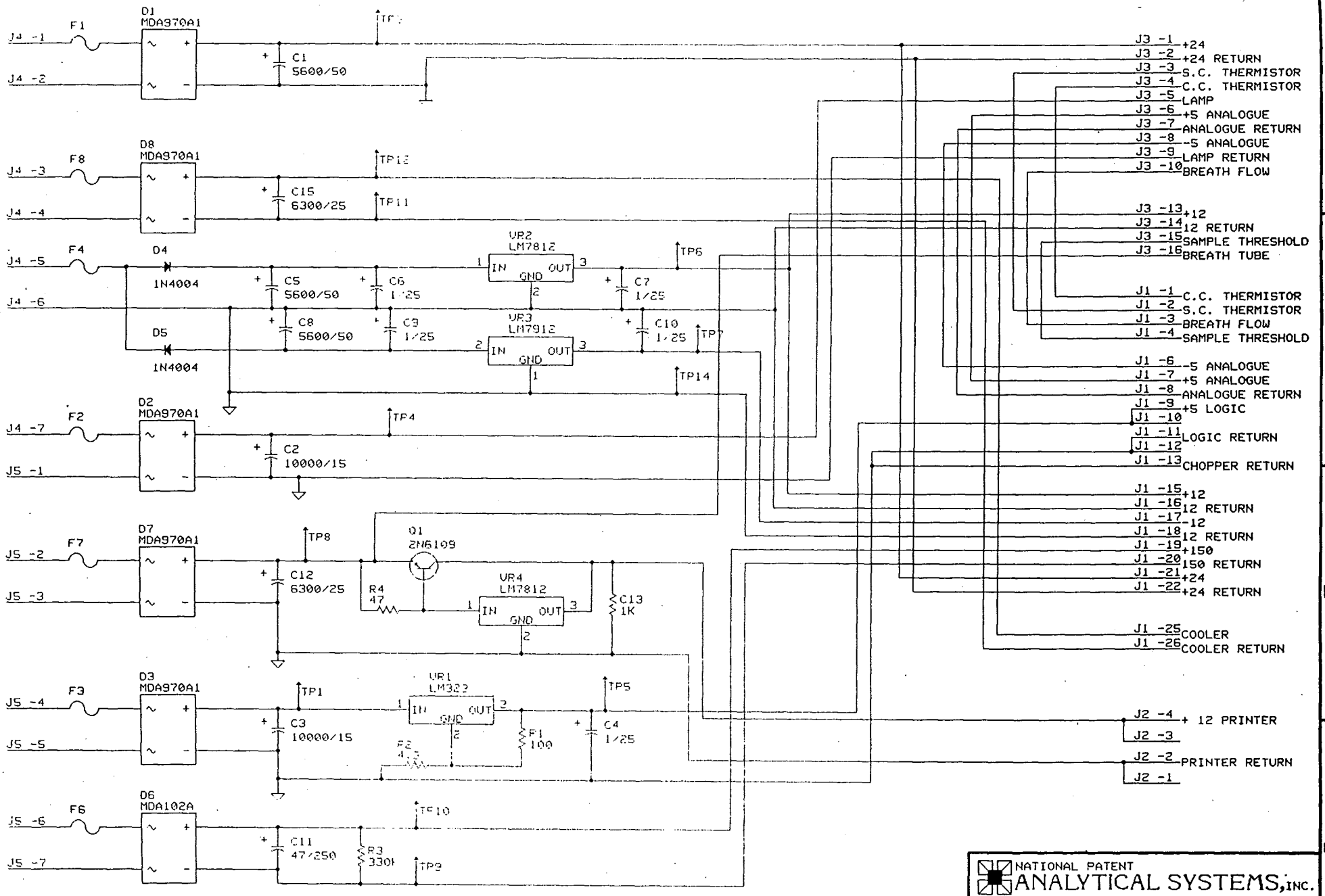

NATIONAL PATENT
ANALYTICAL SYSTEMS, INC.

POWER SUPPLY

41219 REV G

DATE: 02 OCT 96 SHEET 1 OF 1

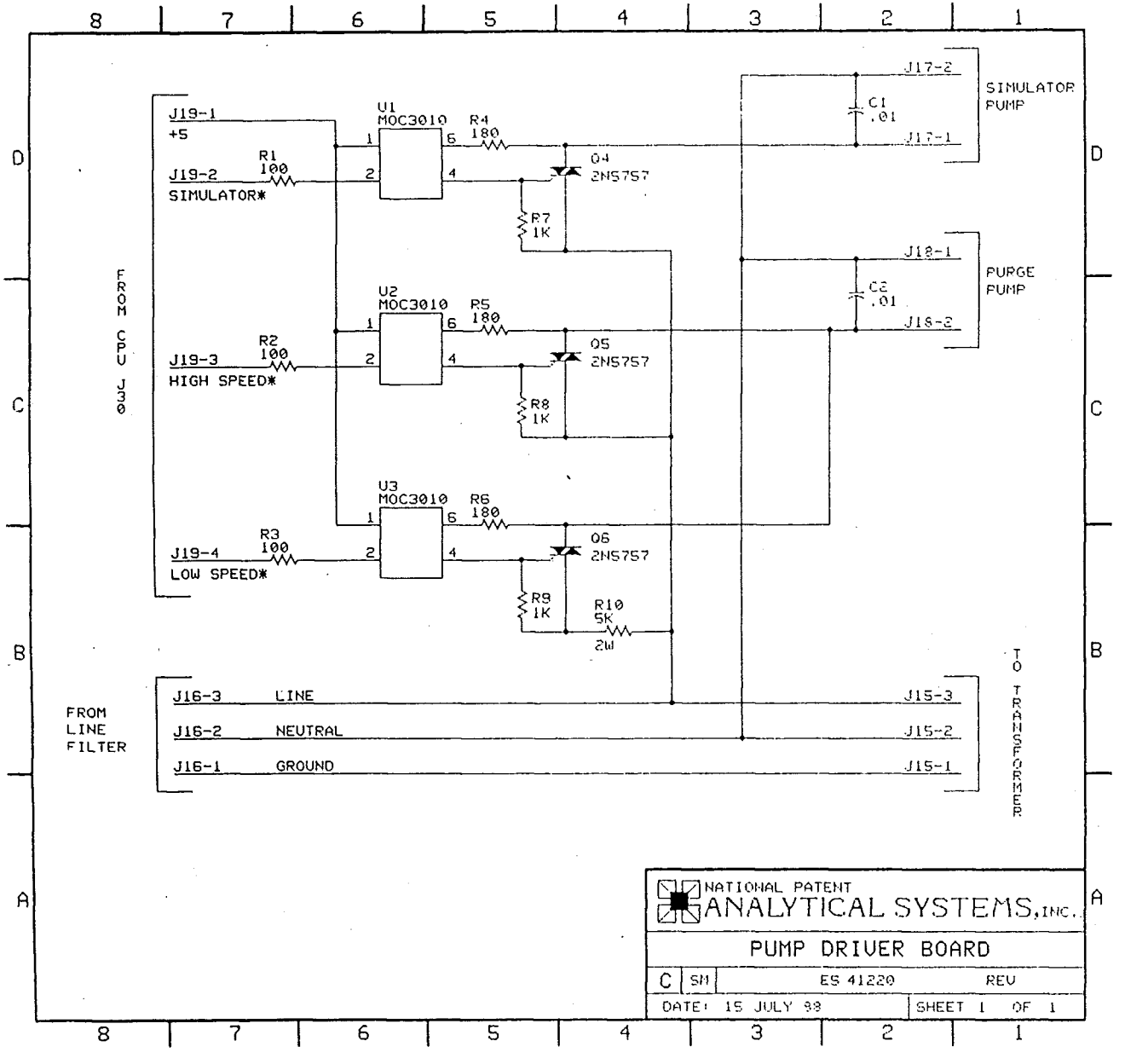
FROM CPU J30
J19-1
+5
J19-2
SIMULATOR*
J19-3
HIGH SPEED*
J19-4
LOW SPEED*
R1 100
R2 100
R3 100
U1 MOC3010
U2 MOC3010
U3 MOC3010
R4 180
R5 180
R6 180
Q4 2N5757
Q5 2N5757
Q6 2N5757
R7 1K
R8 1K
R9 1K
R10 5K 2W
C1 .01
C2 .01
J17-2
J17-1
SIMULATOR PUMP
J18-1
J18-2
PURGE PUMP
FROM LINE FILTER
J16-3 LINE
J16-2 NEUTRAL
J16-1 GROUND
J15-3
J15-2
J15-1
TO TRANSFORMER
NATIONAL PATENT
ANALYTICAL SYSTEMS, INC.
PUMP DRIVER BOARD
C
SM
ES 41220
REV
DATE: 15 JULY 88
SHEET 1 OF 1

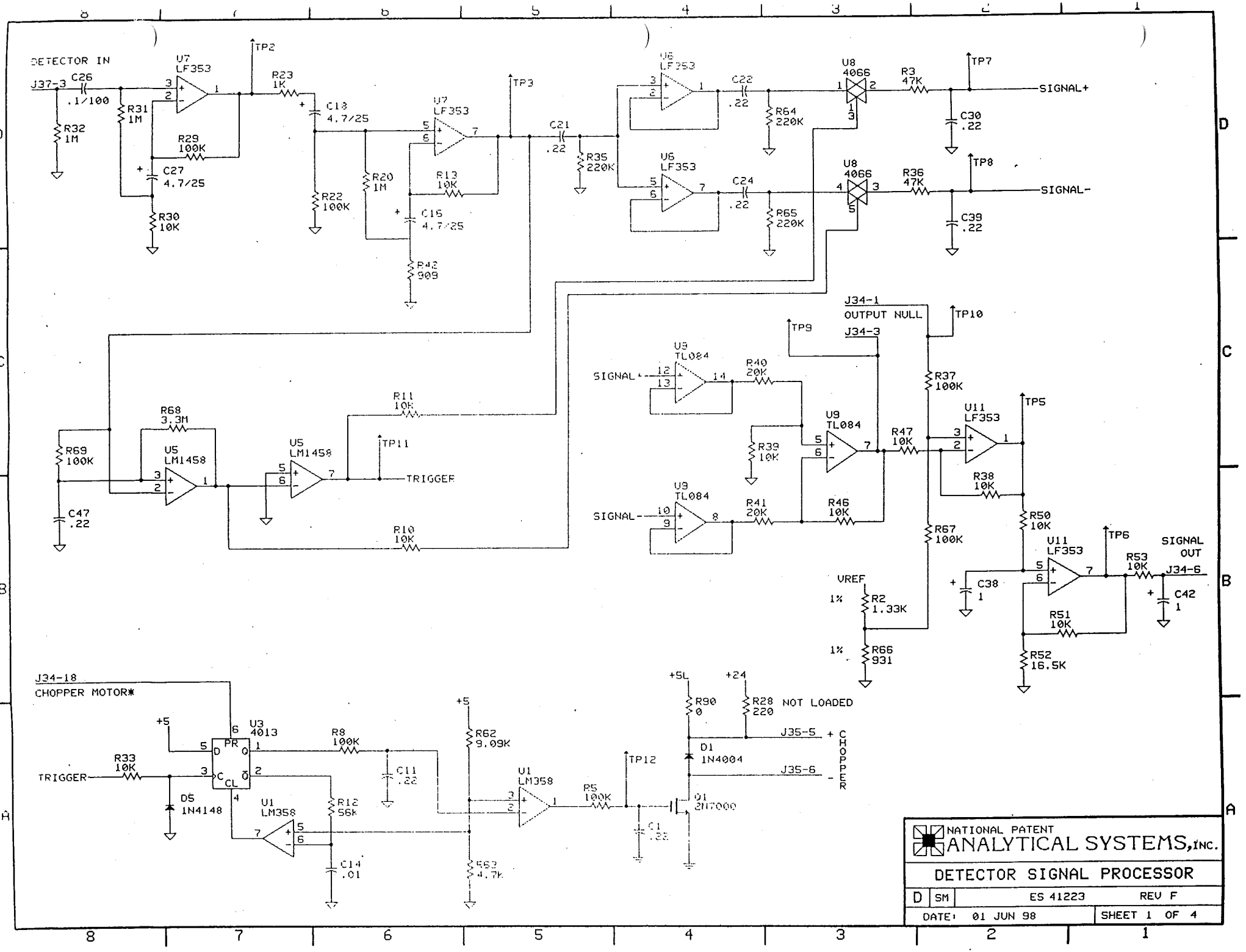
DETECTOR IN
J37-3
C26
.1/100
R32
1M
R31
1M
U7
LF353
R29
100K
C27
4.7/25
R30
10K
TP2
R23
1K
C18
4.7/25
R22
100K
R20
1M
U7
LF353
R13
10K
C15
4.7/25
R42
909
TP3
C21
.22
R35
220K
U6
LF353
C22
.22
R64
220K
U6
LF353
C24
.22
R65
220K
U8
4066
R3
47K
TP7
C30
.22
SIGNAL+
U8
4066
R36
47K
TP8
C39
.22
SIGNAL-
R68
3.3M
R69
100K
U5
LM1458
C47
.22
U5
LM1458
R11
10K
TP11
TRIGGER
R10
10K
U3
TL084
SIGNAL+
R40
20K
R39
10K
U9
TL084
U9
TL084
SIGNAL-
R41
20K
R46
10K
J34-1
OUTPUT NULL
J34-3
TP9
TP10
R37
100K
R47
10K
R67
100K
U11
LF353
TP5
R38
10K
R50
10K
U11
LF353
TP6
R53
10K
SIGNAL
OUT
J34-6
C38
1
C42
1
R51
10K
R52
16.5K
VREF
1%
R2
1.33K
1%
R66
931
J34-18
CHOPPER MOTOR*
+5
U3
4013
PR
D
Q
C
CL
R33
10K
TRIGGER
D5
1N4148
R8
100K
C11
.22
U1
LM358
R12
56k
C14
.01
+5
R62
9.09K
R63
4.7k
U1
LM358
R5
100K
TP12
C1
.22
Q1
2N7000
+5L
+24
R90
0
R28
220
NOT LOADED
D1
1N4004
J35-5
J35-6
+ CHOPPER -
NATIONAL PATENT
ANALYTICAL SYSTEMS, INC.
DETECTOR SIGNAL PROCESSOR
D
SM
ES 41223
REV F
DATE: 01 JUN 98
SHEET 1 OF 4

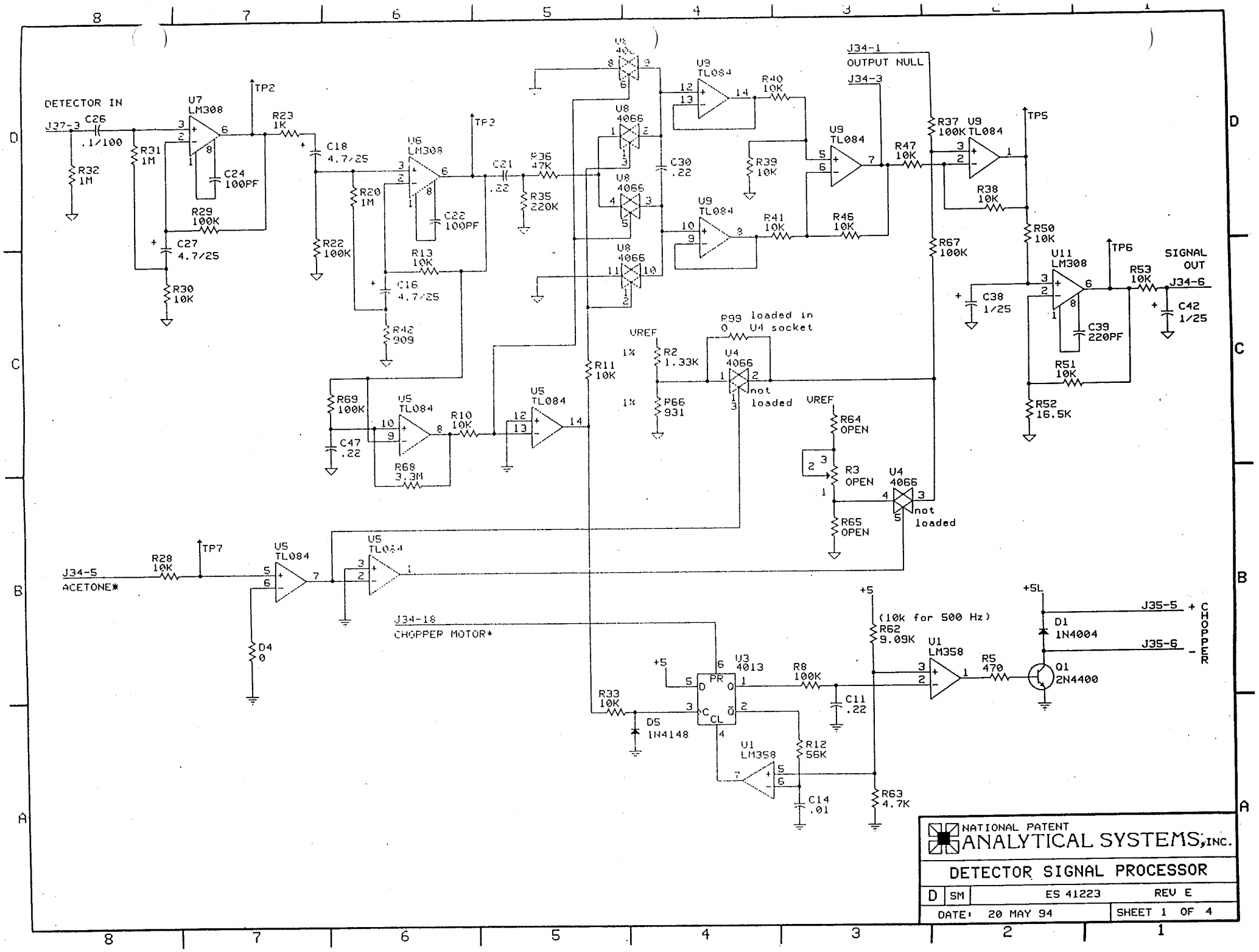
DETECTOR IN
J37-3
C26
.1/100
R32
1M
R31
1M
U7
LM308
C24
100PF
R29
100K
C27
4.7/25
R30
10K
TP2
R23
1K
C18
4.7/25
R22
100K
U6
LM308
R20
1M
C22
100PF
R13
10K
C16
4.7/25
R42
909
C21
.22
R36
47K
R35
220K
U8
4066
C30
.22
U9
TL084
R40
10K
R39
10K
R41
10K
R46
10K
R47
10K
J34-1
OUTPUT NULL
J34-3
R37
100K
R38
10K
R67
100K
TP5
R50
10K
U11
LM308
TP6
R53
10K
SIGNAL
OUT
J34-6
C38
1/25
C39
220PF
C42
1/25
R51
10K
R52
16.5K
R99
0
U4 socket
loaded in
VREF
R2
1.33K
1%
P66
931
U4
4066
not
loaded
R11
10K
R69
100K
C47
.22
U5
TL084
R10
10K
R68
3.3M
R64
OPEN
R3
OPEN
R65
OPEN
J34-5
ACETONE*
R28
10K
TP7
D4
0
J34-18
CHOPPER MOTOR*
U3
4013
PR
CL
R33
10K
D5
1N4148
R8
100K
C11
.22
R12
56K
C14
.01
R62
9.09K
(10K for 500 Hz)
R63
4.7K
U1
LM358
R5
470
Q1
2N4400
D1
1N4004
+5
+5L
J35-5
J35-6
CHOPPER
NATIONAL PATENT
ANALYTICAL SYSTEMS, INC.
DETECTOR SIGNAL PROCESSOR
D
SM
ES 41223
REV E
DATE: 20 MAY 94
SHEET 1 OF 4

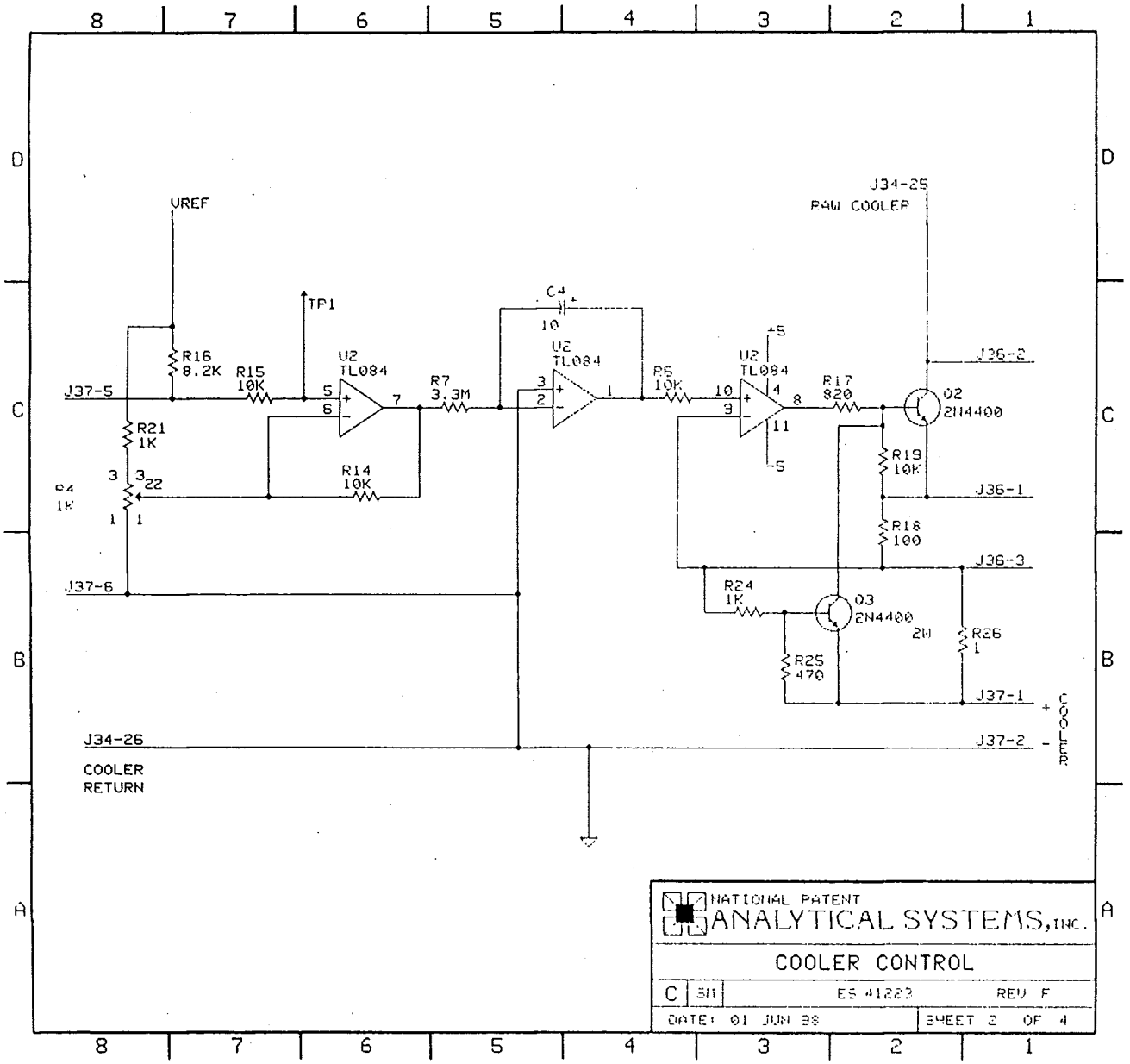
VREF
TP1
J34-25
RAW COOLER
C4
10
U2
TL084
U2
TL084
U2
TL084
+5
-5
R16
8.2K
R15
10K
R7
3.3M
R6
10K
R17
820
Q2
2N4400
J36-2
J37-5
R21
1K
R14
10K
R4
1K
R19
10K
J36-1
R18
100
J36-3
J37-6
R24
1K
Q3
2N4400
2W
R26
1
R25
470
J37-1
+ COOLER
J34-26
J37-2
- COOLER
COOLER
RETURN
NATIONAL PATENT
ANALYTICAL SYSTEMS, INC.
COOLER CONTROL
C
311
ES 41223
REV F
DATE: 01 JUN 88
SHEET 2 OF 4

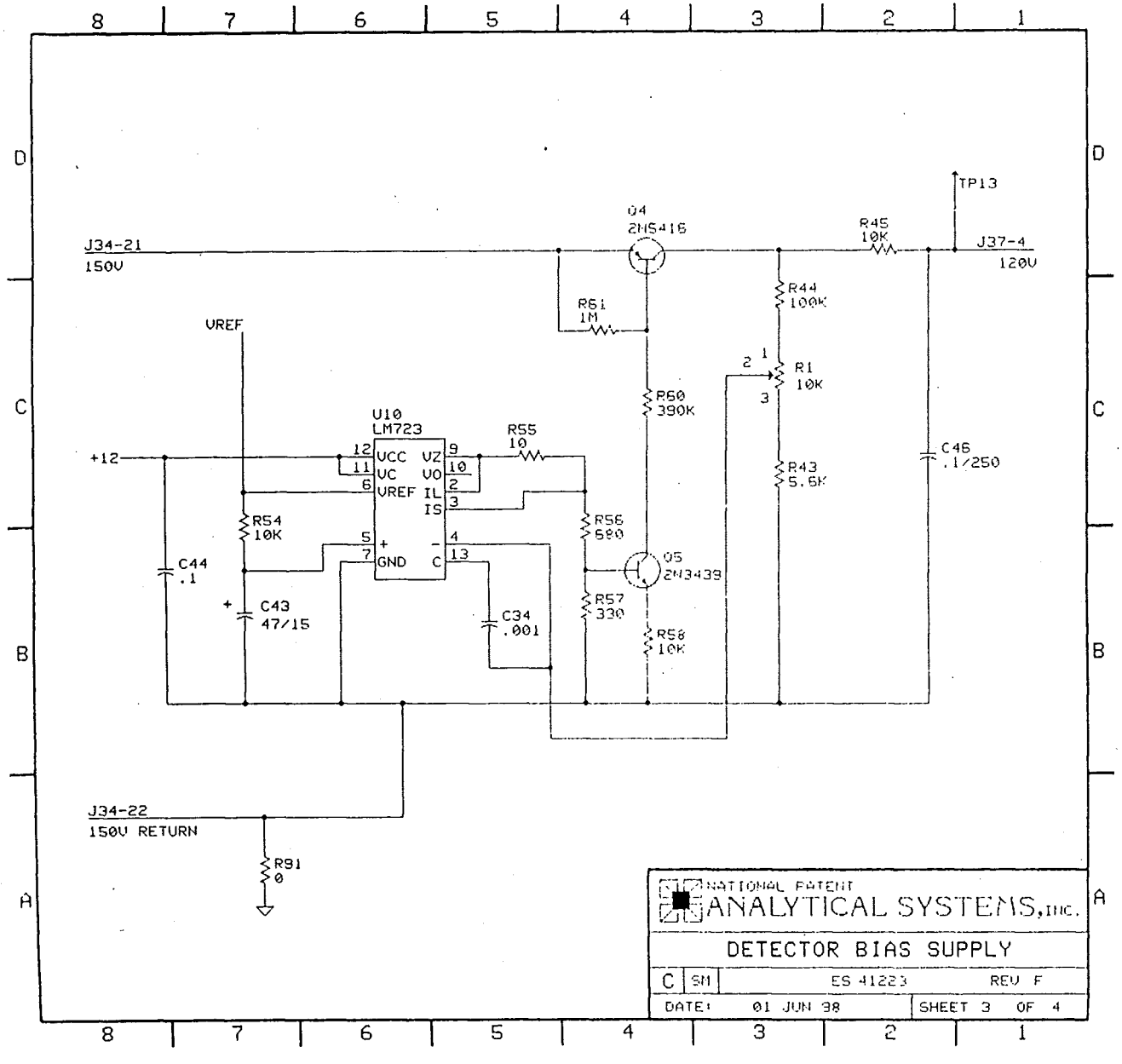
J34-21
150V
Q4
2N5416
R45
10K
TP13
J37-4
120V
R44
100K
R61
1M
VREF
R1
10K
R60
390K
U10
LM723
R55
10
+12
VCC
VZ
VC
VO
VREF
IL
IS
GND
C
C46
.1/250
R43
5.6K
R54
10K
R56
680
Q5
2N3439
C44
.1
C43
47/15
C34
.001
R57
330
R58
10K
J34-22
150V RETURN
R91
0
NATIONAL PATENT
ANALYTICAL SYSTEMS, INC.
DETECTOR BIAS SUPPLY
C
SM
ES 41223
REV F
DATE: 01 JUN 98
SHEET 3 OF 4

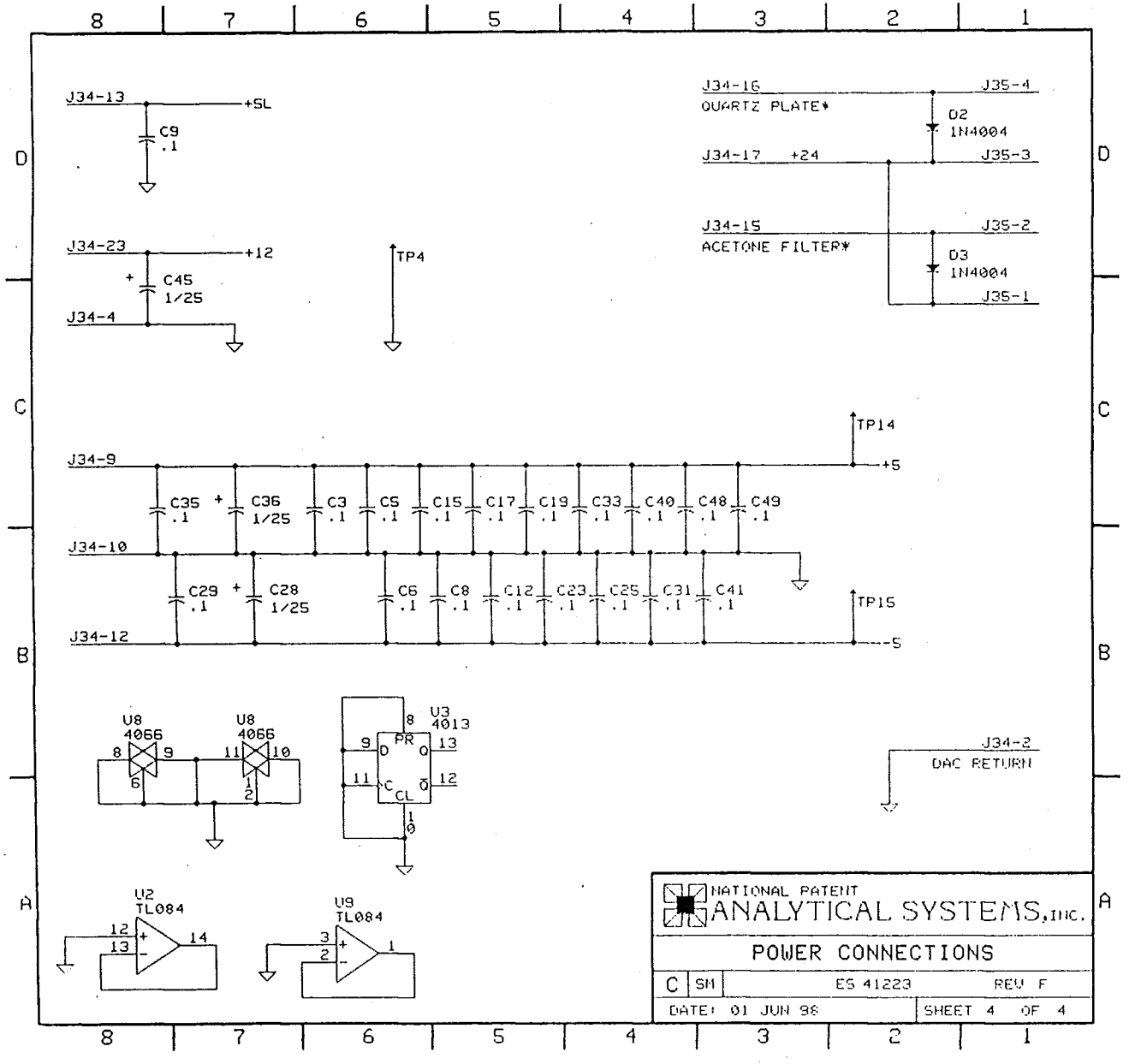
J34-13
+5L
C9
.1
J34-23
+12
C45
1/25
J34-4
TP4
J34-16
QUARTZ PLATE*
J35-4
D2
1N4004
J34-17
+24
J35-3
J34-15
ACETONE FILTER*
J35-2
D3
1N4004
J35-1
TP14
J34-9
+5
C35
.1
C36
1/25
C3
.1
C5
.1
C15
.1
C17
.1
C19
.1
C33
.1
C40
.1
C48
.1
C49
.1
J34-10
C29
.1
C28
1/25
C6
.1
C8
.1
C12
.1
C23
.1
C25
.1
C31
.1
C41
.1
TP15
J34-12
-5
U8
4066
U8
4066
U3
4013
PR
D
C
CL
Q
Q̄
J34-2
DAC RETURN
U2
TL084
U9
TL084
NATIONAL PATENT
ANALYTICAL SYSTEMS, INC.
POWER CONNECTIONS
C
SM
ES 41223
REV F
DATE: 01 JUN 98
SHEET 4 OF 4

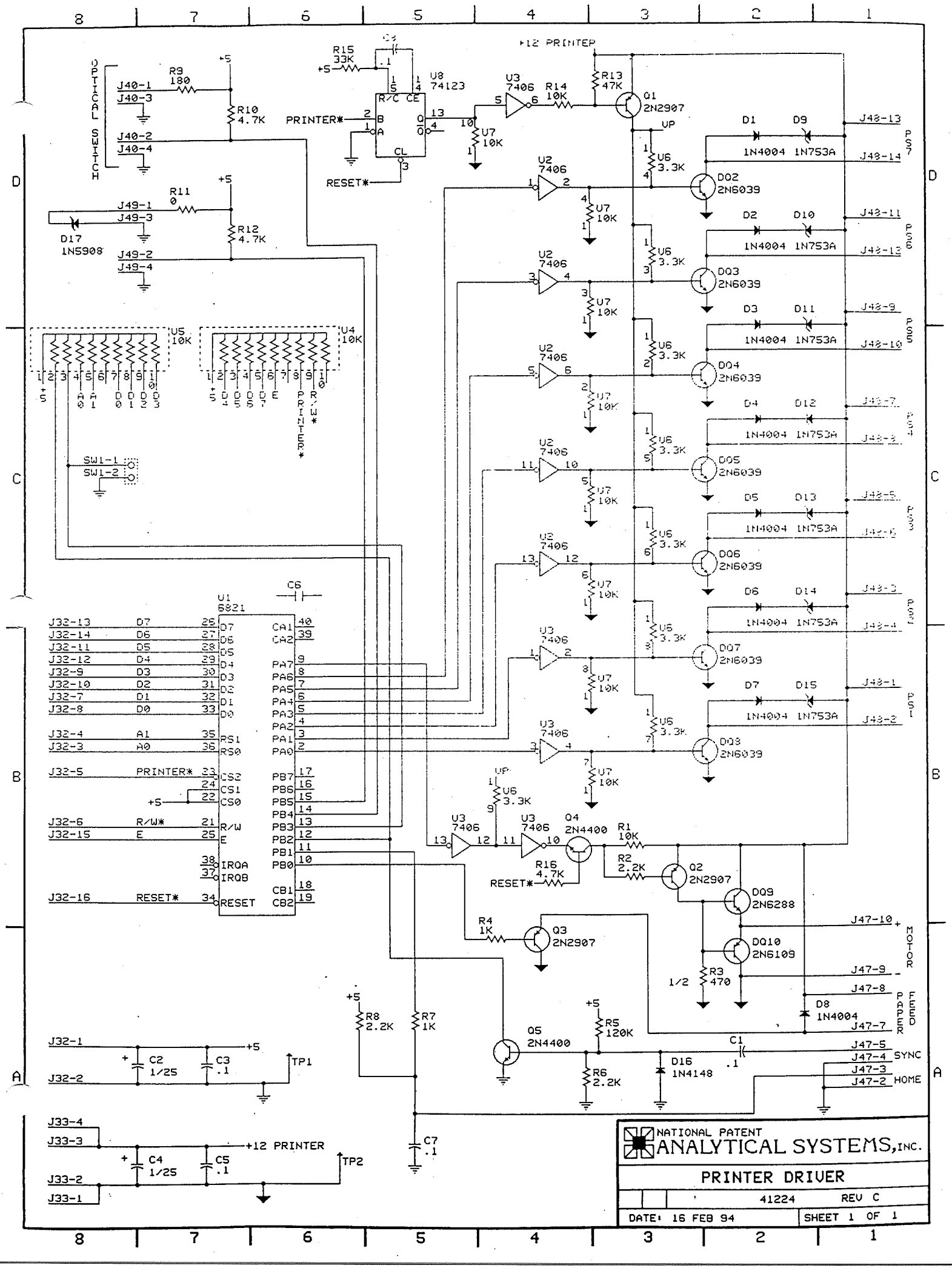
OPTICAL SWITCH
J40-1
J40-3
J40-2
J40-4
R9 180
R10 4.7K
+5
J49-1
J49-3
D17 1N5908
J49-2
J49-4
R11 0
R12 4.7K
U5 10K
U4 10K
SW1-1
SW1-2
R15 33K
C9 .1
U8 74123
R/C
CE
CL
PRINTER*
RESET*
+12 PRINTER
U3 7406
R14 10K
R13 47K
Q1 2N2907
U7 10K
U2 7406
U6 3.3K
VP
D1 D9 D2 D10 D3 D11 D4 D12 D5 D13 D6 D14 D7 D15
1N4004 1N753A
DQ2 2N6039
DQ3 2N6039
DQ4 2N6039
DQ5 2N6039
DQ6 2N6039
DQ7 2N6039
DQ8 2N6039
J48-13
J48-14
J48-11
J48-12
J48-9
J48-10
J48-7
J48-8
J48-5
J48-6
J48-3
J48-4
J48-1
J48-2
U1 6821
C6
J32-13 D7
J32-14 D6
J32-11 D5
J32-12 D4
J32-9 D3
J32-10 D2
J32-7 D1
J32-8 D0
J32-4 A1
J32-3 A0
J32-5 PRINTER*
J32-6 R/W*
J32-15 E
J32-16 RESET*
CA1
CA2
PA7
PA6
PA5
PA4
PA3
PA2
PA1
PA0
PB7
PB6
PB5
PB4
PB3
PB2
PB1
PB0
CB1
CB2
CS2
CS1
CS0
IRQA
IRQB
RS1
RS0
Q4 2N4400
R1 10K
R2 2.2K
Q2 2N2907
R16 4.7K
DQ9 2N6288
DQ10 2N6109
R3 470
1/2
R4 1K
Q3 2N2907
J47-10
J47-9
J47-8
J47-7
MOTOR
PAPER FEED
D8 1N4004
R8 2.2K
R7 1K
Q5 2N4400
R5 120K
R6 2.2K
D16 1N4148
C1 .1
J47-5
J47-4
J47-3
J47-2
SYNC
HOME
J32-1
J32-2
C2 1/25
C3 .1
TP1
J33-4
J33-3
J33-2
J33-1
C4 1/25
C5 .1
TP2
C7 .1
NATIONAL PATENT
ANALYTICAL SYSTEMS, INC.
PRINTER DRIVER
41224
REV C
DATE: 16 FEB 94
SHEET 1 OF 1

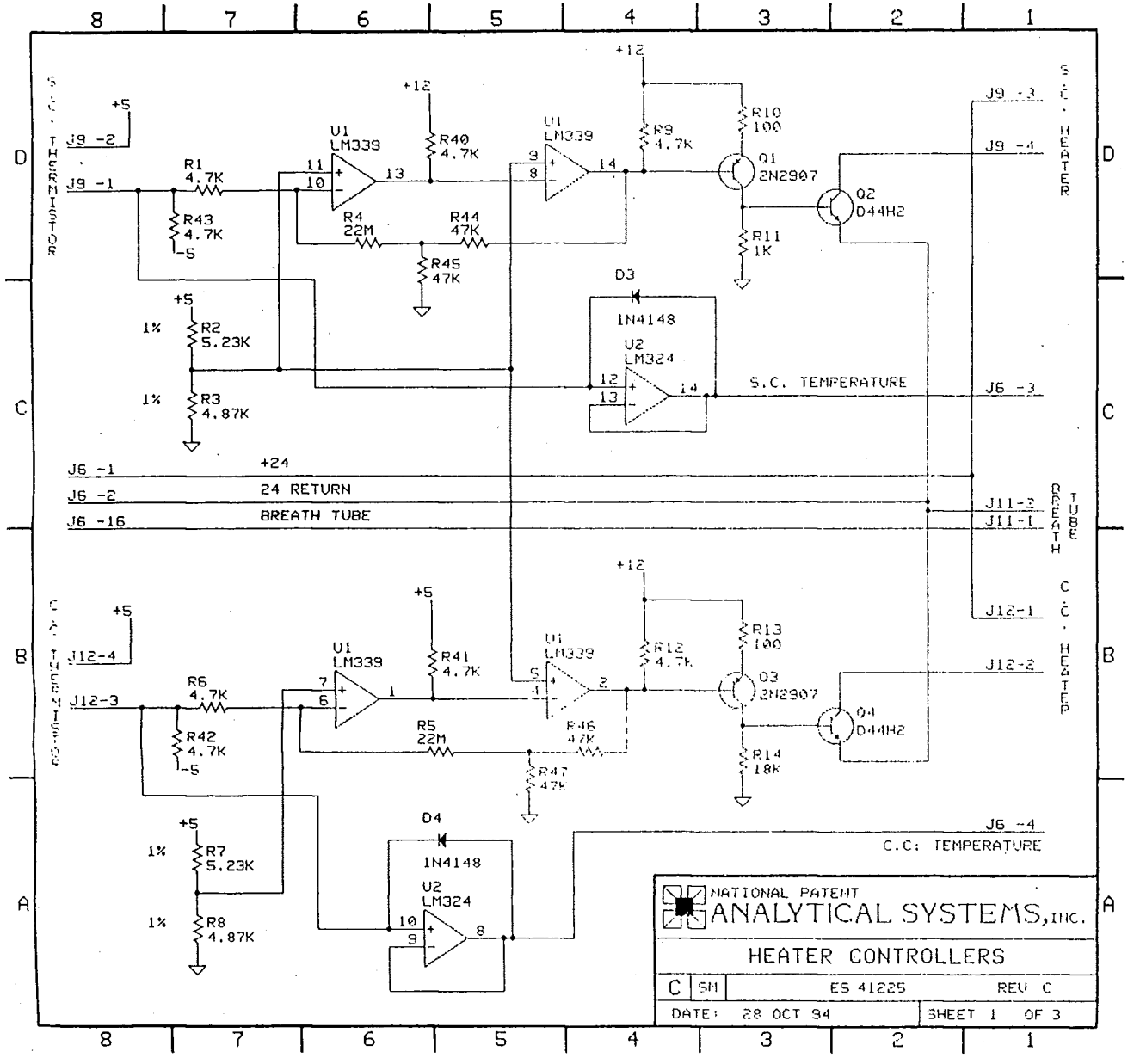
S.C. THERMISTOR
J9 -2
J9 -1
+5
R1 4.7K
R43 4.7K
-5
U1 LM339
R40 4.7K
+12
R4 22M
R44 47K
R45 47K
U1 LM339
R9 4.7K
R10 100
Q1 2N2907
R11 1K
Q2 D44H2
J9 -3
J9 -4
S.C. HEATER
D3
1N4148
U2 LM324
1%
R2 5.23K
R3 4.87K
S.C. TEMPERATURE
J6 -3
J6 -1
+24
J6 -2
24 RETURN
J6 -16
BREATH TUBE
J11-2
J11-1
BREATH TUBE
C.C. THERMISTOR
J12-4
J12-3
R6 4.7K
R42 4.7K
R41 4.7K
R5 22M
R46 47K
R47 47K
R12 4.7K
R13 100
Q3 2N2907
R14 18K
Q4 D44H2
J12-1
J12-2
C.C. HEATER
D4
R7 5.23K
R8 4.87K
J6 -4
C.C. TEMPERATURE
NATIONAL PATENT
ANALYTICAL SYSTEMS, INC.
HEATER CONTROLLERS
C
SM
ES 41225
REV C
DATE: 28 OCT 94
SHEET 1 OF 3

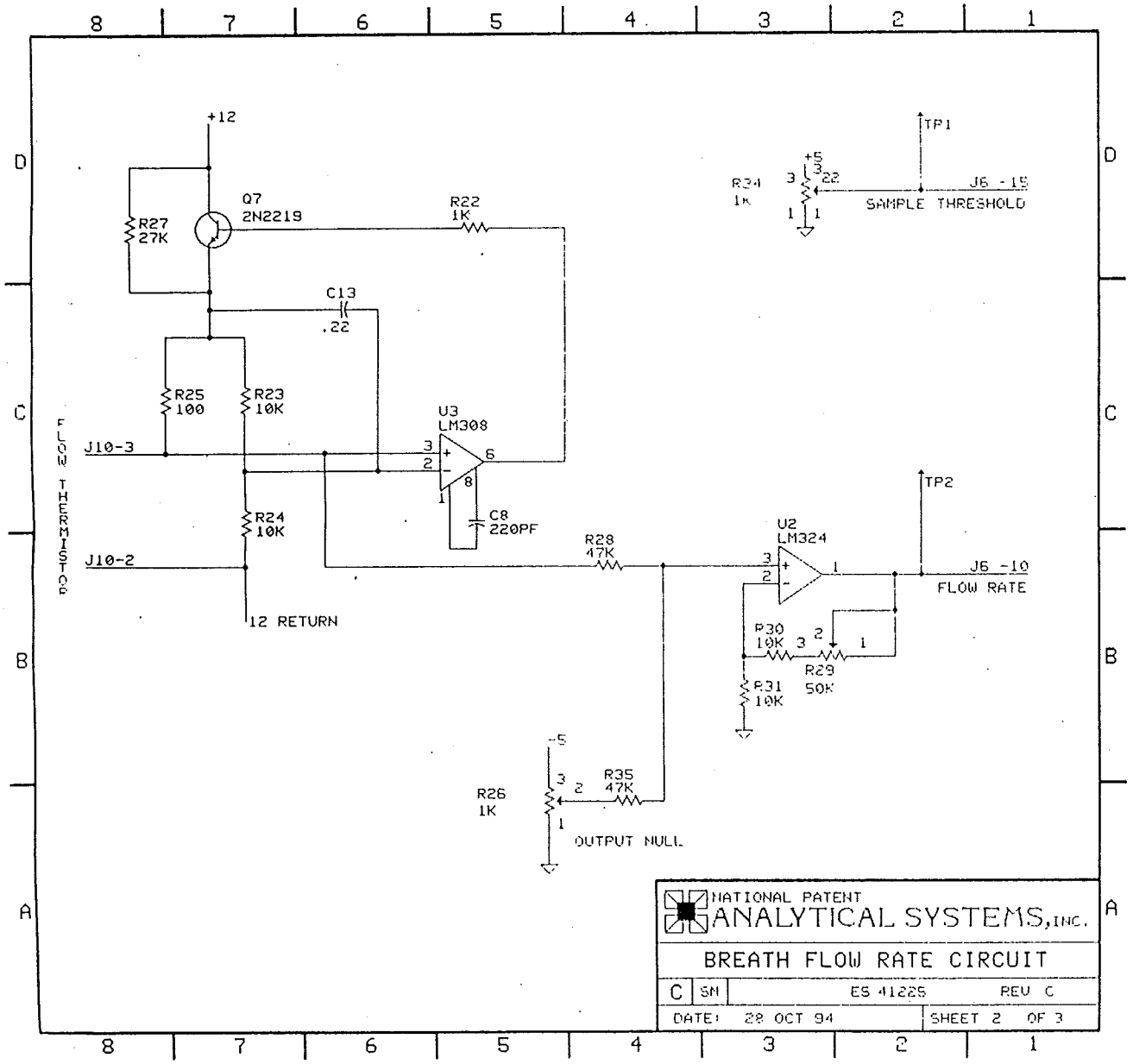
+12
Q7
2N2219
R27
27K
R22
1K
C13
.22
R25
100
R23
10K
U3
LM308
J10-3
J10-2
R24
10K
C8
220PF
12 RETURN
FLOW THERMISTOR
R28
47K
U2
LM324
TP1
TP2
R34
1K
+5
22
J6 -15
SAMPLE THRESHOLD
J6 -10
FLOW RATE
R30
10K
R29
50K
R31
10K
-5
R26
1K
R35
47K
OUTPUT NULL
NATIONAL PATENT
ANALYTICAL SYSTEMS, INC.
BREATH FLOW RATE CIRCUIT
C
SN
ES 41225
REV C
DATE: 28 OCT 94
SHEET 2 OF 3

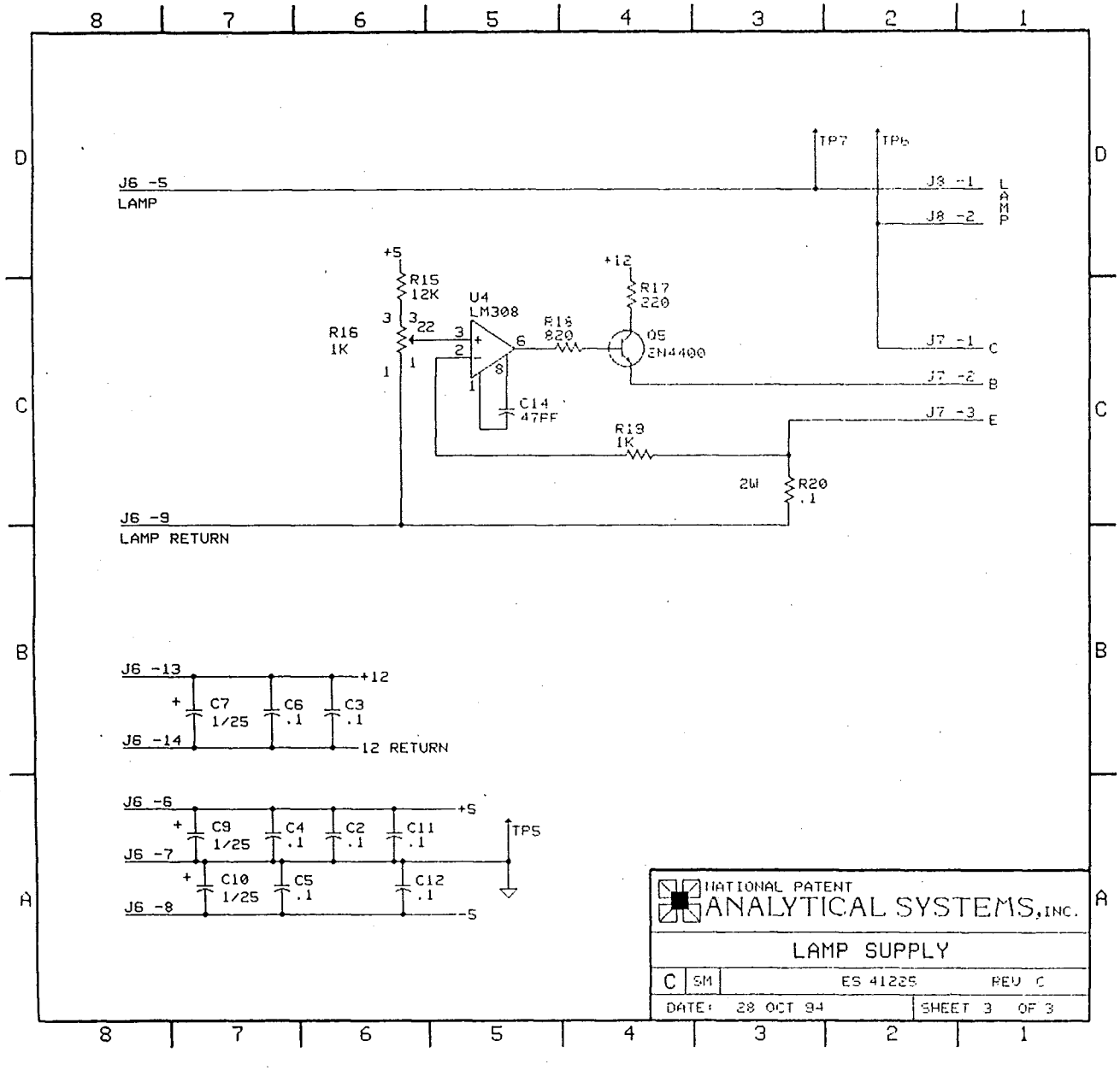
J6 -5
LAMP
TP7
TP6
J8 -1
J8 -2
LAMP
+5
R15
12K
U4
LM308
R16
1K
R18
820
+12
R17
220
Q5
2N4400
J7 -1
C
J7 -2
B
J7 -3
E
C14
47PF
R19
1K
2W
R20
.1
J6 -9
LAMP RETURN
J6 -13
+12
C7
1/25
C6
.1
C3
.1
J6 -14
12 RETURN
J6 -6
+5
C9
1/25
C4
.1
C2
.1
C11
.1
TP5
J6 -7
C10
1/25
C5
.1
C12
.1
J6 -8
-5
NATIONAL PATENT
ANALYTICAL SYSTEMS, INC.
LAMP SUPPLY
C
SM
ES 41225
REV C
DATE: 28 OCT 94
SHEET 3 OF 3

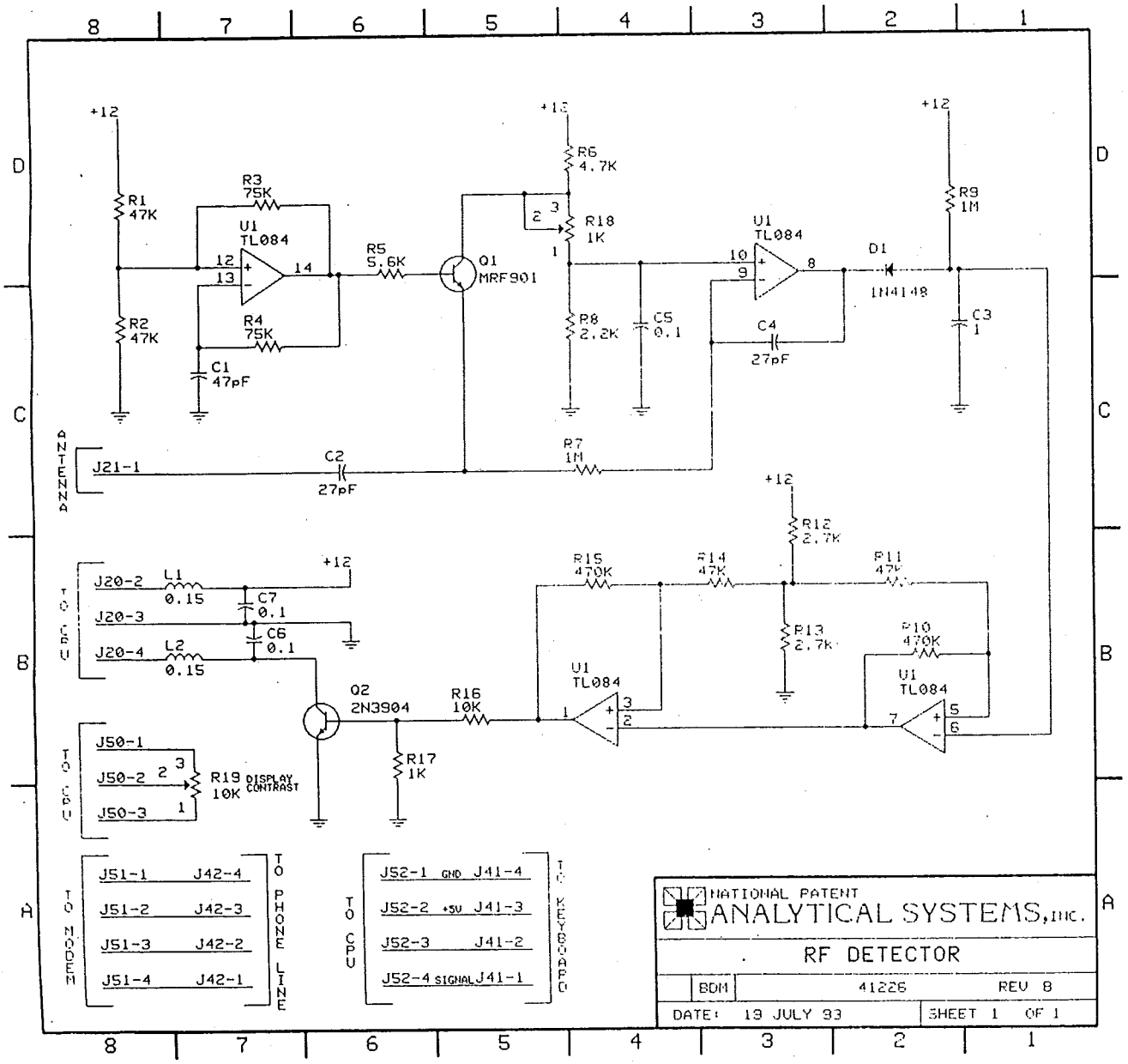
+12
R1 47K
R2 47K
R3 75K
R4 75K
U1 TL084
C1 47pF
R5 5.6K
Q1 MRF901
R6 4.7K
R18 1K
R8 2.2K
C5 0.1
C4 27pF
D1 1N4148
R9 1M
C3 1
ANTENNA
J21-1
C2 27pF
R7 1M
R12 2.7K
R15 470K
R14 47K
R11 47K
R13 2.7K
R10 470K
TO CPU
J20-2
J20-3
J20-4
L1 0.15
L2 0.15
C7 0.1
C6 0.1
Q2 2N3904
R16 10K
R17 1K
J50-1
J50-2
J50-3
R19 10K DISPLAY CONTRAST
TO MODEM
J51-1 J42-4
J51-2 J42-3
J51-3 J42-2
J51-4 J42-1
TO PHONE LINE
TO CPU
J52-1 GND J41-4
J52-2 +5V J41-3
J52-3 J41-2
J52-4 SIGNAL J41-1
TO KEYBOARD
NATIONAL PATENT
ANALYTICAL SYSTEMS, INC.
RF DETECTOR
BOM
41226
REV B
DATE: 13 JULY 93
SHEET 1 OF 1