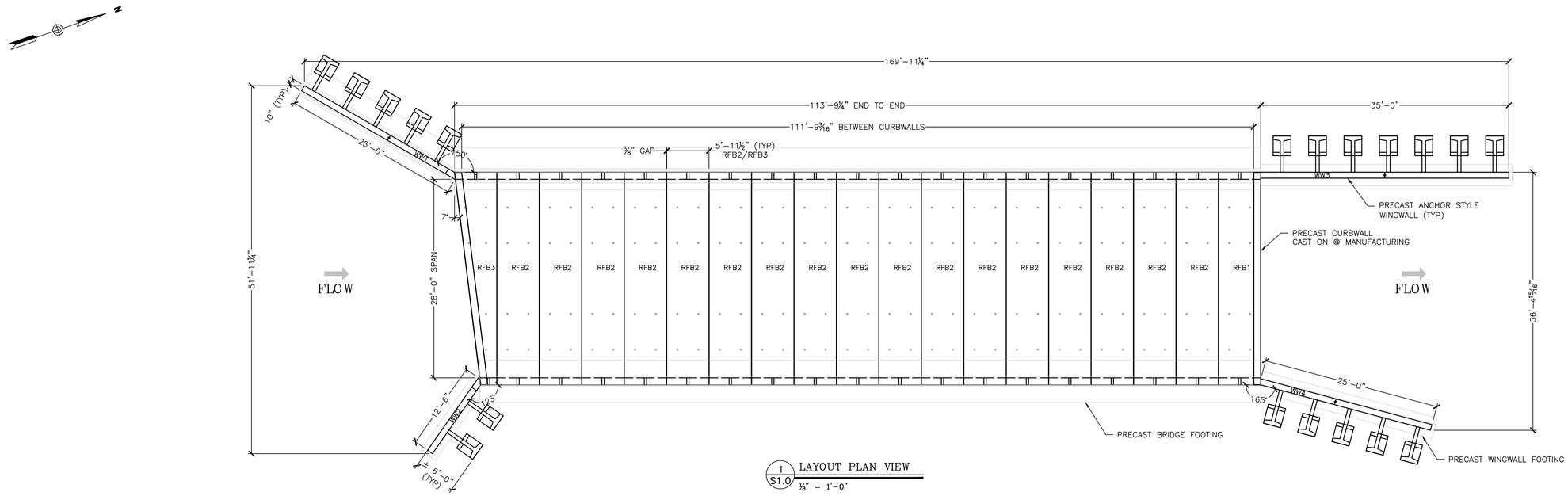

1 / S1.0 LAYOUT PLAN VIEW
⅛" = 1'-0"

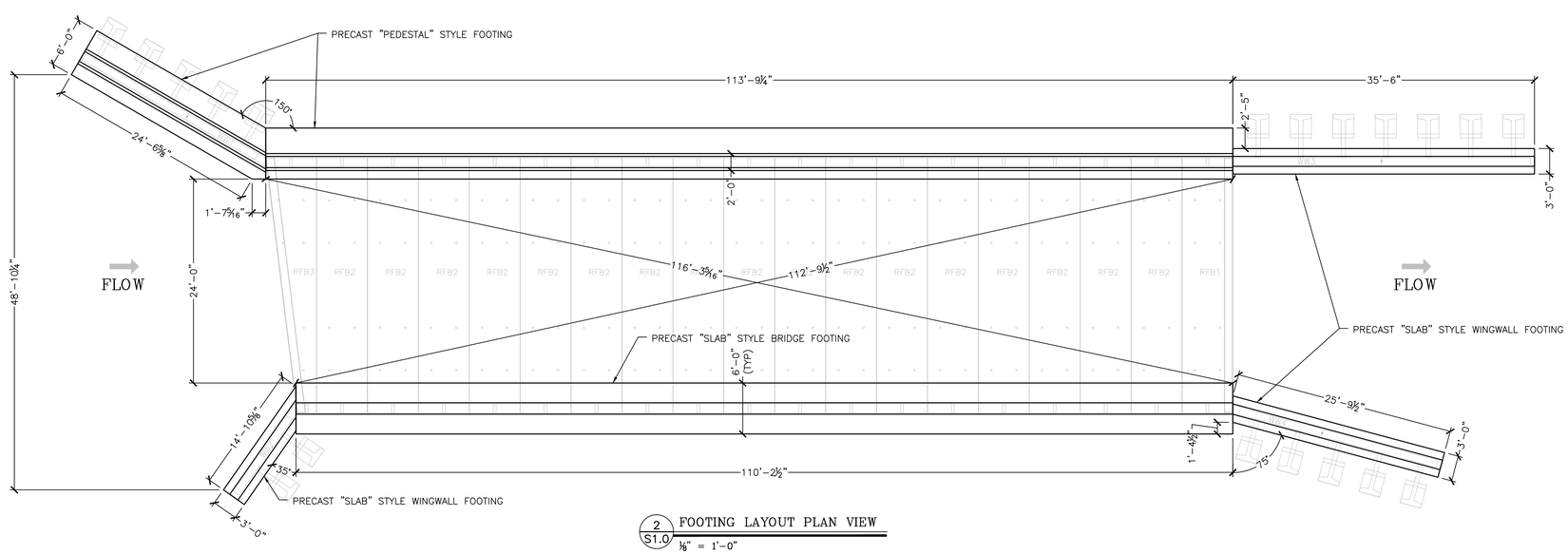

2 / S1.0 FOOTING LAYOUT PLAN VIEW
⅛" = 1'-0"

No.	Date	Revision	By
1	XX/XX/XXXX	XX	XXX

MICHIE CORPORATION, INC.
173 BUXTON INDUSTRIAL DRIVE-PO BOX 870
HENNIKER, NH 03242
PHONE: 603-428-3218
FAX: 603-428-7426

VT Route 73 - Bridge Improvement Project
Rochester, VT

28'x10' Arch Bridge w/ Wingwalls and Footings

Project No. 4653

Date: 12/30/2013

Designed by: xxx

Drawn by: CFP

Checked by: XXX

Scale: AS SHOWN

Prepared for:
WM Schultz Construction
PO Box 2620
Ballston Spa, NY 12020

DWG NO.
S1.0

S:\PROJECTS\Schultz Construction\Rochester, VT - Rt 13\AC 28' concept.dwg, 1/7/2014 10:18:27 AM,
DWG To PDF.pc3

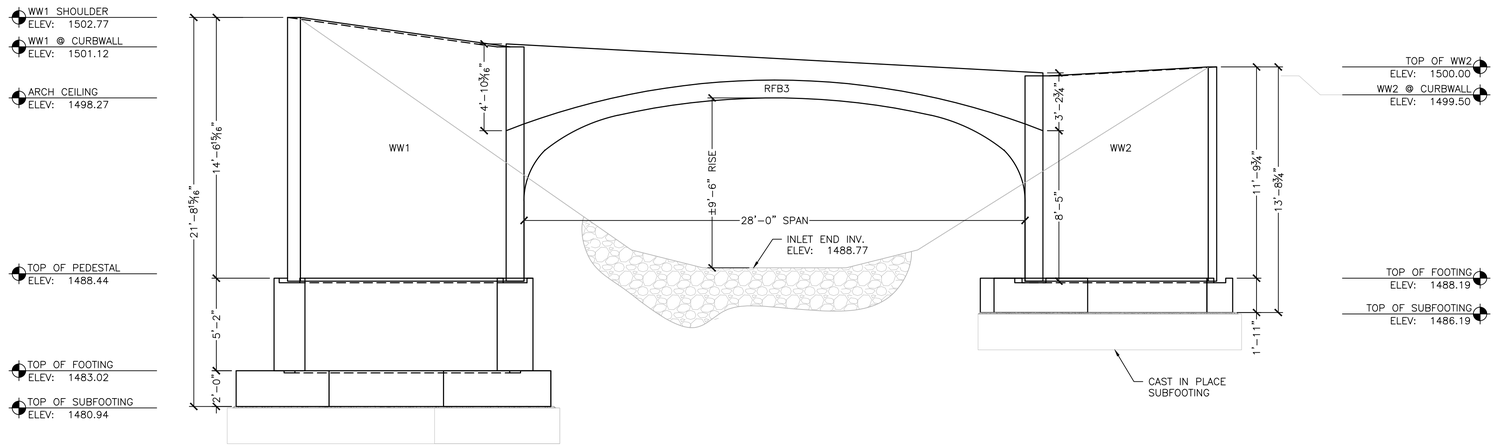

1 S2.0 INLET END ELEVATION
¼" = 1'-0"

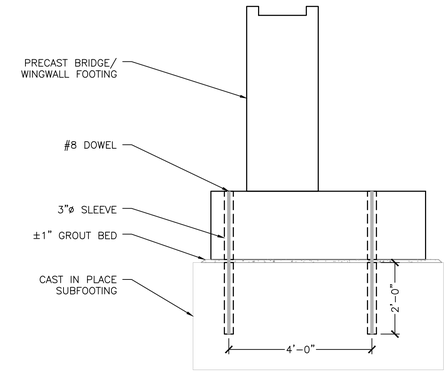

3 S2.0 SUBFOOTING/FOOTING DETAIL
½" = 1'-0"

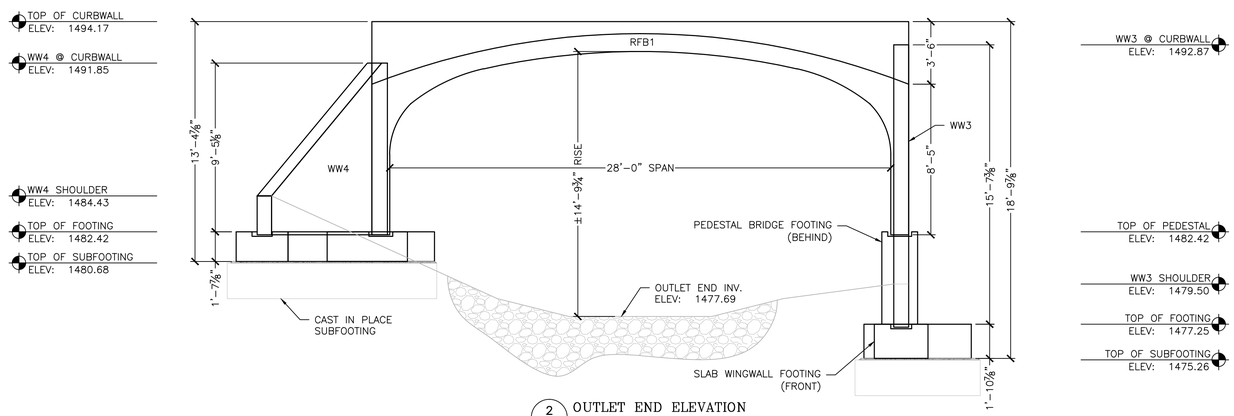

2 S2.0 OUTLET END ELEVATION
¼" = 1'-0"

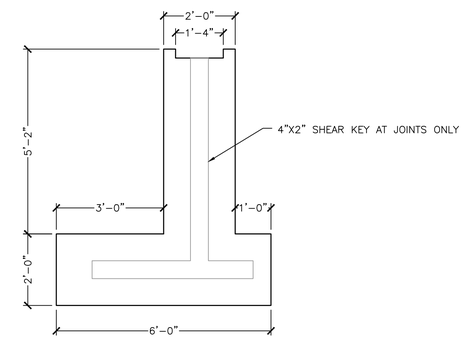

4 S2.0 PEDESTAL FOOTING SECTION
½" = 1'-0"

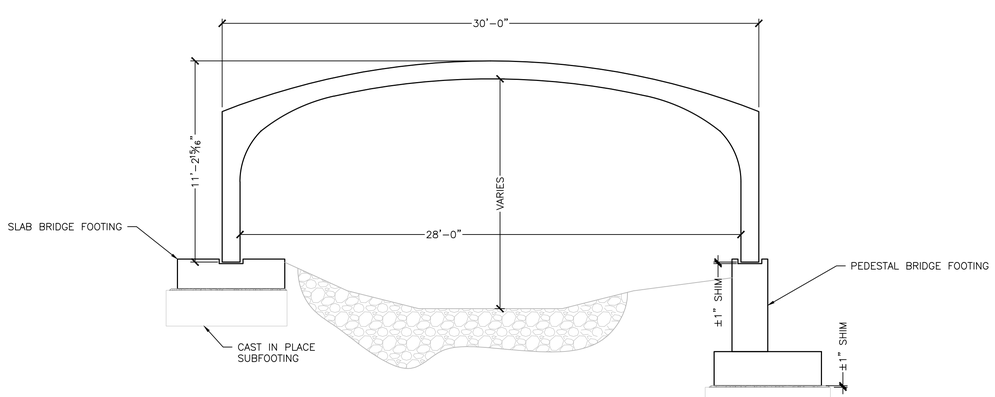

6 S2.0 (TYP) BRIDGE SECTION
¼" = 1'-0"

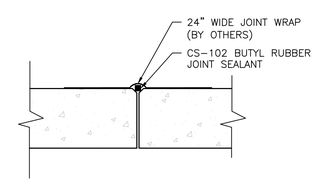

ELEVATION

8 S2.0 ARCH BRIDGE JOINT DETAIL
1" = 1'-0"

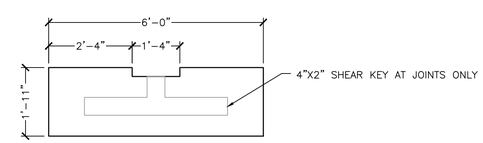

5 S2.0 SLAB FOOTING SECTION
½" = 1'-0"

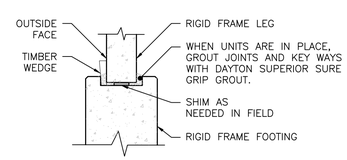

7 S2.0 UNIT SETTING DETAILS
½" = 1'-0"

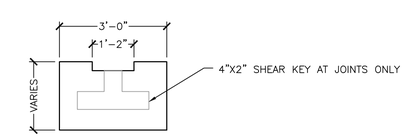

9 S2.0 WINGWALL SLAB FOOTING SECTION
½" = 1'-0"

No.	Date	Revision	By
1	XX/XX/XXXX	XX	XXX

MICHIE CORPORATION, INC.
173 BUXTON INDUSTRIAL DRIVE-PO BOX 870
HENNIKER, NH 03242
PHONE: 603-428-3218
FAX: 603-428-7426

VT Route 73 - Bridge Improvement Project
Rochester, VT
28'x10' Arch Bridge w/ Wingwalls and Footings

Project No. 4653
Date: 12/30/2013
Designed by: xxx
Drawn by: CFP
Checked by: XXX
Scale: AS SHOWN

Prepared for:
WM Schultz Construction
PO Box 2620
Ballston Spa, NY 12020

DWG NO.
S2.0

S:\PROJECTS\Schultz Construction\Rochester, VT - Rt 13\AC 28' concept.dwg, 1/7/2014 10:18 AM

S:\PROJECTS\Schultz Construction\Rochester, VT - Rt 13\AC 28' concept.dwg, 1/7/2014 10:18:28 AM,
DWG To PDF.pc3

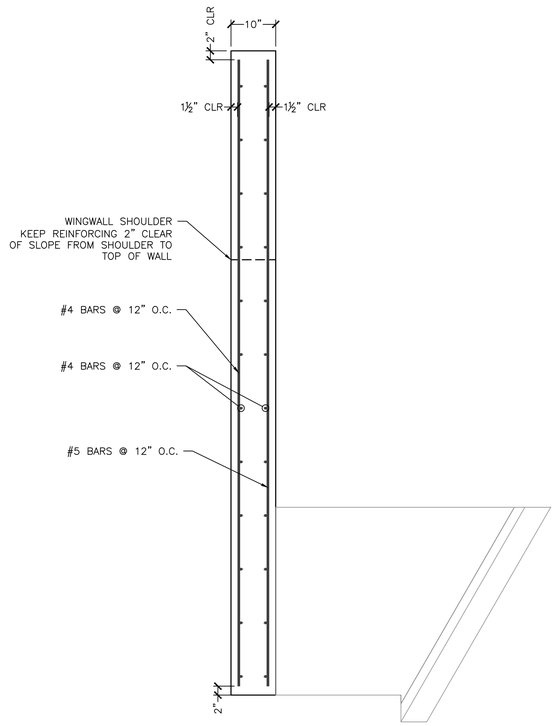

1 / S5.0 WINGWALL REINFORCING (TYP)
¾" = 1'-0"

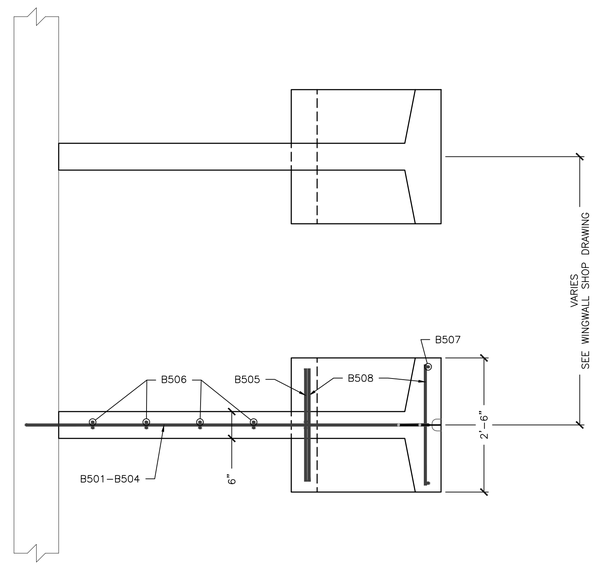

NOTE: REINFORCING SHOWN REPRESENTS "E" ANCHOR
OTHER ANCHOR REINFORCING SIMILAR

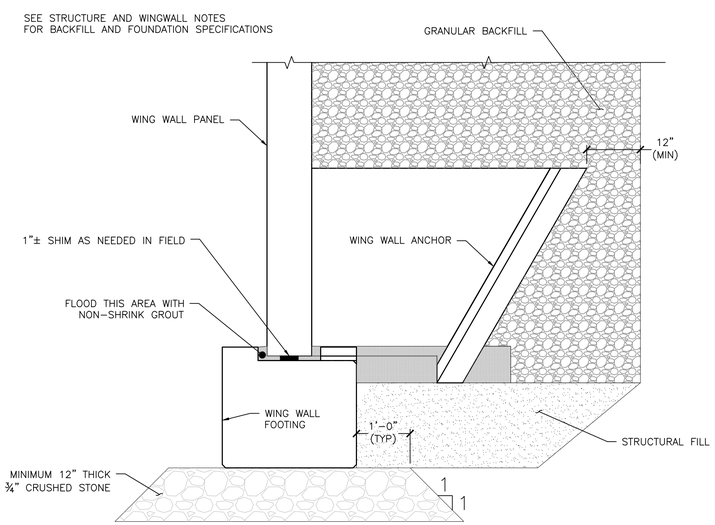

2 / S5.0 FOOTING TO WW
ATTACHMENT DETAIL
¾" = 1'-0"

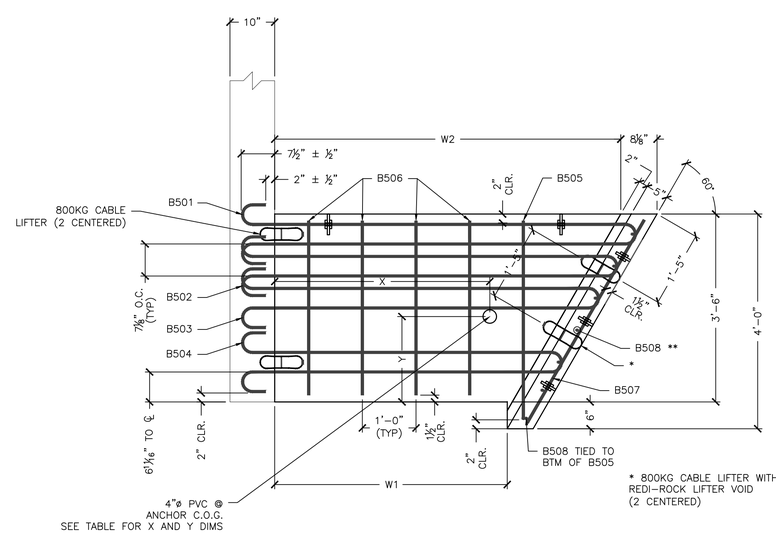

3 / S5.0 ANCHOR DETAIL
¾" = 1'-0"

* 800KG CABLE LIFTER WITH
REDI–ROCK LIFTER VOID
(2 CENTERED)

** PLACE (1) B508 THROUGH EACH HOOP BARS,
(1) CENTERED BETWEEN HOOP BARS 503 & 504, AND
(2) BELOW B504 HOOP BAR W/ BOTTOM B508
2" CLEAR FROM BOTTOM (7 TOTAL)

ANCHOR TYPE "B"					
CONCRETE QUANTITY				0.41 CY	
WEIGHT				1740 LB	
W1				1'-4"	
W2				3'-5⅞"	
X =	2'-2⅛"	Y=	1'-8⅜"		
BAR LIST					
MARK	QTY	SIZE	L	TYPE	LENGTH
B501	1	#5	4'-4½"	1	10'-1½"
B502	1	#5	4'-0½"	1	9'-5"
B503	1	#5	3'-8¾"	1	8'-9"
B504	1	#5	3'-0"	1	7'-4½"
B505	2	#5	3'-8½"	2	4'-7"
B506	2	#5	----	Str.	3'-3"
B507	4	#5	----	Str.	4'-4½"
B508	7	#5	----	Str.	2'-3"

ANCHOR TYPE "C"					
CONCRETE QUANTITY				0.48 CY	
WEIGHT				2010 LB	
W1				2'-4"	
W2				4'-5⅜"	
X =	2'-8¾"	Y=	1'-8½"		
BAR LIST					
MARK	QTY	SIZE	L	TYPE	LENGTH
B501	1	#5	5'-4½"	1	12'-1½"
B502	1	#5	5'-0½"	1	11'-5"
B503	1	#5	4'-8¾"	1	10'-9"
B504	1	#5	4'-0"	1	9'-4½"
B505	2	#5	3'-8½"	2	4'-7"
B506	4	#5	----	Str.	3'-3"
B507	4	#5	----	Str.	4'-4½"
B508	7	#5	----	Str.	2'-3"

ANCHOR TYPE "D"					
CONCRETE QUANTITY				0.54 CY	
WEIGHT				2285 LB	
W1				3'-4"	
W2				5'-5⅜"	
X =	3'-5⅛"	Y=	1'-8½"		
BAR LIST					
MARK	QTY	SIZE	L	TYPE	LENGTH
B501	1	#5	6'-4½"	1	14'-1½"
B502	1	#5	6'-0½"	1	13'-5"
B503	1	#5	5'-8¾"	1	12'-9"
B504	1	#5	5'-0"	1	11'-4½"
B505	2	#5	3'-8½"	2	4'-7"
B506	6	#5	----	Str.	3'-3"
B507	4	#5	----	Str.	4'-4½"
B508	7	#5	----	Str.	2'-3"

ANCHOR TYPE "E"					
CONCRETE QUANTITY				0.61 CY	
WEIGHT				2550 LB	
W1				4'-4"	
W2				6'-5⅞"	
X =	4'-0"	Y=	1'-8⅝"		
BAR LIST					
MARK	QTY	SIZE	L	TYPE	LENGTH
B501	1	#5	7'-4½"	1	16'-1½"
B502	1	#5	7'-0½"	1	15'-5"
B503	1	#5	6'-8¾"	1	14'-9"
B504	1	#5	6'-0"	1	13'-4½"
B505	2	#5	3'-8½"	2	4'-7"
B506	8	#5	----	Str.	3'-3"
B507	4	#5	----	Str.	4'-4½"
B508	7	#5	----	Str.	2'-3"

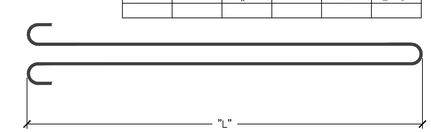

TYPE 1

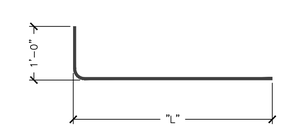

TYPE 2

No.	Date	Revision	By
1	XX/XX/XXXX	XX	XXX

MICHIE CORPORATION, INC.
173 BUXTON INDUSTRIAL DRIVE-PO BOX 870
HENNIKER, NH 03242
PHONE: 603-428-3218
FAX: 603-428-7426

VT Route 73 - Bridge Improvement Project
Rochester, VT
28'x10' Arch Bridge w/ Wingwalls and Footings

Project No. 4653
Date: 12/30/2013
Designed by: xxx
Drawn by: CFP
Checked by: XXX
Scale: AS SHOWN

Prepared for:
WM Schultz Construction
PO Box 2620
Ballston Spa, NY 12020

DWG NO.
S3.0

S:\PROJECTS\Schultz Construction\Rochester, VT - Rt 13\AC 28' concept.dwg, 1/7/2014 10:18:29 AM, DWG To PDF.pc3