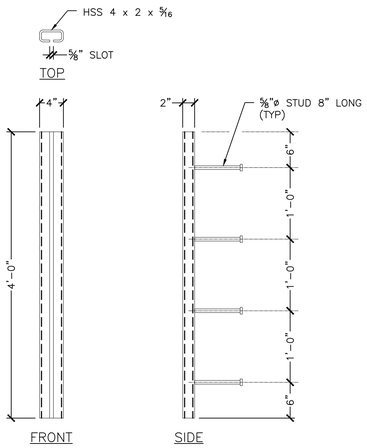

4 S1.0 STRUCTURAL TUBE DETAILS
1" = 1'-0"

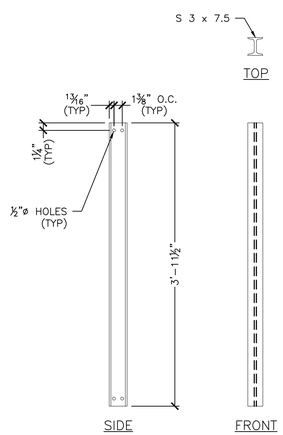

5 S1.0 I-BEAM DETAILS
1" = 1'-0"

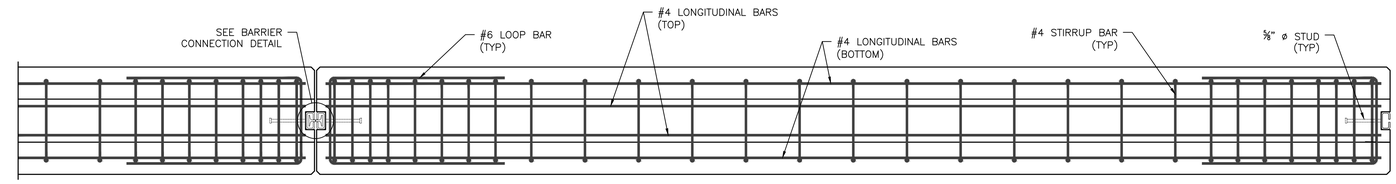

1 S1.0 PLAN
3/4" = 1'-0"

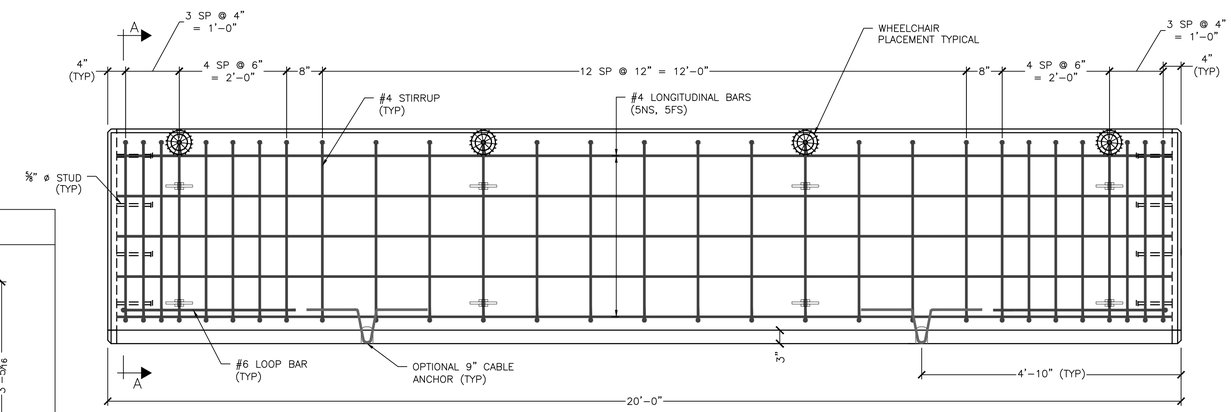

2 S1.0 STANDARD BARRIER
3/4" = 1'-0"

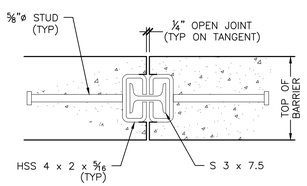

6 S1.0 BARRIER CONNECTION DETAIL
2" = 1'-0"

REINFORCING SCHEDULE

DESCRIPTION	SIZE	NO.	UNBENT LENGTH	TYPE
LONGITUDINAL (EACH FACE)	#4	10	19'-8"	
STIRRUPS	#4	29	8'-11"	
LOOP BAR	#6	2	7'-8"	

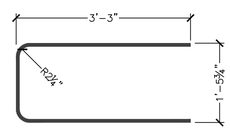

6 HOOP BAR

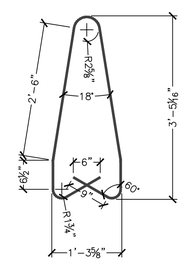

4 STIRRUP BAR

NOTE:
ALL RADII ARE TO INSIDE FACE
LENGTHS ARE TO OUTSIDE FACE

2 REQ'D
PIECE TO WEIGH: 17,890# (4.26CY)

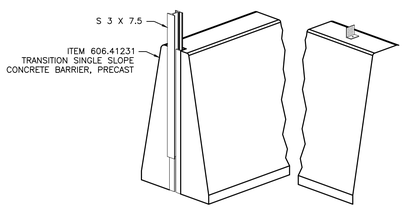

PERSPECTIVE VIEW
UNTAPERED END

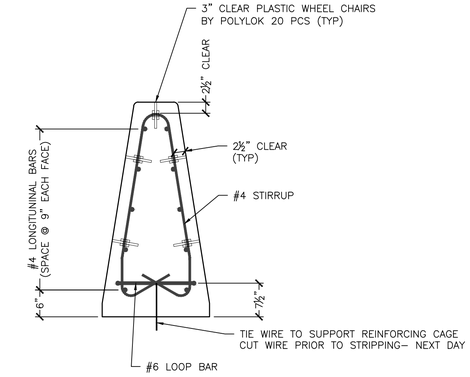

3A S1.0 SECTION A-A (REINFORCEMENT)
3/4" = 1'-0"

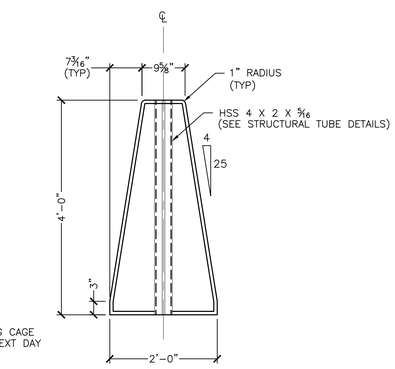

3B S1.0 END VIEW (MASONRY)
3/4" = 1'-0"

GENERAL NOTES:
1. THE CONCRETE BARRIER DETAILS, AS SHOWN ON THIS SHEET, ARE IN COMPLIANCE WITH THE REQUIREMENTS VAOT STANDARD SPECIFICATIONS FOR CONSTRUCTION SEC 540.
2. I-BEAMS AND STRUCTURAL TUBES SHALL BE GALVANIZED AFTER FABRICATION.
3. STUD WELDING SHALL BE IN ACCORDANCE WITH SUBSECTION 714.10.
4. SLOT IN STRUCTURAL TUBE SHALL BE CUT WITH MECHANICALLY GUIDED MEANS TO A SMOOTH, UNIFORM SURFACE MEETING A SURFACE ROUGHNESS OF 1000 MICROINCHES OR BETTER (ANSI B46.1).

MATERIAL NOTES:
1. THE BARRIERS SHALL BE LIGHT COLORED CLASS "A" CONCRETE HAVING A MINIMUM 28 DAY COMPRESSION STRENGTH OF 4,000 PSI. BARRIERS SHALL HAVE A SMOOTH UNIFORM SURFACE FREE OF DEFECTS AND IRREGULARITIES. CASTING DATE SHALL BE SHOWN ON BARRIER. ALL EXPOSED EDGES OF CONCRETE SHALL BE CHAMFERED 3/4", UNLESS NOTED OTHERWISE.
2. ALL REINFORCING STEEL SHALL BE LEVEL II (DUAL COATED OR STAINLESS CLAD). REINFORCEMENT SHOWN IS THE MINIMUM REQUIRED.
3. EACH BARRIER UNIT SHALL INCLUDE ONE S 3x7.5 AS SHOWN ON THIS PLAN SHEET.

No.	Date	Revision	By
1	XX/XX/XXXX	XX	XXX

MICHIE CORPORATION, INC.
173 BUXTON INDUSTRIAL DRIVE-PO BOX 870
HENNIKER, NH 03242
PHONE: 603-428-3218
FAX: 603-428-7426

VAOT Proj.# ER STP 0162 (19) - VT Rt 73 Bridge 13
Rochester, VT
20' Single Slope Median Barrier - Item# 621.45

Scale: AS SHOWN
Checked by: XXX
Drawn by: CFP
Designed by:
Project No. 4653
Date: 5/20/2014

Prepared for:
WM Schultz Const, Inc.
PO Box 2620
Ballston Spa, NY 12020

DWG NO.
S1.0

X:\PROJECTS\SCHULTZ CONSTRUCTION\ROCHESTER, VT - RT 73 (TRANS 19) STP 0162 (19)\DWGS\S3 BARRIER 2017 SCHULTZ 4653.DWG 5/21/2014 8:24 AM

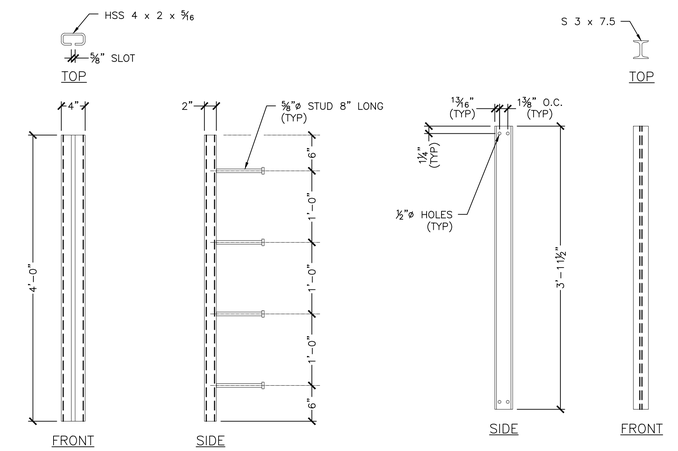

4 S2.0 STRUCTURAL TUBE DETAILS
1" = 1'-0"

5 S2.0 I-BEAM DETAILS
1" = 1'-0"

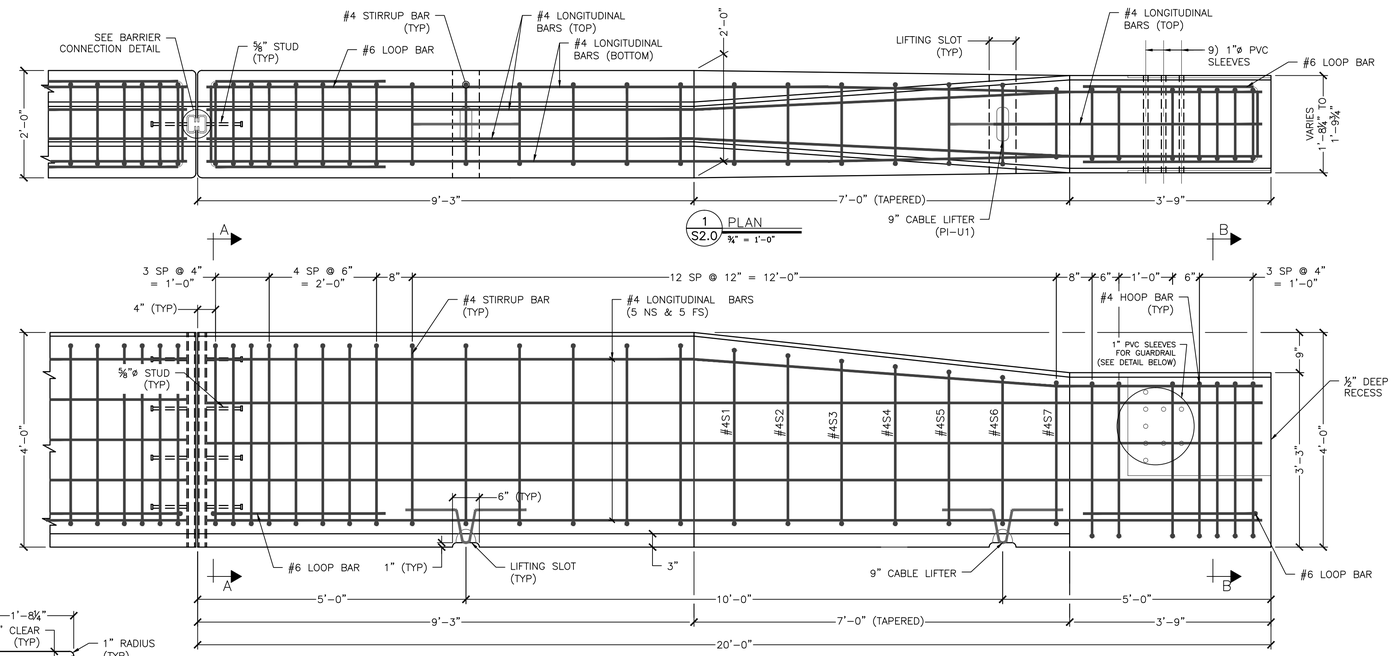

1 S2.0 PLAN
3/4" = 1'-0"

2 S2.0 ELEVATION
3/4" = 1'-0"

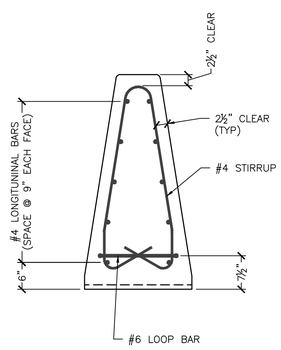

6A S2.0 SECTION A-A (REINFORCEMENT)
3/4" = 1'-0"

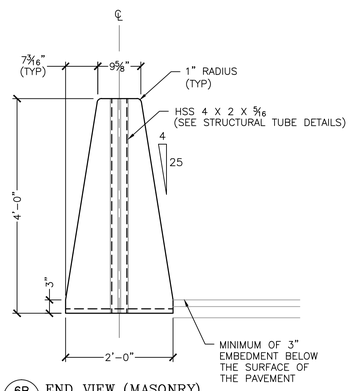

6B S2.0 END VIEW (MASONRY)
3/4" = 1'-0"

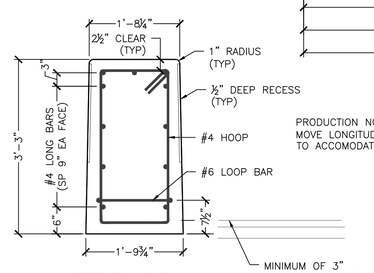

PRODUCTION NOTE:
MOVE LONGITUDINAL BARS ±1"
TO ACCOMODATE PVC SLEEVE

SECTION B-B
(MASONRY &
REINFORCEMENT)

6C S2.0
3/4" = 1'-0"

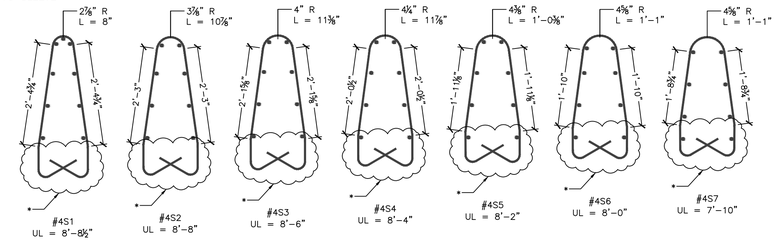

* BOTTOM SAME AS #4
STIRRUP BAR (STANDARD)

** UL = UNBENT LENGTH

3 S2.0 SPECIAL STIRRUP DETAILS
N.T.S.

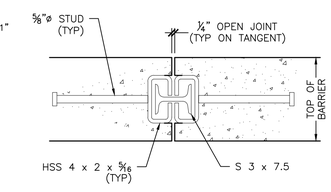

8 S2.0 BARRIER CONNECTION DETAIL
2" = 1'-0"

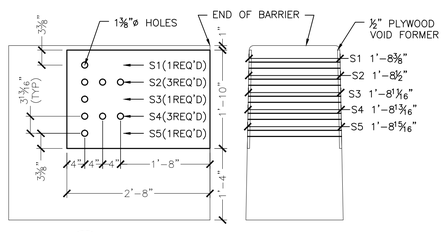

7A S2.0 SLEEVE & FORMER DETAILS
N.T.S.

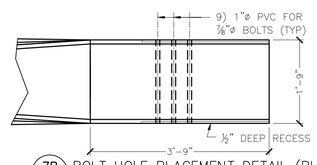

7B S2.0 BOLT HOLE PLACEMENT DETAIL (PLAN VIEW)
N.T.S.

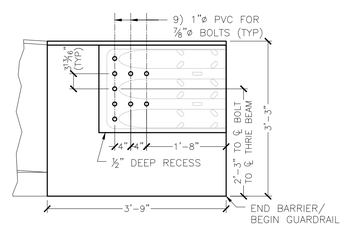

7C S2.0 BOLT HOLE PLACEMENT DETAIL (ELEVATION)
N.T.S.

CONCRETE BARRIER REINFORCING SCHEDULE

DESCRIPTION	SIZE	QTY	UNBENT LENGTH	TYPE
LONGITUDINAL	#4	10	19'-8"	
STIRRUPS	#4	14	8'-11"	
LOOP BAR	#6	2	1 @ 7'-8" 1 @ 7'-7"	
HOOP BAR	#4	7	9'-3"	

NOTE:
ALL RADII ARE TO INSIDE FACE
LENGTHS ARE TO OUTSIDE FACE

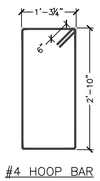

#4 HOOP BAR

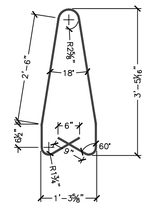

4 STIRRUP BAR

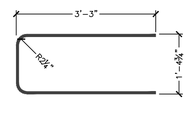

6 LOOP BAR @ BLOCK END

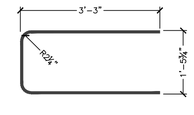

6 LOOP BAR @ SSB END

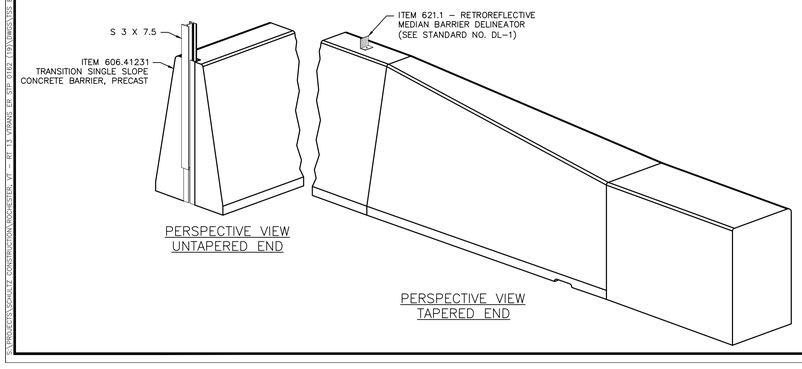

PERSPECTIVE VIEW
UNTAPERED END

PERSPECTIVE VIEW
TAPERED END

4 REQ'D
PIECE TO WEIGH: 17,800# (4.24CY)

GENERAL NOTES:
1. THE CONCRETE BARRIER DETAILS, AS SHOWN ON THIS SHEET, ARE IN COMPLIANCE WITH THE REQUIREMENTS VAOT STANDARD SPECIFICATIONS FOR CONSTRUCTION SEC 540.
2. I-BEAMS AND STRUCTURAL TUBES SHALL BE GALVANIZED AFTER FABRICATION.
3. STUD WELDING SHALL BE IN ACCORDANCE WITH SUBSECTION 714.10.
4. SLOT IN STRUCTURAL TUBE SHALL BE CUT WITH MECHANICALLY GUIDED MEANS TO A SMOOTH, UNIFORM SURFACE MEETING A SURFACE ROUGHNESS OF 1000 MICROINCHES OR BETTER (ANSI B46.1).

MATERIAL NOTES:
1. THE BARRIERS SHALL BE LIGHT COLORED CLASS "A" CONCRETE HAVING A MINIMUM 28 DAY COMPRESSION STRENGTH OF 4,000 PSI. BARRIERS SHALL HAVE A SMOOTH UNIFORM SURFACE FREE OF DEFECTS AND IRREGULARITIES. CASTING DATE SHALL BE SHOWN ON BARRIER. ALL EXPOSED EDGES OF CONCRETE SHALL BE CHAMFERED 3/4", UNLESS NOTED OTHERWISE.
2. ALL REINFORCING STEEL SHALL BE LEVEL II (DUAL COATED OR STAINLESS CLAD). REINFORCEMENT SHOWN IS THE MINIMUM REQUIRED.
3. EACH BARRIER UNIT SHALL INCLUDE ONE S 3x7.5 AS SHOWN ON THIS PLAN SHEET.

No.	Date	Revision	By
0	XX/XX/XXXX	XX	XXX

MICHIE CORPORATION, INC.
173 BUXTON INDUSTRIAL DRIVE-PO BOX 870
HENNIKER, NH 03242
PHONE: 603-428-3218
FAX: 603-428-7426

VAOT Proj.# ER STP 0162 (19) - VT Rt 73 Bridge 13
Rochester, VT
20' Transition Single Slope Concrete Barrier

Project No. 4536
Date: 5/7/2014
Designed by:
Drawn by: CFP
Checked by: XXX
Scale: AS SHOWN

Prepared for:
WM Schultz Const, Inc.
PO Box 2620
Ballston Spa, NY 12020

DWG NO.
S2.0