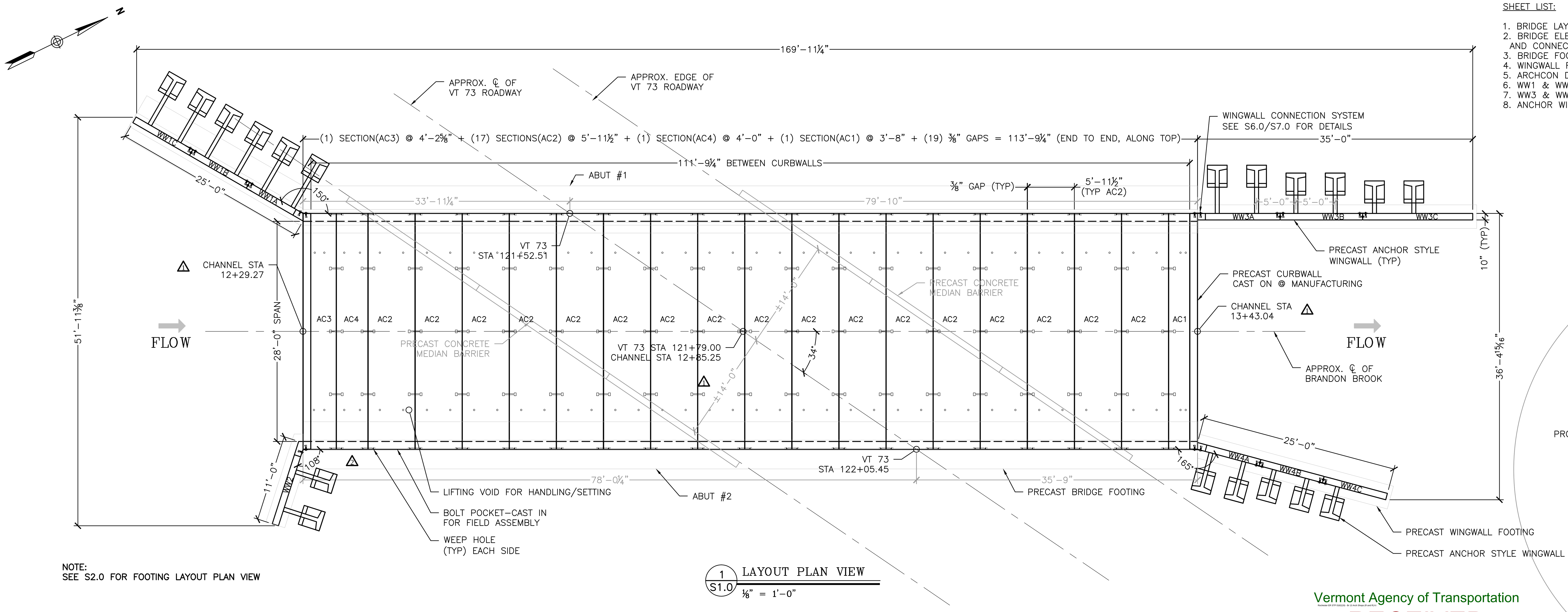

NOTE:
SEE S2.0 FOR FOOTING LAYOUT PLAN VIEW

1 / S1.0 LAYOUT PLAN VIEW
⅛" = 1'–0"

SHEET LIST:

1. BRIDGE LAYOUT VIEWS
2. BRIDGE ELEVATIONS, FOOTING LAYOUT AND CONNECTION DETAILS
3. BRIDGE FOOTING DETAILS
4. WINGWALL FOOTING DETAILS
5. ARCHCON DETAILS
6. WW1 & WW2 DETAILS
7. WW3 & WW4 DETAILS
8. ANCHOR WINGWALL DETAILS

PRECAST SECTION QUANTITIES (revision 1)

SECTION	QTY	HEAVIEST PICK	H.P. PIECEMARK
ARCHCON	20	52,550#	AC1
SLAB BRIDGE FOOTING	18	15,330#	BF3
PEDESTAL BRIDGE FOOTING	18	31,680#	BF1
SLAB WW FOOTING	5	15,880#	WWF3
PEDESTAL WW FOOTING	2	46,600#	WWF1B
WINGWALL	8	21,090#	WW3A

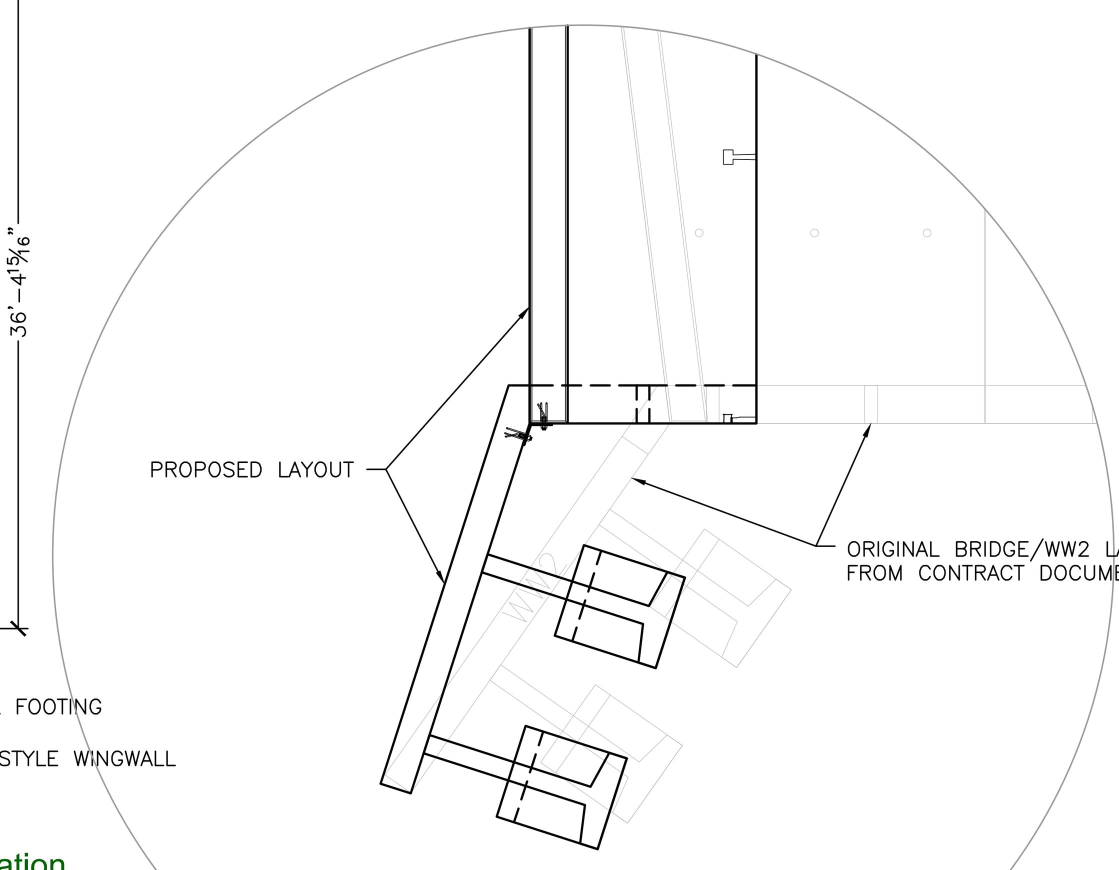

NOTE:
WINGWALL SHOULDER ELEVATION IS KEPT, WINGWALL IS SHORTENED TO END IN EXACT LOCATION AS THE PROPOSED WALL, GRADING TO BE ADJUSTED TO FIT

3 / S1.0 PROPOSED WW2 LAYOUT
¼" = 1'–0"

Vermont Agency of Transportation
RECEIVED
ON: June 3, 2014
and Checked for
CONFORMANCE
BY: Jennifer Fitch DATE: 06/04/2014

NOTE:
WINGWALLS NOT SHOWN IN THIS VIEW FOR CLARITY

NOTE:
SEE ELEVATION VIEWS ON S2.0 FOR WINGWALL AND CURBWALL ELEVATIONS

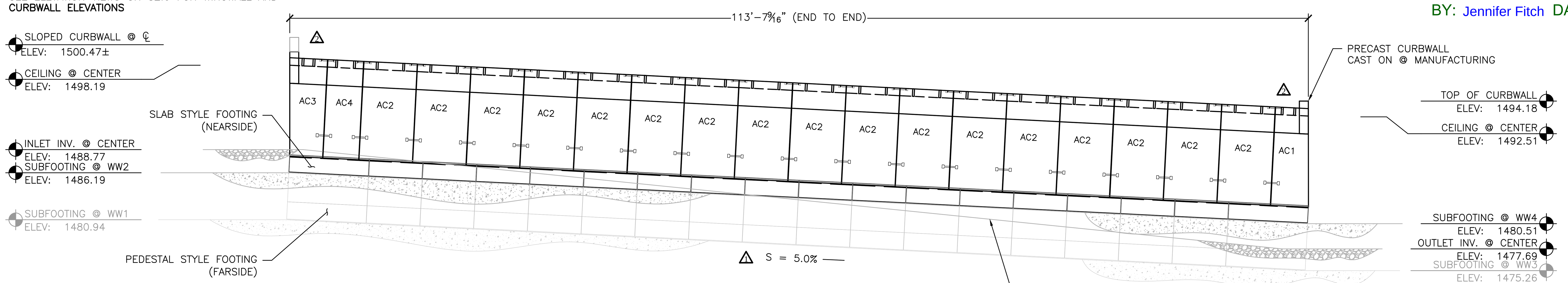

2 / S1.0 PROFILE VIEW
⅛" = 1'–0"

BILL OF MATERIALS

QTY	DESCRIPTION	IN STOCK	ORDERED FROM	DATE ORDERED	DATE DELIVERED
	ITEMS CAST-IN				
274	5 TON UTILITY ANCHOR				
76	RL-24 8T X 7 1/8" TECH ANCHOR				
50	1-8NC DOUBLE WALL ANCH				
8LF	4" PVC SLEEVE (WEEP HOI				
70LF	2.5" PVC SLEEVE (LIFTING V				
44	#4 EPOXY COATED DBS (2'-				
44	#4 DUAL COATED DBI (2'-0")				
88	#5 EPOXY COATED DBS (2'-				
88	#5 DUAL COATED DBI (2'-0")				
	ITEMS FOR PRESHI				
	ITEMS TO SHIP T				
100	4"X4"X.25" PLASTIC SHIMS				
3	(108°)1/2" GALV. WINGWALL				
3	(150°)1/2" GALV. WINGWALL				
2	(165°)1/2" GALV. WINGWALL				
18	(180°)1/2" GALV. WINGWALL				
95	1"X20" GALV. THREADED R				
104	1"X5" GALV. THREADED RO				
840LF	24" WIDE ROYSTON JOINT V				

SHOP DRAWING REVIEW

☐ REVIEWED AS REQUIRED BY THE CONSTRUCTION CONTRACT DOCUMENTS AND APPROVED, BUT ONLY FOR CONFORMANCE TO THE DESIGN CONCEPT OF THE WORK, AND SUBJECT TO FURTHER LIMITATIONS AND REQUIREMENTS CONTAINED IN THE CONSTRUCTION CONTRACT DOCUMENTS.

☐ REJECTED ☒ REVISE AND RESUBMIT ☐ FURNISH AS CORRECTED

CORRECTIONS OR COMMENTS MADE ON THE SHOP DRAWINGS DURING THIS REVIEW DO NOT RELIEVE CONTRACTOR FROM COMPLIANCE WITH REQUIREMENTS OF THE DRAWINGS AND SPECIFICATIONS. THIS CHECK IS ONLY FOR REVIEW OF GENERAL CONFORMANCE WITH THE DESIGN CONCEPT OF THE PROJECT AND GENERAL COMPLIANCE WITH THE INFORMATION GIVEN IN THE CONTRACT DOCUMENTS. THE CONTRACTOR IS RESPONSIBLE FOR; CONFIRMING AND CORRELATING ALL QUANTITIES AND DIMENSIONS; SELECTING FABRICATION PROCESSES AND TECHNIQUES OF CONSTRUCTION; COORDINATING HIS WORK WITH THAT OF ALL OTHER TRADES; AND PERFORMING HIS WORK IN A SAFE AND SATISFACTORY MANNER.

Vanasse Hangen Brustlin, Inc.
7056 US Route 7
North Ferrisburgh, VT 05473
802.425.7788

Job Number: 57518.00
Reviewed By: E.A. Fiala
Date: 6/3/2014

GENERAL NOTES:

1. DO NOT SCALE FROM THE DRAWINGS. IF A REQUIRED DIMENSION IS NOT PROVIDED, CONSULT THE ENGINEER.

2. IF ANY OF THE WORK TO BE DONE AS SHOWN ON THE DRAWINGS DOES NOT CORRESPOND WITH THE EXISTING FIELD CONDITIONS, CONTACT THE ENGINEER PRIOR TO PROCEEDING WITH THE WORK IN QUESTION.

3. FIELD–VERIFY ALL ELEVATIONS PRIOR TO THE START OF CONSTRUCTION. IF THERE ARE ANY DISCREPANCIES, CONSULT THE ENGINEER PRIOR TO PROCEEDING WITH THE WORK IN QUESTION.

4. MAINTAIN MINIMUM 60 DEGREE SLING ANGLE WHEN HANDLING PRECAST COMPONENENTS.

5. PRECAST COMPONENTS SHALL ACHIEVE THE MINIMUM DESIGN COMPRESSIVE STRENGTH PRIOR TO SHIPPING, UNLESS OTHERWISE APPROVED BY THE ENGINEER.

6. PRECAST COMPONENTS SHALL REACH A MINIMUM COMPRESSIVE STRENGTH OF 3,000 PSI PRIOR TO STRIPPING, UNLESS OTHERWISE DIRECTED BY THE ENGINEER.

7. ALL VOIDS SHALL BE FILLED WITH NON–SHRINK GROUT.

8. SHOP DRAWINGS WERE DEVELOPED USING THE FOLLOWING RESOURCES FOR THE CONTRACT:
- "VT ROUTE 73, BRIDGE NO 13 – TOWN OF ROCHESTER, COUNTY OF WINDSOR" PREPARED BY THE VAOT, PROJECT NUMBER ER STP 0162 (19); SHEETS 13–45 OF 238, DATED 9/3/2013.

9. IF THERE IS ADDITIONAL INFORMATION PERTINENT TO THE FABRICATION AND INSTALLATION OF THESE UNITS THAT IS NOT CONTAINED WITHIN THE RESOURCES LISTED ABOVE IT SHALL BE BROUGHT TO THE ATTENTION OF MICHIE CORPORATION. FAILURE TO MAKE SUCH ADDITIONAL INFORMATION AVAILABLE SHALL RELIEVE MICHIE CORPORATION OF ALL LIABILITIES ARISING FROM ERRORS OR OMISSIONS RELATED TO THE OMITTED INFORMATION.

CURBWALL NOTES:

1. CURBWALL CONCRETE SHALL BE SELF–CONSOLIDATING CONFORMING TO ASTM C260 WITH A MINIMUM 28–DAY COMPRESSIVE STRENGTH OF 5,000 PSI. MICHIE MIX DESIGN #1953CAX. AGGREGATE SHALL CONFORM TO ASTM C–33 WITH A MAXIMUM DIAMETER OF 3/4". CEMENT SHALL CONFORM TO ASTM C150.

2. UNLESS NOTED OTHERWISE, REINFORCING SHALL BE GRADE 60 LEVEL 2 DUAL COATED BARS PER VTRANS SPECIFICATIONS. ALL BARS SHALL BE BENT COLD.

3. ALL EXPOSED EDGES EXCEPT WHERE NOTED SHALL BE CHAMFERED 3/4".

4. EXPOSED SURFACES SHOULD BE COATED WITH VTRANS APPROVED WATER REPELLENT (SUPPLIED AND APPLIED BY OTHERS).

ARCH CON NOTES:

1. ARCH CON SECTIONS ARE DESIGNED IN ACCORDANCE WITH
- AASHTO "LRFD BRIDGE DESIGN SPECIFICATIONS", 6TH EDITION.
- ASTM "C1504, STANDARD SPECIFICATION FOR MANUFACTURE OF PRECAST REINFORCED CONCRETE THREE–SIDED STRUCTURES FOR CULVERTS AND STORM DRAINS".
- VTRANS 2011 "STANDARD SPECIFICATIONS FOR CONSTRUCTION".

2. THE FOLLOWING CRITERIA WAS USED FOR DESIGN:
- LIVE LOAD: AASHTO HL–93
- EARTH COVER: 0–2' FEET
- BACKFILL SOIL UNIT WEIGHT: 140 PCF
- BACKFILL SOIL FRICTION ANGLE: 34 DEG
- MINIMUM LATERAL EARTH PRESSURE: 35 PSF
- MAXIMUM LATERAL EARTH PRESSURE: 70 PSF
- CONCRETE STRENGTH: 6,500 PSI
- STEEL YIELD STRENGTH: 60,000 PSI

3. ARCHCON CONCRETE SHALL BE SELF–CONSOLIDATING CONFORMING TO ASTM C260 WITH A MINIMUM 28–DAY COMPRESSIVE STRENGTH OF 6,500 PSI. MICHIE MIX DESIGN # 1972CAX. AGGREGATE SHALL CONFORM TO ASTM C–33 WITH A MAXIMUM DIAMETER OF 3/4". CEMENT SHALL CONFORM TO ASTM C150.

4. UNLESS NOTED OTHERWISE, REINFORCING SHALL BE LEVEL 1 GRADE 60 EPOXY COATED BARS CONFORMING TO ASTM A–775. ALL BARS SHALL BE BENT COLD.

5. ALL EXPOSED EDGES EXCEPT WHERE NOTED SHALL BE CHAMFERED 3/4".

6. UNLESS OTHERWISE SPECIFIED IN THE CONTRACT DOCUMENTS, BACKFILL MATERIAL SHALL CONFORM TO VTRANS SECTION 704.08 GRANULAR BACKFILL FOR STRUCTURES. BACKFILL SHALL EXTEND FOR A MINIMUM DISTANCE OF 5'–0" BEYOND THE HORIZONTAL LIMITS OF THE STRUCTURE. PLACEMENT SHALL CONFORM TO VTRANS SECTION 204.08.

7. EXPOSED SURFACES SHOULD BE COATED WITH VTRANS APPROVED WATER REPELLENT (SUPPLIED AND APPLIED BY OTHERS).

8. EACH SECTION SHALL BE PROVIDED WITH BOLT POCKETS FOR ATTACHMENT TO ADJACENT SECTIONS. 7/8" DIA. GALV. THREADED ROD, WASHERS AND NUTS SHALL BE PROVIDED FOR ASSEMBLY IN THE FIELD. CLOSED–CELL NEOPRENE JOINT SEALANT SHALL BE USED IN ALL JOINTS.

9. ROYSTON JOINT WRAP WITH ADHESIVE PROVIDED BY MICHIE CORP, INSTALLED BY OTHERS. BARRIER MEMBRANE AND PROTECTION BOARD RECOMMENDED. INSTALL PER VTRANS SPECIFICATIONS.

PRECAST CONCRETE FOOTING NOTES:

1. FOOTING SECTIONS ARE DESIGNED IN ACCORDANCE WITH
- AASHTO "LRFD BRIDGE DESIGN SPECIFICATIONS", 6TH EDITION.
- VTRANS 2011 "STANDARD SPECIFICATIONS FOR CONSTRUCTION".

2. THE FOLLOWING CRITERIA WAS USED FOR DESIGN:
- BACKFILL SOIL UNIT WEIGHT: 140 PCF
- BACKFILL SOIL FRICTION ANGLE: 34 DEG
- CONCRETE STRENGTH: 5,000 PSI
- STEEL YIELD STRENGTH: 60,000 PSI
- FACTORED BEARING RESISTANCE: 14.1 KSF (ϕ = .45)
CONTRACTOR IS RESPONSIBLE FOR ENSURING THAT THE FOUNDATION MATERIAL ACHIEVES THE DESIGN FACTORED BEARING RESISTANCE.

3. FOOTING CONCRETE SHALL BE SELF–CONSOLIDATING CONFORMING TO ASTM C260 WITH A MINIMUM 28–DAY COMPRESSIVE STRENGTH OF 5,000 PSI. MICHIE MIX DESIGN #1953CAX. AGGREGATE SHALL CONFORM TO ASTM C–33 WITH A MAXIMUM DIAMETER OF 3/4". CEMENT SHALL CONFORM TO ASTM C150.

4. UNLESS NOTED OTHERWISE, REINFORCING SHALL BE LEVEL 1 GRADE 60 EPOXY COATED BARS CONFORMING TO ASTM A–775. ALL BARS SHALL BE BENT COLD.

5. ALL EXPOSED EDGES EXCEPT WHERE NOTED SHALL BE CHAMFERED 3/4".

6. UNLESS OTHERWISE SPECIFIED IN THE CONTRACT DOCUMENTS, SUBGRADE PREPARATION SHALL CONFORM TO VTRANS 204.07 BEDDING FOR STRUCTURES.

7. UNLESS OTHERWISE SPECIFIED IN THE CONTRACT DOCUMENTS, BACKFILL MATERIAL SHALL CONFORM TO VTRANS SECTION 704.08 GRANULAR BACKFILL FOR STRUCTURES. PLACEMENT SHALL CONFORM TO VTRANS SECTION 204.08.

8. EACH FOOTING SECTION SHALL BE PROVIDED WITH BOLT POCKETS FOR ATTACHMENT TO ADJACENT SECTIONS. 7/8" DIA. GALV. THREADED ROD, WASHERS AND NUTS SHALL BE PROVIDED FOR ASSEMBLY IN THE FIELD. CLOSED–CELL NEOPRENE JOINT SEALANT SHALL BE USED IN ALL JOINTS. FILL SHEAR KEY WITH HIGH STRENGTH NON–SHRINK GROUT PRIOR TO ERECTION OF BRIDGE UNITS.

MICHIE CORPORATION
APPROVED FOR
PRODUCTION
DATE: 6/2/2014
INITIAL: __________

WING WALL NOTES:

1. SECTIONS ARE DESIGNED IN ACCORDANCE WITH
- AASHTO "LRFD BRIDGE DESIGN SPECIFICATIONS", 6TH EDITION
- AASHTO STANDARD SPECIFICATIONS FOR HIGHWAY BRIDGES, 17TH EDITION.
- VTRANS 2011 "STANDARD SPECIFICATIONS FOR CONSTRUCTION".

2. THE FOLLOWING SOIL PROPERTIES WERE USED IN THE DESIGN:

	SOIL WEIGHT [PCF]	FRICTION ANGLE [DEG]
RETAINED SOIL	140	34
FOUNDATION SOIL	140	40

- LIVE LOAD SURCHARGE = 2FT EQUIVALENT HEIGHT OF SOIL
- BACKSLOPE ANGLE: VARIES
- FACTORED BEARING REISTANCE = 14.1 KSF
CONTRACTOR IS RESPONSIBLE FOR ASSURING THAT THE FOUNDATION MATERIAL ACHIEVES THE DESIGN FACTORED BEARING RESISTANCE.

3. CONCRETE SHALL BE SELF–CONSOLIDATING CONFORMING TO ASTM C260 WITH A MINIMUM 28–DAY COMPRESSIVE STRENGTH OF 5,000 PSI. MICHIE MIX DESIGN #1953CAX. AGGREGATE SHALL CONFORM TO ASTM C–33 WITH A MAXIMUM DIAMETER OF 3/4". CEMENT SHALL CONFORM TO ASTM C150.

4. UNLESS NOTED OTHERWISE, REINFORCING SHALL BE LEVEL 1 GRADE 60 EPOXY COATED BARS CONFORMING TO ASTM A–775. ALL BARS SHALL BE BENT COLD.

5. ALL EXPOSED EDGES EXCEPT WHERE NOTED SHALL BE CHAMFERED 3/4".

6. UNLESS OTHERWISE SPECIFIED IN THE CONTRACT DOCUMENTS, BACKFILL MATERIAL SHALL CONFORM TO VTRANS SECTION 704.08 GRANULAR BACKFILL FOR STRUCTURES. PLACEMENT SHALL CONFORM TO VTRANS SECTION 204.08.

7. ALL EXPOSED SURFACES OF CONCRETE SHALL BE COATED WITH A VTRANS APPROVED WATER REPELLANT (SUPPLIED AND APPLIED BY OTHERS).

8. UNLESS OTHERWISE SPECIFIED IN THE CONTRACT DOCUMENTS, SUBGRADE PREPARATION SHALL CONFORM TO VTRANS 204.07 BEDDING FOR STRUCTURES. FOOTINGS SHALL BE PLACED AT ELEVATIONS SHOWN. ALL TOPSOIL, LOOSE FILL, AND DELETERIOUS MATERIALS SHALL BE REMOVED BEFORE PLACING BACKFILL.

No.	Date	Revision	By
2	6/2/2014	Revised For constructability (form limitations)	CFP
1	5/9/2014	Revised per VHB Comments 5/7/2014	PJL

MICHIE CORPORATION, INC.
173 BUXTON INDUSTRIAL DRIVE-PO BOX 870
HENNIKER, NH 03242
PHONE: 603-428-3218
FAX: 603-428-7426

VT Route 73 - Bridge 13 (Project # ER STP 0162 (19))
Rochester, VT

28'x10' Archcon w/ Wingwalls and Footings - Layout Views

Project No. 4653 | Scale: AS SHOWN | Date: 4/2/2014 | Designed by: Delta | Drawn by: CFP | Checked by: XXX

Prepared for:
WM Schultz Construction
PO Box 2620
Ballston Spa, NY 12020

DWG NO.
S1.0

S:\PROJECTS\SCHULTZ CONSTRUCTION\ROCHESTER, VT – RT 13 VTRANS ER STP 0162 (19)\DWGS\AC 28X10 SCHULTZ 4653 (REV 06 02 14).DWG 6/3/2014 10:00 AM

Vermont Agency of Transportation

RECEIVED

ON: June 3, 2014

and Checked for

CONFORMANCE

BY: Jennifer Fitch DATE: 06/04/2014

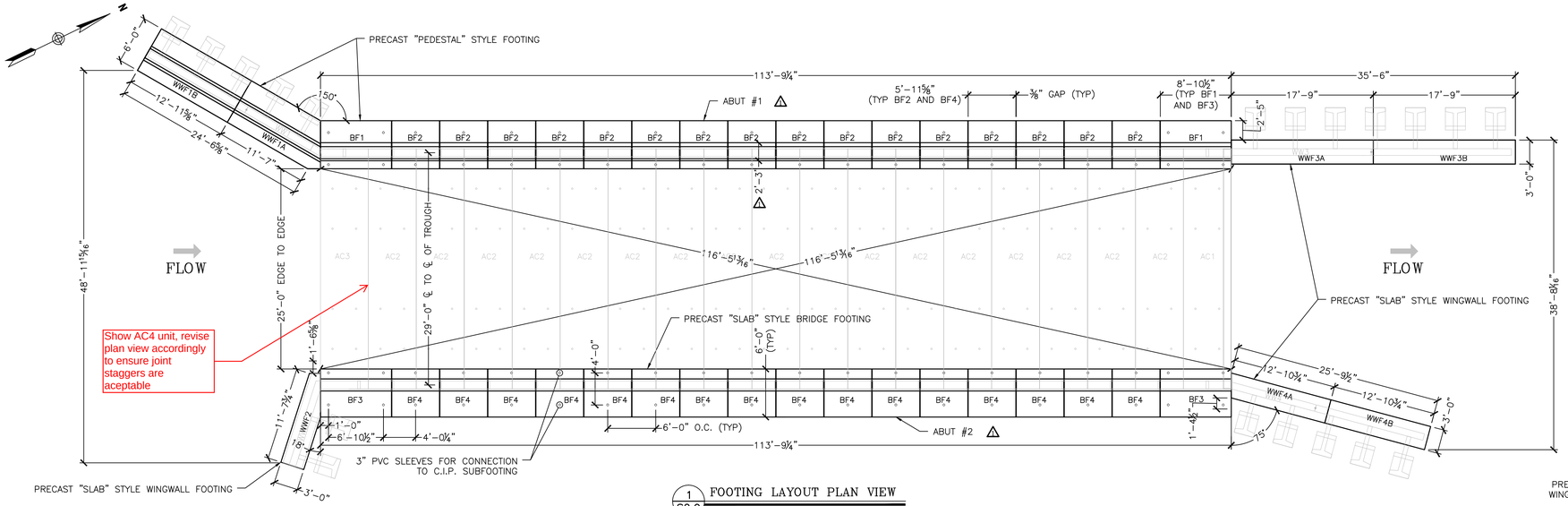

1 S2.0 FOOTING LAYOUT PLAN VIEW

⅛" = 1'-0"

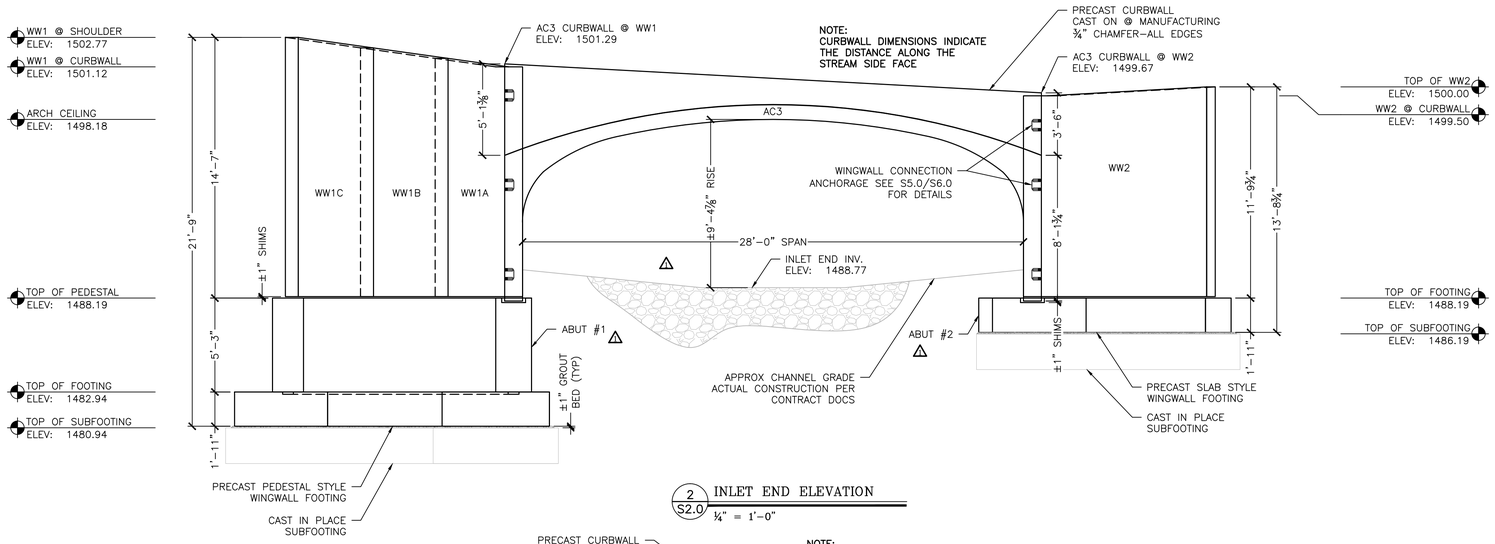

2 S2.0 INLET END ELEVATION

¼" = 1'-0"

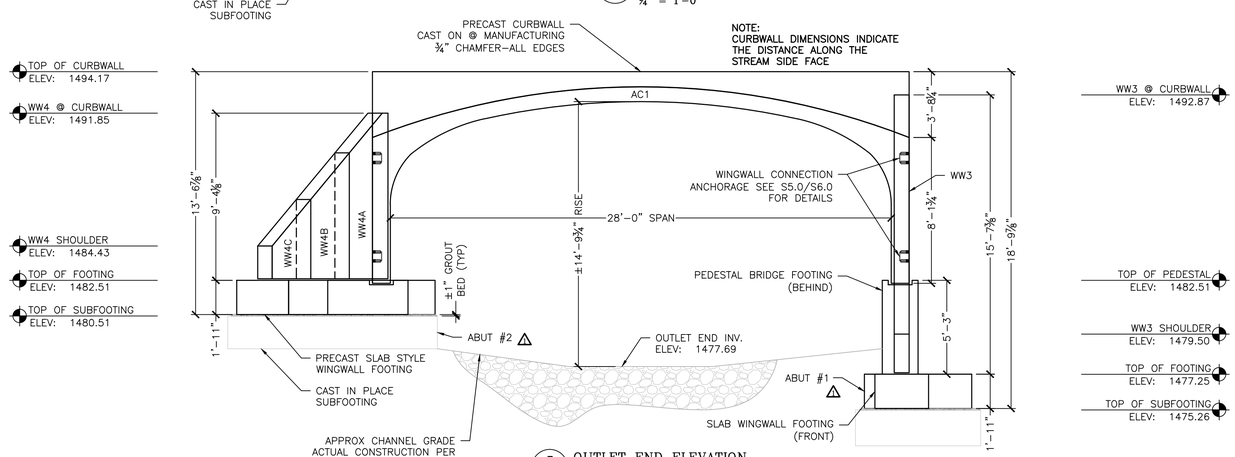

3 S2.0 OUTLET END ELEVATION

¼" = 1'-0"

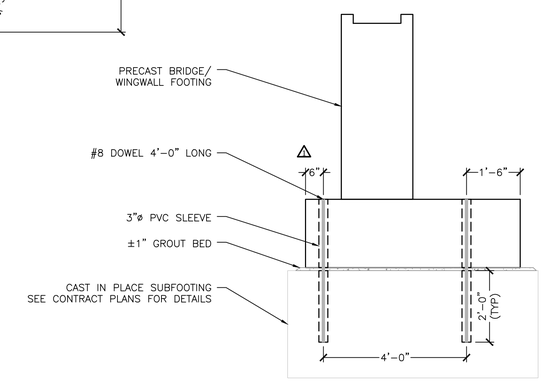

4 S2.0 SUBFOOTING/FOOTING DETAIL

½" = 1'-0"

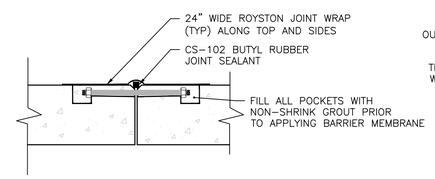

ELEVATION

6 S2.0 ARCH BRIDGE JOINT DETAIL

1" = 1'-0"

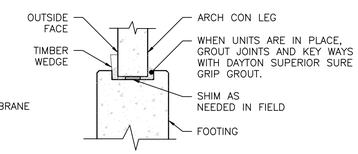

5 S2.0 UNIT SETTING DETAILS

½" = 1'-0"

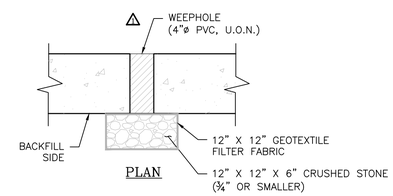

PLAN

7 S2.0 WEEPHOLE BACKFILL DETAIL

1" = 1'-0"

SHOP DRAWING REVIEW

☐ REVIEWED AS REQUIRED BY THE CONSTRUCTION CONTRACT DOCUMENTS AND APPROVED, BUT ONLY FOR CONFORMANCE TO THE DESIGN CONCEPT OF THE WORK, AND SUBJECT TO FURTHER LIMITATIONS AND REQUIREMENTS CONTAINED IN THE CONSTRUCTION CONTRACT DOCUMENTS.

☐ REJECTED ☒ REVISE AND RESUBMIT ☐ FURNISH AS CORRECTED

CORRECTIONS OR COMMENTS MADE ON THE SHOP DRAWINGS DURING THIS REVIEW DO NOT RELIEVE CONTRACTOR FROM COMPLIANCE WITH REQUIREMENTS OF THE DRAWINGS AND SPECIFICATIONS. THIS CHECK IS ONLY FOR REVIEW OF GENERAL CONFORMANCE WITH THE DESIGN CONCEPT OF THE PROJECT AND GENERAL COMPLIANCE WITH THE INFORMATION GIVEN IN THE CONTRACT DOCUMENTS. THE CONTRACTOR IS RESPONSIBLE FOR: CONFIRMING AND CORRELATING ALL QUANTITIES AND DIMENSIONS; SELECTING FABRICATION PROCESSES AND TECHNIQUES OF CONSTRUCTION; COORDINATING HIS WORK WITH THAT OF ALL OTHER TRADES; AND PERFORMING HIS WORK IN A SAFE AND SATISFACTORY MANNER.

VHB Vanasse Hangen Brustlin, Inc.
7056 US Route 7
North Ferrisburgh, VT 05473
802.425.7788

Job Number: 57518.00
Reviewed By: E.A. Fiala
Date: 6/3/2014

No.	Date	Revision	By
4	6/2/2014	Revised For constructability (form limitations)	CFP
3	5/8/2014	Revised per VHB Comments 5/7/2014	PJL

MICHIE CORPORATION, INC.
173 BUXTON INDUSTRIAL DRIVE·PO BOX 870
HENNIKER, NH 03242
PHONE: 603-428-3218
FAX: 603-428-7426

VT Route 73 - Bridge 13 (Project # ER STP 0162 (19))
Rochester, VT

28'x10' Archcon - Elevation, Footing Layout and Connection Details

Project No. 4653 | Scale: AS SHOWN

Date: 4/2/2014 | Designed by: Delta | Drawn by: CFP | Checked by: PJL/Delta

Prepared for:
WM Schultz Construction
PO Box 2620
Ballston Spa, NY 12020

DWG NO. S2.0

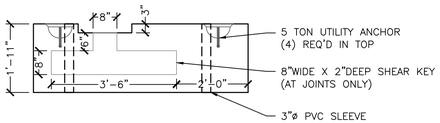

1 S3.0 (TYP) SLAB FOOTING SECTION
½" = 1'-0"

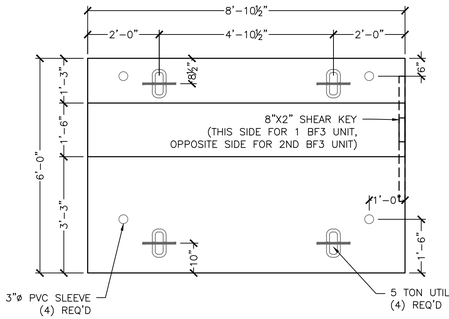

2 S3.0 BF3 PLAN VIEW
½" = 1'-0"

BF3-2 REQ'D
ITEM#: 282400
FOOTING: 3.65CY (15,330#)

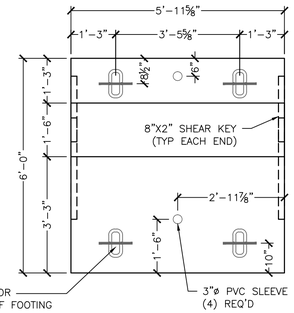

3 S3.0 BF4 PLAN VIEW
½" = 1'-0"

BF4-16 REQ'D
ITEM#: 282400
FOOTING: 2.46CY (10,330#)

BF3 REINFORCING (COUNTS REFLECT 1 UNIT)					
MARK	QTY	SIZE	SPACING	TYPE	CUT LENGTH
SFS1	15	#5	7"	STIRRUP	11'-2¼"
SFS2	9	#4	12"	STRAIGHT	5'-6"
SFS3	12	#4	12"	STRAIGHT	8'-4½"

BF4 REINFORCING (COUNTS REFLECT 1 UNIT)					
MARK	QTY	SIZE	SPACING	TYPE	CUT LENGTH
SFS1	10	#5	7"	STIRRUP	11'-2¼"
SFS2	6	#4	12"	STRAIGHT	5'-6"
SFS3	12	#4	12"	STRAIGHT	5'-5⅝"

NOTE:
- ALL FOOTING STEEL BE BE LEVEL 1 (GRADE 60 EPOXY COATED)
- ALL STEEL TO HAVE 3" CLEAR COVER UNLESS OTHERWISE NOTED

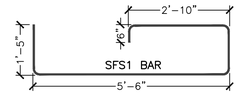

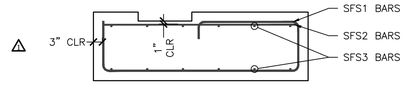

4 S3.0 SLAB REINFORCING SECTION
½" = 1'-0"

Vermont Agency of Transportation
Hardware ID: EFF-0102236 - TR-13 R13 Bridge Life and Fit 1
RECEIVED
ON: June 3, 2014
and Checked for
CONFORMANCE
BY: Jennifer Fitch DATE: 06/04/2014

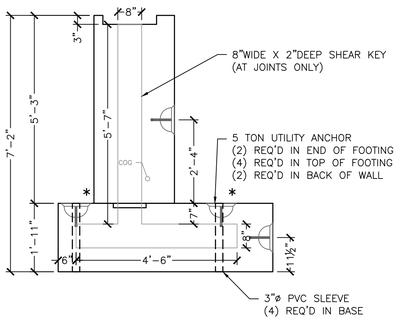

5 S3.0 (TYP) SECTION VIEW
½" = 1'-0"

*USE FOR SETTING IN FIELD

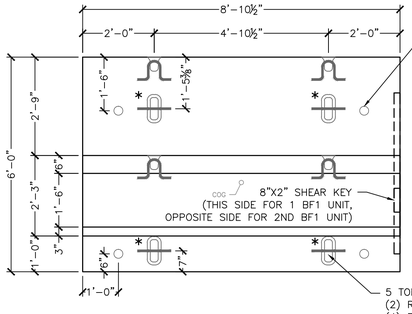

6 S3.0 BF1 PLAN VIEW
½" = 1'-0"

BF1-2 REQ'D
ITEM#: 282400
BASE: 3.78CY (15,880#)
PEDESTAL: 3.76CY (15,800#)
TOTAL WEIGHT: 31,680#

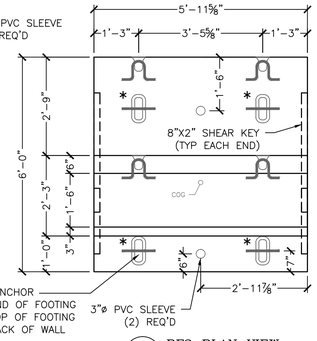

7 S3.0 BF2 PLAN VIEW
½" = 1'-0"

BF2-16 REQ'D
ITEM#: 282400
BASE: 2.54CY (10,670#)
PEDESTAL: 2.53CY (10,630#)
TOTAL WEIGHT: 21,300#

BF1 REINFORCING (COUNTS REFLECT 1 UNIT)					
MARK	QTY	SIZE	SPACING	TYPE	CUT LENGTH
PFS1	15	#6	7"	STRAIGHT	5'-6"
PFS2	9	#4	12"	STRAIGHT	5'-6"
PFS3	12	#4	12"	STRAIGHT	8'-4½"
PFS4	15	#4	7"	"L" BARS	7'-5"
PFS5	10	#4	12"	STRAIGHT	8'-4½"
PFS6	15	#6	7"	"L" BARS	7'-5"

BF2 REINFORCING (COUNTS REFLECT 1 UNIT)					
MARK	QTY	SIZE	SPACING	TYPE	CUT LENGTH
PFS1	11	#6	7"	STRAIGHT	5'-6"
PFS2	6	#4	12"	STRAIGHT	5'-6"
PFS3	12	#4	12"	STRAIGHT	5'-5⅝"
PFS4	11	#4	7"	"L" BARS	7'-5"
PFS5	10	#4	12"	STRAIGHT	5'-5⅝"
PFS6	11	#6	7"	"L" BARS	7'-5"

NOTE:
- ALL FOOTING STEEL BE BE LEVEL 1 (GRADE 60 EPOXY COATED)
- ALL FOOTING STEEL TO BE 3" CLEAR COVER UNLESS OTHERWISE NOTED

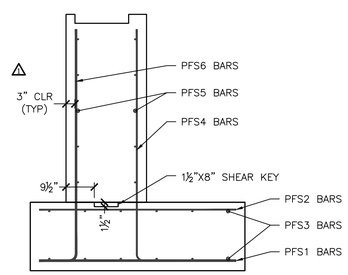

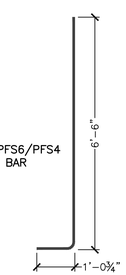

7 S3.0 PEDESTAL REINFORCING SECTION
½" = 1'-0"

SHOP DRAWING REVIEW

☐ REVIEWED AS REQUIRED BY THE CONSTRUCTION CONTRACT DOCUMENTS AND APPROVED, BUT ONLY FOR CONFORMANCE TO THE DESIGN CONCEPT OF THE WORK, AND SUBJECT TO FURTHER LIMITATIONS AND REQUIREMENTS CONTAINED IN THE CONSTRUCTION CONTRACT DOCUMENTS
☐ REJECTED ☒ REVISE AND RESUBMIT ☐ FURNISH AS CORRECTED

CORRECTIONS OR COMMENTS MADE ON THE SHOP DRAWINGS DURING THIS REVIEW DO NOT RELIEVE CONTRACTOR FROM COMPLIANCE WITH REQUIREMENTS OF THE DRAWINGS AND SPECIFICATIONS. THIS CHECK IS ONLY FOR REVIEW OF GENERAL CONFORMANCE WITH THE DESIGN CONCEPT OF THE PROJECT AND GENERAL COMPLIANCE WITH THE INFORMATION GIVEN IN THE CONTRACT DOCUMENTS. THE CONTRACTOR IS RESPONSIBLE FOR: CONFIRMING AND CORRELATING ALL QUANTITIES AND DIMENSIONS; SELECTING FABRICATION PROCESSES AND TECHNIQUES OF CONSTRUCTION; COORDINATING HIS WORK WITH THAT OF ALL OTHER TRADES; AND PERFORMING HIS WORK IN A SAFE AND SATISFACTORY MANNER.

Vanasse Hangen Brustlin, Inc.
7056 US Route 7
North Ferrisburgh, VT 05473
802.425.7788

Job Number: 57518.00
Reviewed By: E.A. Fiala
Date: 6/3/2014

No.	Date	Revision	By
1	6/2/2014	Revised For constructability (form limitations)	CFP
2	5/9/2014	Revised per VHB Comments 5/7/2014	PJL

MICHIE CORPORATION, INC.
173 BUXTON INDUSTRIAL DRIVE-PO BOX 870
HENNIKER, NH 03242
PHONE: 603-428-3218
FAX: 603-428-7426

VT Route 73 - Bridge 13 (Project # ER STP 0162 (19))
Rochester, VT
28'x10' Archcon - Bridge Footing Details

Project No. 4653
Date: 4/2/2014
Designed by: Delta
Drawn by: CFP
Checked by: PJL/Delta
Scale: AS SHOWN

Prepared for:
WM Schultz Construction
PO Box 2620
Ballston Spa, NY 12020

DWG NO.
S3.0

J:\PROJECTS\SCHULTZ CONSTRUCTION\ROCHESTER, VT - RT 13 V\BRIDGE ER STP 0162 (19)\WORKING\AC 28x10 SCHULTZ 4653.DWG REV 06 02 14 TUE 6/3/2014 10:00 AM

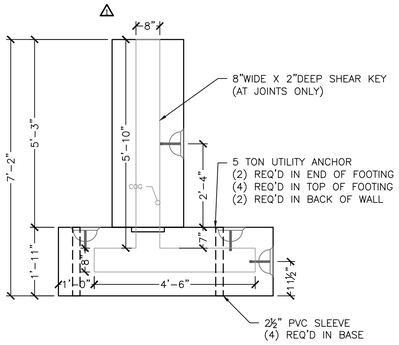

1 S4.0 WW FOOTING SECTION (PEDESTAL)
½" = 1'-0"

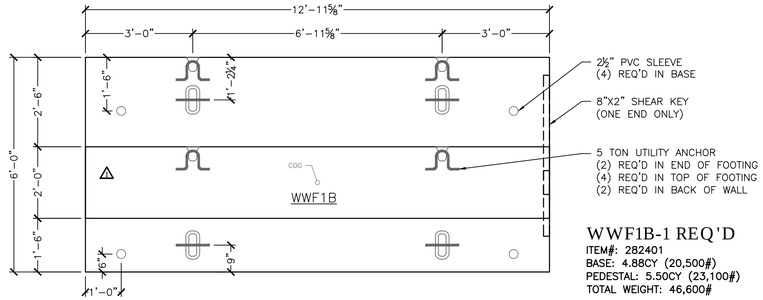

WWF1B-1 REQ'D
ITEM#: 282401
BASE: 4.88CY (20,500#)
PEDESTAL: 5.50CY (23,100#)
TOTAL WEIGHT: 46,600#

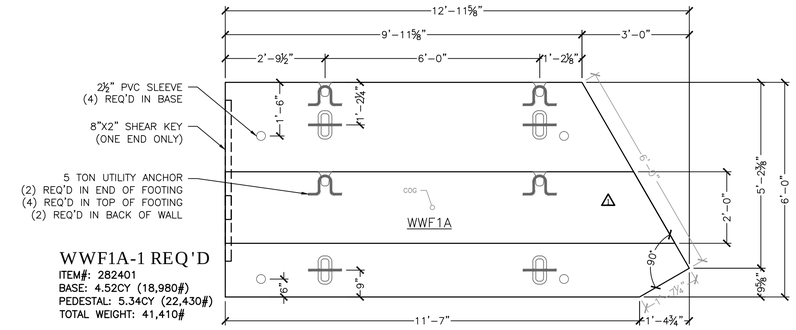

WWF1A-1 REQ'D
ITEM#: 282401
BASE: 4.52CY (18,980#)
PEDESTAL: 5.34CY (22,430#)
TOTAL WEIGHT: 41,410#

2 S4.0 WW FOOTING PLAN (PEDESTAL)
½" = 1'-0"

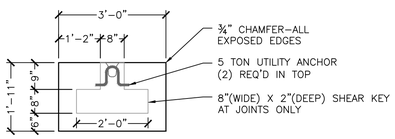

4 S4.0 WW FOOTING SECTION (SLAB)
½" = 1'-0"

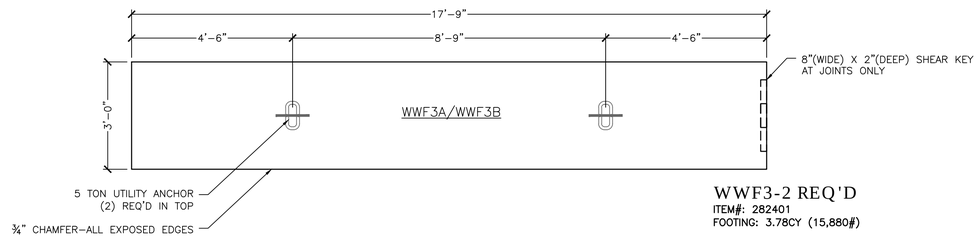

WWF3-2 REQ'D
ITEM#: 282401
FOOTING: 3.78CY (15,880#)

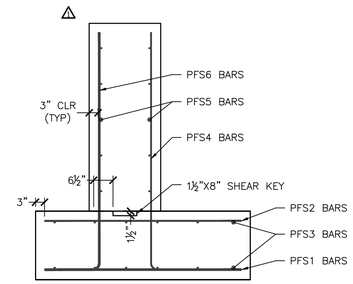

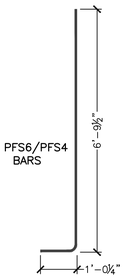

3 S4.0 PEDESTAL REINFORCING SECTION
½" = 1'-0"

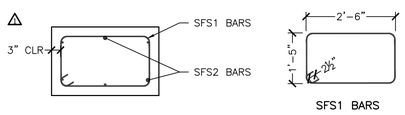

5 S4.0 REINFORCING SECTION
½" = 1'-0"

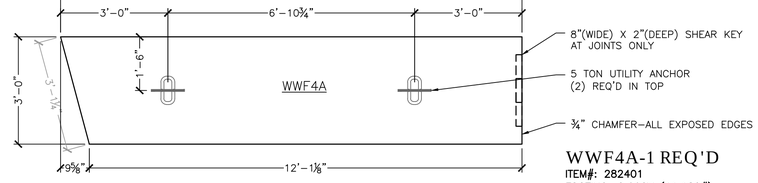

WWF4A-1 REQ'D
ITEM#: 282401
FOOTING: 2.66CY (11,180#)

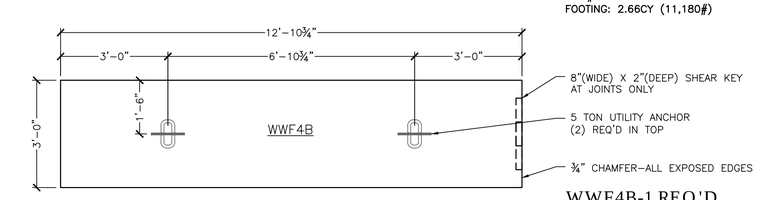

WWF4B-1 REQ'D
ITEM#: 282401
FOOTING: 2.75CY (11,550#)

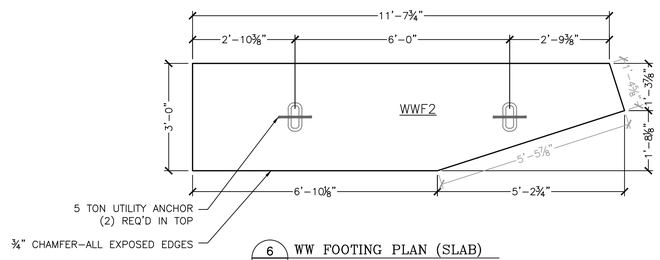

WWF2-1 REQ'D
ITEM#: 282401
FOOTING: 2.24CY (9,410#)

6 S4.0 WW FOOTING PLAN (SLAB)
½" = 1'-0"

WWF1A/WWF1B REINFORCING (COUNTS REFLECT 1 UNIT)					
MARK	QTY	SIZE	SPACING	TYPE	CUT LENGTH
SFS1	18	#4	12"	STIRRUP	8'-1¾"
SFS2	6	#4	AS SHOWN	STRAIGHT	17'-3"

WWF4A REINFORCING					
MARK	QTY	SIZE	SPACING	TYPE	CUT LENGTH
SFS1	13	#4	12"	STIRRUP	8'-1¾"
SFS2	6	#4	AS SHOWN	STRAIGHT	12'-4¾"*

WWF4B REINFORCING					
MARK	QTY	SIZE	SPACING	TYPE	CUT LENGTH
SFS1	13	#4	12"	STIRRUP	8'-1¾"
SFS2	6	#4	AS SHOWN	STRAIGHT	12'-4¾"

WWF2 REINFORCING					
MARK	QTY	SIZE	SPACING	TYPE	CUT LENGTH
SFS1	12	#4	12"	STIRRUP	8'-1¾"
SFS2	6	#4	AS SHOWN	STRAIGHT	11'-2¾"*

NOTE:
- ALL FOOTING STEEL BE BE LEVEL 1 (GRADE 60 EPOXY COATED)
- ALL STEEL TO HAVE 3" CLEAR COVER UNLESS OTHERWISE NOTED

*LONGEST PIECE

WWF1A REINFORCING					
MARK	QTY	SIZE	SPACING	TYPE	CUT LENGTH
PFS1	22	#6	7"	STRAIGHT	5'-6"
PFS2	13	#4	12"	STRAIGHT	5'-6"
PFS3	12	#4	12"	STRAIGHT	12'-5¾"
PFS4	22	#4	7"	"L" BARS	7'-8"
PFS5	10	#4	12"	STRAIGHT	12'-5¾"
PFS6	22	#6	7"	"L" BARS	7'-8"

WWF1B REINFORCING					
MARK	QTY	SIZE	SPACING	TYPE	CUT LENGTH
PFS1	22	#6	7"	STRAIGHT	5'-6"*
PFS2	13	#4	12"	STRAIGHT	5'-6"*
PFS3	12	#4	12"	STRAIGHT	12'-5¾"*
PFS4	20	#4	7"	"L" BARS	7'-8"
PFS5	10	#4	12"	STRAIGHT	12'-5¾"*
PFS6	22	#6	7"	"L" BARS	7'-8"

NOTE:
- ALL FOOTING STEEL BE BE LEVEL 1 (GRADE 60 EPOXY COATED)
- ALL STEEL TO HAVE 3" CLEAR COVER UNLESS OTHERWISE NOTED

*LONGEST PIECE

Vermont Agency of Transportation
RECEIVED
ON: June 3, 2014
and Checked for
CONFORMANCE
BY: Jennifer Fitch DATE: 06/04/2014

SHOP DRAWING REVIEW

☐ REVIEWED AS REQUIRED BY THE CONSTRUCTION CONTRACT DOCUMENTS AND APPROVED, BUT ONLY FOR CONFORMANCE TO THE DESIGN CONCEPT OF THE WORK, AND SUBJECT TO FURTHER LIMITATIONS AND REQUIREMENTS CONTAINED IN THE CONSTRUCTION CONTRACT DOCUMENTS
☐ REJECTED ☒ REVISE AND RESUBMIT ☐ FURNISH AS CORRECTED

CORRECTIONS OR COMMENTS MADE ON THE SHOP DRAWINGS DURING THIS REVIEW DO NOT RELIEVE CONTRACTOR FROM COMPLIANCE WITH REQUIREMENTS OF THE DRAWINGS AND SPECIFICATIONS. THIS CHECK IS ONLY FOR REVIEW OF GENERAL CONFORMANCE WITH THE DESIGN CONCEPT OF THE PROJECT AND GENERAL COMPLIANCE WITH THE INFORMATION GIVEN IN THE CONTRACT DOCUMENTS. THE CONTRACTOR IS RESPONSIBLE FOR: CONFIRMING AND CORRELATING ALL QUANTITIES AND DIMENSIONS; SELECTING FABRICATION PROCESSES AND TECHNIQUES OF CONSTRUCTION; COORDINATING HIS WORK WITH THAT OF ALL OTHER TRADES; AND PERFORMING HIS WORK IN A SAFE AND SATISFACTORY MANNER.

VHB Vanasse Hangen Brustlin, Inc.
7056 US Route 7
North Ferrisburgh, VT 05473
802.425.7788

Job Number 57518.00
Reviewed By: E.A. Fiala
Date 6/3/2014

No.	Date	Revision	By
1	6/2/2014	Revised For constructability (form limitations)	CFP
2	5/9/2014	Revised per VHB Comments 5/7/2014	PJL

MICHIE CORPORATION, INC.
173 BUXTON INDUSTRIAL DRIVE-PO BOX 870
HENNIKER, NH 03242
PHONE: 603-428-3218
FAX: 603-428-7426

VT Route 73 - Bridge 13 (Project # ER STP 0162 (19))
Rochester, VT
28'x10' Archcon - Wingwall Footing Details

Project No. 4653
Date: 12/30/2013
Designed by: Delta
Drawn by: CFP
Checked by: PJL/Delta
Scale: AS SHOWN

Prepared for:
WM Schultz Construction
PO Box 2620
Ballston Spa, NY 12020

DWG NO.
S4.0

CAD FILE: S:\CAD\PROJECTS\4653 - VT ER STP 0162 (19) - 28'x10' ARCHCON WINGWALL FOOTINGS\DWGS\4653-S4.0.DWG LAYOUT: S4.0 PLOTTED ON 6/2/2014 BY: CFP

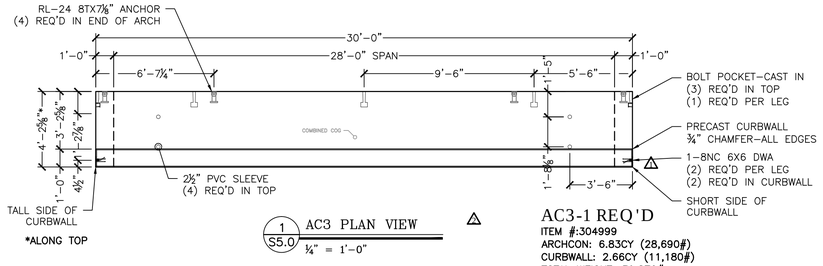

1 S5.0 AC3 PLAN VIEW
¼" = 1'-0"

AC3-1 REQ'D
ITEM #:304999
ARCHCON: 6.83CY (28,690#)
CURBWALL: 2.66CY (11,180#)
TOTAL WEIGHT: 39,870#

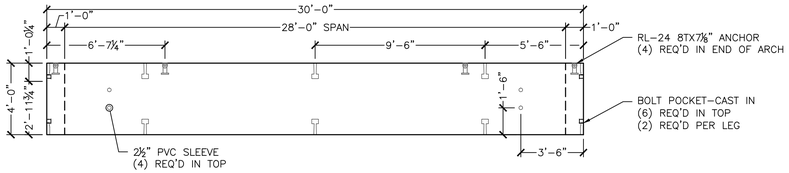

11 S5.0 AC4 PLAN VIEW
¼" = 1'-0"

AC4-1 REQ'D
ITEM #:304999
ARCHCON: 6.83CY (28,690#)

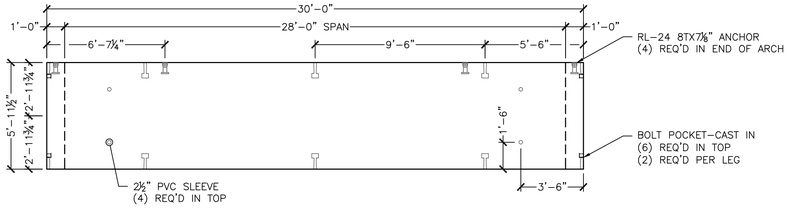

3 S5.0 AC2 PLAN VIEW
¼" = 1'-0"

AC2-17 REQ'D
ITEM #:304999
ARCHCON: 10.18CY (42,750#)

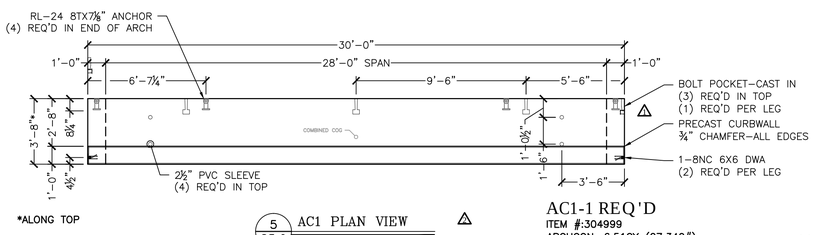

5 S5.0 AC1 PLAN VIEW
¼" = 1'-0"

AC1-1 REQ'D
ITEM #:304999
ARCHCON: 6.51CY (27,340#)
CURBWALL: 1.98CY (8,320#)
TOTAL WEIGHT: 35,660#

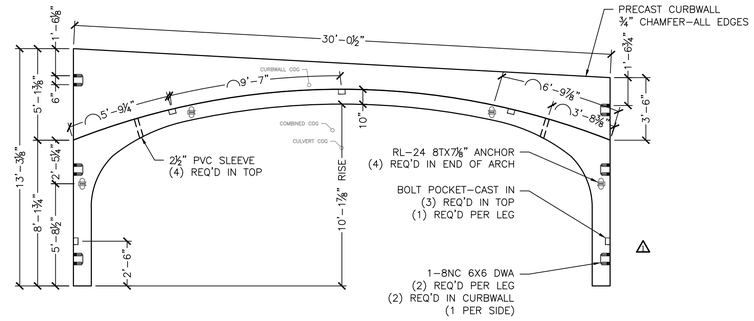

2 S5.0 AC3 ELEVATION
¼" = 1'-0" (Looking @ Stream side)

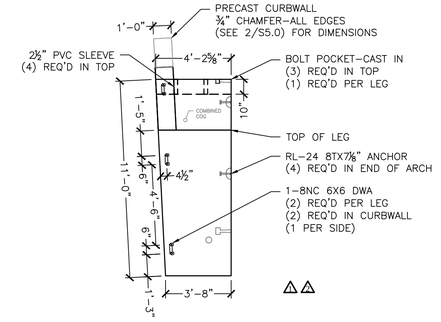

9 S5.0 AC3 SIDE ELEVATION
¼" = 1'-0"

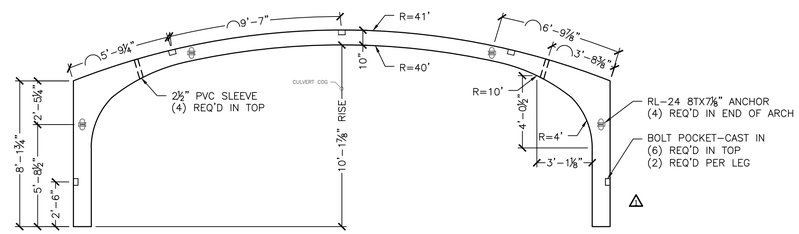

4 S5.0 AC2 ELEVATION
¼" = 1'-0"

AC4 Elevation Similar?

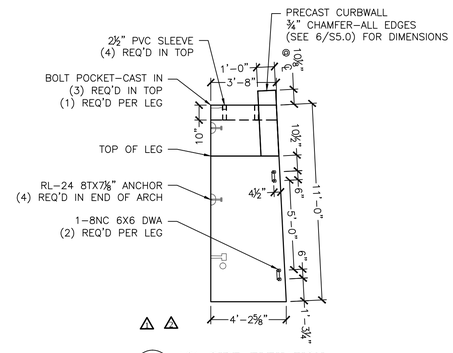

10 S5.0 AC1 SIDE ELEVATION
¼" = 1'-0"

*NOTE:
SPLAY REINFORCING IN PLUMBED ENDS SECTIONS
AND MAINTAIN MAXIMUM BAR SPACING.

AC1 REINFORCING SCHEDULE (COUNTS REFLECT 1 UNIT)						
LOCATION	MARK	QTY	SIZE	SPACING	TYPE	CUT LENGTH
DECK (INT)	*A1	11	#8	4"	CURVED	22'-0"
DECK/LEG (INT)	*A2	8	#4	12"	"L" BARS	6'-6"
DECK/LEG (EXT)	*A3	22	#7	4"	"L" BARS	16'-8¼"
DECK (EXT)	*A4	6	#7	8"	CURVED	21'-8"
DECK/LEG (INT)	*A5	22	#6	4"	CURVED	13'-8½"
LONGIT. LEG	A6	32	#4	12"	STRAIGHT	VARIES 3'-4" TO 3'-10⅝"
LONGIT. DECK (EXT)	A7	21	#4	12"	STRAIGHT	3'-4"
LONGIT. DECK (INT)	A8	44	#5	8"	STRAIGHT	3'-4"
DECK	DB1	44	#5	8"	DB SPLICER	2'-0"
DECK	DB2	22	#4	16"	DB SPLICER	2'-0"

AC1 CURBWALL REINFORCING SCHEDULE						
LOCATION	MARK	QTY	SIZE	SPACING	TYPE	CUT LENGTH
CURBWALL	CW1	44	#5	8"	STR	3'-3" L.P. CUT TO FIT
CURBWALL	CW2	22	#4	16"	STR	3'-3" L.P. CUT TO FIT
CURBWALL	CW3	6	#4	12"	STR	29'-8" L.P.

AC4 REINFORCING SCHEDULE (COUNTS REFLECT 1 UNIT)						
LOCATION	MARK	QTY	SIZE	SPACING	TYPE	CUT LENGTH
DECK (INT)	A1	12	#8	4"	CURVED	22'-0"
DECK/LEG (INT)	A2	8	#4	12"	"L" BARS	6'-6"
DECK/LEG (EXT)	A3	24	#7	4"	"L" BARS	16'-8¼"
DECK (EXT)	A4	6	#7	8"	CURVED	21'-8"
DECK/LEG (INT)	A5	24	#6	4"	CURVED	13'-8½"
LONGIT. LEG	A6	32	#4	12"	STRAIGHT	3'-8"
LONGIT. DECK (EXT)	A7	21	#4	12"	STRAIGHT	3'-8"
LONGIT. DECK (INT)	A8	44	#5	8"	STRAIGHT	3'-8"

AC2 REINFORCING SCHEDULE (COUNTS REFLECT 1 UNIT)						
LOCATION	MARK	QTY	SIZE	SPACING	TYPE	CUT LENGTH
DECK (INT)	A1	18	#8	4"	CURVED	22'-0"
DECK/LEG (INT)	A2	12	#4	12"	"L" BARS	6'-6"
DECK/LEG (EXT)	A3	36	#7	4"	"L" BARS	16'-8¼"
DECK (EXT)	A4	9	#7	8"	CURVED	21'-8"
DECK/LEG (INT)	A5	36	#6	4"	CURVED	13'-8½"
LONGIT. LEG	A6	32	#4	12"	STRAIGHT	5'-7½"
LONGIT. DECK (EXT)	A7	21	#4	12"	STRAIGHT	5'-7½"
LONGIT. DECK (INT)	A8	44	#5	8"	STRAIGHT	5'-7½"

AC3 REINFORCIN	
LOCATION	MARK
DECK (INT)	*A1
DECK/LEG (INT)	*A2
DECK/LEG (EXT)	*A3
DECK (EXT)	*A4
DECK/LEG (INT)	*A5
LONGIT. LEG	A6
LONGIT. DECK (EXT)	A7
LONGIT. DECK (INT)	A8
DECK	DB1
DECK	DB2

AC3 CUI	
LOCATION	MARK
CURBWALL	CW1
CURBWALL	CW2
CURBWALL	CW3

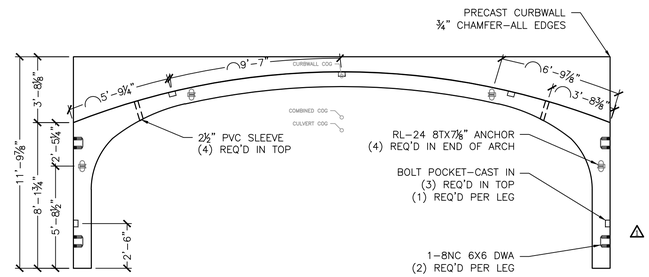

6 S5.0 AC1 ELEVATION
¼" = 1'-0" (Looking @ Stream side)

Vermont Agency of Transportation
RECEIVED
ON: June 3, 2014
and Checked for
CONFORMANCE
BY: Jennifer Fitch DATE: 06/04/2014

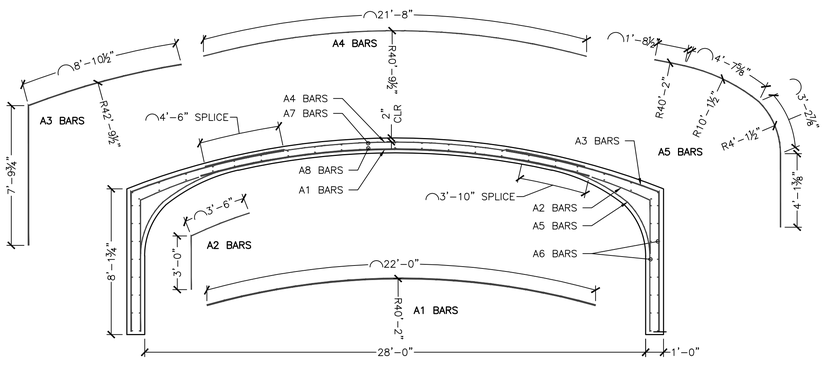

NOTE:
ALL CONC. COVER
TO BE 1½" U.N.O.

7 S5.0 (TYP) REINFORCING SECTION
¼" = 1'-0"

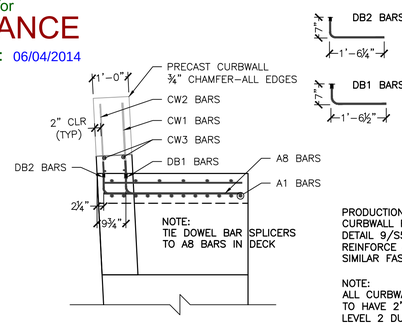

PRODUCTION NOTE:
CURBWALL FOR AC3 SHOWN IN DETAIL 9/S5.0 FABRICATE AND REINFORCE AC1 CURBWALL IN A SIMILAR FASHION

NOTE:
ALL CURBWALL REINFORCING TO HAVE 2" COVER AND BE LEVEL 2 DUAL COATED

8 S3.0 (TYP) CURBWALL REINFORCING
½" = 1'-0"

SHOP DRAWING REVIEW

☐ REVIEWED AS REQUIRED BY THE CONSTRUCTION CONTRACT DOCUMENTS AND APPROVED, BUT ONLY FOR CONFORMANCE TO THE DESIGN CONCEPT OF THE WORK, AND SUBJECT TO FURTHER LIMITATIONS AND REQUIREMENTS CONTAINED IN THE CONSTRUCTION CONTRACT DOCUMENTS.
☐ REJECTED ☒ REVISE AND RESUBMIT ☐ FURNISH AS CORRECTED

CORRECTIONS OR COMMENTS MADE ON THE SHOP DRAWINGS DURING THIS REVIEW DO NOT RELIEVE CONTRACTOR FROM COMPLIANCE WITH REQUIREMENTS OF THE DRAWINGS AND SPECIFICATIONS. THIS CHECK IS ONLY FOR REVIEW OF GENERAL CONFORMANCE WITH THE DESIGN CONCEPT OF THE PROJECT AND GENERAL COMPLIANCE WITH THE INFORMATION GIVEN IN THE CONTRACT DOCUMENTS. THE CONTRACTOR IS RESPONSIBLE FOR: CONFIRMING AND CORRELATING ALL QUANTITIES AND DIMENSIONS; SELECTING FABRICATION PROCESSES AND TECHNIQUES OF CONSTRUCTION; COORDINATING HIS WORK WITH THAT OF ALL OTHER TRADES; AND PERFORMING HIS WORK IN A SAFE AND SATISFACTORY MANNER.

VHB Vanasse Hangen Brustlin, Inc.
7056 US Route 7
North Ferrisburgh, VT 05473
802.425.7788

Job Number: 57518.00
Reviewed By: E.A. Fiala
Date: 6/3/2014

No.	Date	Revision	By
1	6/2/2014	Revised For constructability (form limitations)	CFP
2	5/8/2014	Revised per VHB Comments 5/7/2014	PJL

MICHIE CORPORATION, INC.
173 BUXTON INDUSTRIAL DRIVE-PO BOX 870
HENNIKER, NH 03242
PHONE: 603-428-3218
FAX: 603-428-7426

VT Route 73 - Bridge 13 (Project # ER STP 0162 (19))
Rochester, VT
28'x10' Archcon - Archcon Details

Project No. 4653
Date: 4/2/2014
Designed by: Delta
Drawn by: CFP
Checked by: PJL/Delta
Scale: AS SHOWN

Prepared for:
WM Schultz Construction
PO Box 2620
Ballston Spa, NY 12020

DWG NO.
S5.0

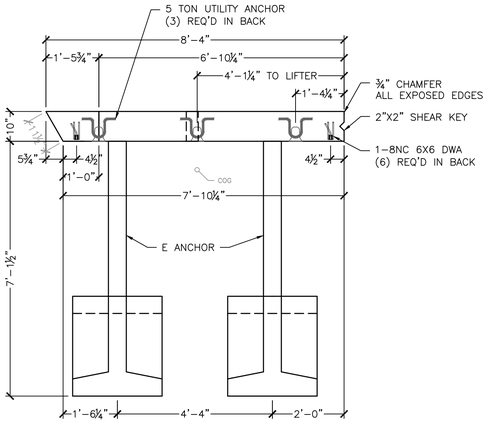

1 S6.0 WW1A PLAN VIEW
½" = 1'-0"

WW1A-1 REQ'D
ITEM #:275602
WALL PANEL: 3.23CY (13,570#)
ANCHOR: .61CY (2,560#)
TOTAL WEIGHT: 16,130#

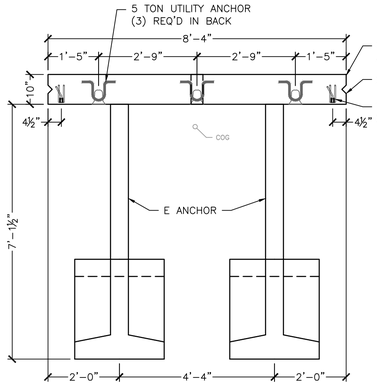

3 S6.0 WW1B PLAN VIEW
½" = 1'-0"

WW1B-1 REQ'D
ITEM #:275602
WALL PANEL: 3.50CY (14,700#)
ANCHOR: .61CY (2,560#)
TOTAL WEIGHT: 17,260#

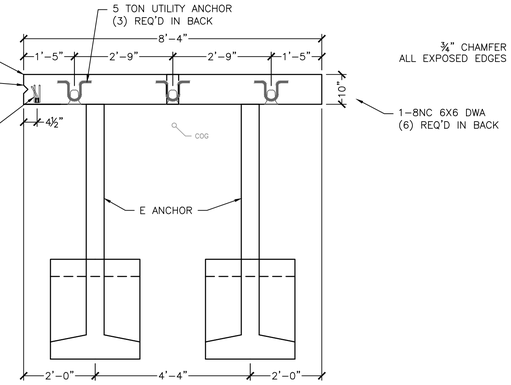

5 S6.0 WW1C PLAN VIEW
½" = 1'-0"

WW1C-1 REQ'D
ITEM #:275602
WALL PANEL: 3.69CY (15,500#)
ANCHOR: .61CY (2,560#)
TOTAL WEIGHT: 18,060#

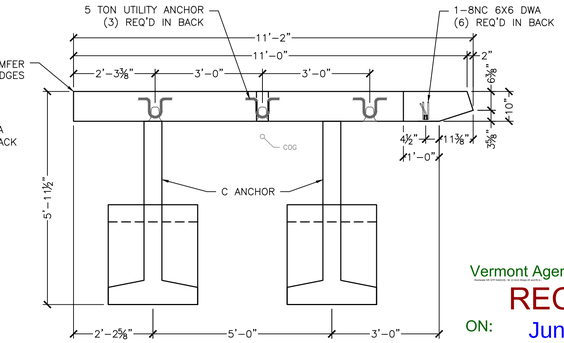

7 S6.0 WW2 PLAN VIEW
½" = 1'-0"

WW2-1 REQ'D
ITEM #:275602
WALL PANEL: 3.87CY (16,250#)
ANCHOR: .48CY (2,020#)
TOTAL WEIGHT: 20,290#

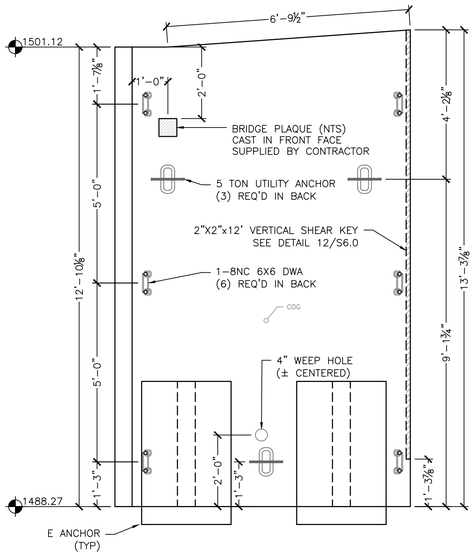

2 S6.0 WW1A ELEVATION VIEW
½" = 1'-0"

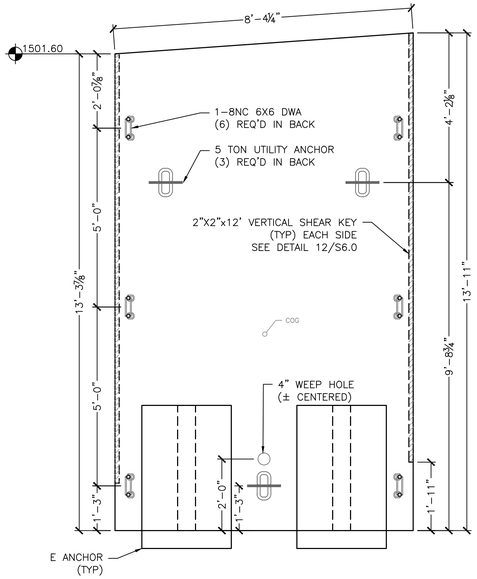

4 S6.0 WW1B ELEVATION VIEW
½" = 1'-0"

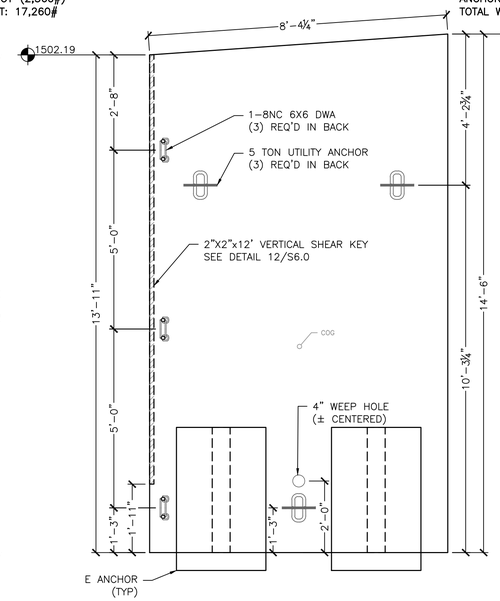

6 S6.0 WW1C ELEVATION VIEW
½" = 1'-0"

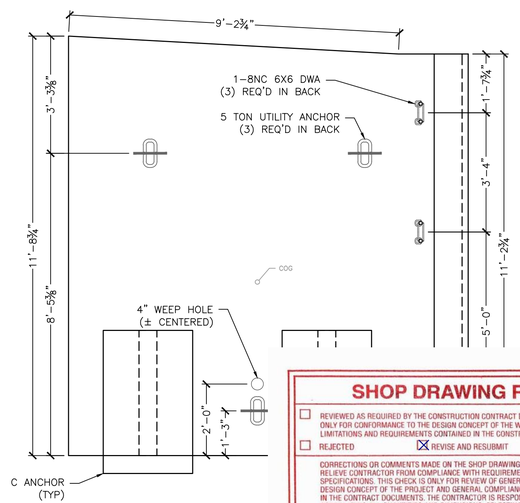

8 S6.0 WW2 ELEV
½" = 1'-0"

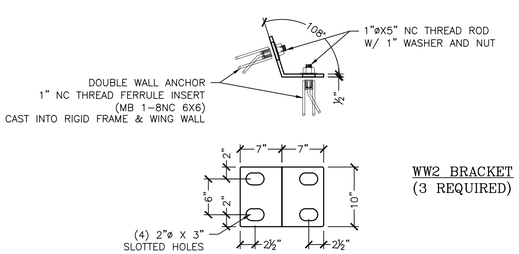

WW2 BRACKET
(3 REQUIRED)

PLATES TO BE MADE OF ½" MILD STEEL, PLASMA CUT, AND BENT AS REQUIRED. (HOT DIPPED GALVANIZED AFTER BENDING)

9 S6.0 WINGWALL BRACKET DETAIL
1" = 1'-0"

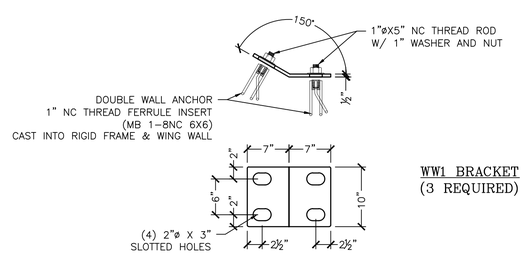

WW1 BRACKET
(3 REQUIRED)

PLATES TO BE MADE OF ½" MILD STEEL, PLASMA CUT, AND BENT AS REQUIRED. (HOT DIPPED GALVANIZED AFTER BENDING)

10 S6.0 WINGWALL BRACKET DETAIL
1" = 1'-0"

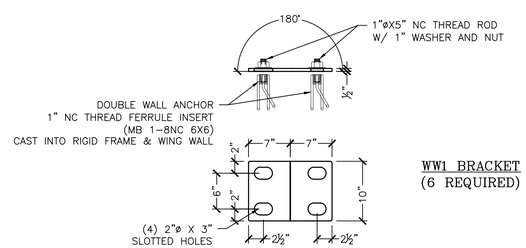

WW1 BRACKET
(6 REQUIRED)

PLATES TO BE MADE OF ½" MILD STEEL, PLASMA CUT, AND BENT AS REQUIRED. (HOT DIPPED GALVANIZED AFTER BENDING)

11 S6.0 WINGWALL BRACKET DETAIL
1" = 1'-0"

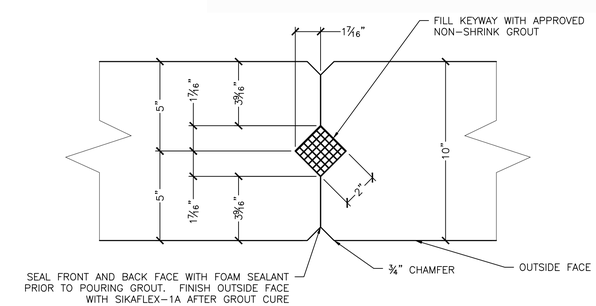

12 S6.0 WINGWALL VERTICAL KEYWAY DETAIL
3" = 1'-0"

Vermont Agency of Transportation
RECEIVED
ON: June 3, 2014
and Checked for
CONFORMANCE
BY: Jennifer Fitch DATE: 06/04/2014

SHOP DRAWING REVIEW

☐ REVIEWED AS REQUIRED BY THE CONSTRUCTION CONTRACT DOCUMENTS AND APPROVED, BUT ONLY FOR CONFORMANCE TO THE DESIGN CONCEPT OF THE WORK, AND SUBJECT TO FURTHER LIMITATIONS AND REQUIREMENTS CONTAINED IN THE CONSTRUCTION CONTRACT DOCUMENTS.
☐ REJECTED ☒ REVISE AND RESUBMIT ☐ FURNISH AS CORRECTED

CORRECTIONS OR COMMENTS MADE ON THE SHOP DRAWINGS DURING THIS REVIEW DO NOT RELIEVE CONTRACTOR FROM COMPLIANCE WITH REQUIREMENTS OF THE DRAWINGS AND SPECIFICATIONS. THIS CHECK IS ONLY FOR REVIEW OF GENERAL CONFORMANCE WITH THE DESIGN CONCEPT OF THE PROJECT AND GENERAL COMPLIANCE WITH THE INFORMATION GIVEN IN THE CONTRACT DOCUMENTS. THE CONTRACTOR IS RESPONSIBLE FOR: CONFIRMING AND CORRELATING ALL QUANTITIES AND DIMENSIONS; SELECTING FABRICATION PROCESSES AND TECHNIQUES OF CONSTRUCTION; COORDINATING HIS WORK WITH THAT OF ALL OTHER TRADES; AND PERFORMING HIS WORK IN A SAFE AND SATISFACTORY MANNER.

VHB Vanasse Hangen Brustlin, Inc.
7056 US Route 7
North Ferrisburgh, VT 05473
802.425.7788

Job Number 57518.00
Reviewed By: E.A. Fiala
Date 6/3/2014

No.	Date	Revision	By
1	6/2/2014	Revised For constructability (form limitations)	CFP
2	5/9/2014	Revised per VHB Comments 5/7/2014	PJL

MICHIE CORPORATION, INC.
173 BUXTON INDUSTRIAL DRIVE-PO BOX 870
HENNIKER, NH 03242
PHONE: 603-428-3218
FAX: 603-428-7426

VT Route 73 - Bridge 13 (Project # ER STP 0162 (19))
Rochester, VT
28'x10' Archcon - WW1 & WW2 Details

Scale: AS SHOWN
Checked by: PJL/Delta
Drawn by: CFP
Designed by: Delta
Project No. 4653
Date: 4/2/2014

Prepared for:
WM Schultz Construction
PO Box 2620
Ballston Spa, NY 12020

DWG NO.
S6.0

C:\PROJECTS\SCHULTZ CONSTRUCTION\ROCHESTER, VT - RT 13 VRANDS ER STP 0162 (19)\DWGS\AC_28x10 SCHULTZ 4653 REV 06 02 14.DWG 6/2/2014 10:09 AM

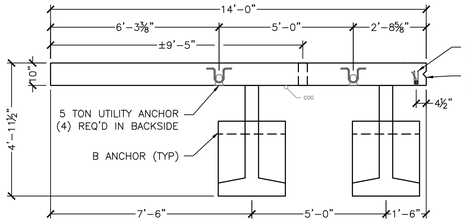

1 S7.0 WW3C PLAN VIEW
⅜" = 1'-0"

WW3C-1 REQ'D
ITEM #:275602
WALL PANEL: 2.12CY (8,900#)
ANCHOR: .41CY (1,720#)
TOTAL WEIGHT: 10,620#

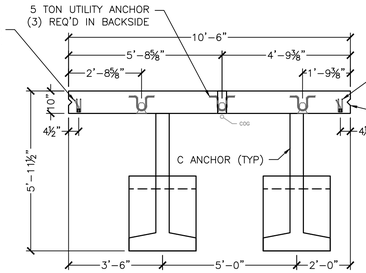

3 S7.0 WW3B PLAN VIEW
⅜" = 1'-0"

WW3B-1 REQ'D
ITEM #:275602
WALL PANEL: 3.15CY (13,230#)
ANCHOR: .48CY (2,020#)
TOTAL WEIGHT: 15,250#

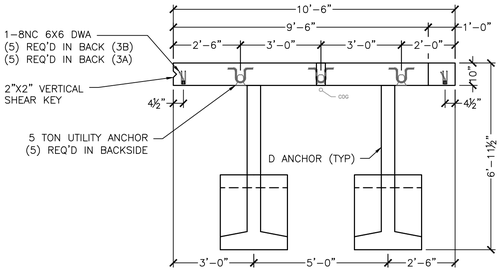

5 S7.0 WW3A PLAN VIEW
⅜" = 1'-0"

WW3A-1 REQ'D
ITEM #:275602
WALL PANEL: 4.48CY (18,820#)
ANCHOR: .54CY (2,270#)
TOTAL WEIGHT: 21,090#

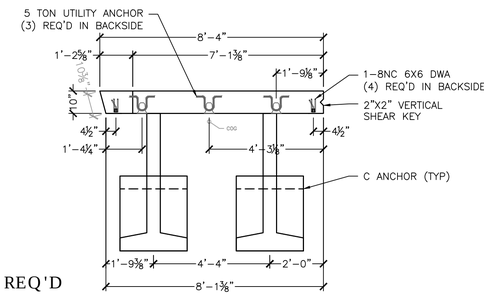

7 S7.0 WW4A PLAN VIEW
⅜" = 1'-0"

WW4A-1 REQ'D
ITEM #:275602
WALL PANEL: 2.10CY (8,820#)
ANCHOR: .48CY (2,020#)
TOTAL WEIGHT: 10,840#

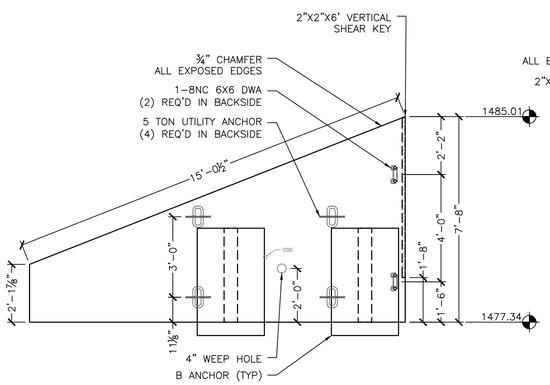

2 S7.0 WW3C ELEVATION VIEW
⅜" = 1'-0" (Looking @ backside)

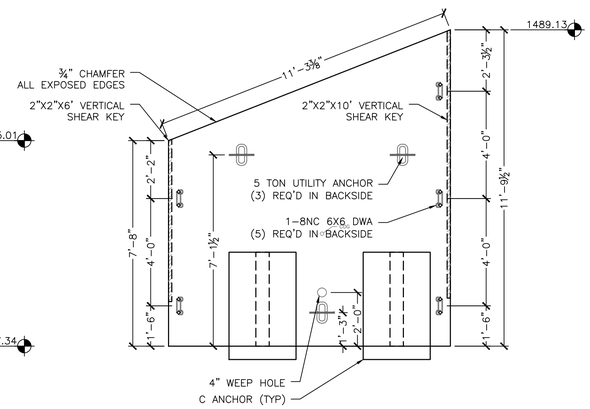

4 S7.0 WW3B ELEVATION VIEW
⅜" = 1'-0" (Looking @ backside)

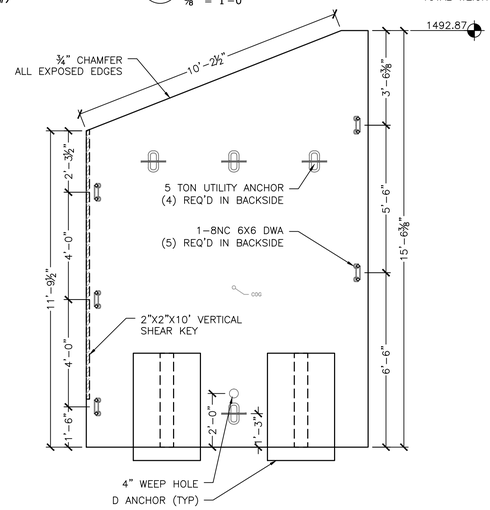

6 S7.0 WW3A ELEVATION VIEW
⅜" = 1'-0" (Looking @ backside)

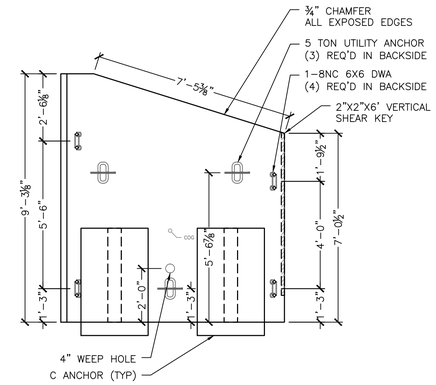

8 S7.0 WW4A ELEVATION VIEW
⅜" = 1'-0" (Looking @ backside)

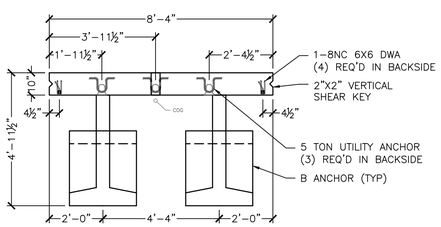

9 S7.0 WW4B PLAN VIEW
⅜" = 1'-0"

WW4B-1 REQ'D
ITEM #:275602
WALL PANEL: 1.48CY (6,220#)
ANCHOR: .41CY (1,720#)
TOTAL WEIGHT: 7,940#

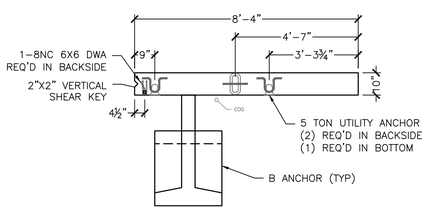

11 S7.0 WW4C PLAN VIEW
⅜" = 1'-0"

WW4C-1 REQ'D
ITEM #:275602
WALL PANEL: .81CY (3,400#)
ANCHOR: .41CY (1,720#)
TOTAL WEIGHT: 5,120#

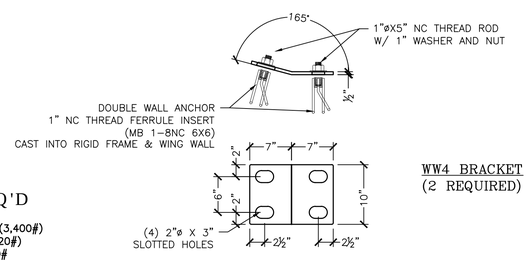

WW4 BRACKET
(2 REQUIRED)

PLATES TO BE MADE OF ½" MILD STEEL, PLASMA CUT, AND BENT AS REQUIRED. (HOT DIPPED GALVANIZED AFTER BENDING)

13 S7.0 WINGWALL BRACKET DETAIL
1" = 1'-0"

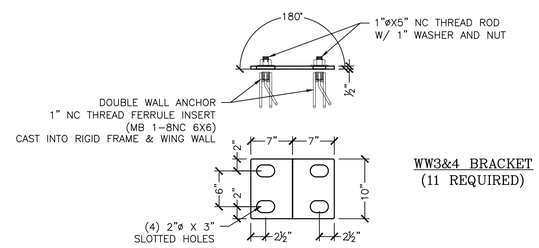

WW3&4 BRACKET
(11 REQUIRED)

PLATES TO BE MADE OF ½" MILD STEEL, PLASMA CUT, AND BENT AS REQUIRED. (HOT DIPPED GALVANIZED AFTER BENDING)

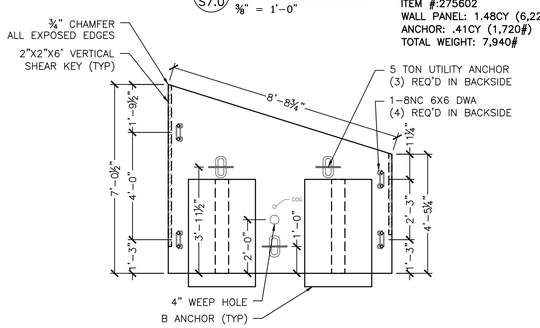

10 S7.0 WW4B ELEVATION VIEW
⅜" = 1'-0" (Looking @ backside)

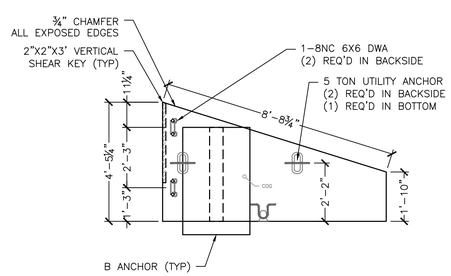

12 S7.0 WW4C ELEVATION VIEW
⅜" = 1'-0" (Looking @ backside)

Vermont Agency of Transportation

RECEIVED
ON: June 3, 2014
and Checked for
CONFORMANCE
BY: Jennifer Fitch DATE: 06/04/2014

SHOP DRAWING REVIEW

☐ REVIEWED AS REQUIRED BY THE CONSTRUCTION CONTRACT DOCUMENTS AND APPROVED, BUT ONLY FOR CONFORMANCE TO THE DESIGN CONCEPT OF THE WORK, AND SUBJECT TO FURTHER LIMITATIONS AND REQUIREMENTS CONTAINED IN THE CONSTRUCTION CONTRACT DOCUMENTS.
☐ REJECTED ☒ REVISE AND RESUBMIT ☐ FURNISH AS CORRECTED

CORRECTIONS OR COMMENTS MADE ON THE SHOP DRAWINGS DURING THIS REVIEW DO NOT RELIEVE CONTRACTOR FROM COMPLIANCE WITH REQUIREMENTS OF THE DRAWINGS AND SPECIFICATIONS. THIS CHECK IS ONLY FOR REVIEW OF GENERAL CONFORMANCE WITH THE DESIGN CONCEPT OF THE PROJECT AND GENERAL COMPLIANCE WITH THE INFORMATION GIVEN IN THE CONTRACT DOCUMENTS. THE CONTRACTOR IS RESPONSIBLE FOR: CONFIRMING AND CORRELATING ALL QUANTITIES AND DIMENSIONS; SELECTING FABRICATION PROCESSES AND TECHNIQUES OF CONSTRUCTION; COORDINATING HIS WORK WITH THAT OF ALL OTHER TRADES; AND PERFORMING HIS WORK IN A SAFE AND SATISFACTORY MANNER.

VHB Vanasse Hangen Brustlin, Inc.
7056 US Route 7
North Ferrisburgh, VT 05473
802.425.7788

Job Number 57518.00
Reviewed By: E.A. Fiala
Date: 6/3/2014

No.	Date	Revision	By
1	6/2/2014	Revised For constructability (form limitations)	CFP
2	XX/XX/XXXX	XX	XXX

MICHIE CORPORATION, INC.
173 BUXTON INDUSTRIAL DRIVE-PO BOX 870
HENNIKER, NH 03242
PHONE: 603-428-3218
FAX: 603-428-7426

VT Route 73 - Bridge 13 (Project # ER STP 0162 (19))
Rochester, VT
28'x10' Archcon - WW3 & WW4 Details

Scale: AS SHOWN
Checked by: PJL/Delta
Drawn by: CFP
Designed by: Delta
Date: 4/2/2014
Project No. 4653

Prepared for:
WM Schultz Construction
PO Box 2620
Ballston Spa, NY 12020

DWG NO.
S7.0

C:\PROJECTS\SCHULTZ CONSTRUCTION\ROCHESTER, VT - RT 13 VTRANS ER STP 0162 (19)\DWGS\VT 28x10 SCHULTZ 4653 REV 06 02 14.DWG 6/2/2014 10:00 AM

NOTE: BAR COUNTS REPRESENT 1 UNIT.

WW1A REINFORCING SCHEDULE					
BAR MARK	LOCATION	TYPE	SIZE/SPACING	CUT LENGTH	# OF PCS
VERTICAL	OSF	STRAIGHT	#4 @ 12"	13'-0" TO 12'-6¼"	8
VERTICAL	ISF	STRAIGHT	#6 @ 7"	13'-0" TO 12'-6¼"	14
HORIZONTAL	OSF	STRAIGHT	#4 @ 12"	8'-0"	13
HORIZONTAL	ISF	STRAIGHT	#4 @ 12"	7'-6"	13
DIAGONAL	FOLLOW SLOPE	STRAIGHT	#4	6'-9"	2
WW1B REINFORCING SCHEDULE					
BAR MARK	LOCATION	TYPE	SIZE/SPACING	CUT LENGTH	# OF PCS
VERTICAL	OSF	STRAIGHT	#4 @ 12"	13'-7" TO 13'-0"	8
VERTICAL	ISF	STRAIGHT	#6 @ 7"	13'-7" TO 13'-0"	14
HORIZONTAL	OSF	STRAIGHT	#4 @ 12"	8'-0"	14
HORIZONTAL	ISF	STRAIGHT	#4 @ 12"	8'-0"	14
DIAGONAL	FOLLOW SLOPE	STRAIGHT	#4	8'-0"	2
WW1C REINFORCING SCHEDULE					
BAR MARK	LOCATION	TYPE	SIZE/SPACING	CUT LENGTH	# OF PCS
VERTICAL	OSF	STRAIGHT	#4 @ 12"	14'-2" TO 13'-7"	8
VERTICAL	ISF	STRAIGHT	#6 @ 7"	14'-2" TO 13'-7"	14
HORIZONTAL	OSF	STRAIGHT	#4 @ 12"	8'-0"	14
HORIZONTAL	ISF	STRAIGHT	#4 @ 12"	8'-0"	14
DIAGONAL	FOLLOW SLOPE	STRAIGHT	#4	8'-0"	2
WW2 REINFORCING SCHEDULE					
BAR MARK	LOCATION	TYPE	SIZE/SPACING	CUT LENGTH	# OF PCS
VERTICAL	OSF	STRAIGHT	#4 @ 12"	11'-4¾" TO 10'-10¾"	10
VERTICAL	ISF	STRAIGHT	#5 @ 8"	11'-4¾" TO 10'-10¾"	17
HORIZONTAL	OSF	STRAIGHT	#4 @ 12"	10'-8"	11
HORIZONTAL	ISF	STRAIGHT	#4 @ 12"	10'-8"	11
DIAGONAL	FOLLOW SLOPE	STRAIGHT	#4	9'-2"	2
WW3C REINFORCING SCHEDULE					
BAR MARK	LOCATION	TYPE	SIZE/SPACING	CUT LENGTH	# OF PCS
VERTICAL	OSF	STRAIGHT	#4 @ 12"	7'-4" TO 1'-10"	14
VERTICAL	ISF	STRAIGHT	#5 @ 8"	7'-4" TO 1'-10"	21
HORIZONTAL	OSF	STRAIGHT	#4 @ 8"	13'-8"	11
HORIZONTAL	ISF	STRAIGHT	#4 @ 8"	13'-8"	11
DIAGONAL	FOLLOW SLOPE	STRAIGHT	#4	14'-8"	2
WW3B REINFORCING SCHEDULE					
BAR MARK	LOCATION	TYPE	SIZE/SPACING	CUT LENGTH	# OF PCS
VERTICAL	OSF	STRAIGHT	#4 @ 12"	11'-5½" TO 7'-4"	11
VERTICAL	ISF	STRAIGHT	#5 @ 8"	11'-5½" TO 7'-4"	16
HORIZONTAL	OSF	STRAIGHT	#4 @ 12"	10'-2"	12
HORIZONTAL	ISF	STRAIGHT	#4 @ 12"	10'-2"	12
DIAGONAL	FOLLOW SLOPE	STRAIGHT	#4	10'-11	2
WW3A REINFORCING SCHEDULE					
BAR MARK	LOCATION	TYPE	SIZE/SPACING	CUT LENGTH	# OF PCS
VERTICAL	OSF	STRAIGHT	#4 @ 12"	15'-2⅜" TO 11'-5½"	11
VERTICAL	ISF	STRAIGHT	#5 @ 8"	15'-2⅜" TO 11'-5½"	16
HORIZONTAL	OSF	STRAIGHT	#4 @ 12"	10'-2"	15
HORIZONTAL	ISF	STRAIGHT	#4 @ 12"	10'-2"	15
DIAGONAL	FOLLOW SLOPE	STRAIGHT	#4	10'-2"	2

WW4A REINFORCING SCHEDULE					
BAR MARK	LOCATION	TYPE	SIZE/SPACING	CUT LENGTH	# OF PCS
VERTICAL	OSF	STRAIGHT	#4 @ 12"	8'-11" TO 6'-8½"	8
VERTICAL	ISF	STRAIGHT	#4 @ 10"	8'-11" TO 6'-8½"	10
HORIZONTAL	OSF	STRAIGHT	#4 @ 12"	8'-0"	9
HORIZONTAL	ISF	STRAIGHT	#4 @ 12"	7'-9¼"	9
DIAGONAL	FOLLOW SLOPE	STRAIGHT	#4	7'-5"	2
WW4B REINFORCING SCHEDULE					
BAR MARK	LOCATION	TYPE	SIZE/SPACING	CUT LENGTH	# OF PCS
VERTICAL	OSF	STRAIGHT	#4 @ 12"	6'-8½" TO 4'-1¼"	8
VERTICAL	ISF	STRAIGHT	#4 @ 10"	6'-8½" TO 4'-1¼"	10
HORIZONTAL	OSF	STRAIGHT	#4 @ 12"	8'-0"	7
HORIZONTAL	ISF	STRAIGHT	#4 @ 12"	8'-0"	7
DIAGONAL	FOLLOW SLOPE	STRAIGHT	#4	8'-4"	2
WW4C REINFORCING SCHEDULE					
BAR MARK	LOCATION	TYPE	SIZE/SPACING	CUT LENGTH	# OF PCS
VERTICAL	OSF	STRAIGHT	#4 @ 12"	4'-1¼" TO 1'-6"	8
VERTICAL	ISF	STRAIGHT	#4 @ 10"	4'-1¼" TO 1'-6"	10
HORIZONTAL	OSF	STRAIGHT	#4 @ 8"	8'-0"	7
HORIZONTAL	ISF	STRAIGHT	#4 @ 8"	8'-0"	7
DIAGONAL	FOLLOW SLOPE	STRAIGHT	#4	8'-4"	2

SHOP DRAWING REVIEW

☐ REVIEWED AS REQUIRED BY THE CONSTRUCTION CONTRACT DOCUMENTS AND APPROVED, BUT ONLY FOR CONFORMANCE TO THE DESIGN CONCEPT OF THE WORK, AND SUBJECT TO FURTHER LIMITATIONS AND REQUIREMENTS CONTAINED IN THE CONSTRUCTION CONTRACT DOCUMENTS.

☐ REJECTED ☒ REVISE AND RESUBMIT ☐ FURNISH AS CORRECTED

CORRECTIONS OR COMMENTS MADE ON THE SHOP DRAWINGS DURING THIS REVIEW DO NOT RELIEVE CONTRACTOR FROM COMPLIANCE WITH REQUIREMENTS OF THE DRAWINGS AND SPECIFICATIONS. THIS CHECK IS ONLY FOR REVIEW OF GENERAL CONFORMANCE WITH THE DESIGN CONCEPT OF THE PROJECT AND GENERAL COMPLIANCE WITH THE INFORMATION GIVEN IN THE CONTRACT DOCUMENTS. THE CONTRACTOR IS RESPONSIBLE FOR; CONFIRMING AND CORRELATING ALL QUANTITIES AND DIMENSIONS; SELECTING FABRICATION PROCESSES AND TECHNIQUES OF CONSTRUCTION; COORDINATING HIS WORK WITH THAT OF ALL OTHER TRADES; AND PERFORMING HIS WORK IN A SAFE AND SATISFACTORY MANNER.

VHB *Vanasse Hangen Brustlin, Inc.*
7056 US Route 7
North Ferrisburgh, VT 05473
802.425.7788

Job Number: 57518.00
Reviewed By: E.A. Fiala
Date: 6/3/2014

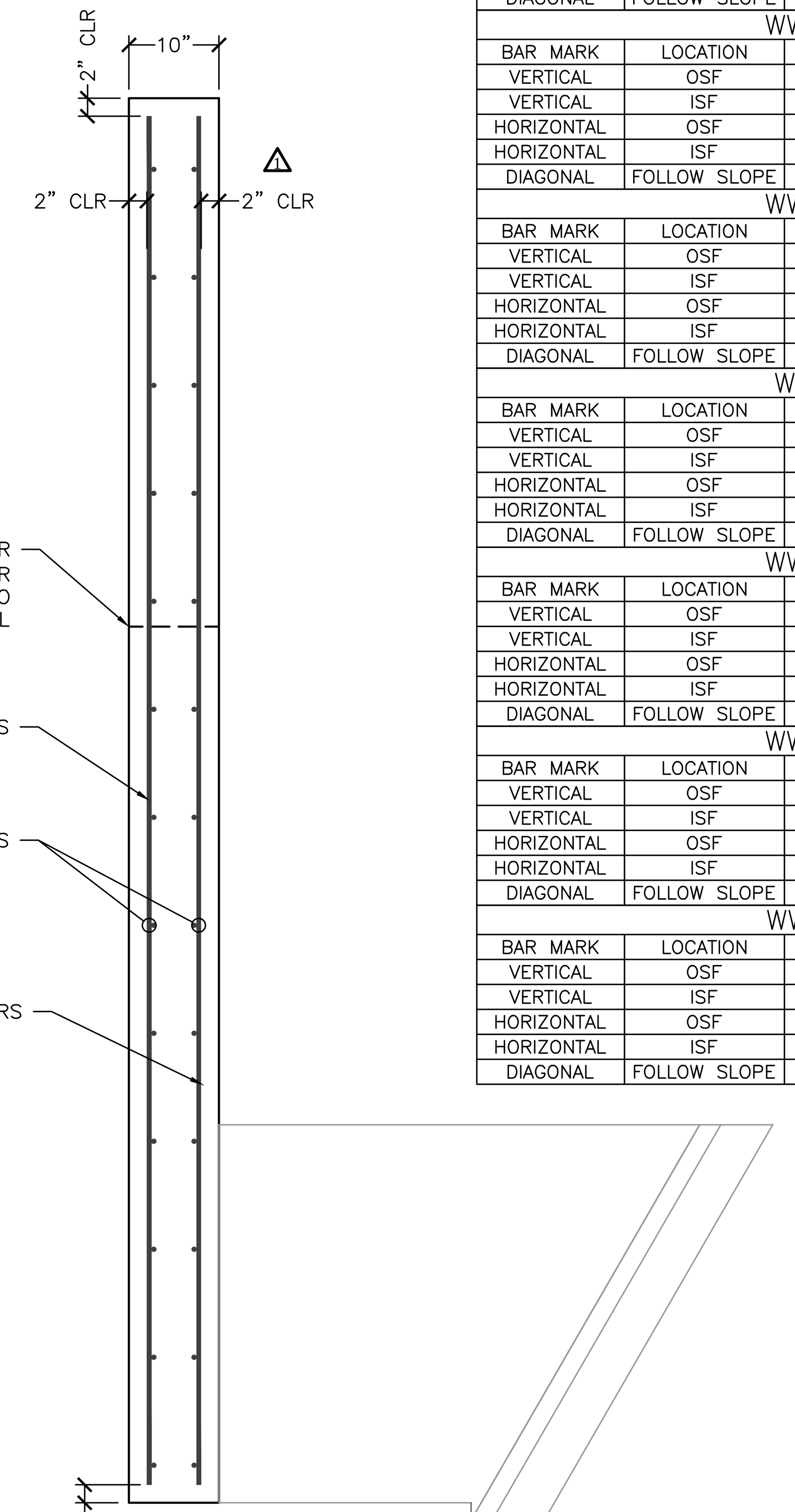

1 S8.0 WINGWALL REINFORCING (TYP)
¾" = 1'-0"

Vermont Agency of Transportation
Rochester ER STP 0162(19) - Br 13 Arch Shops (R and R) 6-
RECEIVED
ON: June 3, 2014
and Checked for
CONFORMANCE
BY: Jennifer Fitch DATE: 06/04/2014

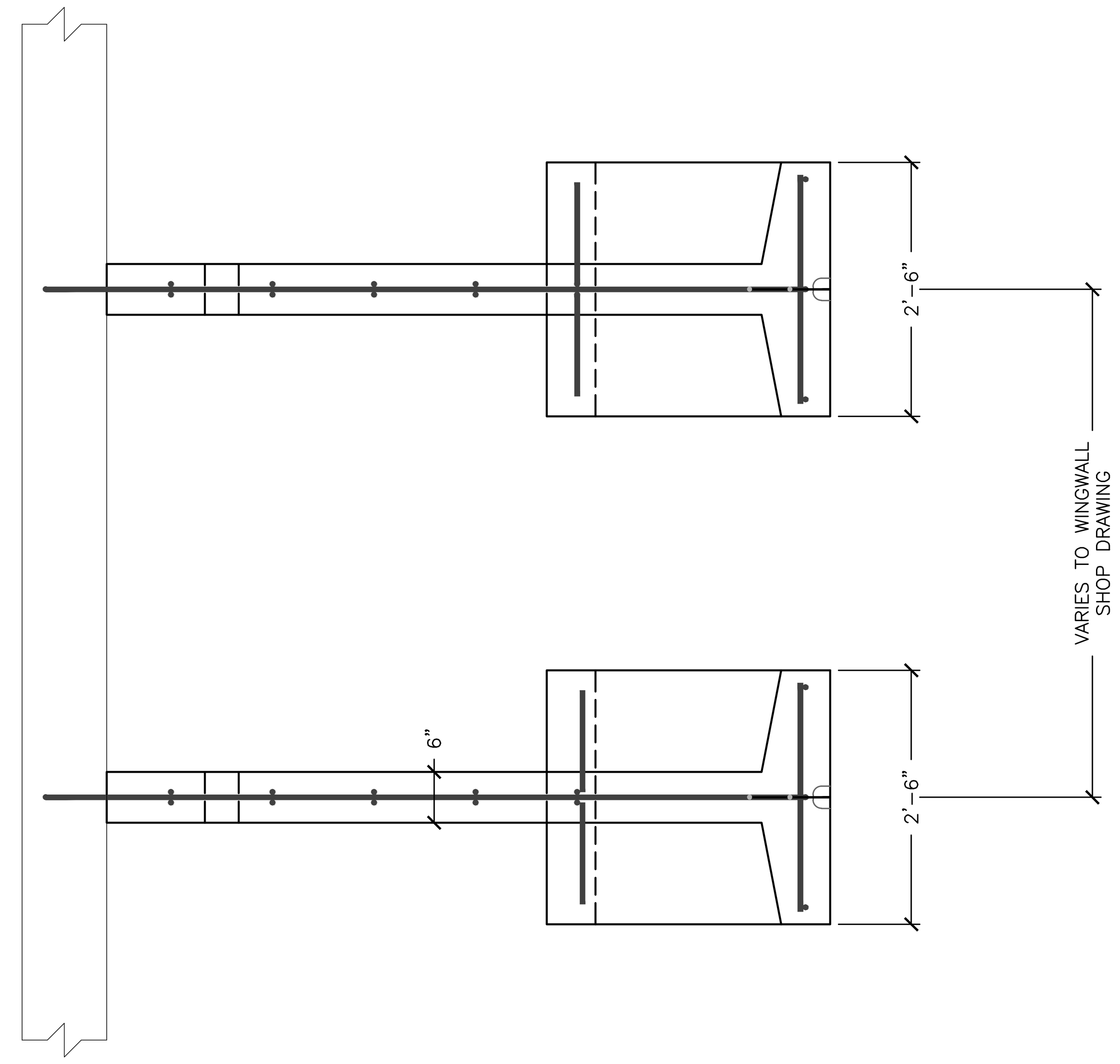

5 REQ'D

MARK	QTY	SIZE	L	TYPE	LENGTH
B501	1	#5	4'-5"	1	10'-1½"
B502	1	#5	4'-1"	1	9'-5"
B503	1	#5	3'-8¾"	1	8'-9"
B504	1	#5	3'-0½"	1	7'-4½"
B505	2	#5	3'-8½"	2	4'-7"
B506	2	#5	----	Str.	3'-3"
B507	4	#5	----	Str.	4'-4½"
B508	7	#5	----	Str.	2'-3"
B509	2	#5	----	Str.	3'-8"
ANCHOR TYPE "C"					
CONCRETE QUANTITY				0.48 CY	
WEIGHT				2010 LB	
W1				2'-4"	
W2				4'-5⅜"	
X =	2'-8¾"	Y=	1'-8½"		
BAR LIST					

6 REQ'D

MARK	QTY	SIZE	L	TYPE	LENGTH
B501	1	#5	5'-5"	1	12'-1½"
B502	1	#5	5'-1"	1	11'-5"
B503	1	#5	4'-8¾"	1	10'-9"
B504	1	#5	4'-0½"	1	9'-4½"
B505	2	#5	3'-8½"	2	4'-7"
B506	2	#5	----	Str.	3'-3"
B507	4	#5	----	Str.	4'-4½"
B508	7	#5	----	Str.	2'-3"
B509	2	#5	----	Str.	3'-8"
ANCHOR TYPE "D"					
CONCRETE QUANTITY				0.54 CY	
WEIGHT				2285 LB	
W1				3'-4"	
W2				5'-5⅜"	
X =	3'-5⅛"	Y=	1'-8½"		
BAR LIST					

2 REQ'D

MARK	QTY	SIZE	L	TYPE	LENGTH
B501	1	#5	6'-5"	1	14'-1½"
B502	1	#5	6'-1"	1	13'-5"
B503	1	#5	5'-8¾"	1	12'-9"
B504	1	#5	5'-0½"	1	11'-4½"
B505	2	#5	3'-8½"	2	4'-7"
B506	2	#5	----	Str.	3'-3"
B507	4	#5	----	Str.	4'-4½"
B508	7	#5	----	Str.	2'-3"
B509	2	#5	----	Str.	3'-8"
ANCHOR TYPE "E"					
CONCRETE QUANTITY				0.61 CY	
WEIGHT				2550 LB	
W1				4'-4"	
W2				6'-5⅜"	
X =	4'-0"	Y=	1'-8⅝"		
BAR LIST					

6 REQ'D

MARK	QTY	SIZE	L	TYPE	LENGTH
B501	1	#5	7'-5"	1	16'-1½"
B502	1	#5	7'-1"	1	15'-5"
B503	1	#5	6'-8¾"	1	14'-9"
B504	1	#5	6'-0½"	1	13'-4½"
B505	2	#5	3'-8½"	2	4'-7"
B506	8	#5	----	Str.	3'-3"
B507	4	#5	----	Str.	4'-4½"
B508	7	#5	----	Str.	2'-3"
B509	2	#5	----	Str.	3'-8"

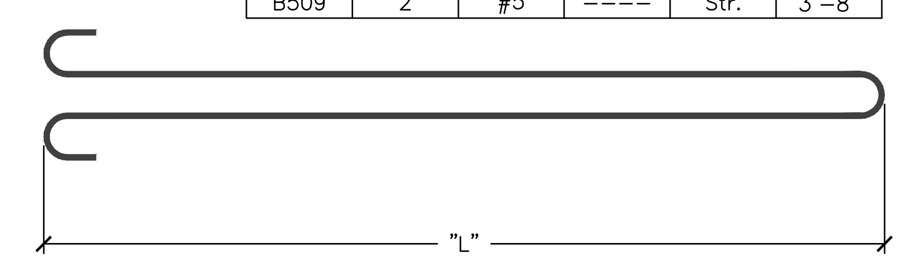

TYPE 1

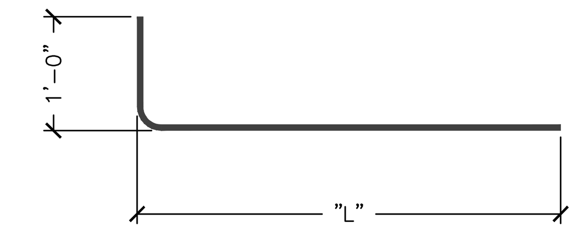

TYPE 2

SEE STRUCTURE AND WINGWALL NOTES FOR BACKFILL AND FOUNDATION SPECIFICATIONS

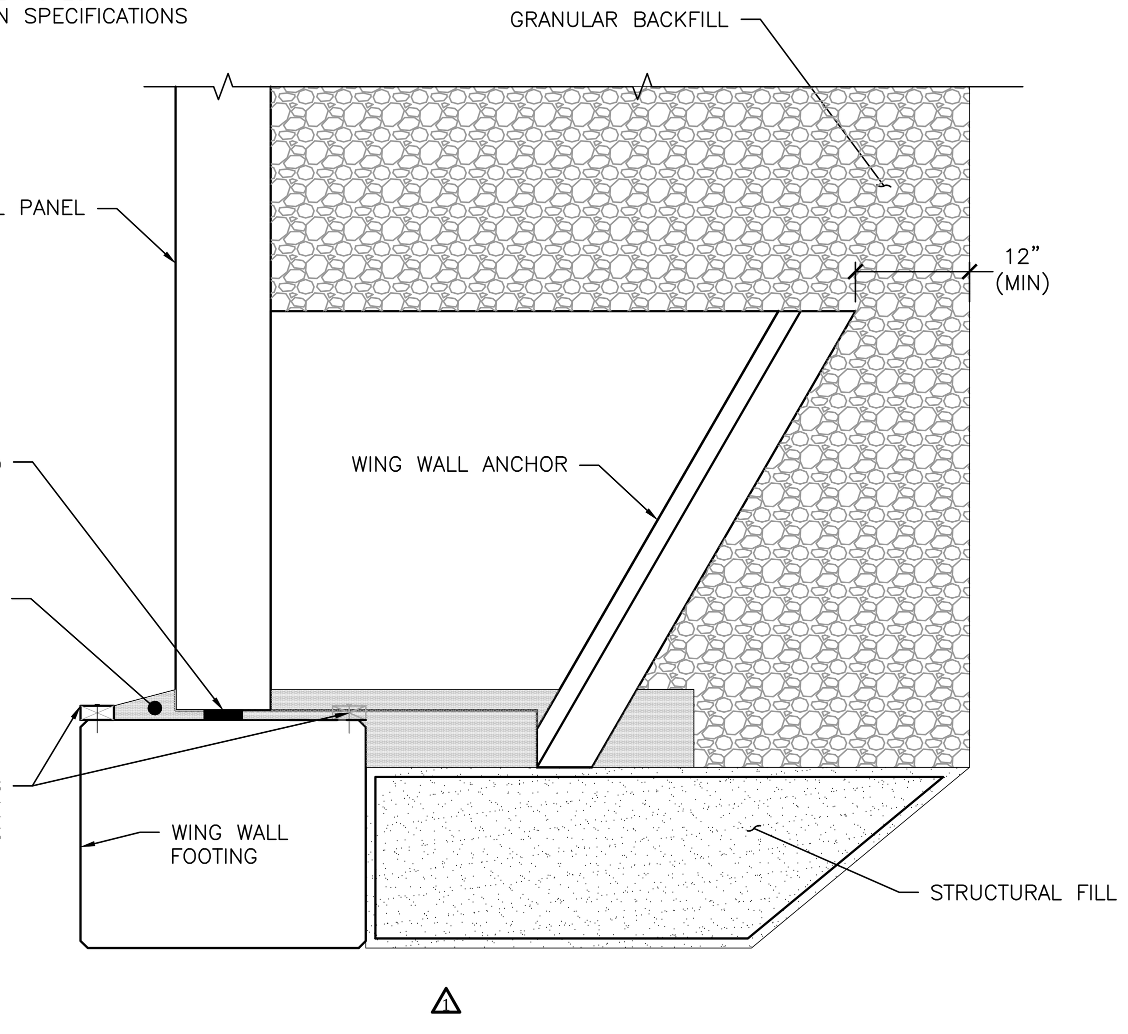

2 S8.0 FOOTING TO WW ATTACHMENT DETAIL
¾" = 1'-0"

NOTE: REINFORCING SHOWN REPRESENTS "E" ANCHOR
OTHER ANCHOR REINFORCING SIMILAR

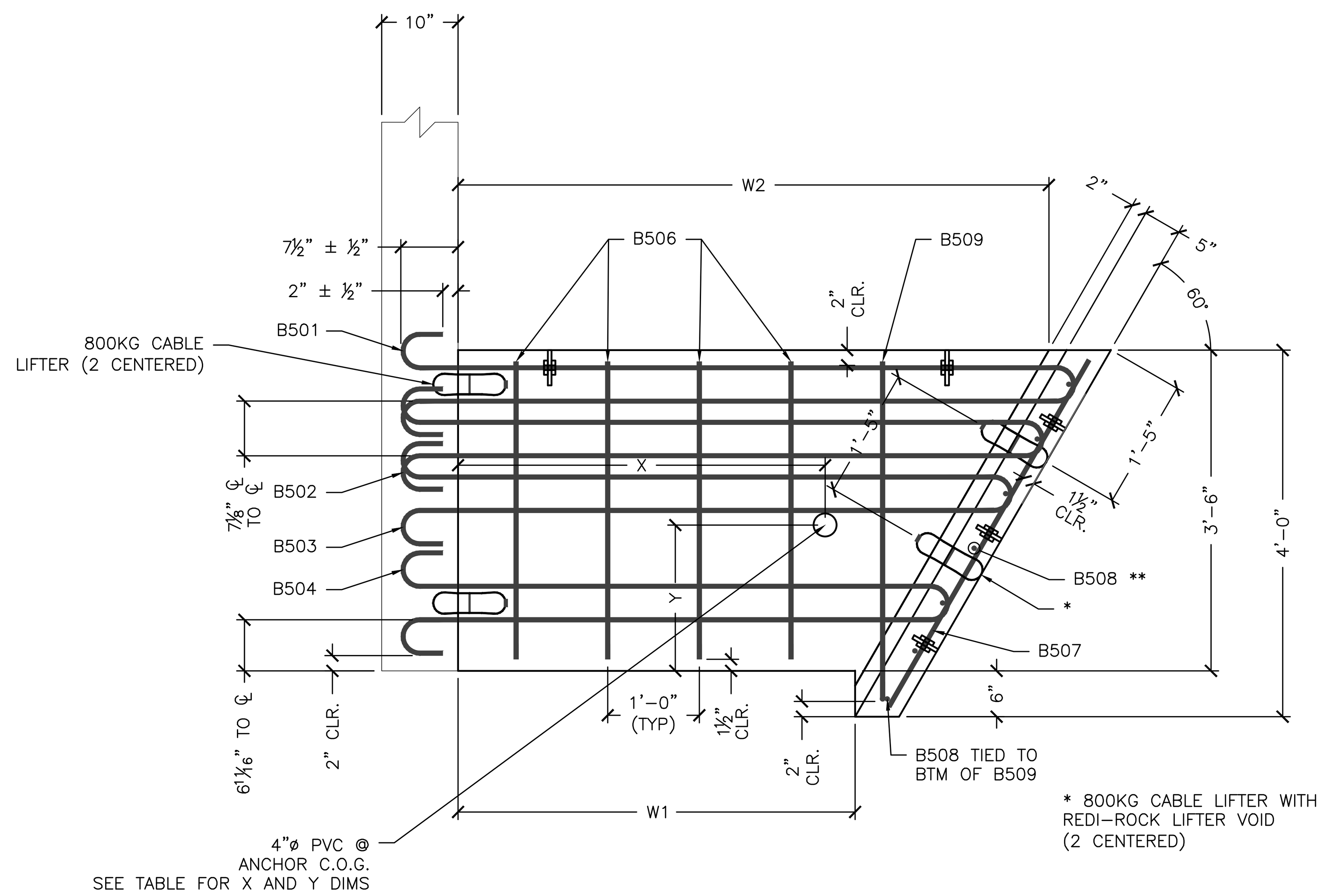

* 800KG CABLE LIFTER WITH REDI-ROCK LIFTER VOID (2 CENTERED)

** PLACE (1) B508 THROUGH EACH HOOP BARS, (1) CENTERED BETWEEN HOOP BARS 503 & 504, AND (2) BELOW B504 HOOP BAR W/ BOTTOM B508 2" CLEAR FROM BOTTOM (7 TOTAL)

3 S8.0 ANCHOR DETAIL
¾" = 1'-0"

No.	Date	Revision	By
2	6/2/2014	Revised For constructability (form limitations)	CFP
1	5/9/2014	Revised per VHB Comments 5/7/2014	PJL

MICHIE CORPORATION, INC.
173 BUXTON INDUSTRIAL DRIVE-PO BOX 870
HENNIKER, NH 03242
PHONE: 603-428-3218
FAX: 603-428-7426

VT Route 73 - Bridge 13 (Project # ER STP 0162 (19))
Rochester, VT

28'x10' Archcon - Anchor Wall Details

Project No. 4653
Date: 4/2/2014
Designed by: xxx
Drawn by: CFP
Checked by: PJL/Delta
Scale: AS SHOWN

Prepared for:
WM Schultz Construction
PO Box 2620
Ballston Spa, NY 12020

DWG NO.
S8.0

S:\PROJECTS\SCHULTZ CONSTRUCTION\ROCHESTER, VT - RT 13 VTRANS ER STP 0162 (19)\DWGS\AC 28X10 SCHULTZ 4653 (REV 06 02 14).DWG 6/3/2014 10:00 AM