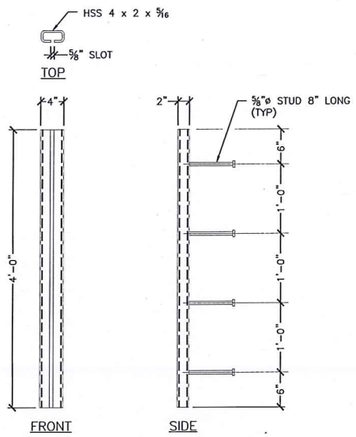

4 S1.0 STRUCTURAL TUBE DETAILS
1" = 1'-0"

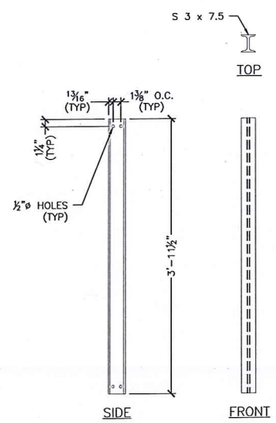

5 S1.0 I-BEAM DETAILS
1" = 1'-0"

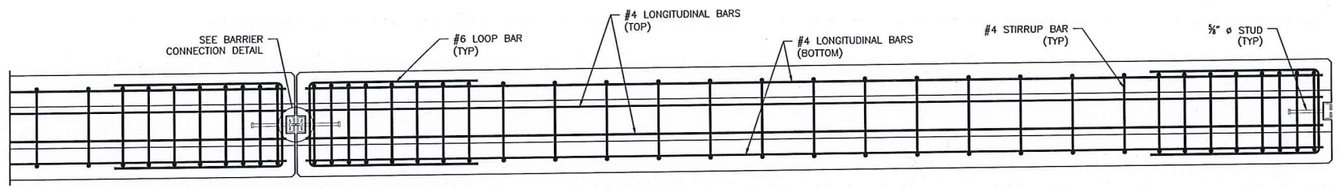

1 S1.0 PLAN
3/4" = 1'-0"

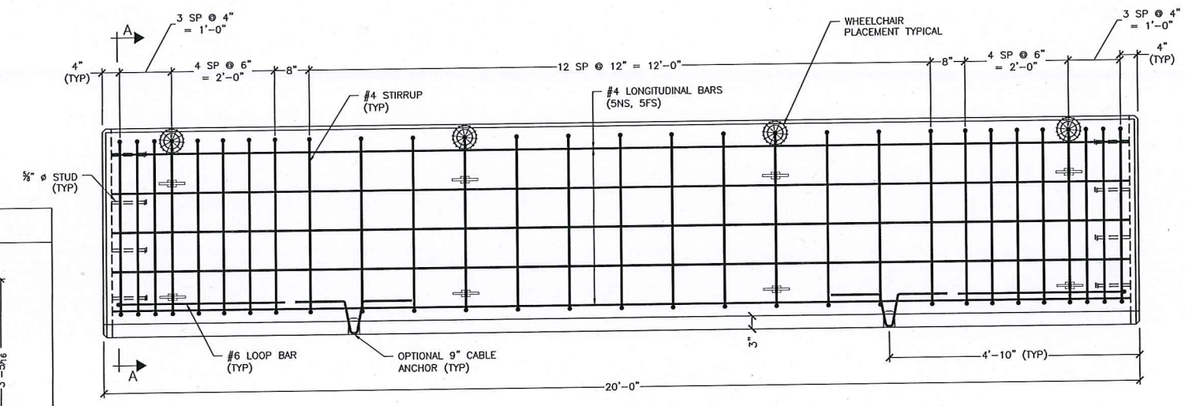

2 S1.0 STANDARD BARRIER
3/4" = 1'-0"

2 REQ'D
PIECE TO WEIGH: 17,890# (4.26CY)

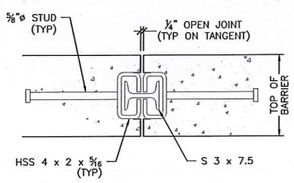

6 S1.0 BARRIER CONNECTION DETAIL
2" = 1'-0"

REINFORCING SCHEDULE

DESCRIPTION	SIZE	NO.	UNBENT LENGTH	TYPE
LONGITUDINAL (EACH FACE)	#4	10	19'-8"	
STIRRUPS	#4	29	8'-11"	
LOOP BAR	#6	2	7'-8"	

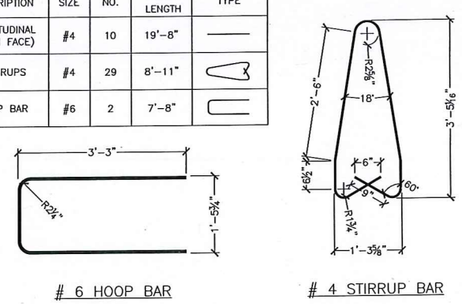

NOTE:
ALL RADII ARE TO INSIDE FACE
LENGTHS ARE TO OUTSIDE FACE

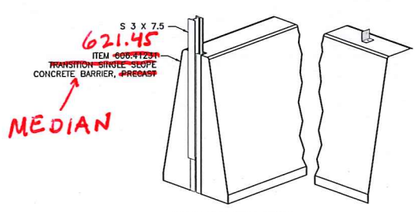

PERSPECTIVE VIEW
UNTAPERED END

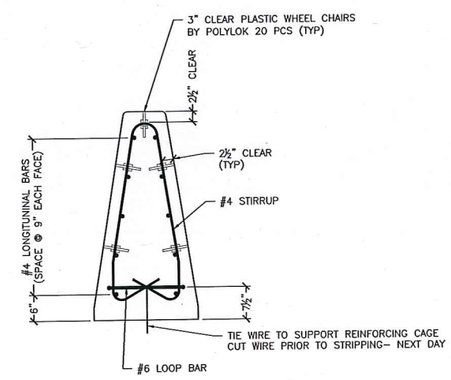

3A S1.0 SECTION A–A (REINFORCEMENT)
3/4" = 1'-0"

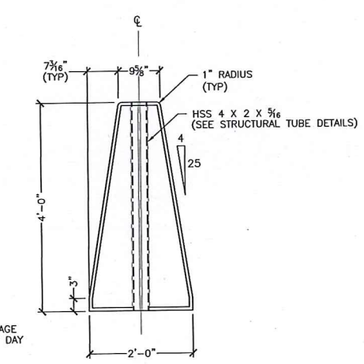

3B S1.0 END VIEW (MASONRY)
3/4" = 1'-0"

GENERAL NOTES:
1. THE CONCRETE BARRIER DETAILS, AS SHOWN ON THIS SHEET, ARE IN COMPLIANCE WITH THE REQUIREMENTS VAOT STANDARD SPECIFICATIONS FOR CONSTRUCTION SEC 540.
2. I–BEAMS AND STRUCTURAL TUBES SHALL BE GALVANIZED AFTER FABRICATION.
3. STUD WELDING SHALL BE IN ACCORDANCE WITH SUBSECTION 714.10.
4. SLOT IN STRUCTURAL TUBE SHALL BE CUT WITH MECHANICALLY GUIDED MEANS TO A SMOOTH, UNIFORM SURFACE MEETING A SURFACE ROUGHNESS OF 1000 MICROINCHES OR BETTER (ANSI B46.1).

MATERIAL NOTES:
1. THE BARRIERS SHALL BE LIGHT COLORED CLASS "A" CONCRETE HAVING A MINIMUM 28 DAY COMPRESSION STRENGTH OF 4,000 PSI. BARRIERS SHALL HAVE A SMOOTH UNIFORM SURFACE FREE OF DEFECTS AND IRREGULARITIES. CASTING DATE SHALL BE SHOWN ON BARRIER. ALL EXPOSED EDGES OF CONCRETE SHALL BE CHAMFERED 3/4", UNLESS NOTED OTHERWISE.
2. ALL REINFORCING STEEL SHALL BE LEVEL II (DUAL COATED OR STAINLESS CLAD). REINFORCEMENT SHOWN IS THE MINIMUM REQUIRED.
3. EACH BARRIER UNIT SHALL INCLUDE ONE S 3x7.5 AS SHOWN ON THIS PLAN SHEET.

Vermont Agency of Transportation
Rochester ER STP 0162(19) Barrier FAC.pdf
RECEIVED
ON: May 21, 2014
and Checked for
CONFORMANCE
BY: Jennifer Fitch DATE: 05/28/2014

SHOP DRAWING REVIEW

☐ REVIEWED AS REQUIRED BY THE CONSTRUCTION CONTRACT DOCUMENTS AND APPROVED, BUT ONLY FOR CONFORMANCE TO THE DESIGN CONCEPT OF THE WORK, AND SUBJECT TO FURTHER LIMITATIONS AND REQUIREMENTS CONTAINED IN THE CONSTRUCTION CONTRACT DOCUMENTS.
☐ REJECTED ☐ REVISE AND RESUBMIT ☒ FURNISH AS CORRECTED

CORRECTIONS OR COMMENTS MADE ON THE SHOP DRAWINGS DURING THIS REVIEW DO NOT RELIEVE CONTRACTOR FROM COMPLIANCE WITH REQUIREMENTS OF THE DRAWINGS AND SPECIFICATIONS. THIS CHECK IS ONLY FOR REVIEW OF GENERAL CONFORMANCE WITH THE DESIGN CONCEPT OF THE PROJECT AND GENERAL COMPLIANCE WITH THE INFORMATION GIVEN IN THE CONTRACT DOCUMENTS. THE CONTRACTOR IS RESPONSIBLE FOR: CONFIRMING AND CORRELATING ALL QUANTITIES AND DIMENSIONS; SELECTING FABRICATION PROCESSES AND TECHNIQUES OF CONSTRUCTION; COORDINATING HIS WORK WITH THAT OF ALL OTHER TRADES; AND PERFORMING HIS WORK IN A SAFE AND SATISFACTORY MANNER.

VHB
Job Number: 57518
Reviewed By: B Masse
Date: 5-28-14

No.	Date	Revision	By
1	XXXXXXXXXX	XX	XXX

MICHIE CORPORATION, INC.
173 BUXTON INDUSTRIAL DRIVE-PO BOX 870
HENNIKER, NH 03242
PHONE: 603-428-3219
FAX: 603-428-7428

VAOT Proj.# ER STP 0162 (19) - VT Rt 73 Bridge 13
Rochester, VT
20' Single Slope Median Barrier - Item# 621.45

Scale: AS SHOWN
Checked by: XXX
Drawn by: CFP
Designed by:
Project No. 4653
Date: 5/20/2014

Prepared for:
WM Schultz Const, Inc.
PO Box 2620
Ballston Spa, NY 12020

DWG NO.
S1.0

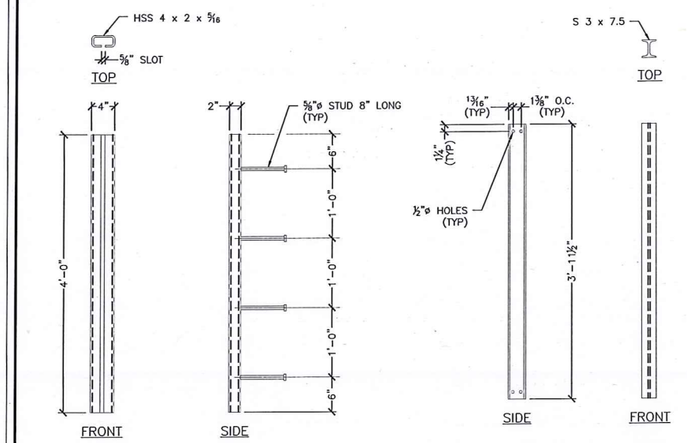

4 S2.0 STRUCTURAL TUBE DETAILS
1" = 1'-0"

5 S2.0 I-BEAM DETAILS
1" = 1'-0"

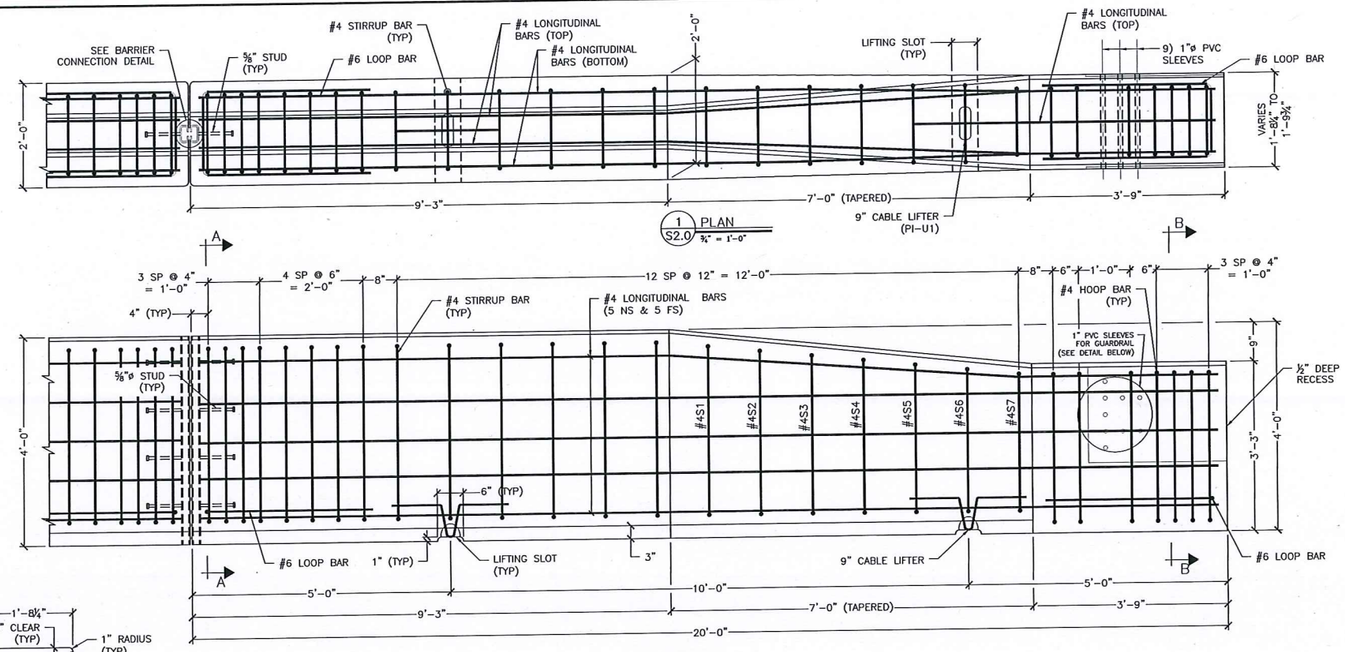

1 S2.0 PLAN
3/4" = 1'-0"

2 S2.0 ELEVATION
3/4" = 1'-0"

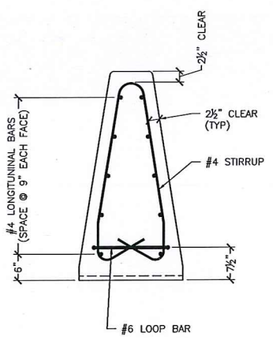

6A S2.0 SECTION A–A (REINFORCEMENT)
3/4" = 1'-0"

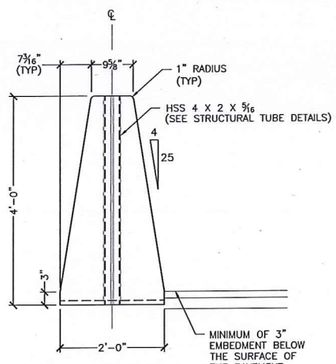

6B S2.0 END VIEW (MASONRY)
3/4" = 1'-0"

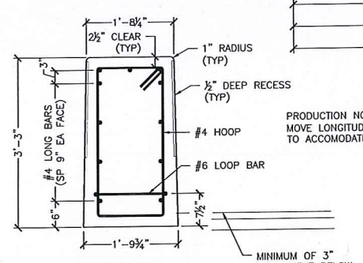

6C S2.0 SECTION B–B (MASONRY & REINFORCEMENT)
3/4" = 1'-0"

PRODUCTION NOTE:
MOVE LONGITUDINAL BARS ±1" TO ACCOMODATE PVC SLEEVE

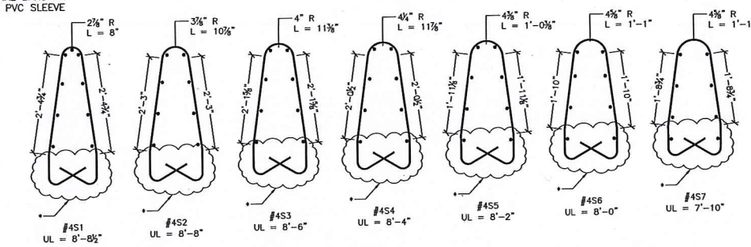

* BOTTOM SAME AS #4 STIRRUP BAR (STANDARD)

** UL = UNBENT LENGTH

3 S2.0 SPECIAL STIRRUP DETAILS
N.T.S.

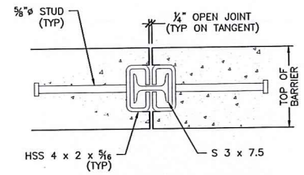

8 S2.0 BARRIER CONNECTION DETAIL
2" = 1'-0"

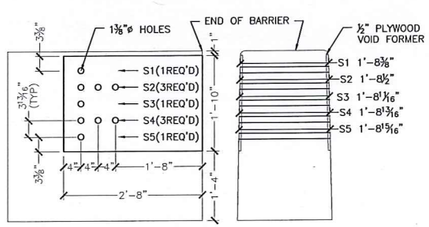

7A S2.0 SLEEVE & FORMER DETAILS
N.T.S.

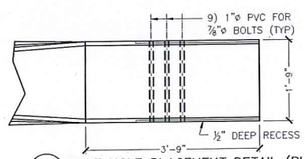

7B S2.0 BOLT HOLE PLACEMENT DETAIL (PLAN VIEW)
N.T.S.

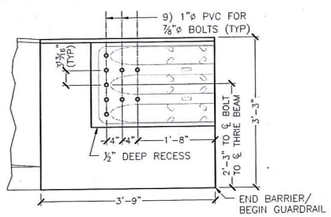

7C S2.0 BOLT HOLE PLACEMENT DETAIL (ELEVATION)
N.T.S.

CONCRETE BARRIER REINFORCING SCHEDULE

DESCRIPTION	SIZE	QTY	UNBENT LENGTH	TYPE
LONGITUDINAL	#4	10	19'-8"	
STIRRUPS	#4	14	8'-11"	
LOOP BAR	#6	2	1 @ 7'-8" 1 @ 7'-7"	
HOOP BAR	#4	7	9'-3"	

NOTE:
ALL RADII ARE TO INSIDE FACE
LENGTHS ARE TO OUTSIDE FACE

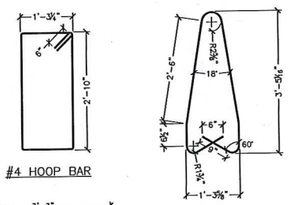

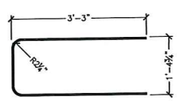

6 LOOP BAR @ BLOCK END

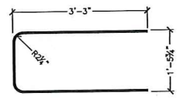

6 LOOP BAR @ SSB END

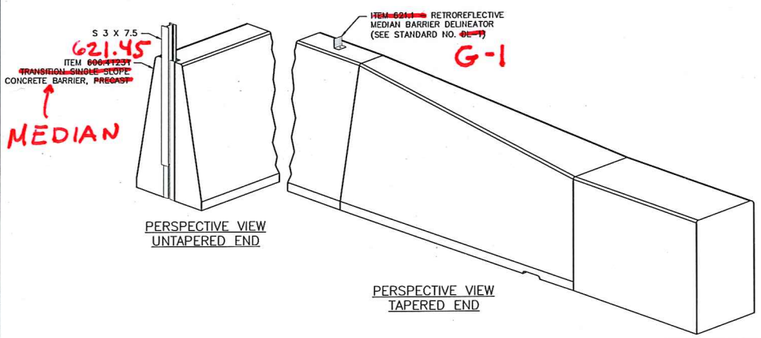

PERSPECTIVE VIEW UNTAPERED END

PERSPECTIVE VIEW TAPERED END

4 REQ'D
PIECE TO WEIGH: 17,800# (4.24CY)

GENERAL NOTES:
1. THE CONCRETE BARRIER DETAILS, AS SHOWN ON THIS SHEET, ARE IN COMPLIANCE WITH THE REQUIREMENTS VAOT STANDARD SPECIFICATIONS FOR CONSTRUCTION SEC 540.
2. I–BEAMS AND STRUCTURAL TUBES SHALL BE GALVANIZED AFTER FABRICATION.
3. STUD WELDING SHALL BE IN ACCORDANCE WITH SUBSECTION 714.10.
4. SLOT IN STRUCTURAL TUBE SHALL BE CUT WITH MECHANICALLY GUIDED MEANS TO A SMOOTH, UNIFORM SURFACE MEETING A SURFACE ROUGHNESS OF 1000 MICROINCHES OR BETTER (ANSI B46.1).

MATERIAL NOTES:
1. THE BARRIERS SHALL BE LIGHT COLORED CLASS "A" CONCRETE HAVING A MINIMUM 28 DAY COMPRESSION STRENGTH OF 4,000 PSI. BARRIERS SHALL HAVE A SMOOTH UNIFORM SURFACE FREE OF DEFECTS AND IRREGULARITIES. CASTING DATE SHALL BE SHOWN ON BARRIER. ALL EXPOSED EDGES OF CONCRETE SHALL BE CHAMFERED 3/4", UNLESS NOTED OTHERWISE.
2. ALL REINFORCING STEEL SHALL BE LEVEL II (DUAL COATED OR STAINLESS CLAD). REINFORCEMENT SHOWN IS THE MINIMUM REQUIRED.
3. EACH BARRIER UNIT SHALL INCLUDE ONE S 3x7.5 AS SHOWN ON THIS PLAN SHEET.

SHOP DRAWING REVIEW
☐ REVIEWED AS REQUIRED BY THE CONSTRUCTION CONTRACT DOCUMENTS AND APPROVED, BUT ONLY FOR CONFORMANCE TO THE DESIGN CONCEPT OF THE PROJECT AND GENERAL COMPLIANCE WITH THE INFORMATION GIVEN IN THE CONTRACT DOCUMENTS. THE CONTRACTOR REMAINS RESPONSIBLE FOR DIMENSIONS, QUANTITIES, FABRICATION PROCESSES AND TECHNIQUES OF CONSTRUCTION; COORDINATING HIS WORK WITH THAT OF ALL OTHER TRADES; AND PERFORMING HIS WORK IN A SAFE AND SATISFACTORY MANNER.
☐ REVISE AND RESUBMIT
☐ REJECTED
CORRECTIONS OR COMMENTS MADE ON THE SHOP DRAWINGS DURING THIS REVIEW DO NOT RELIEVE CONTRACTOR FROM COMPLIANCE WITH REQUIREMENTS OF THE DRAWINGS AND SPECIFICATIONS. THIS CHECK IS ONLY FOR REVIEW OF GENERAL CONFORMANCE WITH THE DESIGN CONCEPT OF THE PROJECT AND GENERAL COMPLIANCE WITH THE INFORMATION GIVEN IN THE CONTRACT DOCUMENTS. THE CONTRACTOR REMAINS RESPONSIBLE FOR DIMENSIONS, QUANTITIES, FABRICATION PROCESSES AND TECHNIQUES OF CONSTRUCTION; COORDINATING HIS WORK WITH THAT OF ALL OTHER TRADES; AND PERFORMING HIS WORK IN A SAFE AND SATISFACTORY MANNER.
☐ FURNISH AS CORRECTED
VHB
Job Number: 52528
Reviewed By: Bmeese
Date: 5-28-14

Vermont Agency of Transportation
RECEIVED
ON: May 21, 2014
and Checked for
CONFORMANCE
BY: Jennifer Fitch DATE: 05/28/2014

No.	Date	Revision	By
1	XXXXXXXXX	XX	XXX

MICHIE CORPORATION, INC.
179 BUXTON INDUSTRIAL DRIVE-PO BOX 870
HENNIKER, NH 03242
PHONE: 603-428-3218
FAX: 603-428-7428

VAOT Proj.# ER STP 0162 (19) - VT Rt 73 Bridge 13
Rochester, VT
20' Transition Single Slope Concrete Barrier

Project No. 4596
Date: 5/7/2014
Designed by:
Drawn by: CFP
Checked by: XXX
Scale: AS SHOWN

Prepared for:
WM Schultz Const, Inc.
PO Box 2620
Ballston Spa, NY 12020

DWG NO.
S2.0