2. TEMPORARY EPSC PLAN MEASURES ARE CONCEPTUALLY SHOWN. THE CONTRACTOR MAY RELOCATE TEMPORARY MEASURES TO IMPROVE EROSION CONTROL WITH APPROVAL OF THE ENGINEER. SILT FENCE SHALL NOT BE INSTALLED ACROSS CONTOURS.

3. THE CONTRACTOR SHALL USE OTHER TEMPORARY EROSION CONTROL MEASURES AS NECESSITATED BY THE SEQUENCE OF CONSTRUCTION OR AS DIRECTED BY THE ENGINEER.

4. REFER TO TEMPORARY EROSION CONTROL DETAIL SHEETS FOR ADDITIONAL DETAILS.

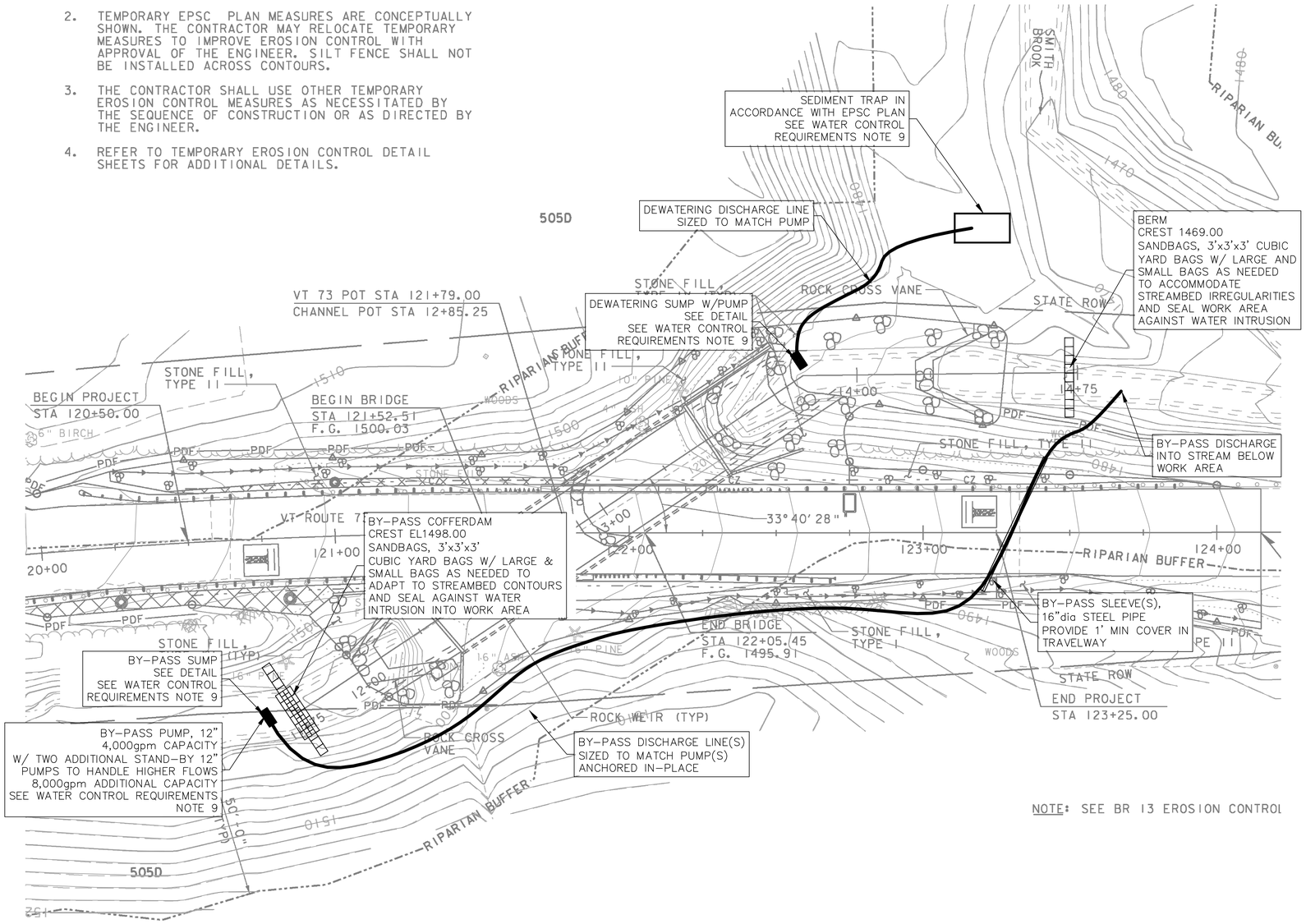

PLAN VIEW
1" = 20'

Water Control Requirements:

1. The water control system is to be coordinated with the EPSC work.
2. This work shall consist of the construction, material excavation within, dewatering, maintenance and removal of water control system in accordance with the specifications at locations designated in the Plans or in the Contract.
3. This work shall consist of providing a method for the purpose of constructing, in the dry, a specific foundation or other component of a structure in accordance with Contract requirements.
4. This involves construction, maintenance, and removal of a watertight structure or may involve alternate methods of de-watering and stabilizing the specific site.
5. The Contractor shall obtain any and all necessary permits or clearances for alternate methods.
6. The locations and elevations for excavation shall be as indicated on the Plans.
7. The Engineer may order removal of poor foundation material below the normal designated elevation and replacement with an approved material.
8. Dewatering system elements shown on the plan are approximate
9. Actual location and sizing of dewatering system elements are to be based on current field conditions
10. During the performance of all work under this contract, the Contractor shall adopt such precautions in the conduct of his operation as may be necessary to avoid contaminating ground or surface water.
11. All earthwork, grading, moving of equipment, water control and other operation likely to create silting, shall be so planned and conducted as to minimize pollution in any wetland resource area.
12. Water used for any purpose whatsoever by the Contractor, which has become contaminated with soil, bitumen, salt, concrete or other pollutants shall not be discharged into any wetland resource area.
13. Under no circumstances shall the Contractor discharge pollutants into a wetland resource area.
14. The Contractor shall not store fuel or permit any refueling of construction equipment while such equipment is within 100 feet of any resource area.
15. The contractor shall make all efforts to control the run-off of water and sediment from the project site during path construction.
16. The Contractor shall use such equipment and shall perform his operations in such a manner that boiling or other disturbances of the soil in the construction area will be prevented.
17. He shall keep the area being excavated dry by such means that water will be prevented from entering from the adjacent soils.
18. All dewatering and related earthworks shall be conducted in such a manner as to prevent siltation or contamination of the brook.
19. The pumping discharge shall not be allowed to enter directly into the brook.
20. The water from the work areas shall be pumped to a sediment system in accordance with the EPSC Plan.
21. The Contractor shall provide and maintain ample pumps, pipes and other devices to promptly and continually remove and dispose of water from the excavation areas.
22. The size and configuration of pumps and pipes shall be selected by the contractor.
23. After having served its purpose, the water control system shall become the property of the Contractor and shall be removed by the Contractor from the site subject to the Engineer's approval.

Water Control Procedure:

1. The Water Control System is to control water intrusion into the work areas such that the work can be performed "in-the-dry"
2. Water control includes all dewatering necessary to accomplish existing bridge removal, new bridge base material placement, new bridge construction, and new stream bed construction "in-the-dry"
3. The need and extent of sedimentation systems and dewatering techniques and sedimentation controls needed to control water and sediment at the site are to be determined in the field based on current conditions and the EPSC Plan.
4. Provide the means of removing all sediment from water pumped from the excavation areas
5. Apply pumping operations, installation of sandbags, geotextile fabrics, and all other means to collect, settle, and discharge water back in to the waterway as required during construction
6. Stream diversions shall be conducted in such a manner as to minimize siltation and prevent contamination of the waterway
7. Ensure that water control operations neither cause the accumulation of siltation nor any adverse effect to the water or the environment
8. The effectiveness of the water control method used will vary based on the field conditions at the time at which the work is being performed
9. Weather monitoring will be required.
10. If a storm is forecast additional adequate measures are to be at the ready to handle anticipated flow increases.
11. Flow increases can be handled by addition of by-pass pumps in size and number to be determined in the field based on current conditions and anticipated flow increases.
12. If flows are beyond the capacity of all available measures, the water control system is to be remove, the excavation flooded and all obstacle preventing free flow of the stream removed.
13. The Water Control System is non-permanent and is to not harm the ecology of the waterway, land under water, and surrounding land

General Notes

General:

1. Existing conditions are taken from Contract Drawings.
2. All dimensions relative to existing elements are to be field checked prior to fabrication and installation of proposed elements.
3. Control datums are those from the Contract Documents.
4. Design is based on conditions shown in the Contract Documents. Should conditions encountered in the field vary from those indicated conditions, the design may be invalid and revisions should be investigated.

Water Control System

1. Employ traffic plan procedures and temporarily reduce travel to one lane
2. Install by-pass discharge line pipe sleeve crossing under existing road
3. Install by-pass sump with pump(s) in stream upstream of cofferdam location with discharge line(s) passing through the pipe conduit to discharge into the stream downstream of the work area
4. Install cofferdam upstream of the work area and below the location of the by-pass sump
5. By-pass the stream flow around the work area and into the stream beyond the work area with the by-pass sump and pump(s)
6. Install berm in on streambed downstream of work area and above by-pass discharge
7. Install dewatering sump(s) and pump(s) as needed and located based on current field conditions for work to be done "in-the-dry"
8. Discharge dewatering into sediment trap
9. Perform contract work
10. Remove Water Control System components

STATE OF VERMONT TERRY WAITE LICENSED PROFESSIONAL ENGINEER

July 28, 2014

No.	Revision/Issue	Date

Firm Name and Address
TAW Associates
Waterville Valley, NH
603-236-4247 www.TAWAssociates.net

Proposed Improvement Bridge Project Bridge No. 13, 15, 16 & 19 - Rochester, VT Vtrans ER BRF 0162(19), (16), (17) & (18)

Project Name and Address
Water Control
Bridge 13

GENERAL PLAN

Project	Sheet
140403A	WC01
Date: July 28, 2014	
Scale: noted	

SCHULTZ CONSTRUCTION, INC.

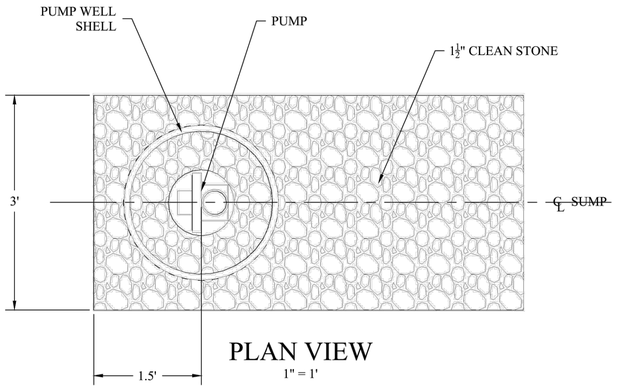

PLAN VIEW
1" = 1'

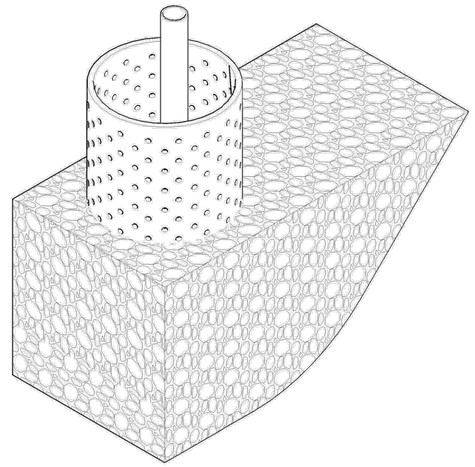

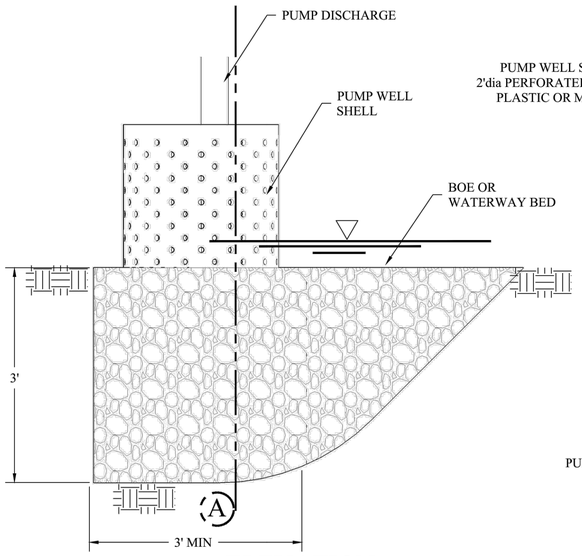

ELEVATION

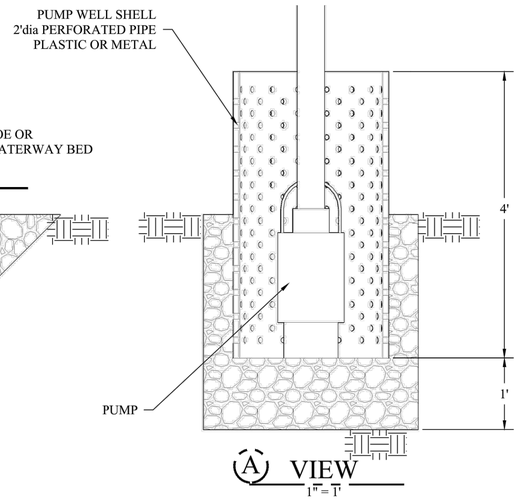

VIEW
1" = 1'

SUMP DETAIL
NTS

General Notes

July 28, 2014

No.	Revision/Issue	Date

Firm Name and Address
TAW Associates
Waterville Valley, NH
603-236-4247 www.TAWAssociates.net

Proposed Improvement Bridge Project Bridge No. 13, 15, 16 & 19 - Rochester, VT Vtrans ER BRF 0162(19), (16), (17) & (18)

Project Name and Address
Water Control
Bridge 13

DETAILS

Project	Sheet
140403A	WC02
Date: July 28, 2014	
Scale: noted	

SCHULTZ CONSTRUCTION, INC.

DOCUMENT: 140403A

Engineering Computations

Water Control Plan
Bridge 13

-

For The Project:
Proposed Improvement Bridge Project Bridge No. 13, 15, 16 & 19 – Rochester, VT
Vtrans ER BRF 0162(19), (16), (17) & (18)

-

for

SCHULTZ CONSTRUCTION, INC.

by

TAW ASSOCIATES

July 28, 2014

TABLE OF CONTENTS

TABLE OF CONTENTS ***2***

LOCUS PLAN: ***3***

PHOTOS: ***3***

HYDROLOGY DATA: ***6***

GENERAL PROCEDURE: ***10***

WATER CONTROL SYSTEM: ***10***

SUPPORTING ANALYSIS: ***13***

Stream By-Pass System: **13**

By-Pass Pumps: 13

By-Pass Cofferdam: 15

LOCUS PLAN:

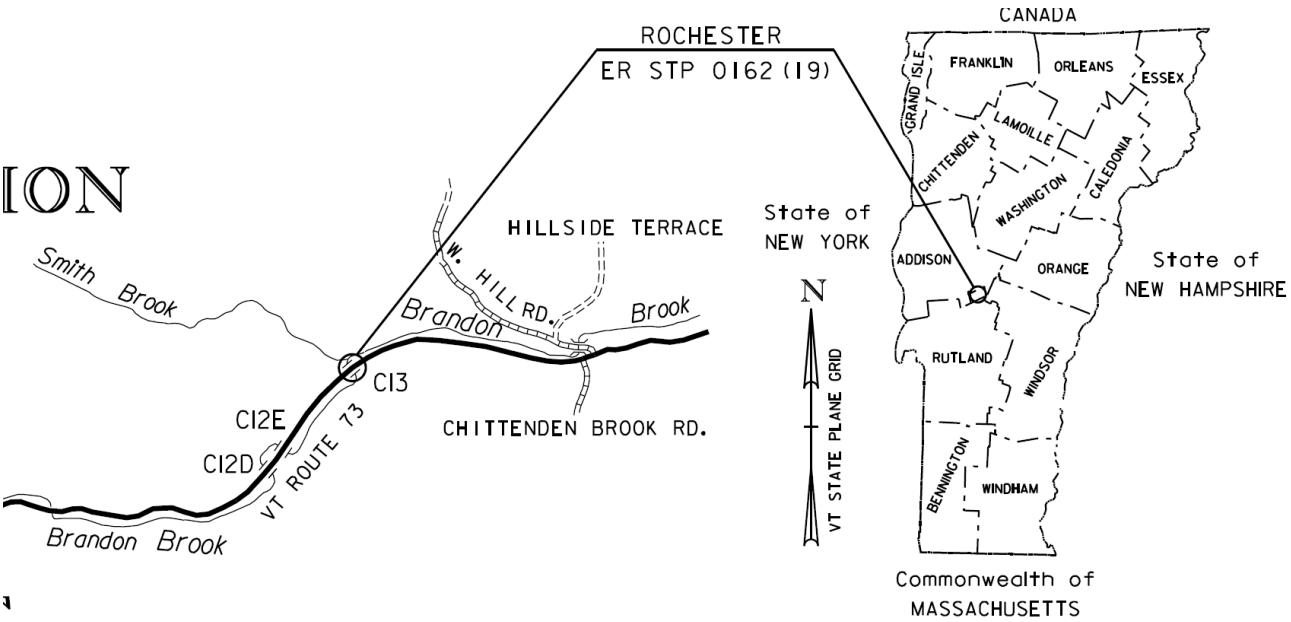

LOCATION MAP
NOT TO SCALE

PHOTOS:

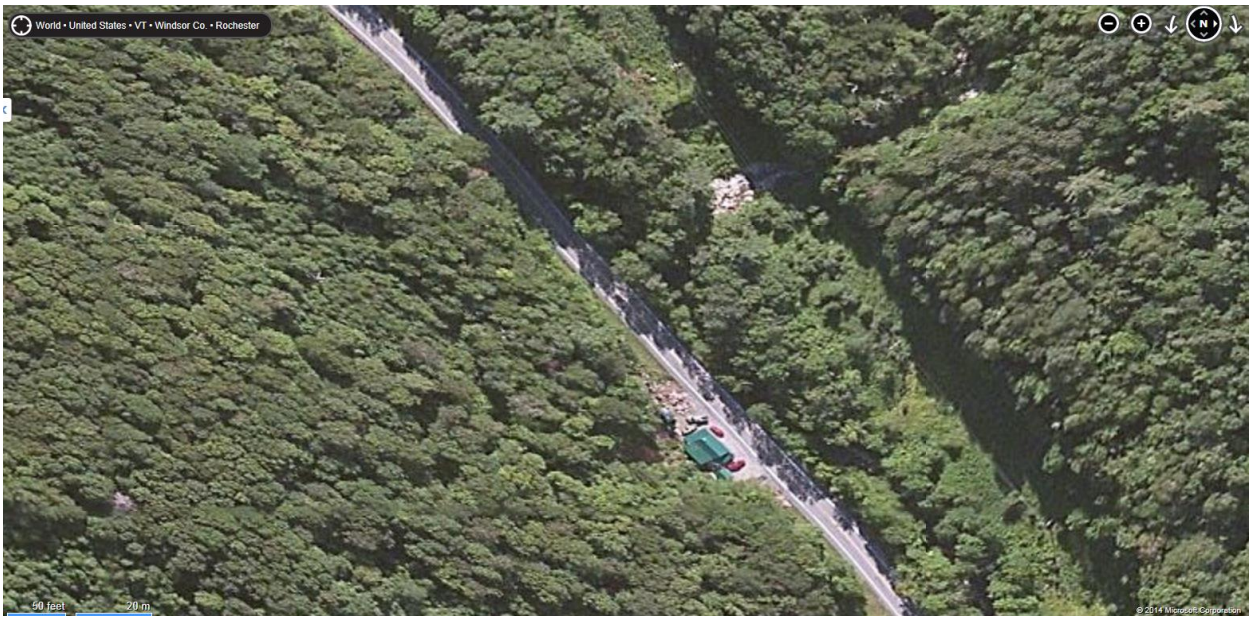
World • United States • VT • Windsor Co. • Rochester
50 feet
20 m
© 2014 Microsoft Corporation

World • United States • VT • Windsor Co. • Rochester
50 feet
20 m

World • United States • VT • Windsor Co. • Rochester
50 feet
20 m
© 2014 Microsoft Corporation

HYDROLOGY DATA:

HYDROLOGIC DATA

Date: 4/16/2013

DRAINAGE AREA : 3.0 sq miles
CHARACTER OF TERRAIN : Forested, Hilly, Mountainous
STREAM CHARACTERISTICS : Steep Mountainous Stream
NATURE OF STREAMBED : Boulders and Cobbles

PEAK FLOW DATA

Q 2.33 =	225 cfs	Q 50 =	725 cfs
Q 10 =	450 cfs	Q 100 =	850 cfs
Q 25 =	600 cfs	Q 500 =	1,190 cfs

DATE OF FLOOD OF RECORD : 1927
ESTIMATED DISCHARGE: Unknown
WATER SURFACE ELEV.: Unknown
NATURAL STREAM VELOCITY : Q50 = 25.3 fps
ICE CONDITIONS : Moderate
DEBRIS: Moderate
DOES THE STREAM REACH MAXIMUM HIGHWATER ELEV. RAPIDLY? unknown
IS ORDINARY RISE RAPID? unknown
IS STAGE AFFECTED BY UPSTREAM OR DOWNSTREAM CONDITIONS? No
IF YES, DESCRIBE:

WATERSHED STORAGE: < 1%

HEADWATERS:	
UNIFORM:	X
IMMEDIATELY ABOVE SITE:	

EXISTING STRUCTURE INFORMATION

STRUCTURE TYPE:	10.5' CMP
YEAR BUILT:	1962
CLEAR SPAN(NORMAL TO STREAM):	10.5'
VERTICAL CLEARANCE ABOVE STREAMBED:	10.5'
WATERWAY OF FULL OPENING:	87 sq. ft.
DISPOSITION OF STRUCTURE:	Destroyed in Irene replaced with 10' Temp. Culvert
TYPE OF MATERIAL UNDER SUBSTRUCTURE:	See Borings

WATER SURFACE ELEVATIONS AT:

Q2.33 =	1,497.3 ft	VELOCITY =	12.5 ft/s
Q10 =	1,500.9	"	16
Q25 =	1,501.8	"	17
Q50 =	1,502.3	"	19
Q100 =	1,502.8	"	19

LONG TERM STREAMBED CHANGES: Lateral Movement

IS THE ROADWAY OVERTOPPED BELOW Q100:	Yes
FREQUENCY:	Q10 and larger
RELIEF ELEVATION:	1498.3'
DISCHARGE OVER ROAD @Q100:	508 cfs

PROPOSED STRUCTURE

STRUCTURE TYPE: Buried Precast Concrete Structure

CLEAR SPAN(NORMAL TO STREAM): 28'-0"
VERTICAL CLEARANCE ABOVE STREAMBED: 9'-7" (crown at inlet)
WATERWAY OF FULL OPENING: 212.4 sf (at inlet)

WATER SURFACE ELEVATIONS AT:

Q2.33 =	1,492.5 ft	VELOCITY=	14.0 ft/s
Q10 =	1,493.0	"	15.4
Q25 =	1,493.3	"	16.1
Q50 =	1,493.5	"	16.5
Q100 =	1,493.7	"	16.9

IS THE ROADWAY OVERTOPPED BELOW Q100: No
FREQUENCY: n/a
RELIEF ELEVATION: 1498.3'
DISCHARGE OVER ROAD @Q100: 0 cfs

AVERAGE LOW ELEVATION OF SUPERSTRUCTURE: 1,498.1 ft (crown of inlet)
VERTICAL CLEARANCE: @ Q50 = 4.6 ft (crown at inlet)

SCOUR: Footings are bearing on bedrock

REQUIRED CHANNEL PROTECTION: Stone Fill, Type IV

PERMIT INFORMATION

AVERAGE DAILY FLOW:	7 cfs	DEPTH OR ELEVATION:
ORDINARY LOW WATER:	2 cfs	0.5 ft
ORDINARY HIGH WATER:	100 cfs	2.0 ft

TEMPORARY BRIDGE REQUIREMENTS

STRUCTURE TYPE: No temporary bridge required. Traffic will use off site detour.
CLEAR SPAN (NORMAL TO STREAM):
VERTICAL CLEARANCE ABOVE STREAMBED:
WATERWAY AREA OF FULL OPENING:

ADDITIONAL INFORMATION

Any temporary culvert/structure used to divert Brandon Brook shall be 8'-0" in diameter or provide 50.3 sq. ft. of waterway area minimum.

GENERAL PROCEDURE:

The GC has proposed this general procedure regarding this Project:

Block stream flow above the work area with sandbag cofferdam. Divert stream flow around and past the work area via a sump with pump(s) and discharge line(s) passing under the existing roadway upstation of the work area through a pipe trenched and buried into the existing roadway fill. By-pass flow will be discharge into the stream below the work area.

A sump with pump(s) as needed will be constructed within the work area. The work area will be dewatered as necessary to perform contract work "in-the-dry". Dewatering discharge will be into an upland sediment trap.

Weather monitoring will be required. If a storm is forecast additional adequate measures are to be at the ready to handle anticipated flow increases. Flow increases can be handled by addition of by-pass pumps in size and number to be determined in the field based on current conditions and anticipated flow increases.

Should a storm occur of flow rate greater than the capacity of the design by-pass system, the by-pass system will be allowed to overtop and the area below the existing bridge allowed to temporarily flood.

WATER CONTROL SYSTEM:

Water Control Requirements:

1. The water control system is to be coordinated with the EPSC work.
2. This work shall consist of the construction, material excavation within, dewatering, maintenance and removal of water control system in accordance with the specifications at locations designated in the Plans or in the Contract.
3. This work shall consist of providing a method for the purpose of constructing, in the dry, a specific foundation or other component of a structure in accordance with Contract requirements.
4. This involves construction, maintenance, and removal of a watertight structure or may involve alternate methods of de-watering and stabilizing the specific site.
5. The Contractor shall obtain any and all necessary permits or clearances for alternate methods.
6. The locations and elevations for excavation shall be as indicated on the Plans.
7. The Engineer may order removal of poor foundation material below the normal designated elevation and replacement with an approved material.
8. Dewatering system elements shown on the plan are approximate
9. Actual location and sizing of dewatering system elements are to be based on current field conditions
10. During the performance of all work under this contract, the Contractor shall adopt such precautions in the conduct of his operation as may be necessary to avoid contaminating ground or surface water.

11. All earthwork, grading, moving of equipment, water control and other operation likely to create silting, shall be so planned and conducted as to minimize pollution in any wetland resource area.
12. Water used for any purpose whatsoever by the Contractor, which has become contaminated with soil, bitumen, salt, concrete or other pollutants shall not be discharged into any wetland resource area.
13. Under no circumstances shall the Contractor discharge pollutants into a wetland resource area.
14. The Contractor shall not store fuel or permit any refueling of construction equipment while such equipment is within 100 feet of any resource area.
15. The contractor shall make all efforts to control the run-off of water and sediment from the project site during path construction.
16. The Contractor shall use such equipment and shall perform his operations in such a manner that boiling or other disturbances of the soil in the construction area will be prevented.
17. He shall keep the area being excavated dry by such means that water will be prevented from entering from the adjacent soils.
18. All dewatering and related earthworks shall be conducted in such a manner as to prevent siltation or contamination of the brook.
19. The pumping discharge shall not be allowed to enter directly into the brook.
20. The water from the work areas shall be pumped to a sediment system in accordance with the EPSC Plan.
21. The Contractor shall provide and maintain ample pumps, pipes and other devices to promptly and continually remove and dispose of water from the excavation areas.
22. The size and configuration of pumps and pipes shall be selected by the contractor.
23. After having served its purpose, the water control system shall become the property of the Contractor and shall be removed by the Contractor from the site subject to the Engineer's approval.

Water Control Procedure:

1. The Water Control System is to control water intrusion into the work areas such that the work can be performed "in-the-dry"
2. Water control includes all dewatering necessary to accomplish existing bridge removal, new bridge base material placement, new bridge construction, and new stream bed construction "in-the-dry"
3. The need and extent of sedimentation systems and dewatering techniques and sedimentation controls needed to control water and sediment at the site are to be determined in the field based on current conditions and the EPSC Plan.
4. Provide the means of removing all sediment from water pumped from the excavation areas
5. Apply pumping operations, installation of sandbags, geotextile fabrics, and all other means to collect, settle, and discharge water back in to the waterway as required during construction
6. Stream diversions shall be conducted in such a manner as to minimize siltation and prevent contamination of the waterway
7. Ensure that water control operations neither cause the accumulation of siltation nor any adverse effect to the water or the environment
8. The effectiveness of the water control method used will vary based on the field conditions at the time at which the work is being performed
9. Weather monitoring will be required.

10. If a storm is forecast additional adequate measures are to be at the ready to handle anticipated flow increases.
11. Flow increases can be handled by addition of by-pass pumps in size and number to be determined in the field based on current conditions and anticipated flow increases.
12. If flows are beyond the capacity of all available measures, the water control system is to be remove, the excavation flooded and all obstacle preventing free flow of the stream removed.
13. The Water Control System is non-permanent and is to not harm the ecology of the waterway, land under water, and surrounding land

Water Control System

1. Employ traffic plan procedures and temporarily reduce travel to one lane
2. Install by-pass discharge line pipe sleeve crossing under existing road
3. Install by-pass sump with pump(s) in stream upstream of cofferdam location with discharge line(s) passing through the pipe conduit to discharge into the stream downstream of the work area
4. Install cofferdam upstream of the work area and below the location of the by-pass sump
5. By-pass the stream flow around the work area and into the stream beyond the work area with the by-pass sump and pump(s)
6. Install berm in on streambed downstream of work area and above by-pass discharge
7. Install dewatering sump(s) and pump(s) as needed and located based on current field conditions for work to be done “in-the-dry”
8. Discharge dewatering into sediment trap
9. Perform contract work
10. Remove Water Control System components

SUPPORTING ANALYSIS:

Stream By-Pass System:

By-Pass Pumps:

The GC desires to design the cofferdam for a single 12" pump setup to handle normal flow as measured in the field by a pump supply representative and reported below:

Below are the flow ranges that I came up with on 5/20/14. According to the plans that you gave me there is a large variation in flow data depending on the season, rainfall etc… I am happy to get together if needed.

Bridge 13: 4850-5050 GPM

Weather monitoring will be required. If a storm is forecast additional adequate measures are to be at the ready to handle anticipated flow increases. Flow increases can be handled by addition of by-pass pumps in size and number to be determined in the field based on current conditions and anticipated flow increases.

To handle anticipated occasional higher flows, two stand-by 12" pumps will be available. Should the capacity of the three pumps be exceeded, the Water Control System will be removed and the stream allowed to flow in the streambed through the work area.

Pump capacity as stated by the supplier,

A 12'' pump is generally good for around 4000 gpm or 12 fps using that flow rate the friction loss is .035/ft of 12'' dia hose/pipe.

Q_{design} = capacity of one 12" pump = 4,000gpm = 8.9cfs
Q_{max} = capacity of three 12" pumps = 12,000gpm = 26.7cfs

Specification Data

SECTION 130, PAGE 1700

APPROXIMATE DIMENSIONS and WEIGHTS

NET WEIGHT: 1485 LBS. (674 KG.)
SHIPPING WEIGHT: 1840LBS. (835 KG.)
EXPORT CRATE: 58 CU. FT. (1,6 CU. M.)

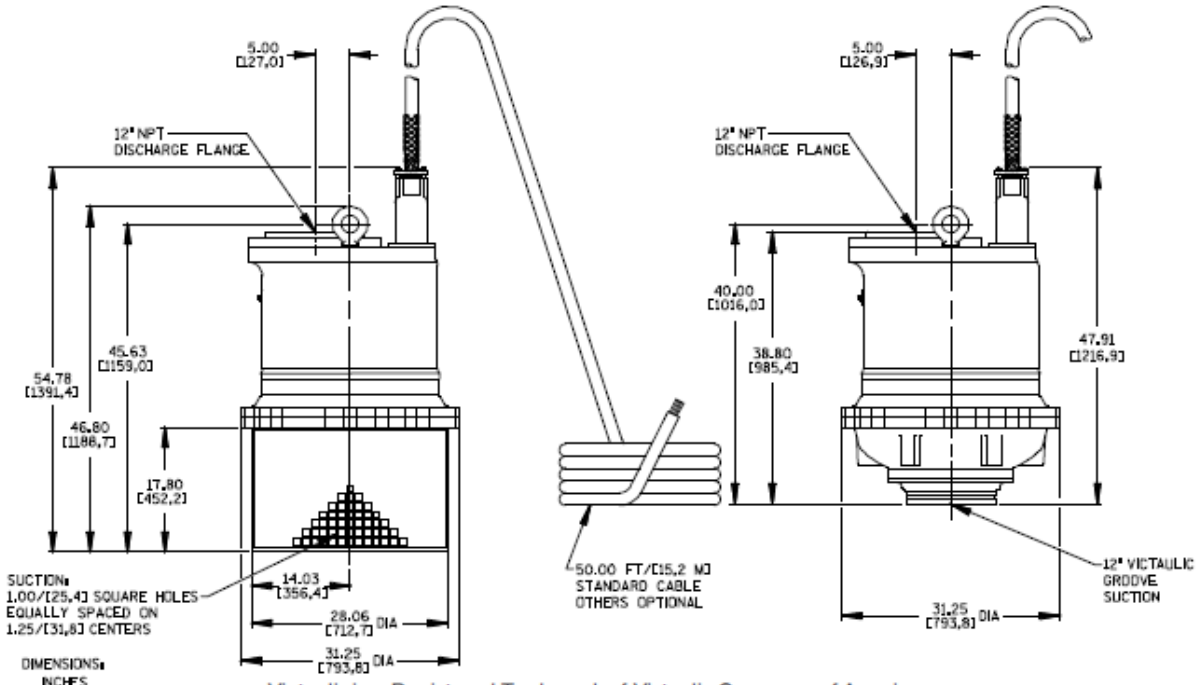

Victaulic is a Registered Trademark of Victaulic Company of America.

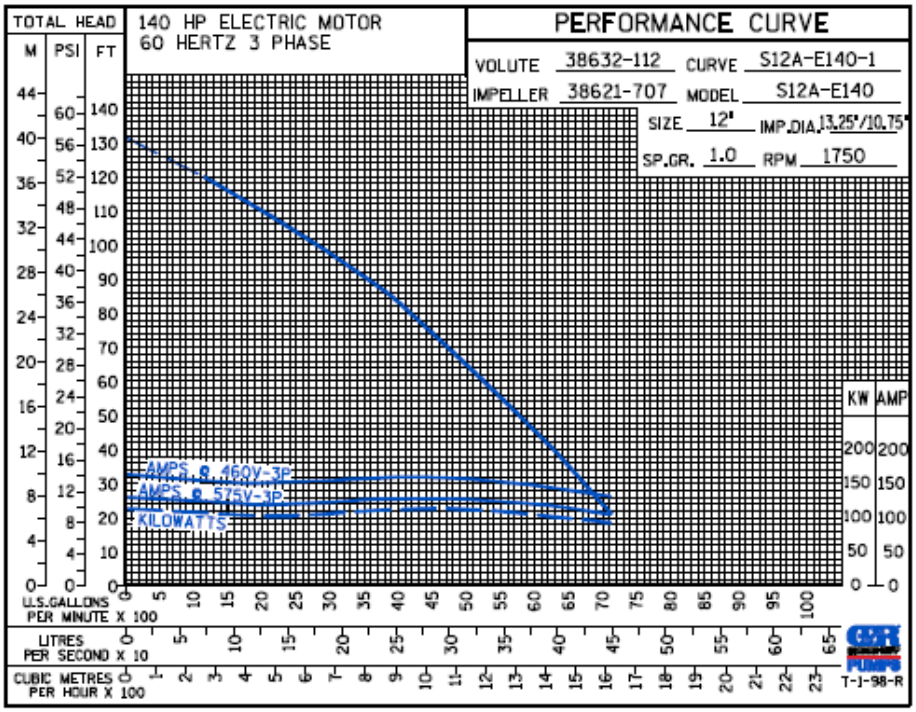

THE GORMAN-RUPP COMPANY • MANSFIELD, OHIO

By-Pass Cofferdam:

The By-Pass Cofferdam will be constructed of sandbags to prevent stream flow from entering the work area. The crest of the cofferdam will be at 6' above the stream bed.

The By-Pass Cofferdam will be constructed of Cubic Yard sand bags 3'x3'x3' in nominal dimension. Large and Small sandbags may be used in its construction to accommodate varying bed elevations and to facilitate sealing.

The By-Pass Cofferdam will be subjected to loads and will be investigated for,

1. Condition 1: water on one side to top

Unless otherwise noted the assumptions used as a basis for the design as applicable are as follows:

- weight of water, γ_w = 62.4pcf
- weight of sand, γ_s' = 125pcf

AASHTO 5.2.2.3 calls for design of overall stability of retaining walls to have a minimum Factor of Safety of 1.3 for static loads and 1.5 for installations with a low tolerance for failure.

Wall Section	Location STA± from	to	Depth from T.O.Wall ft	Wall/Ftg Width ft
1	0+00	0+01	0.00	3.00
			1.00	3.00
			2.00	3.00
			3.00	3.00
			4.00	6.00
			5.00	6.00
			6.00	6.00

W_{stem} = width of stem =	4.29	ft	average
H_{stem} = height of stem =	6.00	ft	
γ_{stem} = density of stem material =	0.135	kcf	
HRE = height toe of ftg to top of retained earth =	6.00	ft	
HBF = height of backfill on front face from BOF =	0.00	ft	
γ'_{soil} = density of soil, wet =	0.135	kcf	
ϕ = friction angle of soil =	30	°	
c = coefficient of friction sandbag/soil = tanϕ =	0.58		

DRIVING FORCES:

WATER Horizontal Load:				1.123	k			2.278	ft-k
Depth from T.O. Wall:									
				F_D		MA		M_D	
0	water	0.000	k	0.000	k	0.00	ft	0.000	ft-k
1	water	0.062	k	0.031	k	5.50	ft	0.172	ft-k
2	water	0.125	k	0.094	k	4.50	ft	0.421	ft-k
3	water	0.187	k	0.156	k	3.50	ft	0.546	ft-k
4	water	0.250	k	0.218	k	2.50	ft	0.546	ft-k
5	water	0.312	k	0.281	k	1.50	ft	0.421	ft-k
6	water	0.374	k	0.343	k	0.50	ft	0.172	ft-k

STREAM FLOW PRESSURE:				0.118	k			0.582	ft-k
P_{max} = maximum stream pressure = $2P_{avg}$ / 1000 =						0.04	ksf	[AASHTO 3.18.1.1.1]	
where :									
$P_{avg} = KV_{avg}^2$ =						22.4	psf		
K = constant for barrier shape =						1.4	for flat face		
V_{avg} = average velocity of water = Q/A =						4	fps		
q = angle of attack =						90	°		
$P = P_{max}\sin\theta$ =						0.04	ksf		
Depth from T.O. Wall:									
	ID			F_D		MA		M_D	
0	stream pressure	0.04	k	0.022	k	6.00	ft	0.134	ft-k
1	stream pressure	0.04	k	0.038	k	5.00	ft	0.192	ft-k
2	stream pressure	0.03	k	0.032	k	4.00	ft	0.128	ft-k
3	stream pressure	0.03	k	0.026	k	3.00	ft	0.077	ft-k
4	stream pressure	0.02	k	0.019	k	2.00	ft	0.038	ft-k
5	stream pressure	0.01	k	0.013	k	1.00	ft	0.013	ft-k
6	stream pressure	0.01	k	0.006	k	0.00	ft	0.000	ft-k

$F_{sliding} = \Sigma F_D$ = **1.24** **k**

$M_{overturning} = \Sigma M_D$ = **2.86** **ft-k**

RESISTING FORCES:

SELF-WEIGHT & VERTICAL LOADS:				3.645	k			10.935	ft-k
Depth from B.O. Excavation:									
	ID			F_V		MA		M_R	
0	Wall	0.000	k	0.000	k	3.00	ft	0.000	ft-k
1	Wall	0.405	k	0.405	k	3.00	ft	1.215	ft-k
2	Wall	0.405	k	0.405	k	3.00	ft	1.215	ft-k
3	Wall	0.405	k	0.405	k	3.00	ft	1.215	ft-k

4	Wall	0.810	k	0.810	k	3.00	ft	2.430	ft-k
5	Wall	0.810	k	0.810	k	3.00	ft	2.430	ft-k
6	Wall	0.810	k	0.810	k	3.00	ft	2.430	ft-k

$F_{resisting} = c\Sigma F_V + \Sigma F_R =$	**2.10**	**k**	>=	1.24	k	FS =	1.69	OK
$M_{resisting} = \Sigma M_R =$	**10.94**	**ft-k**	>=	2.86	ft-k	FS =	3.82	OK