NOTES

1. No crane will be operated in a manner that will exceed its rated capacity at any radius as specified by the crane manufacturer.
2. All work shall be done in accordance with the Standard Specifications section 107.5 J, Electrical Safety as well as the requirements of the utility owner.
In the event electrical distribution and transmission lines are in the area:
Unless electrical distribution and transmission lines are de–energized and visibly grounded at the point of work, or unless insulating barriers not a part of or attached to the crane have been erected to prevent physical contact with lines, cranes may be operated near power lines only in accordance with the following:
   A. Maintain 20 foot clearance; OR
   B. Determine voltage of line from local utility company and use the following clearance distance: Up to 50 kV – minimum clearance distance is 10 ft
      over 50 to 200 kV – mimimum clearance distance is 15 ft
      over 200 to 350 kV – minimum clearance distance is 20 ft
   C. Determination of energized lines. Any overhead line shall be presumed to be energized until the owner of the line indicates that it is not energized.
3. The table or chart prepared by the crane manufacturer to describe the maximum lift at all conditions of loading shall be posted in each crane cab in clear view of the operator.
4. The contractor shall be responsible for verifying the weight of each lift and for insuring the stability of each member during all phases of erection, including lifting and release of the member.
5. MPT shall be provided by the Contractor.
6. All equipment shall be outfitted with operation safety devices.
7. Cranes specified in Erection Procedure.
8. All radii shown are boom point to center of crane rotation. The crane footprint may be shown for information only. the orientation of the crane will be determined per site conditions at the time of erecting.

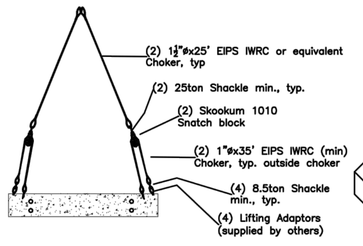

Lift Arches off of truck
SK1
N.T.S.

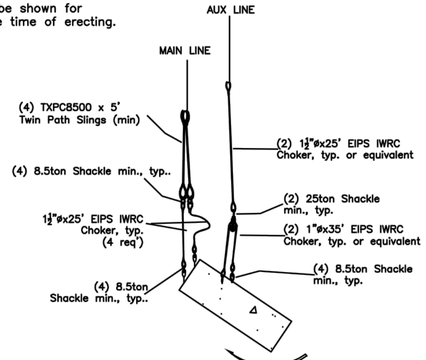

SK2
Upright Arches
N.T.S.

SK3
N.T.S.

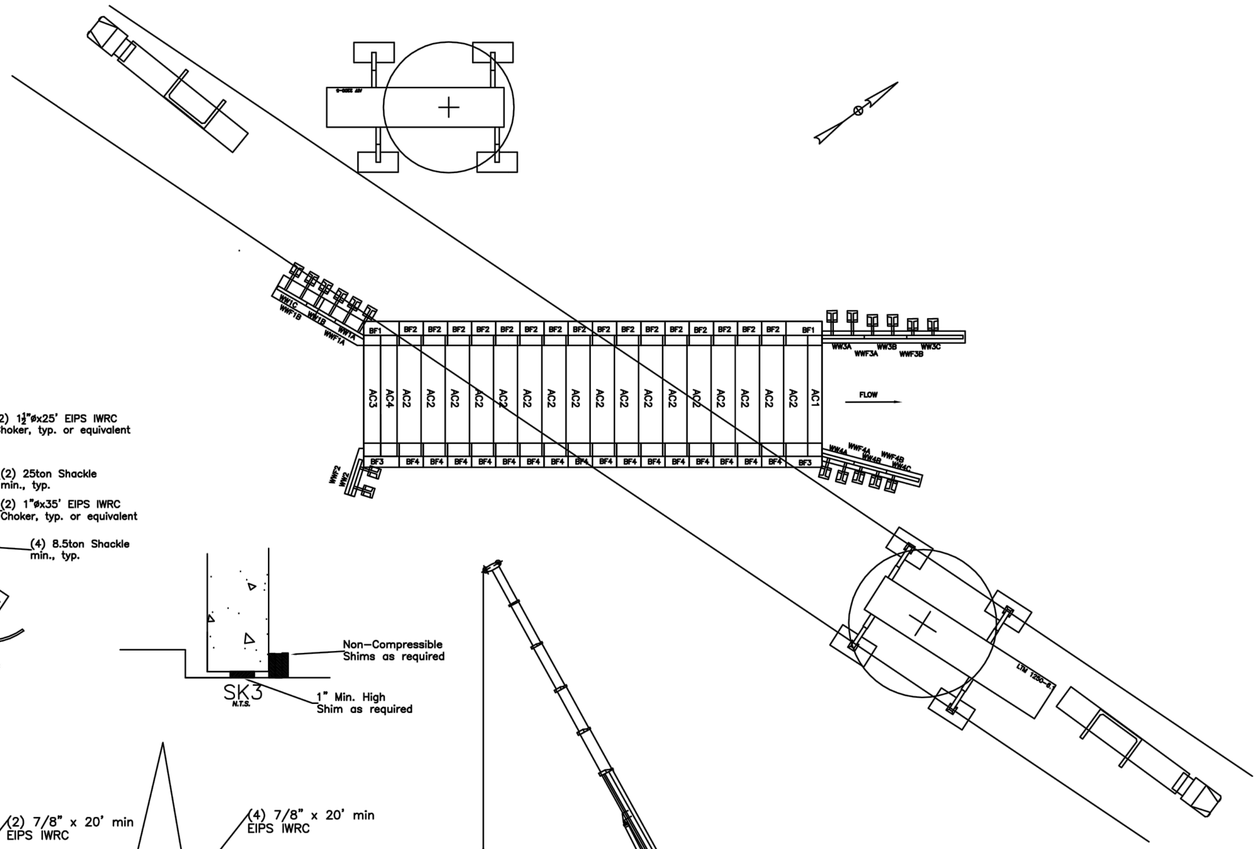

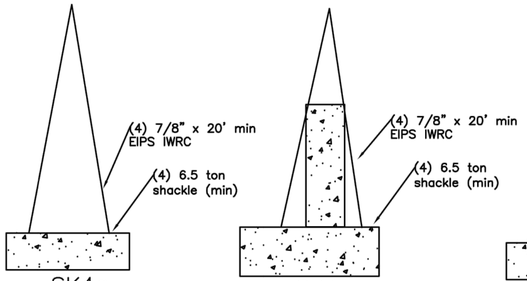

SK4a
Bridge Footings
N.T.S.

SK4b
Bridge Footings
N.T.S.

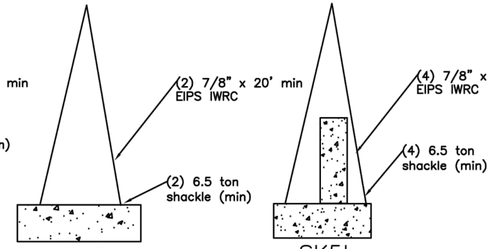

SK5a
Wingwall Footings
N.T.S.

SK5b
Wingwall Footings
N.T.S.

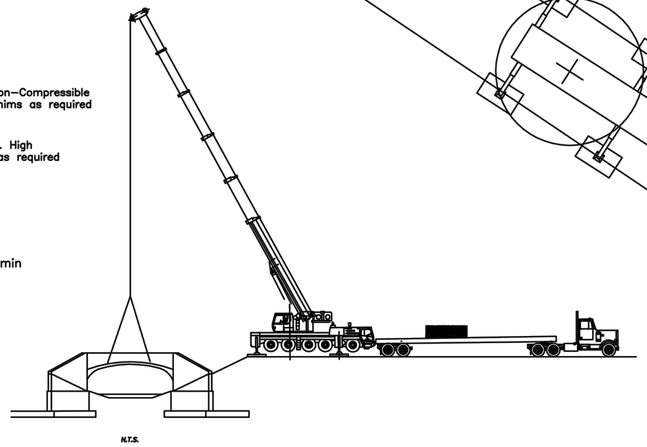

N.T.S.

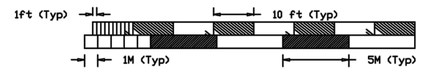

Scale

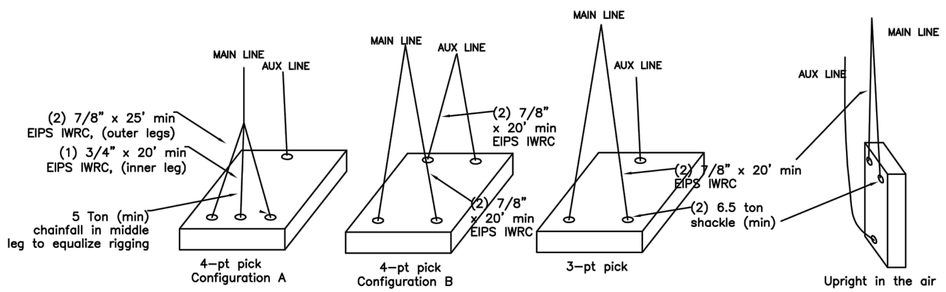

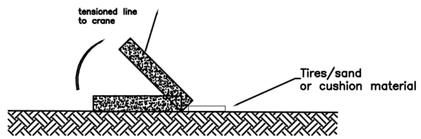

Upright pieces on the ground

SK6
Wingwalls
N.T.S.

	Sym.	Date	Drawn:	Checked
x	4	x	x	x
x	3	x	x	x
x	2	x	x	x
x	1	x	x	x

ERECTOR:
BURT CRANE & RIGGING
5 Veteran's Memorial Drive
Green Island, N.Y. 12183
(518) 271–6858 800–282–2878
FAX (518) 271–6938
EMAIL: INFO@BURTCRANE.COM
HTTP://WWW.BURTCRANE.COM
Beginnings in 1870
BURT crane & rigging

CONTRACTOR: W.M. Schultz Construction

CONTRACT #/LOCATION:
Rochester, Vermont
VT Route 73 – Bridge 13

DRAWN BY: BAH
CHECKED BY: TAVS

SCALE: Per Scale Bar
BCR #: C112430
DATE: 9/5/14
FABRICATORS #: 4653

TITLE OF DRAWING:
Precast Concrete Erection Procedure

DRAWING NO. CE1

Project No: ER STP 0162 (19)

JOB PHONE: X
JOB FAX: X
EIC PHONE: X
FAB PHONE: X

The plans and specifications herein are intended for the subject project only as a result of contractual negotiations between the Contractor and Burt Crane and Rigging. Plans and specifications will be subject to copyright petition and may not be revised or reused by anyone without the written authority of Burt Crane and Rigging.

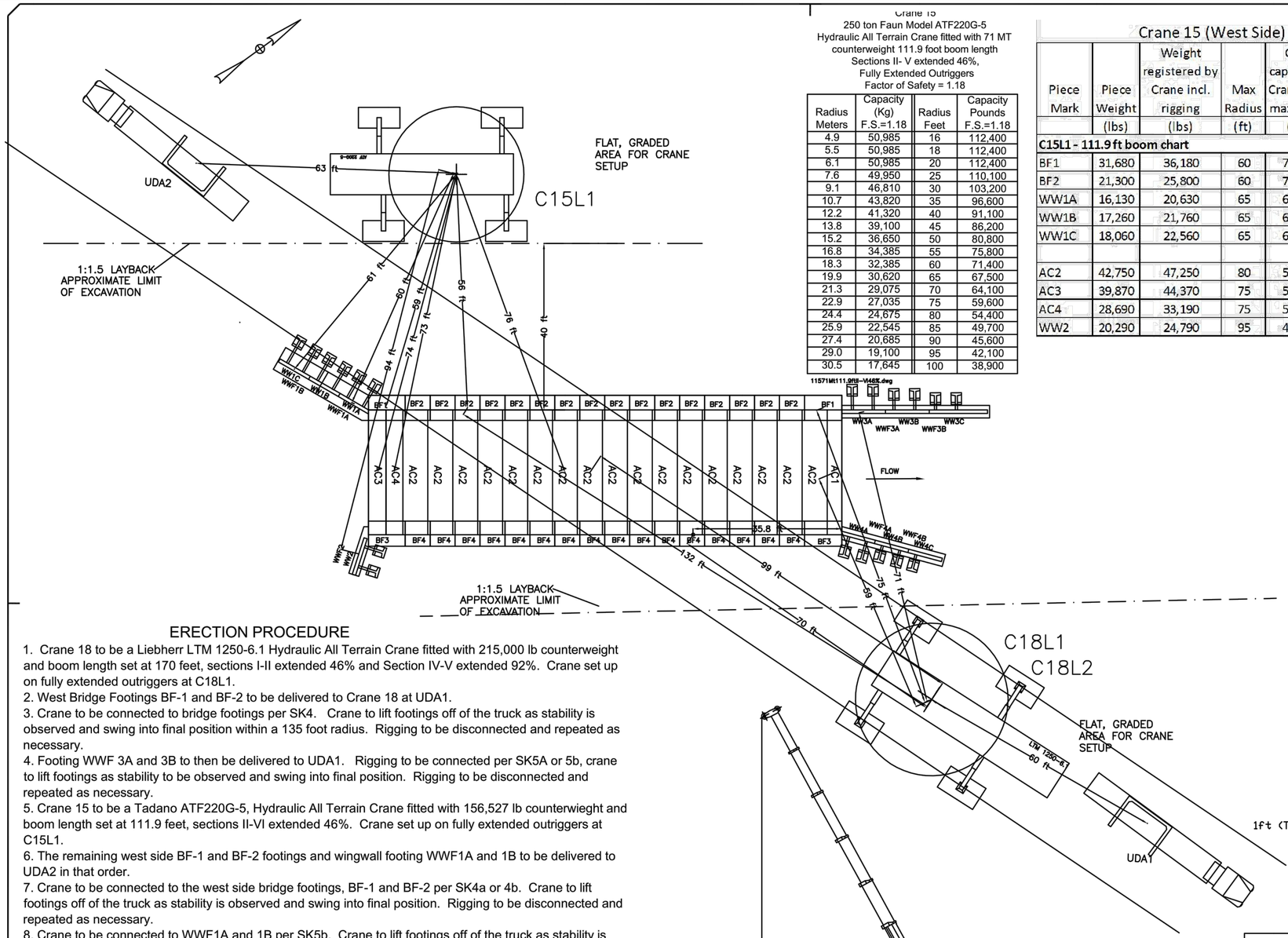

Crane 15
250 ton Faun Model ATF220G-5
Hydraulic All Terrain Crane fitted with 71 MT counterweight 111.9 foot boom length
Sections II- V extended 46%,
Fully Extended Outriggers
Factor of Safety = 1.18

Radius Meters	Capacity (Kg) F.S.=1.18	Radius Feet	Capacity Pounds F.S.=1.18
4.9	50,985	16	112,400
5.5	50,985	18	112,400
6.1	50,985	20	112,400
7.6	49,950	25	110,100
9.1	46,810	30	103,200
10.7	43,820	35	96,600
12.2	41,320	40	91,100
13.8	39,100	45	86,200
15.2	36,650	50	80,800
16.8	34,385	55	75,800
18.3	32,385	60	71,400
19.9	30,620	65	67,500
21.3	29,075	70	64,100
22.9	27,035	75	59,600
24.4	24,675	80	54,400
25.9	22,545	85	49,700
27.4	20,685	90	45,600
29.0	19,100	95	42,100
30.5	17,645	100	38,900

11571Mt111.9ft6-V46%.dwg

Crane 15 (West Side)

Piece Mark	Piece Weight (lbs)	Weight registered by Crane incl. rigging (lbs)	Max Radius (ft)	Chart capacity of Crane 18 at max radius (lbs)	Chart factor of safety
C15L1 - 111.9 ft boom chart					
BF1	31,680	36,180	60	71,400	1.97
BF2	21,300	25,800	60	71,400	2.77
WW1A	16,130	20,630	65	67,500	3.27
WW1B	17,260	21,760	65	67,500	3.10
WW1C	18,060	22,560	65	67,500	2.99
AC2	42,750	47,250	80	54,400	1.15
AC3	39,870	44,370	75	59,600	1.34
AC4	28,690	33,190	75	59,600	1.80
WW2	20,290	24,790	95	42,100	1.70

Crane 18 (East side)

Piece Mark	Piece Weight (lbs)	Weight registered by Crane incl. rigging (lbs)	Max Radius (ft)	Chart capacity of Crane 18 at max radius (lbs)	Chart factor of safety
C18L1 - 170' boom chart					
BF1	31,680	36,180	75	43,700	1.21
BF2	21,300	25,800	135	27,400	1.06
C18L2 - 136' boom chart					
AC1	35,660	40,160	63	89,000	2.22
AC2	42,750	47,250	99	54,300	1.15
WW3A	21,090	25,590	75	76,500	2.99
WW3B	15,250	19,750	75	76,500	3.87
WW3C	10,620	15,120	75	76,500	5.06
WW4A	10,840	15,340	51	104,000	6.78
WW4B	7,940	12,440	51	104,000	8.36
WW4C	5,120	9,620	51	104,000	10.81

Crane 18
Liebherr Model LTM 1250-6.1
Hydraulic All Terrain Crane
Boom Length 136 Feet,
Sections I - V 46%
97 Mton Counterweight
Fully Extended Outriggers; 360 Degrees
Factor of Safety 1.18%

Radius (M)	Capacity (Kg)	Radius (Feet)	Capacity (Pounds)
6.4	60,770	21	134,000
7.3	60,770	24	134,000
8.2	60,770	27	134,000
9.1	59,860	30	132,000
10.1	58,960	33	130,000
11.0	58,500	36	129,000
11.9	56,240	39	124,000
13.7	51,250	45	113,000
15.5	47,170	51	104,000
17.4	43,540	57	96,000
19.2	40,360	63	89,000
21.0	37,410	69	82,500
22.9	34,690	75	76,500
24.7	32,200	81	71,000
26.5	29,480	87	65,000
28.3	26,940	93	59,400
30.2	24,630	99	54,300
32.0	22,630	105	49,900
33.8	20,820	111	45,900
35.7	18,460	117	40,700
37.5	15,460	123	34,100

11897Mt136ft4646464646

Crane 18
Liebherr Model LTM 1250-6.1
Hydraulic All Terrain Crane
Boom Length 170 Feet,
Sections I - III 46%, IV - V 92%
97 Mton Counterweight
Fully Extended Outriggers; 360 Degrees
Factor of Safety 1.18%

Radius (M)	Capacity (Kg)	Radius (Feet)	Capacity (Pounds)
8.2	31,070	27	68,500
9.1	31,070	30	68,500
10.1	31,070	33	68,500
11.0	30,610	36	67,500
11.9	29,710	39	65,500
13.7	27,660	45	61,000
15.5	27,030	51	59,600
17.4	23,990	57	52,900
19.2	22,450	63	49,500
21.0	21,040	69	46,400
22.9	19,820	75	43,700
24.7	18,780	81	41,400
26.5	17,820	87	39,300
28.3	16,960	93	37,400
30.2	16,100	99	35,500
32.0	15,330	105	33,800
33.8	14,510	111	32,000
35.7	13,920	117	30,700
37.5	13,380	123	29,500
39.3	12,880	129	28,400
41.1	12,430	135	27,400
43.0	11,930	141	26,300
44.8	11,520	147	25,400
46.6	11,070	153	24,400

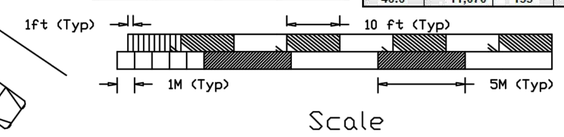

ERECTION PROCEDURE

1. Crane 18 to be a Liebherr LTM 1250-6.1 Hydraulic All Terrain Crane fitted with 215,000 lb counterweight and boom length set at 170 feet, sections I-II extended 46% and Section IV-V extended 92%. Crane set up on fully extended outriggers at C18L1.
2. West Bridge Footings BF-1 and BF-2 to be delivered to Crane 18 at UDA1.
3. Crane to be connected to bridge footings per SK4. Crane to lift footings off of the truck as stability is observed and swing into final position within a 135 foot radius. Rigging to be disconnected and repeated as necessary.
4. Footing WWF 3A and 3B to then be delivered to UDA1. Rigging to be connected per SK5A or 5b, crane to lift footings as stability to be observed and swing into final position. Rigging to be disconnected and repeated as necessary.
5. Crane 15 to be a Tadano ATF220G-5, Hydraulic All Terrain Crane fitted with 156,527 lb counterwieght and boom length set at 111.9 feet, sections II-VI extended 46%. Crane set up on fully extended outriggers at C15L1.
6. The remaining west side BF-1 and BF-2 footings and wingwall footing WWF1A and 1B to be delivered to UDA2 in that order.
7. Crane to be connected to the west side bridge footings, BF-1 and BF-2 per SK4a or 4b. Crane to lift footings off of the truck as stability is observed and swing into final position. Rigging to be disconnected and repeated as necessary.
8. Crane to be connected to WWF1A and 1B per SK5b. Crane to lift footings off of the truck as stability is observed and swing into final position. Rigging to be disconnected and repeated as necessary.
9. Crane 18 to be a Liebherr LTM 1250-6.1 Hydraulic All Terrain Crane fitted with 215,000 lb counterweight and boom length set at 136 feet, sections I-V extended 46%. Crane set up on fully extended outriggers at C18L2.
10. Crane to be connected to arch sections per SK1. Crane to lift sections off of the truck as stability is observed and upright sections as shown in SK2.
11. Arch unit to then be lifted to footings within a 99' radius. Unit to be set on shims set to elevation per SK3 by others. Once positioned, ends of unit to be shimmed tight per SK3, crane to be disconnected. Procedure to be repeated as directed.
12. Wingwalls WW3A - 3C and WW4A - WW4C to be delivered to UDA1. Wingwalls to be set using the same procedure as that used to set wingwalls above.
13. The remaining AC 1,2 and 3 units to be delivered to UDA 2. Crane 15 to set these units using the same procedure as that described above for C18.
14. Inlet wingwalls WW1A - WW1C and WW2 to be delivered to UDA2. Crane 15 to set these wingwalls using the same procedure as that used to set the previous wingwalls above. Rigging to be disconnected and procedure repeated.

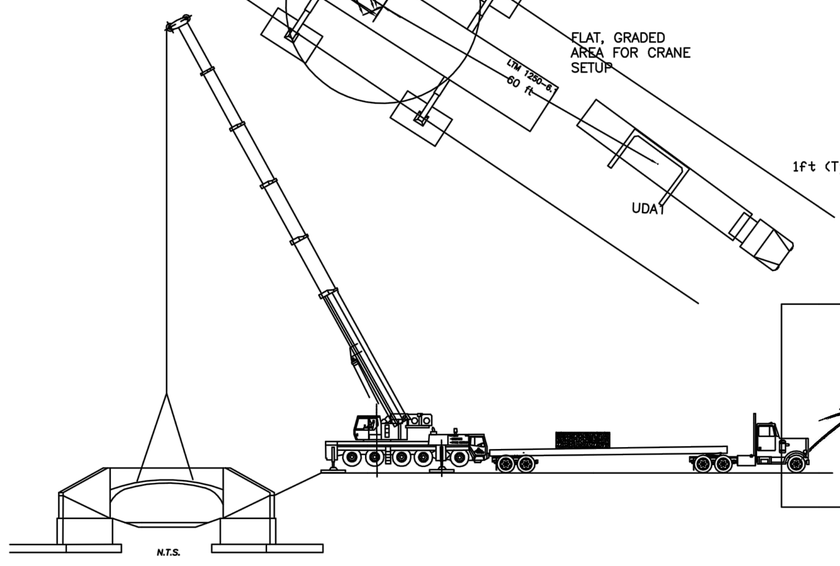

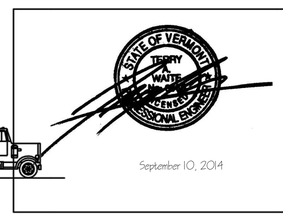

	Sym.	Date	Drawn:	Checked
x	4	x	x	x
x	3	x	x	x
x	2	x	x	x
x	1	x	x	x

ERECTOR:
BURT CRANE & RIGGING
5 Veteran's Memorial Drive
Green Island, N.Y. 12183
(518) 271-6858 800-282-2878
FAX (518) 271-6938
EMAIL: INFO@BURTCRANE.COM
HTTP://WWW.BURTCRANE.COM
Beginnings in 1870 BURT crane & rigging

CONTRACTOR: W.M. Schultz Construction

CONTRACT #/LOCATION: Rochester, Vermont
VT Route 73 – Bridge 13

SCALE: Per Scale Bar
BCR #: C112430
DATE: 9/5/14
FABRICATORS #: 4653

TITLE OF DRAWING: Precast Concrete Erection Procedure

Project No: ER STP 0162 (19)

DRAWN BY: BAH
CHECKED BY: TAVS
DRAWING NO. CE2

JOB PHONE: X
JOB FAX: X
EIC PHONE: X
FAB PHONE: X

The plans and specifications herein are intended for the subject project only as a result of contractual negotiations between the Contractor and Burt Crane and Rigging. Plans and specifications will be subject to copyright petition and may not be revised or reused by anyone without the written authority of Burt Crane and Rigging.

DOCUMENT: 140404C

Bridge 13 Erection Plan
For Crane Lifts

-

For The Project:
Proposed Improvement Bridge Project Bridge No. 13, 15, 16 & 19 – Rochester, VT
Vtrans ER BRF 0162(19), (16), (17) & (18)

-

for

SCHULTZ CONSTRUCTION, INC.

by

TAW ASSOCIATES

September 10, 2014

TABLE OF CONTENTS

TABLE OF CONTENTS ***2***
SCOPE ***3***
EXISTING CONDITIONS ***3***
PROCEDURE ***4***
Erection Procedure: **4**
Erection Sequence: **5**
SUPPORTING COMPUTATIONS: ***7***
Loading: **7**
Rigging: **9**
EQUIPMENT ***21***
Crane: **22**

SCOPE

Provide plan for the erection of certain precast concrete segments of Bridge 13 for the Project using Cranes for lifts.

EXISTING CONDITIONS

Existing conditions as used in this design are those taken from Contract Documents.

PROCEDURE

This document is supplemented by drawings titled "Precast Concrete Erection Procedure", shts CE1 and CE2, dated 9/5/14, for Project No: ER STP 0162 (19), by Burt Crane & Rigging. Refer to drawings for details.

Erection Procedure:

ERECTION PROCEDURE

1. Crane 18 to be a Liebherr LTM 1250-6.1 Hydraulic All Terrain Crane fitted with 215,000 lb counterweight and boom length set at 170 feet, sections I-II extended 46% and Section IV-V extended 92%. Crane set up on fully extended outriggers at C18L1.
2. West Bridge Footings BF-1 and BF-2 to be delivered to Crane 18 at UDA1.
3. Crane to be connected to bridge footings per SK4. Crane to lift footings off of the truck as stability is observed and swing into final position within a 135 foot radius. Rigging to be disconnected and repeated as necessary.
4. Footing WWF 3A and 3B to then be delivered to UDA1. Rigging to be connected per SK5A or 5b, crane to lift footings as stability to be observed and swing into final position. Rigging to be disconnected and repeated as necessary.
5. Crane 15 to be a Tadano ATF220G-5, Hydraulic All Terrain Crane fitted with 156,527 lb counterwieght and boom length set at 111.9 feet, sections II-VI extended 46%. Crane set up on fully extended outriggers at C15L1.
6. The remaining west side BF-1 and BF-2 footings and wingwall footing WWF1A and 1B to be delivered to UDA2 in that order.
7. Crane to be connected to the west side bridge footings, BF-1 and BF-2 per SK4a or 4b. Crane to lift footings off of the truck as stability is observed and swing into final position. Rigging to be disconnected and repeated as necessary.
8. Crane to be connected to WWF1A and 1B per SK5b. Crane to lift footings off of the truck as stability is observed and swing into final position. Rigging to be disconnected and repeated as necessary.
9. Crane 18 to be a Liebherr LTM 1250-6.1 Hydraulic All Terrain Crane fitted with 215,000 lb counterweight and boom length set at 136 feet, sections I-V extended 46%. Crane set up on fully extended outriggers at C18L2.
10. Crane to be connected to arch sections per SK1. Crane to lift sections off of the truck as stability is observed and upright sections as shown in SK2.
11. Arch unit to then be lifted to footings within a 99' radius. Unit to be set on shims set to elevation per SK3 by others. Once positioned, ends of unit to be shimmed tight per SK3, crane to be disconnected. Procedure to be repeated as directed.
12. Wingwalls WW3A - 3C and WW4A - WW4C to be delivered to UDA1. Wingwalls to be set using the same procedure as that used to set wingwalls above.
13. The remaining AC 1,2 and 3 units to be delivered to UDA 2. Crane 15 to set these units using the same procedure as that described above for C18.
14. Inlet wingwalls WW1A - WW1C and WW2 to be delivered to UDA2. Crane 15 to set these wingwalls using the same procedure as that used to set the previous wingwalls above. Rigging to be disconnected and procedure repeated.

This plan is based on crane lift configurations shown. Configurations may adjusted based on manufacturer's crane lift capacities and safety as determined by qualified personnel to accommodate current field conditions.

Erection Sequence:

Unit #	location	# of picks	Weight
East Side Footings with Link Belt 350 excavator			
BF3	outlet	1	15,330
WWF4A	outlet	1	11,180
WWF4B	outlet	1	11,550
BF4	outlet to inlet	16	10,330
BF3	inlet	1	15,330
WWF2	inlet	1	9,410
West Side Footings with Crane 18 300T Liebherr			
BF1	outlet	1	31,680
WWF3A	outlet	1	15,380
WWF3B	outlet	1	15,380
BF2	outlet to inlet	14 or 15	21,300
West Side Footings with Crane 15 250T Faun			
BF2	inlet	1 or 2	21,300
BF1	outlet	1	31,680
WWF1A	inlet	1	41,410
WWF1B	inlet	1	46,600
Arches with Crane 18 from East Side			
AC1	outlet	1	35,660
AC2	outlet to inlet	10	42,750
Wing Walls with Crane 18 from East Side			

WW3A	outlet	1	21,090	
WW3B	outlet	1	15,250	
WW3C	outlet	1	10,620	
WW4A	outlet	1	10,840	option to set with excavator
WW4B	outlet	1	7,940	option to set with excavator
WW4C	outlet	1	5,120	option to set with excavator

Arches with Crane 15 from West Side

AC2	outlet to inlet	7	42,750
AC4	inlet	1	28,690
AC3	inlet	1	39,870

Wing Walls with Crane 15 from West Side

WW2	inlet	1	20,290
WW1A	inlet	1	16,130
WW1B	inlet	1	17,260
WW1C	inlet	1	18,060

See Equipment Section for equipment information.

SUPPORTING COMPUTATIONS:

Loading:

The precast segment weights as provided by the supplier are:

Qty	Unit	Product Description	Weight	Unit
		***EAST* Side (Rochester) - Precast Concrete Materials**		
		Bridge Footings		
2	ea	Bridge Footing - BF-3	15,330 lbs	ea
16	ea	Bridge Footing - BF-4	10,330 lbs	ea
		Wingwall Footings		
1	ea	Wingwall Footing - WWF-2	9,410 lbs	ea
1	ea	Wingwall Footing - WWF-4A	11,180 lbs	ea
1	ea	Wingwall Footing - WWF-4B	11,550 lbs	ea
		Wingwall Panels		
1	ea	Wingwall Panel - WW-2 - 11'-2" W x 11'-9" H	20,290 lbs	ea
1	ea	Wingwall Panel - WW-4A - 8'-4" W x 9'-4" H	10,840 lbs	ea
1	ea	Wingwall Panel - WW-4B - 8'-4" W x 7'-0-1/2" H	7,940 lbs	ea
1	ea	Wingwall Panel - WW-4C - 8'-4" W x 4'-5-1/4" H	5,120 lbs	ea
		***WEST* Side (Brandon) - Precast Concrete Materials**		
		Arch Bridge Sections		
1	ea	Arch Bridge Section - AC-3 - Inlet End	39,870 lbs	ea
1	ea	Arch Bridge Section - AC-1 - Outlet End	35,660 lbs	ea
1	ea	Arch Bridge Section - AC-4 - Narrow Mid.	28,690 lbs	ea
17	ea	Arch Bridge Section - AC-2 - Standard Mid.	42,750 lbs	ea
		Bridge Footings		
2	ea	Bridge Footing - BF-1	31,680 lbs	ea
16	ea	Bridge Footing - BF-2	21,300 lbs	ea
		Wingwall Footings		
1	ea	Wingwall Footing - WWF-1A	41,410 lbs	ea
1	ea	Wingwall Footing - WWF-1B	46,600 lbs	ea
1	ea	Wingwall Footing - WWF-3A	15,880 lbs	ea
1	ea	Wingwall Footing - WWF-3B	15,880 lbs	ea
		Wingwall Panels		
1	ea	Wingwall Panel - WW-1A - 8'-4" W x 13'-4" H	16,130 lbs	ea
1	ea	Wingwall Panel - WW-1B - 8'-4" W x 13'-11" H	17,260 lbs	ea
1	ea	Wingwall Panel - WW-1C - 8'-4" W x 14'-6" H	18,060 lbs	ea
1	ea	Wingwall Panel - WW-3A - 10'-6" W x 15'-6" H	21,090 lbs	ea
1	ea	Wingwall Panel - WW-3B - 10'-6" W x 11'-9-1/2" H	15,250 lbs	ea
1	ea	Wingwall Panel - WW-3C - 14'-0" W x 7'-8" H	10,620 lbs	ea

The segments highlighted in yellow are to be picked using the Excavator in accordance with this plan. Non-highlighted segments are to be picked in accordance with a plan by others.

MEMBER I.D.	PICK WEIGHT lbs	LIFT POINTS ea	LIFT PER POINT lbs
BF1	31,680	4	7,920
BF2	21,300	4	5,325
BF3	15,330	4	3,833
BF4	10,330	4	2,583
WWF1A	41,410	4	10,353
WWF1B	46,600	4	11,650
WWF2	9,410	2	4,705
WWF3A	15,880	2	7,940
WWF3B	15,880	2	7,940
WWF4A	11,180	2	5,590
WWF4B	11,550	2	5,775
AC1	35,660	4	8,915
AC2	42,750	4	10,688
AC3	39,870	4	9,968
AC4	28,690	4	7,173
WW1A	16,130	2	8,065
WW1B	17,260	2	8,630
WW1C	18,060	2	9,030
WW2	20,290	2	10,145
WW3A	21,090	3	7,030
WW3B	15,250	2	7,625
WW3C	10,620	2	5,310
WW4A	10,840	2	5,420
WW4B	7,940	2	3,970
WW4C	5,120	2	2,560

Design rigging for max load,

$$\mathbf{P_{design} = 11{,}650lbs / \sin 60° = 13{,}452lbs}$$

Rigging:

$T = P_{design} = 13{,}452\text{lbs}$

Muncy™ Teacup Fittings

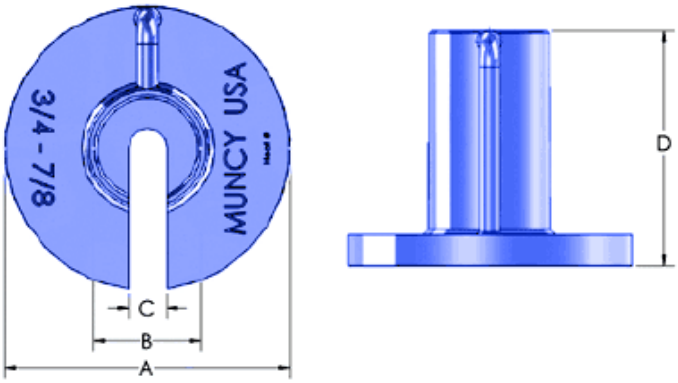

- An efficient way to handle concrete pipes
- Light weight design
- Available with 7" and 12" diameter flanges.
- To be used with our special Muncy™ Machine NB Buttons

Stock No.	Rope Size	Dimensions					Use With Muncy Button
		A	B	C	D	Weight	
TC-24	3/4" - 7/8"	7.00	2.50	0.938	5.75	9.5 lbs	NB-24, NB-28
TC-32	1" - 1-1/8"	7.00	2.50	1.250	5.75	9.5 lbs	NB-32, NB-36
TC-40	1-1/4"	7.00	3.00	1.375	5.75	10 lbs	NB-40

Stock No.	Rope Size	Dimensions					Use With Muncy Button
		A	B	C	D	Weight	
TC-24A	3/4" - 7/8"	12.00	2.50	0.938	5.75	26 lbs	NB-24, NB-28
TC-32A	1" - 1-1/8"	12.00	2.50	1.250	5.75	26 lbs	NB-32, NB-36
TC-40A	1-1/4"	12.00	3.00	1.375	5.75	27 lbs	NB-40

RATED CAPACITY

TC-24 / TC-24A	TC-32 / TC-32A	TC-40 / TC-40A
¾" – 10,864-LBS WLL	1" – 19,012-LBS WLL	1-1/4" – 29,100-LBS WLL
7/8" – 14,744-LBS WLL	1-1/8" – 23,280-LBS WLL	

T_{all} = 14,744 > 13,452lbs OK

$T = P_{design} = 13{,}452\text{lbs}$

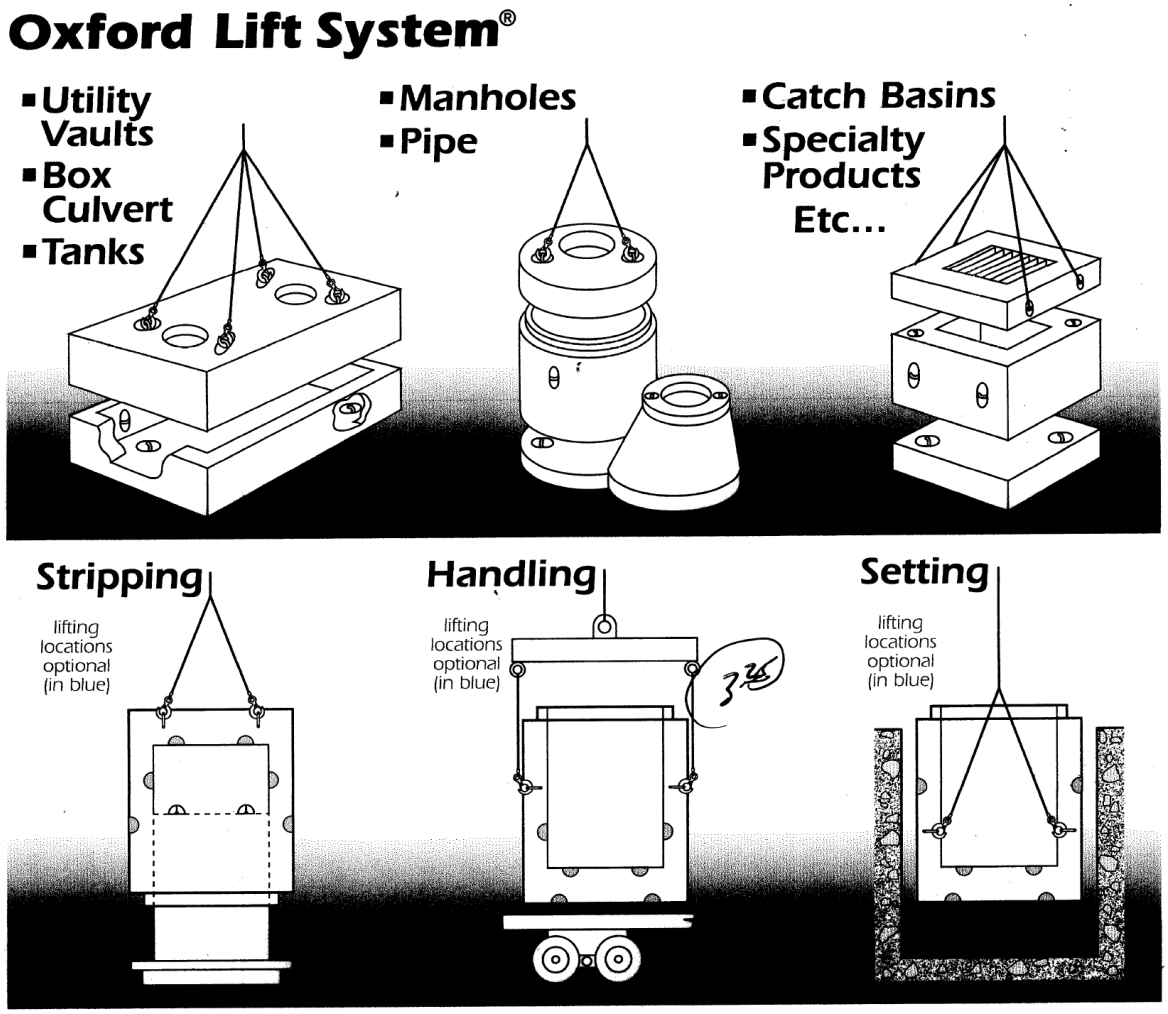

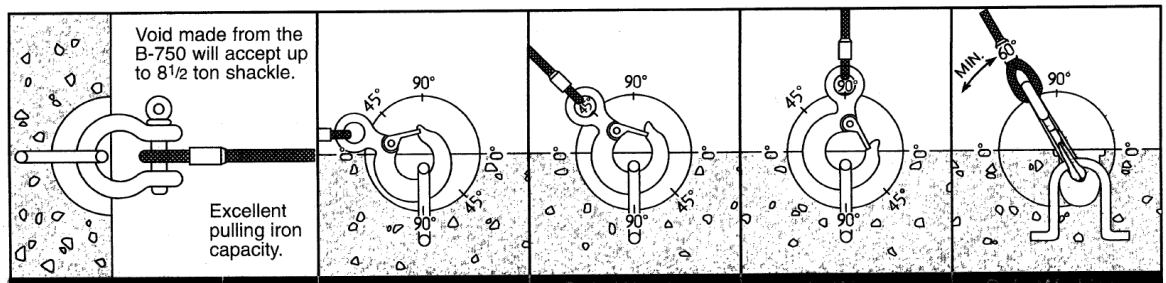

Anchor Product Code	Slab Min inch\s	Safe Working Load @ 90°Shear-0°Pull	Safe Working Load @ 90°Shear-45°Pull	Safe Working Load @ 90°Tension-90°Pull	Safe Working Load @ 90°Shear-60°Pull
A 500-3	4.00"	4,500	4,000	3,500	4,000
A 500-4	5.00"	8,000	5,500	4,000	5,000
A 500-5	6.00"	10,500	6,500	5,000	5,500
A 750-5	6.00"	12,500	8,000	7,000	7,500
A 750-7	8.00"	15,000	12,500	10,000	10,000

NOTE: Safe Working Load provides a factor of safety of approximately 4:1 Test results are based on a minimum concrete compressive strength of 4,000psi.

Oxford Lift System®

Anchors & Accessories

Anchor	Product Code	A	B	C	D	Unit Weight
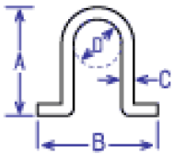	**A 500-3**	3.00"	6.25"	(1/2") .500"	2.00"	.625 lbs.
	A 500-4	4.00"	6.25"	(1/2") .500"	2.00"	.75 lbs.
	A 500-5	5.00"	6.25"	(1/2") .500"	2.00"	.775 lbs.
	A 750-5	4.75"	7.50"	(3/4") .750"	3.00"	1.75 lbs.
	A 750-7	6.75"	7.50"	(3/4") .750"	3.00"	2.00 lbs.
Block Out	**Product Code**	**A**	**B**	**C**	**D**	**Unit Weight**
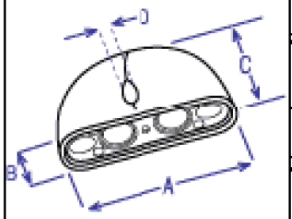	**B 500**	7.00"	2.00"	3.00"	(1/2") .500"	1.10 lbs.
	Void Dimensions Shown without Anchor					
	B 750	8.00"	3.00"	4.00"	(3/4") .750"	3.50 lbs.
	Void Dimensions Shown without Anchor					
Mounting Plate	**Product Code**	**A**	**B**	**C**	**D**	**Unit Weight**
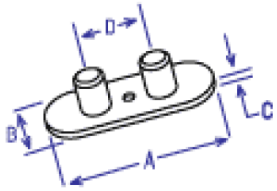	**SMP 500** (Snap-On Mounting Plate)	6.50"	1.50"	(3/8") .375"	2.25"	7.95 lbs.
	MMP 500 (Magnetic Mounting Plate)	6.50"	1.50"	(3/8") .375"	2.25"	.900 lbs.
	SMP 750 (Snap-On Mounting Plate)	7.25"	2.25"	(3/8") .375"	2.25"	1.75 lbs.
	MMP 750 (Magnetic Mounting Plate)	7.25"	2.25"	(3/8") .375"	2.25"	2.00 lbs.
Original Sink-It	**Product Code**	**A**	**B**	**C**	**D**	**Unit Weight**
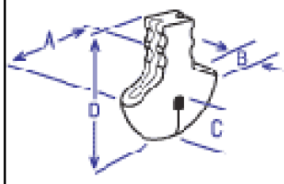	**S 150**	6.00"	1.50"	2.50"	6.75"	1.50 lbs.
	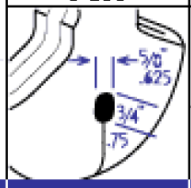	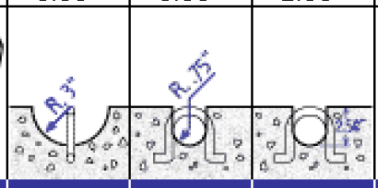				
S-300 Sink-It	**Product Code**	**A**	**B**	**C**	**D**	**Unit Weight**
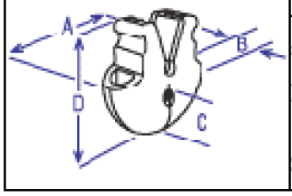	**S 300**	8.00"	3.00"	3.50"	8.00"	4.00 lbs.
	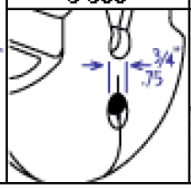	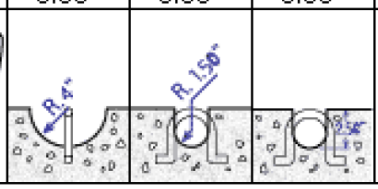				

T_{all} = 10,000 < 13,452lbs NG!! Use only on picks with lift point loads 8,660 lbs or less

$T = P_{design} = 13{,}452$lbs

Precast Products Manual

Rapid Lift System Anchors

(6060) **RL-24 PLATE ANCHOR**
2-Ton, 4-Ton and 8-Ton

The RL-24 Plate Anchor is designed with a plate welded to the bottom to provide high pullout strength with a low profile. This design makes the anchor ideal for face and back lifts of thin-wall units and stripping, handling and erection applications. The Plate Anchor is available in the sizes shown in the table and in plain or hot dip galvanize finish.

See Ring clutches on page 46, 47, and 48, and the Recessing Members on page 49, 50 and 53.

Reinforcing Recommendation:
Crisscross the lower plate of the anchor with four (4) 18" long #4 rebar as shown in the sketch.

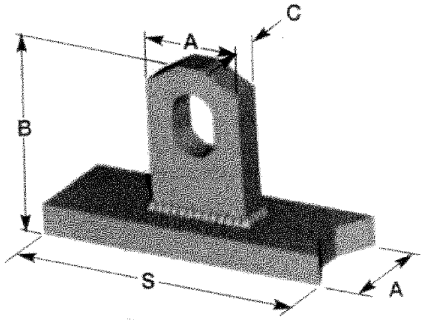

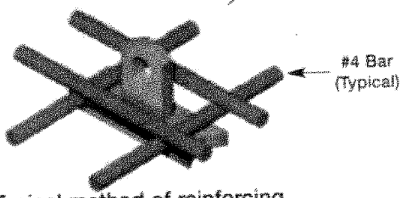

Typical method of reinforcing Plate Anchors

36 **NOTE:** The Plate Anchor has allowable face shear loads that are equal to or greater than the face tension loads for anchors located in a panel or concrete unit at a distance of at least 3B+A from the edges.

RL-24 RAPID LIFT PLATE ANCHOR DATA

Ring Clutch System	Clutch I.D.	Item Number	A	B	C	S	Allowable Unreinforced Tension Load 4:1 SF (lbs)	Allowable Reinforced Tension Load 4:1 SF (lbs)	Ultimate Mechanical Load Tension (lbs)	Weight Per Piece (lbs)
2T/2.5T	2.5T	79128	1 1/4"	2 1/4"	3/8"	3 3/4"	952	4,000	16,000	0.71
4T/5T	5T	45846[3]	1 1/2"	3"	5/8"	3"	3,574	8,000	32,000	1.21
4T/5T	5T	45847[3]	1 1/2"	3 1/2"	5/8"	3"	4,700	8,000	32,000	1.31
4T/5T	5T	79044	1 1/2"	4 3/8"	5/8"	3 7/8"	4,732	8,000	32,000	1.91
8T/10T	10T	79054	2 1/2"	6 1/4"	3/4"	5"	6,350	12,000	64,000	4.29
8T/10T	10T	79043	–	7 1/8"	Discontinued: See Plate Anchor Item 79042					
8T/10T	10T	79042	2 1/2"	7 1/8"	3/4"	5"	10,000	16,000	64,000	5.55

1) Table is based on dead load only, 150 PCF and a standard concrete compressive strength of 3,500 psi and a minimum edge distance of (3B+A)/2.
2) Tension values shown are based on 3,000 psi standard weight concrete, a minimum edge distance of 10" and #4 rebar cut to 18" lengths reinforcing the anchor as shown in the sketch.
3) Available with plate anchor base.

To Order, Specify: quantity, name, item number and finish.

(6190) **RL-60 PLATE ANCHOR BASE**
4-Ton

The RL-60 Plate Anchor Base is a plastic base designed for use with specific RL-24 Plate Anchor 4-Ton units (item numbers 45846 and 45847) to hold and position the anchors in face lift applications.

To Order, Specify: quantity, name and item number.

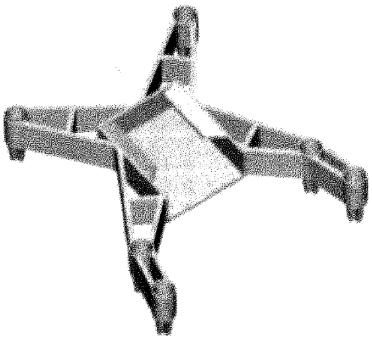

MeadowBurke® MB0113 www.MeadowBurke.com

$T_{all} = 10{,}000 < 13{,}452$lbs NG!! Use only on picks with lift point loads 8,660lbs or less

$T = P_{design} = 13{,}452$lbs

PATTERSON Your Single Source Supplier

QUIKLIFT™

ALP2014

QUIKLIFT™ RING CLUTCH

The QUIKLIFT™ Ring Clutch assembly consists of a bail, clutch and curved bolt handle. This unique design allows the bail to rotate at any angle around the clutch without binding. To install, rotate the curved bolt to the opened position and insert the clutch into the recess. To lock onto the anchor, rotate the curved bolt handle until the handle contacts the panel surface.

Available capacities: 2-3Ton, 4-6Ton and 8-10Ton

Maintenance of the Ring Clutch assembly is outlined in QUIKLIFT™ Technical Information located at beginning of QUIKLIFT™ section.

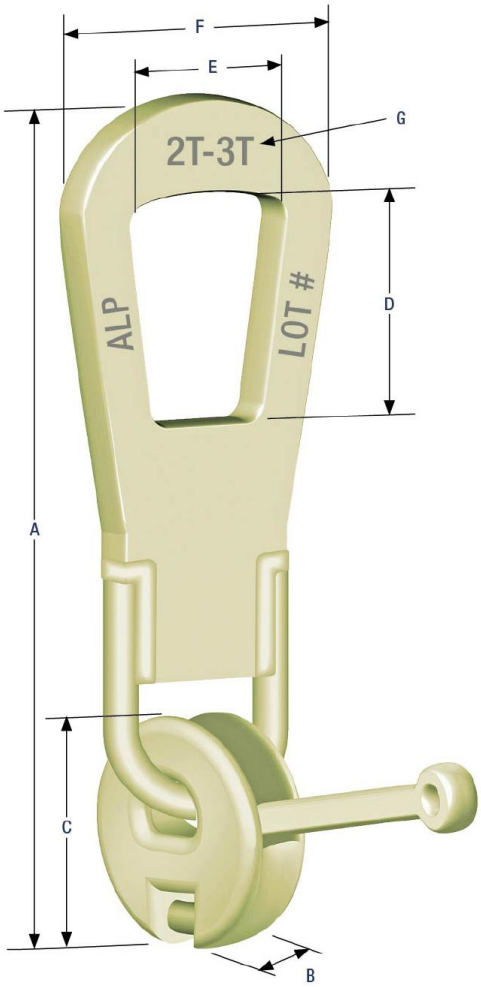

RING CLUTCH DIMENSIONS

Part Number	Ring Clutch System	A	B	C	D	E	F	G	Allowable Tension Load 5:1 SWL (lbs)	Ultimate Capacity in Tension (lbs)	Weight Per Piece (lbs)
QL001	2T-3T	10-5/16"	1-1/8"	3"	3-1/4"	2-1/4"	3-3/4"	2T-3T	6,000	30,000	3.65
QL002	4T-6T	13-1/4"	1-7/16"	3-11/16"	4-1/2"	2-5/8"	4-5/8"	4T-6T	12,000	60,000	7.85
QL003	8T-10T	16-1/2"	2"	5-5/16"	5-3/8"	3-5/8"	5-7/8"	8T-10T	20,000	100,000	20.05

$T_{all} = 20{,}000 > 13{,}452$lbs OK

$T = P_{design} = 13{,}452\text{lbs}$

Crosby® Screw Pin Shackles

Load Rated Fatigue Rated "QT" QUIC-CHECK MAXTOUGH "TA"

SCREW PIN ANCHOR SHACKLES

G-209 S-209

Screw pin anchor shackles meet the performance requirements of Federal Specification RR-C-271D Type IVA, Grade A, Class 2, except for those provisions required of the contractor. For additional information, see page 391.

- Capacities 1/3 thru 55 metric tons.
- Forged - Quenched and Tempered, with alloy pins.
- Working Load Limit permanently shown on every shackle.
- Hot Dip galvanized or Self Colored.
- Fatigue rated.
- Shackles 25t and larger are **RFID EQUIPPED.**
- Shackles can be furnished proof tested with certificates to designated standards, such as ABS, DNV, Lloyds, or other certification. Charges for proof testing and certification available when requested at the time of order.
- Shackles are Quenched and Tempered and can meet DNV impact requirements of 42 joules at -20 C.
- Crosby products meet or exceed all requirements of ASME B30.26 including identification, ductility, design factor, proof load and temperature requirements. Importantly, Crosby products meet other critical performance requirements including fatigue life, impact properties and material traceability, not addressed by ASME B30.26.
- Look for the Red Pin® . . . the mark of genuine Crosby quality.
- Type Approval and certification in accordance with ABS 2006 Steel Vessel Rules 1-1-17.7, and ABS Guide for Certification of Cranes.

SCREW PIN CHAIN SHACKLES

G-210 S-210

Screw pin chain shackles meet the performance requirements of Federal Specification RR-C-271D, Type IVB, Grade A, Class 2, except for those provisions required of the contractor. For additional information, see page 391.

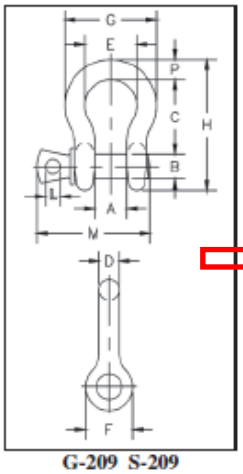

G-209 S-209

Nominal Size (in.)	Working Load Limit (t)*	Stock No. G-209	Stock No. S-209	Weight Each (lbs.)	A	B	C	D	E	F	G	H	L	M	P	Tolerance + / - C	Tolerance + / - A
3/16	1/3	1018357	-	.06	.38	.25	.88	.19	.60	.56	.98	1.47	.16	1.14	.19	.06	.06
1/4	1/2	1018375	1018384	.10	.47	.31	1.13	.25	.78	.61	1.28	1.84	.19	1.43	.25	.06	.06
5/16	3/4	1018393	1018400	.19	.53	.38	1.22	.31	.84	.75	1.47	2.09	.22	1.71	.31	.06	.06
3/8	1	1018419	1018428	.31	.66	.44	1.44	.38	1.03	.91	1.78	2.49	.25	2.02	.38	.13	.06
7/16	1-1/2	1018437	1018446	.38	.75	.50	1.69	.44	1.16	1.06	2.03	2.91	.31	2.37	.44	.13	.06
1/2	2	1018455	1018464	.72	.81	.63	1.88	.50	1.31	1.19	2.31	3.28	.38	2.69	.50	.13	.06
5/8	3-1/4	1018473	1018482	1.37	1.06	.75	2.38	.63	1.69	1.50	2.94	4.19	.44	3.34	.69	.13	.06
3/4	4-3/4	1018491	1018507	2.35	1.25	.88	2.81	.75	2.00	1.81	3.50	4.97	.50	3.97	.81	.25	.06
7/8	6-1/2	1018516	1018525	3.62	1.44	1.00	3.31	.88	2.28	2.09	4.03	5.83	.50	4.50	.97	.25	.06
1	8-1/2	1018534	1018543	5.03	1.69	1.13	3.75	1.00	2.69	2.38	4.69	6.56	.56	5.13	1.06	.25	.06
1-1/8	9-1/2	1018552	1018561	7.41	1.81	1.25	4.25	1.16	2.91	2.69	5.16	7.47	.63	5.71	1.25	.25	.06
1-1/4	12	1018570	1018589	9.50	2.03	1.38	4.69	1.29	3.25	3.00	5.75	8.25	.69	6.25	1.38	.25	.06
1-3/8	13-1/2	1018598	1018605	13.53	2.25	1.50	5.25	1.42	3.63	3.31	6.38	9.16	.75	6.83	1.50	.25	.13
1-1/2	17	1018614	1018623	17.20	2.38	1.63	5.75	1.54	3.88	3.63	6.88	10.00	.81	7.33	1.62	.25	.13
1-3/4	25	1018632	1018641	27.78	2.88	2.00	7.00	1.84	5.00	4.19	8.86	12.34	1.00	9.06	2.25	.25	.13
2	35	1018650	1018669	45.00	3.25	2.25	7.75	2.08	5.75	4.81	9.97	13.68	1.22	10.35	2.40	.25	.13
2-1/2	55	1018678	1018687	85.75	4.13	2.75	10.50	2.71	7.25	5.69	12.87	17.84	1.38	13.00	3.13	.25	.25

* NOTE: Maximum Proof Load is 2.0 times the Working Load Limit. Minimum Ultimate Strength is 6 times the Working Load Limit. For Working Load Limit reduction due to side loading applications, see page 74.

T_{all} = 6 ½ tons = 13,000 lbs approx 13,452lbs OK

$T = P_{design} = 13{,}452\text{lbs}$

BURT crane & rigging
Beginnings in 1970

Utility Rigging Charts

Wire Rope Slings
Eye & Eye 6 x 19 x 6 x 37 - IWRC

ANSI B30.9 -
Design factor 5/1
Rated Capacity (lbs.)

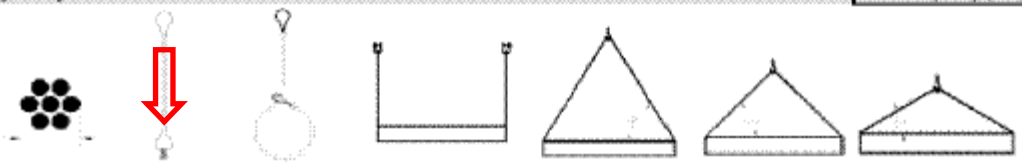

Rope Dia.	Vertical	Choker	Vertical Basket	2 Leg Bridle		
1/4"	1,300	960	2,600	2,200	1,820	1,300
3/8"	2,800	2,200	5,800	5,000	4,000	2,800
1/2"	5,000	3,800	10,200	88,000	7,200	5,000
5/8"	7,800	5,800	15,600	13,600	11,000	7,800
3/4"	11,200	8,200	22,000	19,400	15,800	11,200
7/8"	15,200	11,200	30,000	26,000	22,000	15,200
1"	19,600	14,400	40,000	34,000	28,000	19,600
1-1/8"	24,000	18,200	48,000	42,000	34,000	24,000
1-1/4"	30,000	22,000	60,000	52,000	42,000	30,000
1-1/2"	42,000	32,000	84,000	74,000	60,000	42,000

Chain Slings
Grade 80 Alloy Steel

ANSI B30.9 -
Design factor 5/1
Rated Capacity (lbs.)

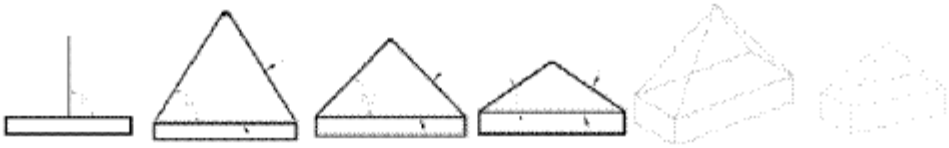

Size of Chain (in)	(mm)	Single	Double Chain Slings 60°	45°	30°	Triple & Quad Chain Slings 60°	45°
9/32"	7	3500	6,100	4,900	3,500	9,100	7,400
3/8"	10	7100	12,300	10,000	7,100	18,400	15,100
1/2"	13	12000	20,800	17,000	12,000	31,200	25,500
5/8"	16	18100	31,300	25,600	18,100	47,000	38,400
3/4"	20	28300	49,000	40,000	28,300	73,500	60,000
7/8"	22	34200	59,200	48,400	34,200	88,900	72,500
1"	26	47700	82,600	67,400	47,700	123,900	101,200
1-1/4"	32	72300	125,200	102,200	72,300	187,800	153,400

T_{all} = 15,200 > 13,452lbs OK

$P = 2 * P_{design} * \sin 60° = 23{,}300\text{lbs}$

SKOOKUM®

MULTI-PURPOSE BLOCKS:
7 Ton to 17.5 Ton WLL

CONSTRUCTION LOGGING MARINE INDUSTRIAL DREDGING DRAGLINE

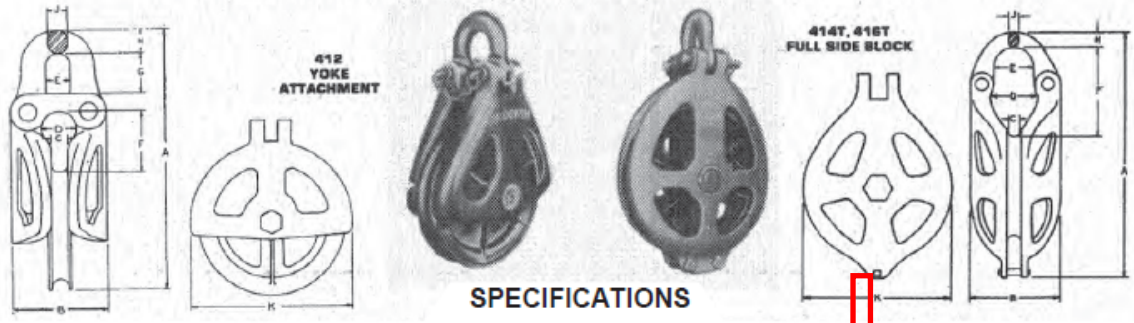

SPECIFICATIONS

	Block Number	Sheave Size	Sheave Pin Size	Line Size	Weight	Working Load*
Timken Bearing	T-6S	6 x 1.250	1.31	3/8	22 lbs	14,000 lbs
	T-8	8 x 1.375	1.31	1/2 to 5/8	32 lbs	16,000 lbs
	T-10S	10 x 1.75	1.31	5/8 to 3/4	44 lbs	16,000 lbs
	T-12A	12 x 2	1.81	3/4 to 7/8	69 lbs	32,000 lbs
	T-14	14 x 2	1.81	3/4 to 7/8	79 lbs	32,000 lbs
	410-A	10 x 2	1.50	3/4	48 lbs	25,000 lbs
	412-A	12 x 2.50	2.00	3/4 to 7/8 *1"	72 lbs	35,000 lbs
	414-A	14 x 2.50	2.00	3/4 to 7/8 *1"	94 lbs	35,000 lbs
	414-T	14 x 2.50	2.00	7/8 *1"	97 lbs	35,000 lbs
	416	16 x 2.50	2.00	3/4 to 7/8 *1"	97 lbs	35,000 lbs
	416-T	16 x 2.50	2.00	7/8 *1"	107 lbs	35,000 lbs
	418	18 x 2.50	2.00	7/8 to 1	108 lbs	35,000 lbs
	1010	10 x 2.50	2.00	7/8 to 1	75 lbs	35,000 lbs
Bronze Bearing	510	10 x 2.50	2.25	7/8 to 1	70 lbs	35,000 lbs
	512	12 x 2.50	2.25	7/8 to 1	80 lbs	35,000 lbs
	514	14 x 2.50	2.25	7/8 to 1	90 lbs	35,000 lbs

*Ultimate strength is 5 times working load. *1" Availabe on request.

DIMENSIONS

Block Number	A	B	C	D	E	F	G	H	I	J
T-6S	11.00	5.50	1.00	2.00	1.38	4.25	2.50	1.13	1.06	6.75
T-8	16.00	5.50	1.00	2.00	1.38	4.25	2.50	1.38	1.31	8.75
T-10S	18.00	5.50	1.38	2.25	1.63	4.25	2.50	1.50	1.31	10.75
T-12A	20.00	5.88	1.50	2.75	2.00	4.50	2.38	1.50	1.31	12.63
T-14	22.00	5.88	1.50	2.75	2.00	3.50	2.38	1.50	1.31	14.75
410-A	18.50	5.50	1.75	2.75	1.75	4.50	2.50	1.50	1.25	11.00
412-A	21.00	6.25	2.00	3.00	2.38	4.75	2.50	1.75	1.63	12.50
414-A	23.00	6.25	2.00	3.00	3.38	4.75	2.50	1.75	1.63	15.00
414-T	25.00	6.25	2.00	3.00	2.38	4.75	----	1.75	1.63	15.00
416	25.00	6.25	2.00	3.00	2.38	4.75	2.50	1.75	1.63	17.00
416-T	27.00	6.25	2.00	3.00	2.38	4.75	----	1.75	1.63	17.00
418	27.00	6.25	2.00	3.00	2.38	4.75	2.50	1.75	1.63	19.00
1010	19.00	6.25	2.00	2.50	2.75	2.00	2.50	2.00	1.75	11.00
510	19.00	6.25	2.00	2.50	2.75	3.50	2.50	2.00	1.88	11.00
512	22.00	6.25	2.00	2.50	2.75	3.50	2.75	2.00	1.88	13.00
514	24.00	6.25	2.00	2.50	2.75	3.50	2.75	2.00	1.88	15.00

P_{all} = 35,000lbs > 23,300lbs OK

$T = P_{design} = 13{,}452\text{lbs}$

SLINGMAX® RIGGING SOLUTIONS — ALWAYS RAISING THE BAR

Home | About Us | Contact

- Home
- Synthetic Slings
- Accessories
- Wire-Rope Slings
- Associated Products
- FAQ
- Technical Bulletins
- Articles
- Photo Gallery
- Quick-Quote
- Dealers Only

Twin-Path® Extra Sling with Covermax® and K-Spec® Core Yarn (Check-Fast® Inspection optional)

US Patent #4,850,629 & #5,651,572 CN #1,280,458 & #2,195,393
Italy #97300367.6 Japan #2929431 Australia #707924

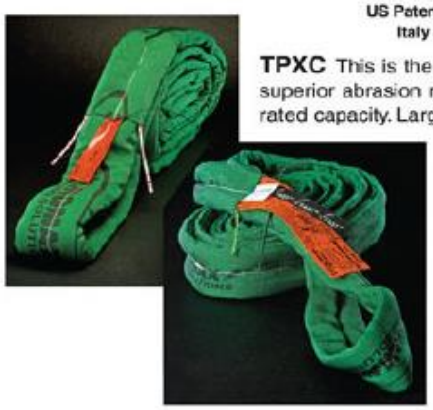

TPXC This is the world's first truly ergonomic sling with Covermax® covers for superior abrasion resistance. These are made in sizes up to 600 tons vertical rated capacity. Larger capacity slings are available on special order. These slings have overload indicators, inner red cover, and are used worldwide in place of wire rope slings for heavy lifts. They are approximately 10% of the weight of a steel sling. These products are repairable. The Twin-Path® patented design provides the rigger with two connections between the hook and the load for redundant back-up protection. These slings have less than 1% stretch at rated capacity. If ergonomics, productivity and safety are important, then these slings are the only choice. This is the lightest and strongest sling on the market today with K-Spec® – the longest lasting load bearing core yarn, backed by independent testing.

Twin-Path® Metric Sling Chart - 5:1 Design Factor

Twin-Path® Metric Sling Chart - 7:1 Design Factor

NOTE: Capacities shown include both paths and are for one complete sling. Sling ratings based on fittings of equal or greater capacity. Conforms to ANSI/ASME B30.9 chapter 6, NAVFAC P307 section 14.6.4.3, and the Cordage Institute Roundsling Standard. This chart is based on a 5:1 Design Factor (DF); but any other DF can be fabricated. Higher capacity slings are available. **CAPACITIES ARE IN POUNDS (LBS.).**

Twin-Path® Sling Stock No.	Vertical	Choker	Vertical Basket	Basket Hitches 60°	Basket Hitches 45°	Approximate Weight (Lbs. per Ft.) (Bearing-Bearing)	Nominal Body Width (Inches)*
TPXCF/TPXC 1000	10,000	8,000	20,000	17,320	14,140	.40	1.5 - 3"
TPXCF/TPXC 1500	15,000	12,000	30,000	25,980	21,210	.45	1.5 - 3"
TPXCF/TPXC 2000	20,000	16,000	40,000	34,640	28,280	.51	1.5 - 3"
TPXCF/TPXC 2500	25,000	20,000	50,000	43,300	35,350	.57	1.5 - 3"
TPXCF/TPXC 3000	30,000	24,000	60,000	51,960	42,420	.71	2.0 - 4"
TPXCF/TPXC 4000	40,000	32,000	80,000	69,280	56,560	.83	2.0 - 4"
TPXCF/TPXC 5000	50,000	40,000	100,000	86,600	70,700	1.14	2.5 - 5"
TPXCF/TPXC 6000	60,000	48,000	120,000	103,920	84,840	1.27	2.5 - 5"
TPXCF/TPXC 7000	70,000	56,000	140,000	121,240	98,980	1.39	2.5 - 5"
TPXCF/TPXC 8500	85,000	68,000	170,000	147,220	120,190	1.65	3.0 - 6"
TPXCF/TPXC 10000	100,000	80,000	200,000	173,200	141,400	1.84	3.0 - 6"
TPXCF/TPXC 12500	125,000	100,000	250,000	216,500	176,750	2.35	4.0 - 8"
TPXCF/TPXC 15000	150,000	120,000	300,000	259,800	212,100	2.66	4.0 - 8"
TPXCF/TPXC 17500	175,000	140,000	350,000	303,100	247,450	3.14	5.0 - 10"
TPXCF/TPXC 20000	200,000	160,000	400,000	346,400	282,800	3.45	5.0 - 10"
TPXCF/TPXC 25000	250,000	200,000	500,000	433,000	353,500	4.07	5.0 - 10"
TPXCF/TPXC 27500	275,000	220,000	550,000	476,300	388,850	4.61	6.0 - 12"
TPXCF/TPXC 30000	300,000	240,000	600,000	519,600	424,200	4.92	6.0 - 12"
TPXCF/TPXC 40000	400,000	320,000	800,000	692,800	565,600	6.54	7.0 - 14"

T_{all} = 85,000lbs > 13,452lbs OK

Lift Capacity Check:

Crane 15
250 ton Faun Model ATF220G-5
Hydraulic All Terrain Crane fitted with 71 MT
counterweight 111.9 foot boom length
Sections II- V extended 46%,
Fully Extended Outriggers
Factor of Safety = 1.18

Radius Meters	Capacity (Kg) F.S.=1.18	Radius Feet	Capacity Pounds F.S.=1.18
4.9	50,985	16	112,400
5.5	50,985	18	112,400
6.1	50,985	20	112,400
7.6	49,950	25	110,100
9.1	46,810	30	103,200
10.7	43,820	35	96,600
12.2	41,320	40	91,100
13.8	39,100	45	86,200
15.2	36,650	50	80,800
16.8	34,385	55	75,800
18.3	32,385	60	71,400
19.9	30,620	65	67,500
21.3	29,075	70	64,100
22.9	27,035	75	59,600
24.4	24,675	80	54,400
25.9	22,545	85	49,700
27.4	20,685	90	45,600
29.0	19,100	95	42,100
30.5	17,645	100	38,900

Crane 15 (West Side)					
Piece Mark	Piece Weight	Weight registered by Crane incl. rigging	Max Radius	Chart capacity of Crane 18 at max radius	Chart factor of safety
	(lbs)	(lbs)	(ft)	(lbs)	
C15L1 - 111.9 ft boom chart					
BF1	31,680	36,180	60	71,400	1.97
BF2	21,300	25,800	60	71,400	2.77
WW1A	16,130	20,630	65	67,500	3.27
WW1B	17,260	21,760	65	67,500	3.10
WW1C	18,060	22,560	65	67,500	2.99
AC2	42,750	47,250	80	54,400	1.15
AC3	39,870	44,370	75	59,600	1.34
AC4	28,690	33,190	75	59,600	1.80
WW2	20,290	24,790	95	42,100	1.70

Crane 18 (East side)					
Piece Mark	Piece Weight	Weight registered by Crane incl. rigging	Max Radius	Chart capacity of Crane 18 at max radius	Chart factor of safety
	(lbs)	(lbs)	(ft)	(lbs)	
C18L1 - 170' boom chart					
BF1	31,680	36,180	75	43,700	1.21
BF2	21,300	25,800	135	27,400	1.06
C18L2 - 136' boom chart					
AC1	35,660	40,160	63	89,000	2.22
AC2	42,750	47,250	99	54,300	1.15
WW3A	21,090	25,590	75	76,500	2.99
WW3B	15,250	19,750	75	76,500	3.87
WW3C	10,620	15,120	75	76,500	5.06
WW4A	10,840	15,340	51	104,000	6.78
WW4B	7,940	12,440	51	104,000	8.36
WW4C	5,120	9,620	51	104,000	10.81

Crane 18			
Liebherr Model LTM 1250-6.1			
Hydraulic All Terrain Crane			
Boom Length 136 Feet,			
Sections I - V 46%			
97 Mton Counterweight			
Fully Extended Outriggers; 360 Degrees			
Factor of Safety 1.18%			
Radius (M)	Capacity (Kg)	Radius (Feet)	Capacity (Pounds)
6.4	60,770	21	134,000
7.3	60,770	24	134,000
8.2	60,770	27	134,000
9.1	59,860	30	132,000
10.1	58,960	33	130,000
11.0	58,500	36	129,000
11.9	56,240	39	124,000
13.7	51,250	45	113,000
15.5	47,170	51	104,000
17.4	43,540	57	96,000
19.2	40,360	63	89,000
21.0	37,410	69	82,500
22.9	34,690	75	76,500
24.7	32,200	81	71,000
26.5	29,480	87	65,000
28.3	26,940	93	59,400
30.2	24,630	99	54,300
32.0	22,630	105	49,900
33.8	20,820	111	45,900
35.7	18,460	117	40,700
37.5	15,460	123	34,100
11897M136ft4646464646			

Crane 18			
Liebherr Model LTM 1250-6.1			
Hydraulic All Terrain Crane			
Boom Length 170 Feet,			
Sections I - III 46%, IV - V 92%			
97 Mton Counterweight			
Fully Extended Outriggers; 360 Degrees			
Factor of Safety 1.18%			
Radius (M)	Capacity (Kg)	Radius (Feet)	Capacity (Pounds)
8.2	31,070	27	68,500
9.1	31,070	30	68,500
10.1	31,070	33	68,500
11.0	30,610	36	67,500
11.9	29,710	39	65,500
13.7	27,660	45	61,000
15.5	27,030	51	59,600
17.4	23,990	57	52,900
19.2	22,450	63	49,500
21.0	21,040	69	46,400
22.9	19,820	75	43,700
24.7	18,780	81	41,400
26.5	17,820	87	39,300
28.3	16,960	93	37,400
30.2	16,100	99	35,500
32.0	15,330	105	33,800
33.8	14,510	111	32,000
35.7	13,920	117	30,700
37.5	13,380	123	29,500
39.3	12,880	129	28,400
41.1	12,430	135	27,400
43.0	11,930	141	26,300
44.8	11,520	147	25,400
46.6	11,070	153	24,400

EQUIPMENT

Crane:

TADANO

ATF220G-5

250 Ton Capacity (223.2 Metric Tons)

ALL TERRAIN CRANE

DIMENSIONS

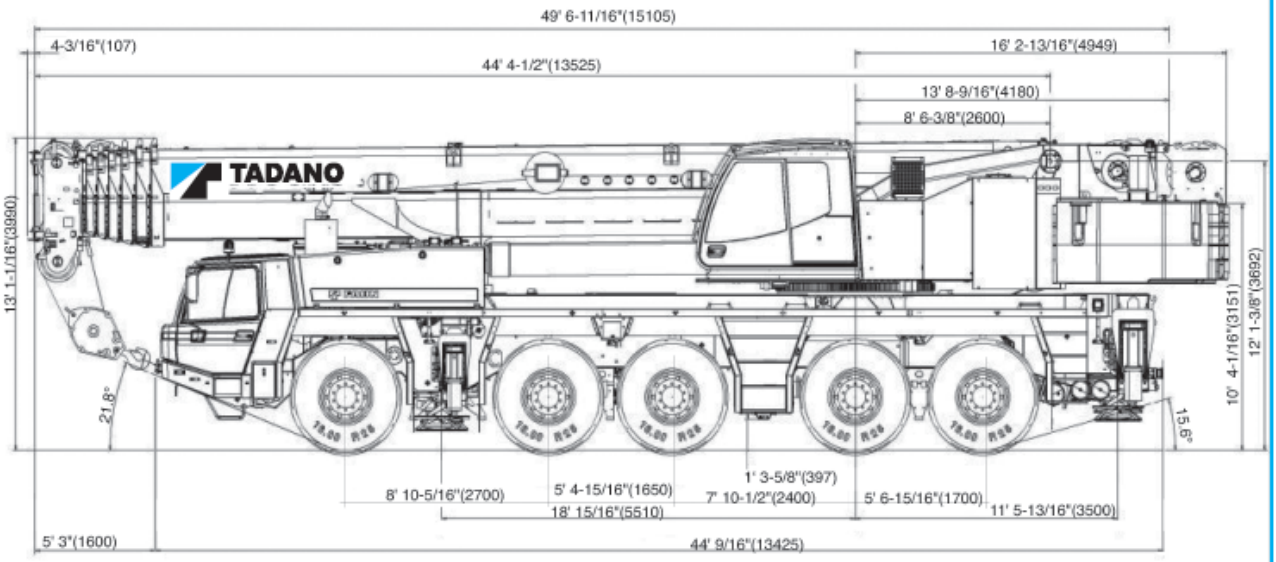

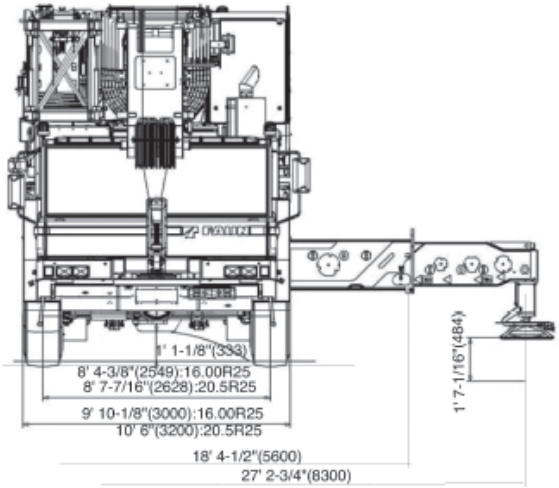

TURNING RADIUS

Steering	All wheel (10x8)
Carrier inside	17' 4-11/16" (5.30m)
Over carrier	35' 9-1/8" (10.90m)
Over boom	38' 11/16" (11.60m)
Over boom extension	40' 4-1/4" (12.30m)

ATF220G-5 WORKING RANGE CHART

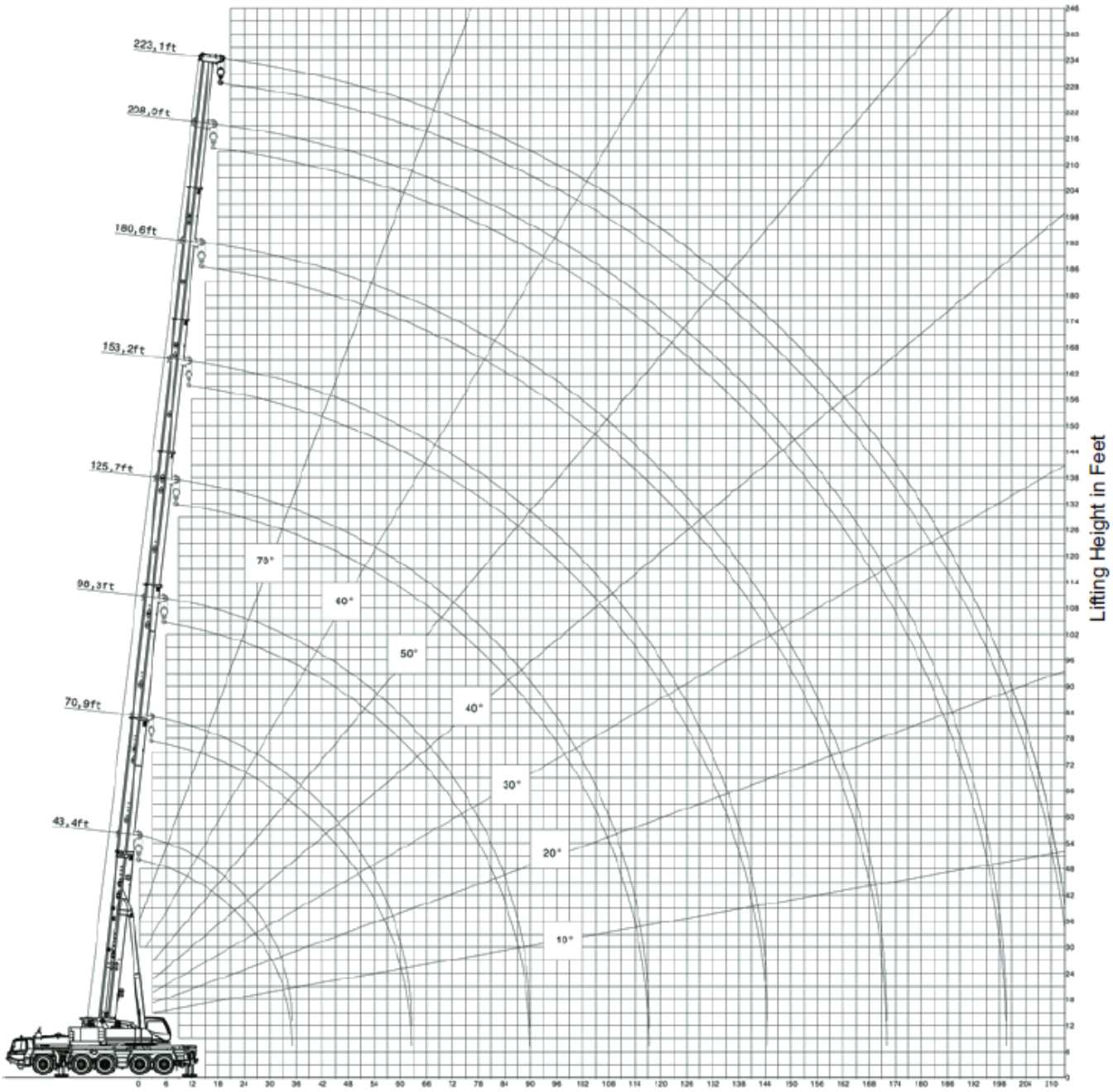

Load radius from Axis of Rotation in Feet

ATF220G-5 TADANO-Load rating chart

Counterweight 156,527 lbs

Working Radius (ft)	Lifting capacities in 1,000 lbs according per SAE J765 on telescopic boom On outriggers, 360° working area **Outrigger base 27.23 ft**																					Working Radius (ft)
	Boom length (ft)																					
	43.3			57.1		57.1		70.9		70.9		70.9		84.6		84.6		84.6		84.6		
	∠°	1)		∠°		∠°		∠°		∠°		∠°		∠°		∠°		∠°		∠°		
8	73	500,0*																				8
9	72	442,1*																				9
10	70	394,6*	385,6*	75	308,6*	75	134.7	79	308,6*	79	140.3	79	100.4	81	251,3*	81	227.1	81	142.7	81	103.5	10
12	67	367,1*	346,1*	73	308,6*	73	126.1	77	308,6*	77	132.6	77	93.1	80	247,5*	80	227.1	80	135.9	80	96.8	12
14	64	341,5*	317,1*	71	305,7*	71	118.9	75	304,5*	75	125.8	75	86.7	78	233.3	78	227.1	78	129.6	78	91.0	14
16	61	306,9*	286,0*	68	284,9*	68	112.2	73	283,5*	73	119.6	73	81.1	77	221.0	77	227.1	77	123.9	77	85.7	16
18	58	274,1*	260,7*	67	260,1*	67	106.5	72	258,5*	72	114.3	72	76.4	76	208.3	76	227.1	76	118.9	76	81.2	18
20	54	244,6*	237.4	65	237.4	65	101.1	70	235.2	70	109.3	70	71.9	74	195.6	74	225.4	74	114.2	74	77.0	20
25	45	194.9	194.3	59	193.4	59	90.4	65	191.5	65	98.8	65	63.0	71	170.4	71	193.0	71	104.1	71	68.4	25
30	33	159.5	159.5	52	158.6	52	82.0	61	156.6	61	90.4	61	55.9	67	150.3	67	157.9	67	95.9	67	61.4	30
35				45	133.2	45	75.2	56	131.4	56	83.0	56	50.5	63	129.9	63	132.6	63	88.9	63	55.5	35
40				36	114.1	36	70.1	50	112.4	50	76.0	50	45.8	59	110.8	59	113.5	59	81.6	59	50.4	40
45				24	99.5	24	66.2	44	97.7	44	69.9	44	42.1	55	96.2	55	98.8	55	74.9	55	46.2	45
50								37	86.1	37	64.8	37	39.1	50	84.6	50	87.1	50	69.3	50	42.7	50
55								29	76.5	29	60.6	29	36.6	45	74.9	45	77.3	45	64.4	45	39.7	55
60								19	68.1	19	57.1	19	34.4	40	67.0	40	69.5	40	60.1	40	37.0	60
65														34	63.0	34	65.3	34	56.5	34	34.7	65
70														25	55.9	25	58.9	25	53.5	25	32.9	70
75																						75
80																						80
85																						85
90																						90
95																						95
100																						100
110																						110
120																						120
130																						130
140																						140
150																						150
160																						160
170																						170
180																						180
190																						190
200																						200
210																						210
Telescoping sequence %																						
Tel. 1	0			0		0		46		0		0		92		46		0		0		Tel. 1
Tel. 2	0			46		0		46		0		0		46		46		0		0		Tel. 2
Tel. 3	0			0		0		0		0		0		0		46		0		0		Tel. 3
Tel. 4	0			0		0		0		0		0		0		0		46		0		Tel. 4
Tel. 5	0			0		0		0		46		0		0		0		46		46		Tel. 5
Tel. 6	0			0		46		0		46		92		0		0		46		92		Tel. 6

1) Over rear with superstructure pin engaged.
* With additional equipment.

Lifting capacities in 1,000 lbs according per SAE J765 on telescopic boom
On outriggers, 360° working area
Outrigger base 27.23 ft

Working Radius (ft)	Boom length (ft)																						Working Radius (ft)
	98.4			98.4		98.4		98.4		111.9		111.9		111.9		111.9		125.7		125.7		125.7	
	° ∠			° ∠		° ∠		° ∠		° ∠		° ∠		° ∠		° ∠		° ∠		° ∠		° ∠	
8																							8
9																							9
10																							10
12	82		199.5	82	170.9	82	137.4	82	87.8														12
14	80		199.5	80	170.9	80	131.7	80	83.1														14
16	79		193.7	79	170.9	79	126.5	79	78.7	80	154.3	80	127.9	80	112.4	80	75.0						16
18	78		184.1	78	170.9	78	121.8	78	74.4	80	154.3	80	127.9	80	112.4	80	72.6	81	120.2	81	95.9	81	66.1	18
20	77		174.4	77	170.9	77	117.3	77	70.2	79	153.5	79	127.9	79	112.4	79	70.3	80	120.2	80	95.9	80	65.8	20
25	74		151.7	74	170.9	74	107.8	74	61.3	76	139.1	76	127.9	76	110.1	76	63.4	78	120.2	78	95.9	78	61.5	25
30	71		133.7	71	159.7	71	99.7	71	54.1	74	123.3	74	127.9	74	103.2	74	57.2	76	113.7	76	95.9	76	56.9	30
35	68		119.5	68	134.2	68	93.1	68	48.5	71	110.2	71	126.0	71	96.6	71	51.8	74	103.1	74	95.9	74	52.2	35
40	65		107.7	65	115.0	65	87.2	65	43.8	68	99.4	68	117.2	68	91.1	68	47.4	71	93.3	71	93.8	71	47.3	40
45	61		96.5	61	100.4	61	81.3	61	40.2	65	90.5	65	102.2	65	86.2	65	43.5	68	85.1	68	89.1	68	43.3	45
50	57		85.5	57	88.6	57	75.7	57	37.0	63	83.1	63	90.4	63	80.8	63	40.2	66	78.2	66	84.5	66	39.8	50
55	53		75.7	53	78.8	53	70.7	53	34.2	59	76.1	59	80.6	59	75.8	59	37.3	63	72.2	63	79.5	63	36.8	55
60	49		67.3	49	71.1	49	66.3	49	31.8	56	69.8	56	72.3	56	71.4	56	34.9	61	66.8	61	73.9	61	34.2	60
65	45		59.6	45	67.1	45	62.4	45	29.6	52	65.6	52	65.2	52	67.5	52	32.7	58	62.1	58	67.0	58	31.8	65
70	41		54.7	41	60.4	41	59.2	41	27.8	49	59.0	49	61.1	49	64.1	49	30.8	55	58.1	55	62.5	55	29.8	70
75	36		49.7	36	54.2	36	56.2	36	26.3	45	52.8	45	56.3	45	59.6	45	29.1	52	53.8	52	57.8	52	27.9	75
80	29		44.5	29	48.9	29	53.5	29	24.8	41	47.4	41	50.8	41	54.4	41	27.7	49	49.1	49	52.8	49	26.3	80
85	21		40.0	21	44.4	21	50.7	21	23.7	37	42.8	37	46.1	37	49.7	37	26.3	45	44.4	45	48.1	45	25.0	85
90										32	38.9	32	42.2	32	45.6	32	25.1	42	40.5	42	44.1	42	23.6	90
95										26	35.5	26	38.8	26	42.1	26	24.2	38	37.0	38	40.4	38	22.5	95
100										19	32.3	19	35.6	19	38.9	19	23.3	34	33.9	34	37.2	34	21.5	100
110																		23	28.4	23	32.0	23	19.7	110
120																								120
130																								130
140																								140
150																								150
160																								160
170																								170
180																								180
190																								190
200																								200
210																								210
Telescoping sequence %																								
Tel. 1	92			46		0		0		92		46		0		0		92		46		0		Tel. 1
Tel. 2	46			46		0		0		46		46		46		0		46		46		0		Tel. 2
Tel. 3	46			46		46		0		46		46		46		0		46		46		0		Tel. 3
Tel. 4	0			46		46		0		46		46		46		46		46		46		92		Tel. 4
Tel. 5	0			0		46		92		0		46		46		92		46		46		92		Tel. 5
Tel. 6	0			0		46		92		0		0		46		92		0		46		92		Tel. 6

Counterweight 156,527 lbs

Lifting capacities in 1,000 lbs according per SAE J765 on telescopic boom
On outriggers, 360° working area
Outrigger base 27.23 ft

Working Radius (ft)	Boom length (ft)																				Working Radius (ft)
	139.4		139.4		139.4		139.4		153.2		153.2		153.2		167.0		167.0		167.0		
	∠°		∠°		∠°		∠°		∠°		∠°		∠°		∠°		∠°		∠°		
8																					8
9																					9
10																					10
12																					12
14																					14
16																					16
18																					18
20	82	95.9	82	82.9	82	69.4	82	56.2													20
25	79	95.9	79	82.9	79	69.4	79	56.2	80	76.1	80	55.8	80	47.2							25
30	78	95.0	78	82.9	78	69.3	78	55.1	79	76.1	79	55.6	79	47.2	80	62.8	80	49.8	80	41.7	30
35	76	88.3	76	82.9	76	66.4	76	52.5	77	75.5	77	52.8	77	47.2	78	62.8	78	49.8	78	41.7	35
40	74	82.4	74	82.5	74	62.3	74	49.1	76	71.3	76	50.0	76	47.0	77	62.1	77	49.6	77	41.7	40
45	71	78.4	71	79.1	71	59.6	71	45.3	73	67.0	73	47.8	73	45.3	75	59.6	75	47.6	75	41.7	45
50	69	73.0	69	74.1	69	56.2	69	41.9	72	64.1	72	45.2	72	42.8	74	56.5	74	45.4	74	41.0	50
55	67	67.6	67	68.8	67	52.9	67	39.0	70	61.1	70	42.8	70	40.3	72	53.4	72	43.3	72	39.3	55
60	65	62.7	65	63.8	65	50.0	65	36.4	68	57.6	68	40.6	68	37.9	71	50.4	71	41.3	71	36.8	60
65	62	58.3	62	59.6	62	47.5	62	34.0	66	54.4	66	38.6	66	35.6	68	47.7	68	39.3	68	34.7	65
70	60	54.5	60	55.8	60	45.1	60	32.0	64	51.7	64	36.9	64	33.5	67	45.3	67	37.7	67	32.8	70
75	58	51.1	58	52.4	58	43.0	58	30.1	62	48.9	62	35.2	62	31.7	65	43.1	65	36.2	65	31.0	75
80	55	47.8	55	49.3	55	41.2	55	28.5	59	46.1	59	33.6	59	30.0	63	40.9	63	34.7	63	29.4	80
85	52	44.1	52	46.3	52	39.6	52	27.0	57	43.8	57	32.3	57	28.3	61	38.9	61	33.2	61	27.9	85
90	49	40.2	49	42.4	49	38.0	49	25.6	55	41.4	55	30.9	55	27.0	59	37.2	59	32.0	59	26.5	90
95	46	36.8	46	38.9	46	36.6	46	24.4	52	38.5	52	29.7	52	25.5	57	35.1	57	30.9	57	25.3	95
100	43	33.7	43	35.7	43	35.3	43	23.3	49	35.3	49	28.6	49	24.1	54	32.9	54	29.9	54	24.2	100
110	36	28.2	36	30.3	36	33.0	36	21.4	44	29.9	44	26.7	44	21.7	50	29.2	50	27.9	50	22.0	110
120	27	23.7	27	25.9	27	29.1	27	19.8	38	25.5	38	25.0	38	19.7	45	25.7	45	25.9	45	19.9	120
130									29	21.6	29	23.5	29	17.8	39	21.8	39	23.4	39	18.1	130
140									16	18.4	16	20.3	16	16.5	32	18.6	32	21.2	32	16.5	140
150															23	16.1	23	18.7	23	15.3	150
160																					160
170																					170
180																					180
190																					190
200																					200
210																					210

Telescoping sequence %											
Tel. 1	92	92	46	0	92	46	0	92	92	0	Tel. 1
Tel. 2	92	46	46	0	92	46	0	92	46	46	Tel. 2
Tel. 3	46	46	46	46	46	46	92	92	46	92	Tel. 3
Tel. 4	46	46	46	92	46	46	92	46	46	92	Tel. 4
Tel. 5	46	46	46	92	46	92	92	46	92	92	Tel. 5
Tel. 6	0	46	92	92	46	92	92	46	92	92	Tel. 6

Working Radius (ft)	Lifting capacities in 1,000 lbs according per SAE J765 on telescopic boom On outriggers, 360° working area **Outrigger base 27.23 ft** Boom length (ft)														Working Radius (ft)
	180.4		180.4		180.4		194.2		194.2		208.0		223.1		
	∠°		∠°		∠°		∠°		∠°		∠°		∠°		
8															8
9															9
10															10
12															12
14															14
16															16
18															18
20															20
25															25
30	81	50.7	81	42.3	81	37.3									30
35	79	50.7	79	42.3	79	37.3	80	41.4	80	33.1					35
40	79	50.7	79	42.3	79	37.3	79	41.4	79	33.1	80	33.1	81	27.6	40
45	77	50.3	77	42.3	77	37.3	77	41.4	77	33.1	79	33.1	80	27.6	45
50	76	48.9	76	42.3	76	37.3	76	41.4	76	33.1	78	33.1	79	27.6	50
55	74	46.9	74	41.8	74	37.3	75	41.0	75	33.1	77	33.1	78	27.6	55
60	73	44.6	73	40.6	73	36.9	74	40.0	74	33.1	76	33.1	77	27.6	60
65	71	42.4	71	38.4	71	35.1	72	38.1	72	33.1	74	33.1	75	27.6	65
70	69	40.2	69	36.5	69	33.2	71	36.4	71	32.9	73	32.8	74	27.6	70
75	67	38.2	67	34.7	67	31.5	69	34.8	69	32.0	72	31.9	73	27.6	75
80	66	36.4	66	32.9	66	29.9	68	33.2	68	30.5	71	30.6	72	27.4	80
85	64	34.7	64	31.4	64	28.5	66	31.8	66	29.2	69	29.4	71	26.9	85
90	62	33.2	62	29.9	62	27.2	65	30.5	65	27.8	68	28.2	70	25.6	90
95	60	31.8	60	28.5	60	25.9	63	29.1	63	26.7	66	27.0	68	24.3	95
100	59	30.4	59	27.2	59	24.8	62	27.8	62	25.6	65	25.9	67	23.0	100
110	55	27.9	55	25.0	55	22.8	58	25.7	58	23.5	61	24.1	64	20.8	110
120	50	25.0	50	22.8	50	20.6	54	23.7	54	21.7	58	22.2	61	18.9	120
130	46	22.2	46	20.8	46	18.5	50	21.1	50	20.0	54	20.7	58	17.2	130
140	40	19.2	40	18.8	40	16.8	46	18.9	46	18.1	51	18.4	54	15.7	140
150	34	16.5	34	17.1	34	15.1	41	16.7	41	16.7	46	16.7	51	14.2	150
160	26	14.3	26	15.8	26	13.9	35	14.9	35	15.3	42	15.3	47	13.1	160
170			17	14.4	17	12.6	29	12.9	29	14.0	37	13.8	43	12.0	170
180							19	11.2	19	12.9	31	12.1	39	10.9	180
190											23	10.4	34	9.5	190
200													28	8.6	200
210													18	7.7	210
Telescoping sequence %															
Tel. 1	92		46		0		92		46		92		100		Tel. 1
Tel. 2	92		92		92		92		92		92		100		Tel. 2
Tel. 3	92		92		92		92		92		92		100		Tel. 3
Tel. 4	92		92		92		92		92		92		100		Tel. 4
Tel. 5	46		92		92		92		92		92		100		Tel. 5
Tel. 6	46		46		92		46		92		92		100		Tel. 6

BURT crane & rigging

All Terrain Crane	Liebherr LTM 1250-6.1 (#118)	300 t

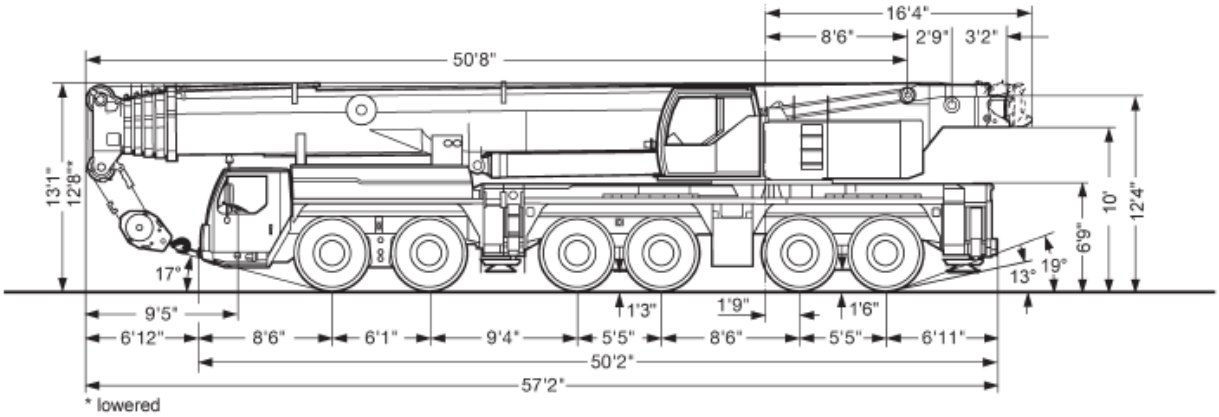

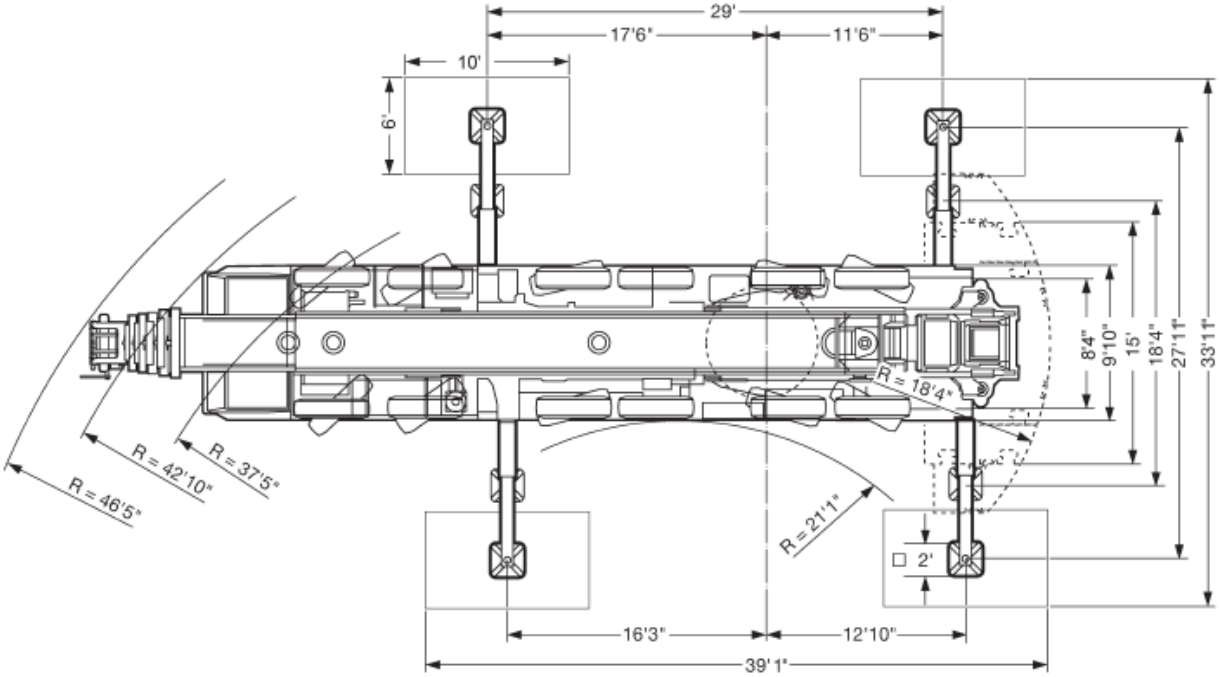

Crane 18, LTM1250-6.1

85%

T --

070955 21.02

ft >< lbs CODE > 0018 < L131 1500 .x(x)

ft	119	119	125	136	136	136	136	136	136	136
9										
10										
12										
14										
16										
18	113,000	91,500	87,500							
21	112,000	90,000	85,500	113,000	130,000	134,000	113,000	108,000	91,500	86,500
24	108,000	86,000	81,000	113,000	129,000	134,000	113,000	106,000	90,000	85,000
27	101,000	80,000	75,500	113,000	125,000	134,000	110,000	100,000	85,000	80,000
30	94,000	74,500	70,500	113,000	118,000	132,000	103,000	95,000	80,500	75,500
33	87,500	70,000	66,000	109,000	111,000	130,000	97,500	90,500	75,500	71,500
36	82,500	66,000	62,500	103,000	105,000	129,000	92,000	86,000	71,000	68,000
39	78,000	62,000	58,900	97,000	99,500	124,000	87,000	82,500	67,000	64,500
45	70,000	55,800	52,800	86,500	89,000	113,000	78,500	75,500	60,500	58,700
51	62,500	50,100	47,400	77,500	80,000	104,000	71,000	69,500	54,800	53,600
57	56,900	45,600	43,200	69,500	72,000	96,000	64,000	64,500	49,500	49,100
63	52,100	41,800	39,700	63,000	65,000	89,000	58,700	60,000	45,300	45,400
69	47,700	38,300	36,500	57,400	59,700	82,500	54,200	56,300	41,700	42,300
75	44,100	35,400	33,500	52,400	54,600	76,500	50,000	53,000	38,500	39,400
81	41,200	33,100	31,000	47,800	50,000	71,000	46,200	49,800	35,500	36,700
87	38,500	31,000	29,100	43,700	45,900	65,000	42,800	47,100	32,900	34,300
93	36,000	29,000	27,400	40,600	42,800	59,400	40,300	45,100	30,900	32,400
99	33,700	27,200	25,700	37,800	40,000	54,300	37,900	43,200	29,100	30,600
105			24,100	35,100	37,300	49,900	35,700	41,500	27,400	29,000
111			22,600	32,500	34,700	45,900	33,700	39,800	25,800	27,400
117				30,100	32,400	40,700	31,700	38,300	24,200	25,900
123				27,300	29,100	34,100	29,800	36,200	22,700	24,500
129										
135										
141										
147										
153										
159										
165										
171										
177										
* n *	5	4	4	5	6	6	5	5	4	4
% 1	0+	0+	0+	92+	92+	46+	0+	0+	0+	0+
% 2	0+	0+	0+	92+	46+	46+	92+	46+	0+	0+
% 3	92+	0+	0+	46+	46+	46+	46+	46+	92+	46+
% 4	46+	92+	100+	0+	46+	46+	46+	46+	92+	92+
% 5	46+	92+	100+	0+	0+	46+	46+	92+	46+	92+
ft /s	28	28	28	28	28	28	28	28	28	28
TAB ***	351	351	351	351	351	351	351	351	351	351

T --

215,000 lbs

29 x 27 ft

360°