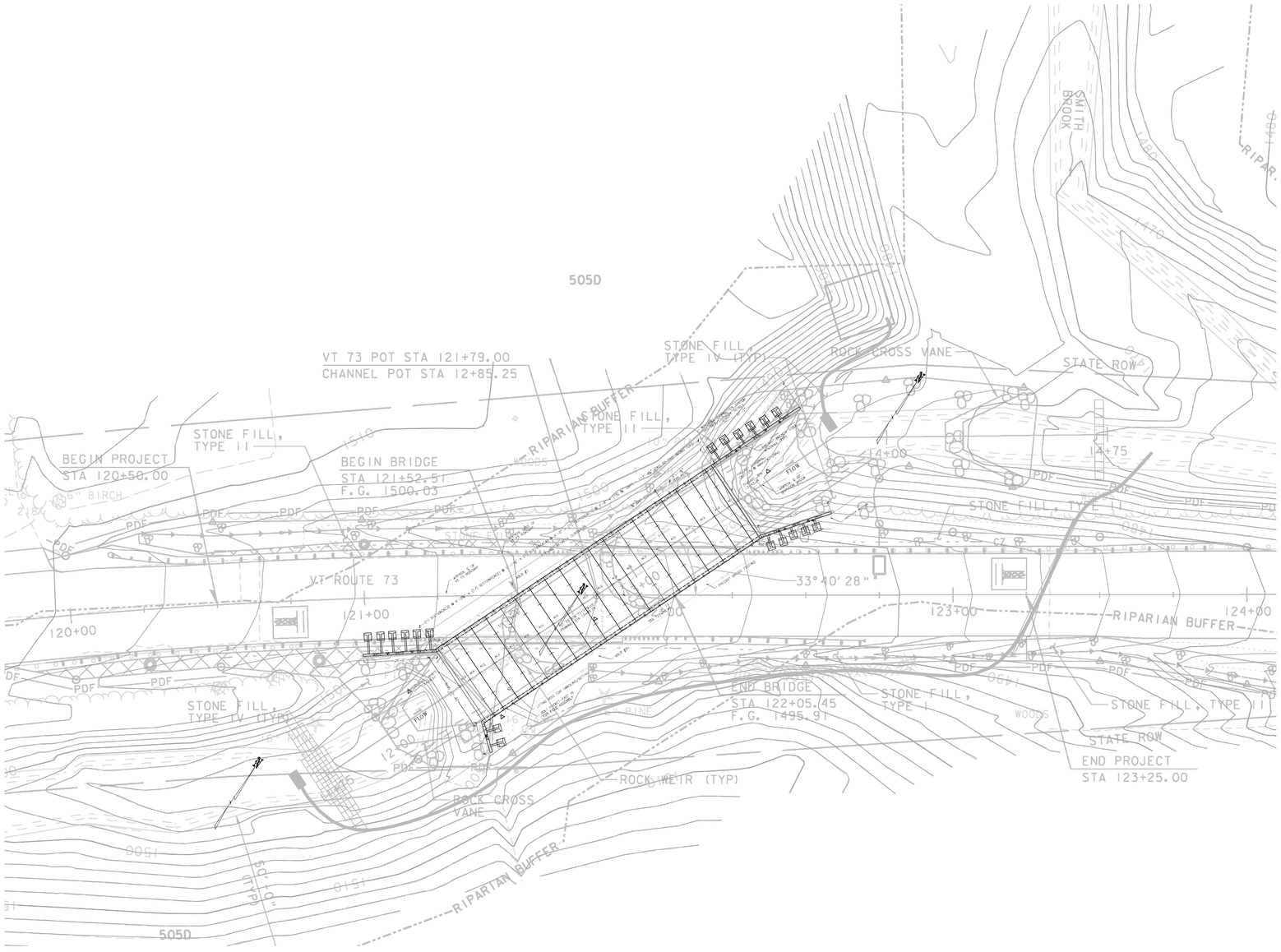

PLAN VIEW
1" = 20'

Precast Unit Installation:

1. Methods, Equipment and Erection. Equipment, lifting devices, and other equipment for precast concrete structure erection shall be of adequate design and capacity to safely erect, align, and secure all members and components in their final positions without damage.
2. Lifting devices as provided and/or cast into the precast concrete segments by the precast supplier are to be used for handling the precast units.
3. The Contractor shall follow the erection plan as submitted.

General Notes

General:

1. Existing conditions are taken from Contract Drawings.
2. All dimensions relative to existing elements are to be field checked prior to fabrication and installation of proposed elements.
3. Control datums are those from the Contract Documents.
4. Design is based on conditions shown in the Contract Documents. Should conditions encountered in the field vary from those indicated conditions, the design may be invalid and revisions should be investigated.

September 8, 2014

No.	Revision/Issue	Date
1	add Volvo excavator	140910

Firm Name and Address
TAW Associates
Waterville Valley, NH
603-236-4247 www.TAWAssociates.net

Proposed Improvement Bridge Project Bridge No. 13, 15, 16 & 19 - Rochester, VT Vtrans ER BRF 0162(19), (16), (17) & (18)

Project Name and Address
Partial Erection Bridge 13

GENERAL PLAN

Project 140404A
Date September 8, 2014
Scale noted
Sheet ER01

SCHULTZ CONSTRUCTION, INC.

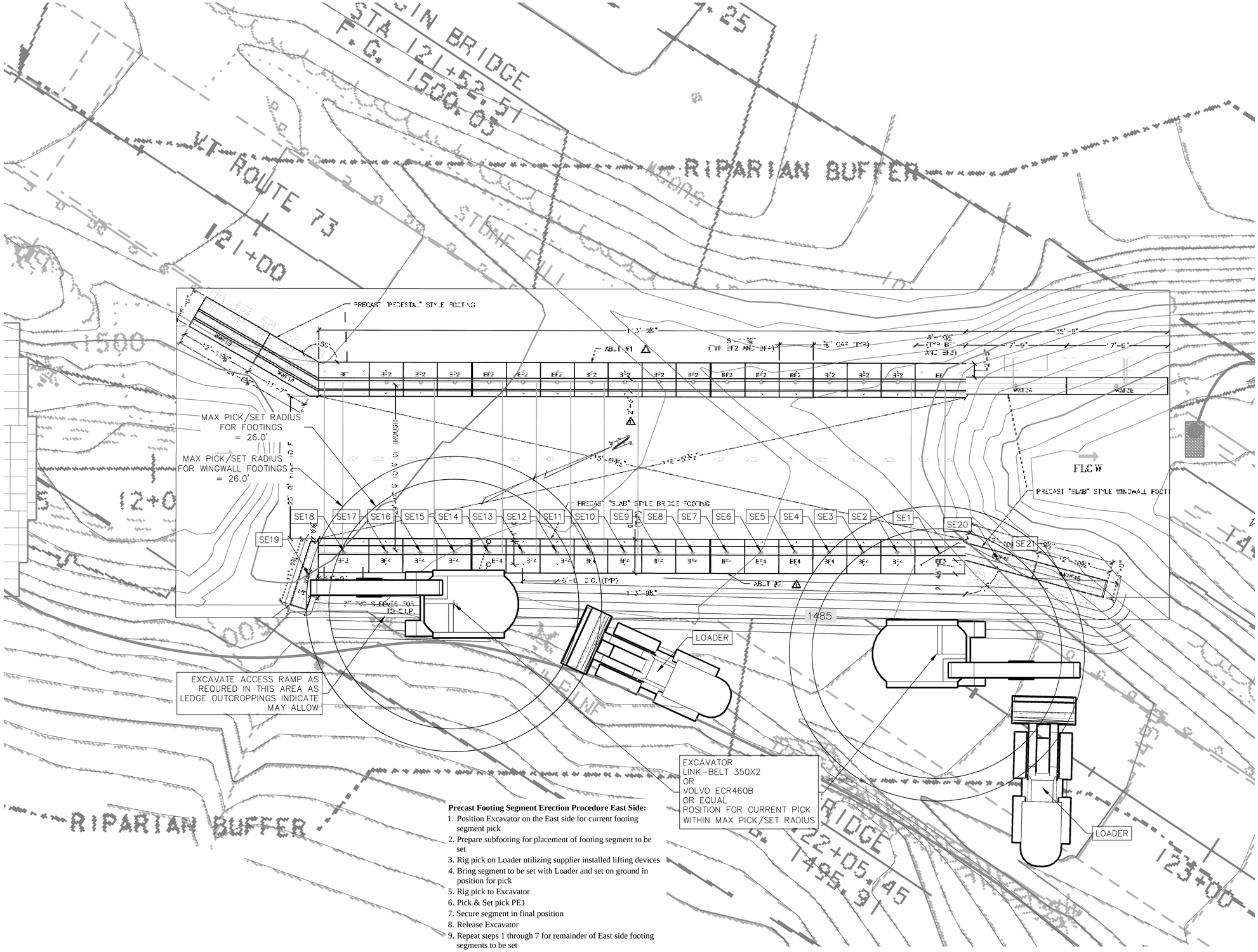

Precast Footing Segment Erection Procedure East Side:

1. Position Excavator on the East side for current footing segment pick
2. Prepare subfooting for placement of footing segment to be set
3. Rig pick on Loader utilizing supplier installed lifting devices
4. Bring segment to be set with Loader and set on ground in position for pick
5. Rig pick to Excavator
6. Pick & Set pick PE1
7. Secure segment in final position
8. Release Excavator
9. Repeat steps 1 through 7 for remainder of East side footing segments to be set

PLAN VIEW

$\frac{1}{8}$" = 1'

General Notes

STATE OF VERMONT
TERRY WAITE
LICENSED PROFESSIONAL ENGINEER

September 8, 2014

No.	Revision/Issue	Date
1	add Volvo excavator	140910

Firm Name and Address

TAW Associates
Waterville Valley, NH
603-236-4247 www.TAWAssociates.net

Proposed Improvement Bridge Project Bridge No. 13, 15, 16 & 19 - Rochester, VT Vtrans ER BRF 0162(19), (16), (17) & (18)

Project Name and Address

Partial Erection Bridge 13

EXCAVATOR LIFT PLAN FOOTINGS

Project 140404A	Sheet ER02
Date September 8, 2014	
Scale noted	

SCHULTZ CONSTRUCTION, INC.

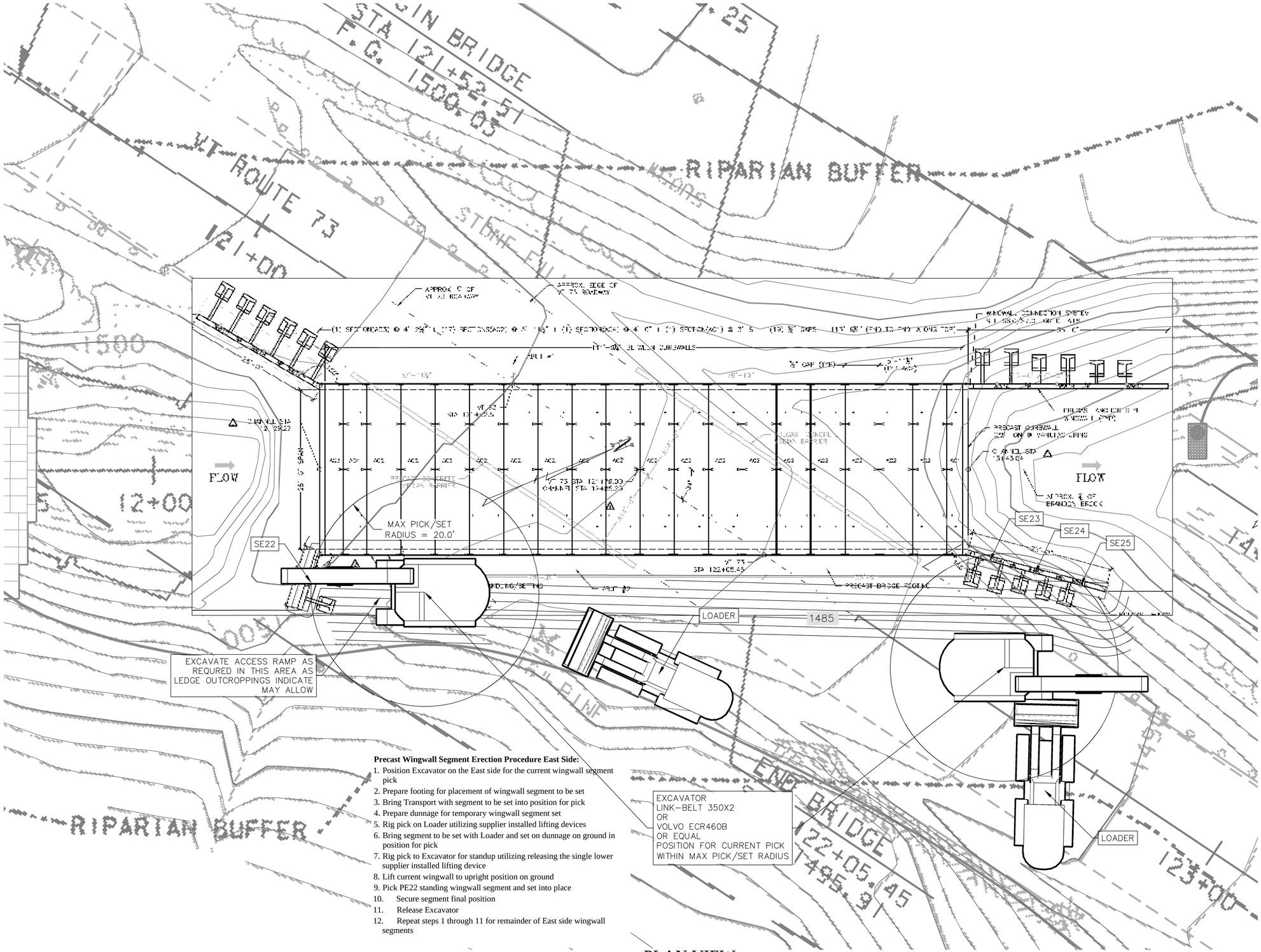

Precast Wingwall Segment Erection Procedure East Side:

1. Position Excavator on the East side for the current wingwall segment pick
2. Prepare footing for placement of wingwall segment to be set
3. Bring Transport with segment to be set into position for pick
4. Prepare dunnage for temporary wingwall segment set
5. Rig pick on Loader utilizing supplier installed lifting devices
6. Bring segment to be set with Loader and set on dunnage on ground in position for pick
7. Rig pick to Excavator for standup utilizing releasing the single lower supplier installed lifting device
8. Lift current wingwall to upright position on ground
9. Pick PE22 standing wingwall segment and set into place
10. Secure segment final position
11. Release Excavator
12. Repeat steps 1 through 11 for remainder of East side wingwall segments

PLAN VIEW

$\frac{1}{8}$" = 1'

General Notes

STATE OF VERMONT
TERRY WATTS
LICENSED PROFESSIONAL ENGINEER

September 8, 2014

No.	Revision/Issue	Date
1	add Volvo excavator	140910

Firm Name and Address

TAW Associates
Waterville Valley, NH
603-236-4247 www.TAWAssociates.net

Proposed Improvement Bridge Project Bridge No. 13, 15, 16 & 19 - Rochester, VT Vtrans ER BRF 0162(19), (16), (17) & (18)

Project Name and Address

Partial Erection
Bridge 13

EXCAVATOR LIFT
PLAN
WINGWALLS

Project 140404A	Sheet ER03
Date September 8, 2014	
Scale noted	

SCHULTZ CONSTRUCTION, INC.

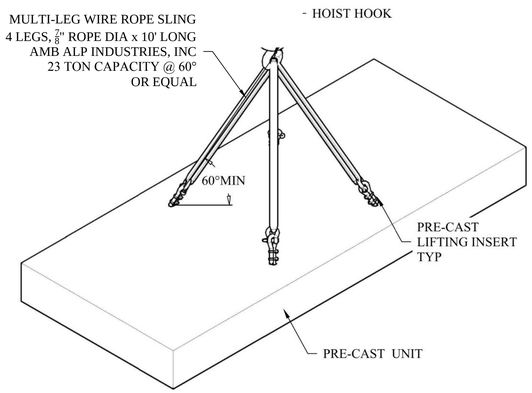

4 LUG FOOTING SEGMENT RIGGING
NTS

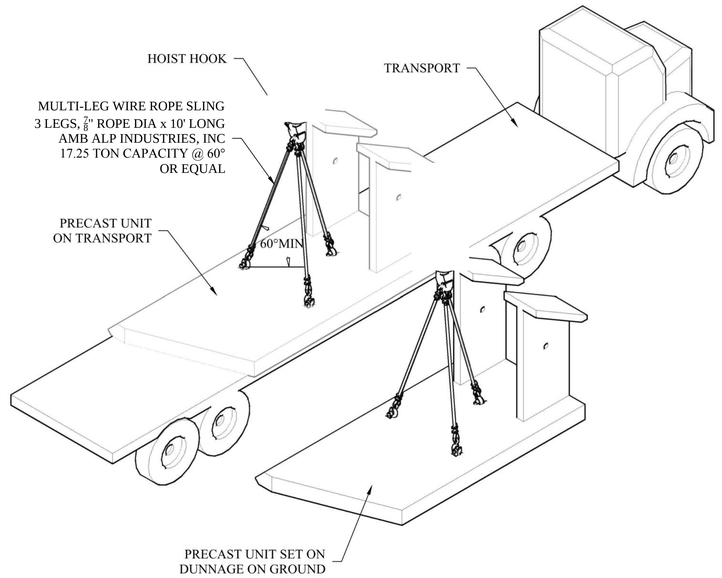

WINGWALL SEGMENT RIGGING FOR UNLOADING
NTS

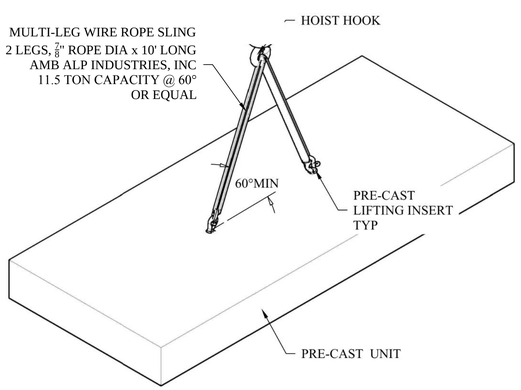

2 LUG FOOTING SEGMENT RIGGING
NTS

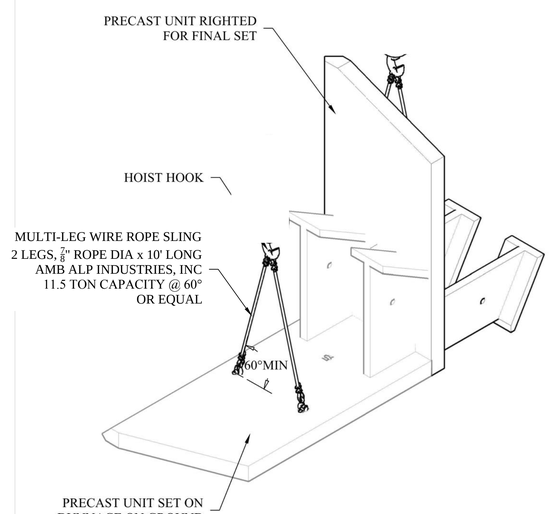

WINGWALL SEGMENT RIGGING FOR RIGHTING & SETTING
NTS

General Notes

Rigging:

1. Maintain minimum 60° sling angle when handling precast components

September 8, 2014

No.	Revision/Issue	Date
1	add Volvo excavator	140910

Firm Name and Address
TAW Associates
Waterville Valley, NH
603-236-4247 www.TAWAssociates.net

Proposed Improvement Bridge Project Bridge No. 13, 15, 16 & 19 - Rochester, VT Vtrans ER BRF 0162(19), (16), (17) & (18)

Project Name and Address
Partial Erection Bridge 13

RIGGING DETAILS

Project 140404A
Date September 8, 2014
Scale noted
Sheet ER04

SCHULTZ CONSTRUCTION, INC.

DOCUMENT: 140404B REV01

Bridge 13 Erection Plan
For Excavator Lifts

-

For The Project:
Proposed Improvement Bridge Project Bridge No. 13, 15, 16 & 19 – Rochester, VT
Vtrans ER BRF 0162(19), (16), (17) & (18)

-

for

SCHULTZ CONSTRUCTION, INC.

by

TAW ASSOCIATES

September 10, 2014

TABLE OF CONTENTS

TABLE OF CONTENTS ***2***

SCOPE ***3***

EXISTING CONDITIONS ***3***

PROCEDURE ***3***

Precast Unit Installation: **3**

Precast Footing Segment Erection Procedure East Side: **3**

Precast Wingwall Segment Erection Procedure East Side: **3**

Rigging: **4**

SUPPORTING COMPUTATIONS: ***5***

LOADING: **5**

Pick Weights, East Side : **6**

Insert Check: **6**

RIGGING: **7**

Multi-leg Wire Rope Sling, 4 legs amb ALP Industries: 7

Rigging Weights: 8

Excavator Lift Capacity Check: **9**

East Side Picks: 10

Link-Belt 350X2; 10

Volvo ECR460B; 15

EQUIPMENT ***20***

EXCAVATOR, Link-Belt 350X2: **21**

EXCAVATOR, Volvo ECR460B: **25**

SCOPE

Provide plan for the erection of certain precast concrete segments of Bridge 13 for the Project using an Excavator for lifts. The balance of the segments are to be lifted into position using a crane in conformance with a separate plan.

EXISTING CONDITIONS

Existing conditions as used in this design are those taken from Contract Documents.

PROCEDURE

This document is supplemented by drawings of the same number. Refer to drawings for details.

See Equipment Section for equipment information.

Precast Unit Installation:

1. Methods, Equipment and Erection. Equipment, lifting devices, and other equipment for precast concrete structure erection shall be of adequate design and capacity to safely erect, align, and secure all members and components in their final positions without damage.
2. Lifting devices as provided and/or cast into the precast concrete segments by the precast supplier are to be used for handling the precast units.
3. The Contractor shall follow the erection plan as submitted.

Precast Footing Segment Erection Procedure East Side:

1. Position Excavator on the East side for current footing segment pick
2. Prepare subfooting for placement of footing segment to be set
3. Rig pick on Loader utilizing supplier installed lifting devices
4. Bring segment to be set with Loader and set on ground in position for pick
5. Rig pick to Excavator
6. Pick & Set pick PE1
7. Secure segment in final position
8. Release Excavator
9. Repeat steps 1 through 7 for remainder of East side footing segments to be set

Precast Wingwall Segment Erection Procedure East Side:

1. Position Excavator on the East side for the current wingwall segment pick
2. Prepare footing for placement of wingwall segment to be set
3. Bring Transport with segment to be set into position for pick
4. Prepare dunnage for temporary wingwall segment set

5. Rig pick on Loader utilizing supplier installed lifting devices
6. Bring segment to be set with Loader and set on dunnage on ground in position for pick
7. Rig pick to Excavator for standup utilizing releasing the single lower supplier installed lifting device
8. Lift current wingwall to upright position on ground
9. Pick PE22 standing wingwall segment and set into place
10. Secure segment final position
11. Release Excavator
12. Repeat steps 1 through 11 for remainder of East side wingwall segments

Rigging:

1. Maintain minimum 60° sling angle when handling precast components

SUPPORTING COMPUTATIONS:

LOADING:

The precast segment weights as provided by the supplier are:

Qty	Unit	Product Description	Weight	Unit
		***EAST* Side (Rochester) - Precast Concrete Materials**		
		Bridge Footings		
2	ea	Bridge Footing - BF-3	15,330 lbs	ea
16	ea	Bridge Footing - BF-4	10,330 lbs	ea
		Wingwall Footings		
1	ea	Wingwall Footing - WWF-2	9,410 lbs	ea
1	ea	Wingwall Footing - WWF-4A	11,180 lbs	ea
1	ea	Wingwall Footing - WWF-4B	11,550 lbs	ea
		Wingwall Panels		
1	ea	Wingwall Panel - WW-2 - 11'-2" W x 11'-9" H	20,290 lbs	ea
1	ea	Wingwall Panel - WW-4A - 8'-4" W x 9'-4" H	10,840 lbs	ea
1	ea	Wingwall Panel - WW-4B - 8'-4" W x 7'-0-1/2" H	7,940 lbs	ea
1	ea	Wingwall Panel - WW-4C - 8'-4" W x 4'-5-1/4" H	5,120 lbs	ea

Pick Weights, East Side :

PICK #	SET #	MEMBER I.D.	PICK WEIGHT lbs	LIFT POINTS ea	LIFT PER POINT lbs	RIGGING WEIGHT lbs	TOTAL LIFT lbs	TOTAL LIFT kg
PE1	SE1	BF3	15,330	4	3,833	245	15,575	7,065
PE2	SE2	BF4	10,330	4	2,583	245	10,575	4,797
PE3	SE3	BF4	10,330	4	2,583	245	10,575	4,797
PE4	SE4	BF4	10,330	4	2,583	245	10,575	4,797
PE5	SE5	BF4	10,330	4	2,583	245	10,575	4,797
PE6	SE6	BF4	10,330	4	2,583	245	10,575	4,797
PE7	SE7	BF4	10,330	4	2,583	245	10,575	4,797
PE8	SE8	BF4	10,330	4	2,583	245	10,575	4,797
PE9	SE9	BF4	10,330	4	2,583	245	10,575	4,797
PE10	SE10	BF4	10,330	4	2,583	245	10,575	4,797
PE11	SE11	BF4	10,330	4	2,583	245	10,575	4,797
PE12	SE12	BF4	10,330	4	2,583	245	10,575	4,797
PE13	SE13	BF4	10,330	4	2,583	245	10,575	4,797
PE14	SE14	BF4	10,330	4	2,583	245	10,575	4,797
PE15	SE15	BF4	10,330	4	2,583	245	10,575	4,797
PE16	SE16	BF4	10,330	4	2,583	245	10,575	4,797
PE17	SE17	BF4	10,330	4	2,583	245	10,575	4,797
PE18	SE18	BF3	15,330	4	3,833	245	15,575	7,065
PE19	SE19	WWF2	9,410	4	2,353	245	9,655	4,379
PE20	SE20	WWF4A	11,180	2	5,590	245	11,425	5,182
PE21	SE21	WWF4B	11,550	2	5,775	245	11,795	5,350
PE22	SE22	WW2	20,290	2	10,145	245	20,535	9,315
PE23	SE23	WW4A	10,840	2	5,420	245	11,085	5,028
PE24	SE24	WW4B	7,940	2	3,970	245	8,185	3,713
PE25	SE25	WW4C	5,120	2	2,560	245	5,365	2,434

Designing rigging for the heaviest pick per sling leg,

$$\mathbf{P_{riggingdesign} = 10{,}145 lbs/sling\ leg}$$

Insert Check:

$$\mathbf{P_{insert\ allowable} = 5ton = 10{,}000 lbs\ \ aprox\ \ 10{,}145 lbs\ \ OK}$$

RIGGING:

Multi-leg Wire Rope Sling, 4 legs amb ALP Industries:

$P_{riggingdesign}$ = 10,145 lbs/leg

24 SECTION I - WIRE ROPE

ALP INDUSTRIES INC

Multi-leg wire rope Slings

TYPE 404

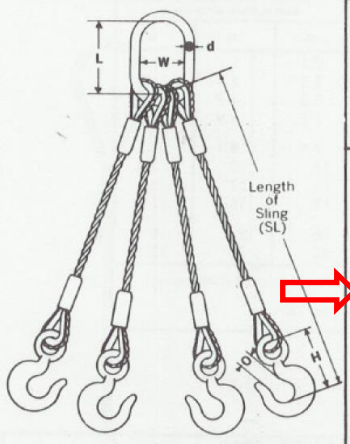

4-leg Bridle Sling

Rated Capacities in Tons (2000 lb) Purple Rope—IWRC									
Diam of Rope in.	Min Length (SL) of Sling ft—in.	Rated Capacities in Tons When Used		Alloy Oblong Links			Hooks		
		30°	45°	d in.	W in.	L in.	Size No.	O in.	H in.
¼	1—3	1.9	1.6	⅝	3	6	22	1	3¼
⅜	1—8	4.2	3.4	1	4	8	24	1⅛	3 31/32
½	2—0	7.6	6.2	1½	6	12	26	1 13/32	4 15/16
⅝	2—4	12	9.6	1½	6	12	28	1 25/32	6 3/16
¾	2—9	17	14	2	7	14	29	1 15/16	6⅞
⅞	3—3	23	19	2	7	14	31	2 5/16	8⅜
1	3—6	29	24	2¼	8	16	32	2 9/16	9 5/16
1⅛	4—0	35	28	2¾	9	16	33	3 1/16	10⅝
1¼	4—6	45	37	2¾	9	16	34	3 7/16	12 1/16
1⅜	5—0	52	42	4	14	22	35	4	14
1½	5—6	62	51	4	14	22	36	4 7/16	15⅞
1¾	6—6	87	71	4	14	22	37A	4¼	18 3/16
2	8—0	110	90	4¾	16	24	40C	5¾	23 13/16

Sling Capacity = 23 tons = 46,000 lbs
Sling Leg Capacity = Sling Capacity / No. of Legs = 11,500 lbs/leg < 10,145 lbs/leg OK

Rigging Weights:

For purposes of estimating rigging weight,

Domestic - Wire Rope Sling - Four Leg with Hooks

Type: Wire rope sling with four single rope legs, Oblong link, Eye-hoist latched hooks and flemished loops.

Country of Origin: USA

Application: This wire rope sling is utilized for general purpose overhead lifting using bridle hitch arrangement with quadruple pick points.

Description: Four leg bridle wire rope sling includes four single part rope legs. Eyes with thimbles are formed at each leg end by mechanical splicing. The assembly incorporates an oblong master link and leg-end standard latched sling hooks. The bridle hitch provides excellent load stability when the load is distributed equally among the wire rope legs, the hoisting point is directly over the center of gravity of the load, and the load is raised while level. The use of

▼ Read More

Learn More: Things you need to know be

Model	@ 45° (tons)	@ 60° (tons)	Rope Diameter (in)	Rope Length (ft)	Weight (lbs)
WR53-04	28	34	1	4	201
WR53-06	28	34	1	6	216
WR53-08	28	34	1	8	231
WR53-10	28	34	1	10	245
WR53-12	28	34	1	12	260
WR53-15	28	34	1	15	282

Rigging Weight:

Component	quantity	Length ft	Unit Wgt lbs		Weight lbs
spreader cables/chains/nylon slings	1	10	24.50	plf	245

Rigging Weight = **245** lbs

Excavator Lift Capacity Check:

Segments will be lifted using excavators and multileg sling rigging. Lifting heights will be,

Pick:				
grade differential	4	ft		
dunnage	1	ft		
segment height	2	ft		
rigging height	8	ft		
total	15	ft	4.572	m
Set:				
grade differential	-5	ft		
segment height	2	ft		
rigging height	8	ft		
total	5	ft	1.524	m

The table below checks Excavator Lift Capacity accounting for payload weight plus rigging weight. Pick radii, distances from pin to pick/set point, are measured in a horizontal plane.

East Side Picks:

$P_{max\ ftg}$ = **15,575lbs**
$P_{max\ wwftg}$ = **11,795lbs**
$P_{max\ ww}$ = **20,535lbs**

Link-Belt 350X2;

350 X2 Specifications

Lifting Capacities

10´ 8˝ (3.25 m) Arm with 21´ 2˝ (6.45 m) Boom and 2,577 lb. (1 169 kg) Bucket with Power-Boost Applied

		Radius of Load													
		10´ 0˝ (3.05 m)		15´ 0˝ (4.57 m)		20´ 0˝ (6.10 m)		25´ 0˝ (7.62 m)		30´ 0˝ (9.14 m)		35´ 0˝ (10.67 m)		Cap. at Max. Reach	
		End	Side	End	Side	End	Side	End	Side	End	Side	End	Side	End	Side
+30´ 0˝	lbs													9,250*	9,250*
9.14 m	(kg)													4 196*	4 196*
+25´ 0˝	lbs													8,650*	8,650*
7.62 m	(kg)													3 924*	3 924*
+20´ 0˝	lbs							16,150*	15,350					8,450*	8,450*
6.10 m	(kg)							7 326*	6 963					3 833*	3 833*
+15´ 0˝	lbs					19,700*	19,700*	17,450*	14,850	15,950*	10,650			8,500*	8,100
4.57 m	(kg)					8 936*	8 936*	7 915*	6 736	7 235*	4 831			3 856*	3 674
+10´ 0˝	lbs	48,800*	48,800*	31,300*	31,300*	23,150*	20,250	19,300*	14,100	16,450	10,300			8,800*	7,600
3.05 m	(kg)	22 136*	22 136*	14 198*	14 198*	10 501*	9 185	8 754*	6 396	7 462	4 672			3 992*	3 447
+5´ 0˝	lbs	18,950*	18,950*	38,800*	29,100	26,700*	18,900	21,100*	13,400	16,050	9,900			9,400*	7,500
1.52 m	(kg)	8 596*	8 596*	17 600*	13 200	12 111*	8 573	9 571*	6 078	7 280	4 491			4 264*	3 402
Ground	lbs	25,100*	25,100*	41,000*	27,550	29,100*	17,900	20,900	12,800	15,700	9,600			10,300*	7,750
Line	(kg)	11 385*	11 385*	18 598*	12 497	13 200*	8 119	9 480	5 806	7 122	4 355			4 672*	3 515
-5´ 0˝	lbs	32,400*	32,400*	40,750*	27,150	29,200	17,400	20,500	12,450	15,500	9,400			11,750*	8,550
-1.52 m	(kg)	14 697*	14 697*	18 484*	12 315	13 245	7 893	9 299	5 647	7 031	4 264			5 330*	3 878
-10´ 0˝	lbs	45,550*	45,550*	38,750*	27,350	28,700*	17,350	20,450	12,350					14,250*	10,150
3.05 m	(kg)	20 661*	20 661*	17 577*	12 406	13 018*	7 870	9 276	5 602					6 464*	4 604
-15´ 0˝	lbs	47,600*	47,600*	34,050*	27,850	25,400*	17,650	18,500*	12,700					13,800*	13,800
4.57 m	(kg)	21 591*	21 591*	15 445*	12 633	11 521*	8 006	8 392*	5 761					6 260*	6 260
-20´ 0˝	lbs	33,750*	33,750*	24,800*	24,800*	16,900*	16,900*								
6.10 m	(kg)	15 309*	15 309*	11 249*	11 249*	7 666*	7 666*								

Footing Picks: R_{max} *= 22.0'*

$P_{max\ ftg}$ = **15,575lbs**

Excavator:		Link-Belt 350X2		
Lift Capacity Interpolation:		lbs, over front	PICK	PEmax
		short radius	*design radius*	long radius
	ft	20.00	*22.00*	25.00
high height	20.0	-		16,150
design height	*15.0*	*19,700*	*18,800*	17,450
low height	15.0	19,700		17,450

pick capacity = 18,800 lbs > 15,575 OK

Lift Capacity Interpolation:	lbs, over side	PICK PEmax

		short radius		*design radius*	long radius
	ft	20.00		*22.00*	25.00
high height	20.0	-			15,350
design height	*15.0*	*19,700*		*17,760*	14,850
low height	15.0	19,700			14,850
pick capacity =	**17,760**	**lbs**	**>**	**15,575**	**OK**

Excavator:		Link-Belt 350X2			
Lift Capacity Interpolation:		lbs, over front		SET	SEmax
		short radius		*design radius*	long radius
	ft	20.00		*22.00*	25.00
high height	5.0	26,700			21,100
design height	*4.5*	*26,940*		*24,596*	21,080
low height	0.0	29,100			20,900
pick capacity =	**24,596**	**lbs**	**>**	**15,575**	**OK**

Lift Capacity Interpolation:		lbs, over side		SET	SEmax
		short radius		*design radius*	long radius
	ft	20.00		*22.00*	25.00
high height	5.0	18,900			13,400
design height	*4.5*	*18,800*		*16,616*	13,340
low height	0.0	17,900			12,800
pick capacity =	**16,616**	**lbs**	**>**	**15,575**	**OK**

Wingwall Footing Picks: $R_{max} = 26.0'$

$\mathbf{P_{max\ wwftg} = 11{,}795 lbs}$

Excavator:		Link-Belt 350X2			
Lift Capacity Interpolation:		lbs, over front		PICK	PEmax
		short radius		*design radius*	long radius

	ft	20.00	*26.00*	25.00
high height	20.0	-		16,150
design height	*15.0*	*19,700*	*17,000*	17,450
low height	15.0	19,700		17,450

pick capacity = 17,000 lbs > 11,795 OK

Lift Capacity Interpolation:	lbs, over side		PICK	PEmax
		short radius	*design radius*	long radius
	ft	20.00	*26.00*	25.00
high height	20.0	-		15,350
design height	*15.0*	*19,700*	*13,880*	14,850
low height	15.0	19,700		14,850

pick capacity = 13,880 lbs > 11,795 OK

Excavator: Link-Belt 350X2

Lift Capacity Interpolation:	lbs, over front		SET	SEmax
		short radius	*design radius*	long radius
	ft	20.00	*26.00*	25.00
high height	5.0	26,700		21,100
design height	*4.5*	*26,940*	*19,908*	21,080
low height	0.0	29,100		20,900

pick capacity = 19,908 lbs > 11,795 OK

Lift Capacity Interpolation:	lbs, over side		SET	SEmax
		short radius	*design radius*	long radius
	ft	20.00	*26.00*	25.00
high height	5.0	18,900		13,400
design height	*4.5*	*18,800*	*12,248*	13,340
low height	0.0	17,900		12,800

pick lbs > OK

capacity =	**12,248**		**11,795**	

Wingwall Picks: R_{max} = 20.0'

$P_{max\ ww}$ = 20,535lbs

Excavator:		Link-Belt 350X2		
Lift Capacity Interpolation:		lbs, over front	PICK	PEmax
		short radius	*design radius*	long radius
	ft	15.00	*20.00*	20.00
high height	10.0	31,300		23,150
design height	*10.0*	*31,300*	*23,150*	23,150
low height	5.0	38,800		26,700
pick capacity =	**23,150**	**lbs**	**> 20,535**	**OK**

Lift Capacity Interpolation:		lbs, over side	PICK	PEmax
		short radius	*design radius*	long radius
	ft	15.00	*20.00*	20.00
high height	10.0	31,300		20,250
design height	*10.0*	*31,300*	*20,250*	20,250
low height	5.0	29,100		18,900
pick capacity =	**20,250**	**lbs**	**< 20,535**	**NG! close**

Excavator:		Link-Belt 350X2		
Lift Capacity Interpolation:		lbs, over front	SET	SEmax
		short radius	*design radius*	long radius
	ft	20.00	*20.00*	25.00
high height	5.0	38,800		26,700
design height	*4.5*	*39,020*	*39,020*	26,940
low height	0.0	41,000		29,100
pick capacity =	**39,020**	**lbs**	**> 20,535**	**OK**

Lift Capacity Interpolation:		lbs, over side		SET	SEmax
		short radius		*design radius*	long radius
	ft	20.00		*20.00*	25.00
high height	5.0	29,100			18,900
design height	*4.5*	*28,945*		*28,945*	18,800
low height	0.0	27,550			17,900
pick capacity =	**28,945**	**lbs**	**>**	**20,535**	**OK**

Pick must be made at no more than a 10’ height.

Volvo ECR460B;

• EC460B LC prime with fixed undercarriage

Across undercarriage / Along undercarriage	Lifting hook related to ground level		3.0 m		4.5 m		6.0 m		7.5 m		9.0 m		Max. reach		
															Max. mm
ME boom 6.5 m + Arm 2.55 m + Shoe 600 mm + Counterweight 8,700 kg	6.0 m	kg					*12,860	*12,860	*11,840	9,880			*11,050	8,620	8,140
	4.5 m	kg			*19,240	*19,240	*14,670	13,450	*12,580	9,630			*11,060	7,650	8,680
	3.0 m	kg			*22,060	19,330	*16,720	12,820	*13,590	9,310			11,340	7,170	8,940
	1.5 m	kg			*15,740	*15,740	*18,290	12,340	*14,460	9,040			11,210	7,060	8,940
	0 m	kg			*23,190	18,500	*18,930	12,090	14,390	8,880			11,640	7,300	8,680
	-1.5 m	kg	*16,930	*16,930	*24,370	18,570	*18,520	12,050	14,380	8,860			12,810	7,990	8,130
	-3.0 m	kg	*28,150	*28,150	*21,790	18,830	*16,760	12,210					*13,030	9,510	7,230
	-4.5 m	kg			*16,830	*16,830							*12,390	*12,390	5,810

Footing Picks: R_{max} *= 22.0' (6.71m)*

$P_{max\ ftg}$ = 15,575lbs (7,065kg)

Excavator: Volvo ECR460B
Lift Capacity Interpolation: lbs, over front

		short radius	PICK *design radius*	PEmax long radius
	meters	6.00	*6.71*	7.50
high height	6.0	12,860		11,840
design height	*4.6*	*14,586*	*13,620*	12,545
low height	4.5	14,670		12,580

pick capacity = 13,620 kg > 7,065 OK

Lift Capacity Interpolation: lbs, over side

		short radius	PICK *design radius*	PEmax long radius
	meters	6.00	*6.71*	7.50
high height	6.0	12,860		9,880
design height	*4.6*	*13,422*	*11,633*	9,642
low height	4.5	13,450		9,630

pick capacity = 11,633 kg > 7,065 OK

Excavator: Volvo ECR460B
Lift Capacity Interpolation: lbs, over front

				SET	SEmax
				design	long
		short radius		*radius*	radius
	meters	6.00		*6.71*	7.50
high height	3.0	16,720			13,590
design height	*1.5*	*18,265*		*16,457*	14,446
low height	1.5	18,290			14,460
pick capacity =	**16,457**	**kg**	**>**	**7,065**	**OK**

Lift Capacity Interpolation: lbs, over side

				SET	SEmax
				design	long
		short radius		*radius*	radius
	meters	6.00		*6.71*	7.50
high height	3.0	12,820			9,310
design height	*1.5*	*12,348*		*10,784*	9,044
low height	1.5	12,340			9,040
pick capacity =	**10,784**	**kg**	**>**	**7,065**	**OK**

Wingwall Footing Picks: R_{max} = 26.0' (7.92m)

$P_{max\ wwftg}$ = 11,795lbs (5,350kg)

Excavator: Volvo ECR460B
Lift Capacity Interpolation: lbs, over front

				PICK	PEmax
				design	long
		short radius		*radius*	radius
	meters	6.00		*7.92*	7.50
high height	6.0	12,860			11,840
design height	*4.6*	*14,586*		*11,974*	12,545
low height	4.5	14,670			12,580
pick capacity =	**11,974**	**kg**	**>**	**5,350**	**OK**

Lift Capacity Interpolation:		lbs, over side		PICK	PEmax
		short radius		*design radius*	long radius
	meters	6.00		*7.92*	7.50
high height	6.0	12,860			9,880
design height	*4.6*	*13,422*		*8,583*	9,642
low height	4.5	13,450			9,630
pick capacity =	**8,583**	**kg**	**>**	**5,350**	**OK**

Excavator:		Volvo ECR460B			
Lift Capacity Interpolation:		lbs, over front		SET	SEmax
		short radius		*design radius*	long radius
	meters	6.00		*7.92*	7.50
high height	3.0	16,720			13,590
design height	*1.5*	*18,265*		*13,377*	14,446
low height	1.5	18,290			14,460
pick capacity =	**13,377**	**kg**	**>**	**5,350**	**OK**

Lift Capacity Interpolation:		lbs, over side		SET	SEmax
		short radius		*design radius*	long radius
	meters	6.00		*7.92*	7.50
high height	3.0	12,820			9,310
design height	*1.5*	*12,348*		*8,119*	9,044
low height	1.5	12,340			9,040
pick capacity =	**8,119**	**kg**	**>**	**5,350**	**OK**

Wingwall Picks: R_{max} *= 20.0' (6.10m)*

$P_{max\ ww}$ = 20,535lbs (9,315kg)

Excavator:		Volvo ECR460B		
Lift Capacity Interpolation:		lbs, over	PICK	PEmax

front

		short radius	*design radius*	long radius
	meters	6.00	*6.10*	7.50
high height	6.0	12,860		11,840
design height	*4.6*	*14,586*	*14,450*	12,545
low height	4.5	14,670		12,580

pick capacity = 14,450 kg > 9,315 OK

Lift Capacity Interpolation: lbs, over side

		short radius	*design radius*	PICK long radius PEmax
	meters	6.00	*6.10*	7.50
high height	6.0	12,860		9,880
design height	*4.6*	*13,422*	*13,170*	9,642
low height	4.5	13,450		9,630

pick capacity = 13,170 kg > 9,315 OK

Excavator: Volvo ECR460B
Lift Capacity Interpolation: lbs, over front

		short radius	*design radius*	SET long radius SEmax
	meters	6.00	*6.10*	7.50
high height	3.0	16,720		13,590
design height	*1.5*	*18,265*	*18,010*	14,446
low height	1.5	18,290		14,460

pick capacity = 18,010 kg > 9,315 OK

Lift Capacity Interpolation: lbs, over side

		short radius	*design radius*	SET long radius SEmax
	meters	6.00	*6.10*	7.50
high height	3.0	12,820		9,310
design height	*1.5*	*12,348*	*12,127*	9,044

low height	1.5	12,340			9,040	
pick capacity =	**12,127**	**kg**	**>**	**9,315**		**OK**

Pick must be made at no more than a 10’ height.

EQUIPMENT

EXCAVATOR, Link-Belt 350X2:

350X2 specifications

Operating Weight: 79,146 lbs. (35 900 kg)
SAE Net Horsepower: 271 HP (202 kW)
Bucket Range: 1.08 - 2.93 yd³ (.83 - 2.24 m³)

Engine

Isuzu AH-6HK1XYSS Tier 3 turbocharged diesel engine with electronic fuel control, 6-cylinder, water-cooled, EGR with cooler, air-to-air intercooler, fuel cooler, auto idle start, neutral safety start, glow plugs, auto warm-up, EPF engine protection, dual stage fuel filtration, remote oil filter, green plug oil drain.

SAE net horsepower	271 HP (202 kW) @ 2,000 rpm
Displacement	7.8 L
Maximum torque	797 lbf-ft (1 080 N-m) @ 1,500 rpm
Starter	24V-5.0kW
Alternator	50 amp
Battery	128 amp hours

Cab and Controls

Pressurized cab with climate control a/c and heat with defroster, LCD monitor, illuminated soft-touch switches, low-effort controls pre-wired for auxiliary hydraulics, control pattern changer, single pedal travel, sliding LEXAN® MARGARD® windows, safety glass front window with automatic locking system and vandal cover, intermittent windshield wiper with washer, emergency rear window exit, polycarbonate roof hatch with sunshade, shockless cab suspension with four fluid mountings, KAB® reclining suspension seat, sliding 4-position tilting control consoles, AM/FM radio, digital clock, dome light, seat belt, coat hook, cup holder, storage compartments, floor mat, footrests, ashtray, 24-volt cigarette lighter, 12-volt outlet, travel alarm, handrail, mirrors.

Four selectable working modes, anti-theft password protection system, on-board self-diagnostic system with memory, auto-idling system, one-touch decelerator, auto power boost, gate lock safety shutoff.

A/C output	18,100 BTU/hr
Heater output	20,150 BTU/hr
Sound level (inside cab)	70.7 dB(A)
Sound level (exterior)	102.9 dB(A)

Hydraulic System

Open-center system, two variable displacement axial piston pumps and one gear pump for pilot controls, main control valve with one 4-spool valve and one 5-spool valve with auxiliary spool - stackable, oil cooler, auto power boost, boom and arm holding valves, o-ring face seals, 6 micron return filter, firewall.

Hydraulic Pumps

Maximum flow	2 x 76.6 gpm (2 x 290 l/min)
Pilot pump maximum flow	7.9 gpm (30 l/min)

Relief Valve Settings

Boom/arm/bucket	4,970 psi (343 bar)
in Power-Boost Mode	5,410 psi (373 bar)
Swing circuit	4,410 psi (304 bar)
Travel	4,970 psi (343 bar)

Hydraulic Cylinders

	number of cylinders – bore x rod x stroke
Boom	2 – 5.7" x 3.9" x 58.9" (145 mm x 100 mm x 1 495 mm)
Arm	1 – 6.7" x 4.7" x 68.8" (170 mm x 120 mm x 1 748 mm)
Bucket	1 – 5.9" x 4.1" x 47.6" (150 mm x 105 mm x 1 210 mm)

Hydraulic Oil Filtration

Return filter	6 micron
Pilot filter	8 micron
Suction screen	105 micron

Swing

Planetary reduction powered by axial piston motor. Internal ring gear with grease cavity for swing pinion. Swing bearing is single-row shear type ball bearing. Mechanical disc swing brake. Auto power swing.

Swing speed	0 – 9.8 rpm
Tail swing	11' 4" (3.45 m)
Swing torque	82,607 lbf-ft. (112 kN•m)

Undercarriage

X Pattern carbody with 16' 4" (4.98 m) undercarriage by 8' 6" (2.6 m) track gauge, sealed and strutted track chain with track guide, sealed rollers and idlers, two-speed independent hydrostatic travel with compact planetary final drive, disc type brakes, adjustable track tension, swivel guard.

Carrier rollers	2 per side
Track rollers	8 per side
Track link pitch	8.50" (216 mm)
Shoes	48 per side
Shoe width	31.5" (800 mm)
Ground pressure	7.25 psi (.50 bar)

Lubricant and Coolant Capacity

Fuel tank	153.22 gal. (580 liters)
Hydraulic tank	46.23 gal. (175 liters)
Hydraulic system	92.46 gal. (350 liters)
Final drive (per side)	2.51 gal. (9.5 liters)
Swing drive	2.09 gal. (7.9 liters)
Engine oil	10.04 gal. (38.0 liters)
Cooling system	7.93 gal. (30.0 liters)

Travel System

Two-speed independent hydrostatic travel with compact axial piston motors. Hydraulic motor powered output shaft coupled to a planetary reduction unit and track sprocket. All hydraulic components mounted within the width of side frame. Automatic downshift. Single pedal travel. Spring applied, hydraulically released disc parking brake built into each motor. Each travel motor equipped with counterbalance valve to prevent overspeeding down an incline.

Max. travel speed	2.2 - 3.4 mph (3.5 - 5.5 km/h)
Drawbar pull	59,619 lbf (265 kN)
Gradeability	70% (35°)

Attachment

Boom	21' 2" (6.45 m)
Available Arms	**Digging Force***
• 10' 8" (3.25 m)	36,850 lbf (164 kN)
with Auto Power-Boost applied	40,020 lbf (178 kN)
• 8' 8" (2.63 m)	43,840 lbf (195 kN)
with Auto Power-Boost applied	47,430 lbf (211 kN)
• 13' 3" (4.04 m)	31,590 lbf (141 kN)
with Auto Power-Boost applied	34,310 lbf (153 kN)
Bucket Digging Force	51,440 lbf (229 kN)
with Auto Power-Boost applied	55,840 lbf (248 kN)

*Digging force ratings are based on ISO 6015, "Earthmoving Machinery – Hydraulic Excavators – Tool Forces."

Fuel Usage*

Heavy	10.6 gal / hr (40.1 liter / hr)
Average	8.5 gal / hr (32.2 liter / hr)
Light	5.3 gal / hr (20.0 liter / hr)

*Fuel economy varies widely depending on application. "Heavy" represents nearly continuous operation in tough digging applications in SP Mode. "Light" represents easy digging applications utilizing the machine about 50% of the time in SP Mode.

Operating Weight

Working weight with 31.5" (800 mm) shoes, 21' 2" (6.45 m) boom, 10' 8" (3.25 m) arm 2,580 lb. (1 170 kg) bucket, 16,314 lb. (7,400 kg) counterweight ..... 79,146 lbs (35,900 kg)

350 X2 Specifications

Working Ranges

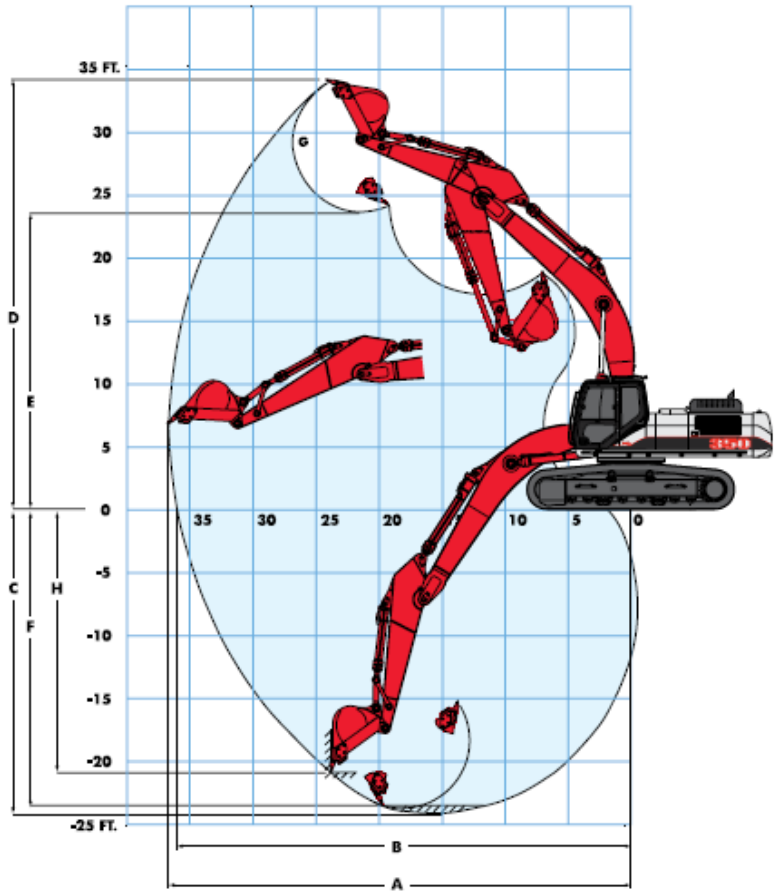

Machine equipped with 21′ 2″ (6.45 m) boom	10′ 8″ Arm (3.25 m)	8′ 8″ Arm (2.63 m)	13′ 3″ Arm (4.04 m)
A. Maximum reach	36′ 8″ (11.17 m)	35′ 0″ (10.67 m)	39′ 1″ (11.90 m)
B. Maximum reach @ ground level	36′ 0″ (10.98 m)	34′ 4″ (10.47 m)	38′ 5″ (11.72 m)
C. Maximum dig depth	24′1″ (7.34 m)	22′ 1″ (6.73 m)	26′ 8″ (8.14 m)
D. Maximum dig height	34′ 0″ (10.37 m)	33′ 10″ (10.32 m)	35′ 0″ (10.67 m)
E. Maximum dump height	23′ 9″ (7.23 m)	23′ 5″ (7.14 m)	24′ 9″ (7.54 m)
F. Digging depth – 8′ (2.44 m) level bottom	23′ 7″ (7.19 m)	21′ 6″ (6.55 m)	26′ 3″ (8.01 m)
G. Bucket rotation	173°	173°	173°
H. Maximum vertical wall depth	20′ 10″ (6.35 m)	19′ 7″ (5.97 m)	23′ 5″ (7.15 m)

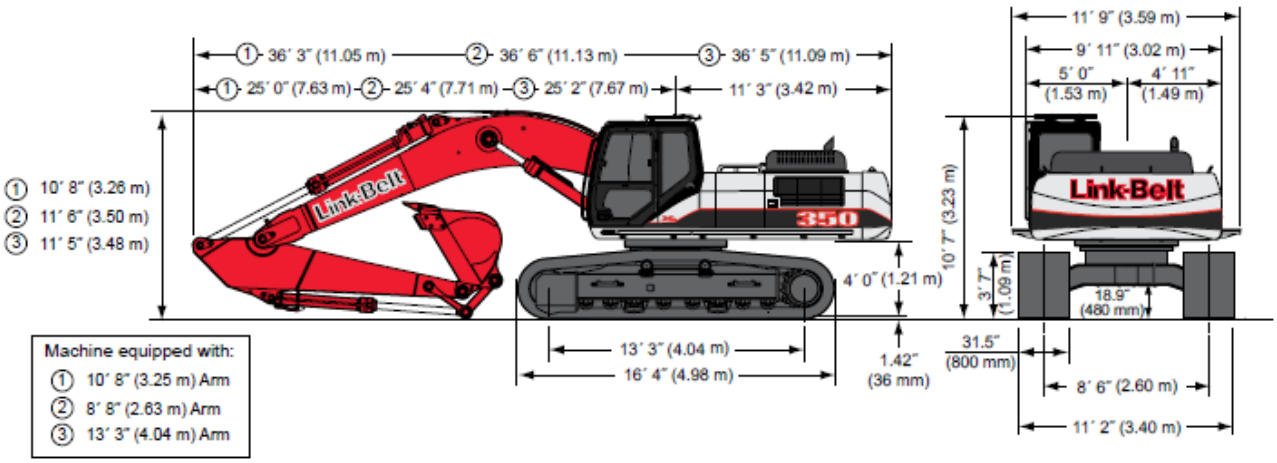

350 X2 Specifications

Lifting Capacities

10´ 8˝ (3.25 m) Arm with 21´ 2˝ (6.45 m) Boom and 2,577 lb. (1 169 kg) Bucket with Power-Boost Applied

Radius of Load															
		10´ 0˝ (3.05 m)		15´ 0˝ (4.57 m)		20´ 0˝ (6.10 m)		25´ 0˝ (7.62 m)		30´ 0˝ (9.14 m)		35´ 0˝ (10.67 m)		Cap. at Max. Reach	
		End	Side	End	Side	End	Side	End	Side	End	Side	End	Side	End	Side
+30´ 0˝	lbs													9,250*	9,250*
9.14 m	(kg)													4 196*	4 196*
+25´ 0˝	lbs													8,650*	8,650*
7.62 m	(kg)													3 924*	3 924*
+20´ 0˝	lbs							16,150*	15,350					8,450*	8,450*
6.10 m	(kg)							7 326*	6 963					3 833*	3 833*
+15´ 0˝	lbs					19,700*	19,700*	17,450*	14,850	15,950*	10,650			8,500*	8,100
4.57 m	(kg)					8 936*	8 936*	7 915*	6 736	7 235*	4 831			3 856*	3 674
+10´ 0˝	lbs	48,800*	48,800*	31,300*	31,300*	23,150*	20,250	19,300*	14,100	16,450	10,300			8,800*	7,600
3.05 m	(kg)	22 136*	22 136*	14 198*	14 198*	10 501*	9 185	8 754*	6 396	7 462	4 672			3 992*	3 447
+5´ 0˝	lbs	18,950*	18,950*	38,800*	29,100	26,700*	18,900	21,100*	13,400	16,050	9,900			9,400*	7,500
1.52 m	(kg)	8 596*	8 596*	17 600*	13 200	12 111*	8 573	9 571*	6 078	7 280	4 491			4 264*	3 402
Ground	lbs	25,100*	25,100*	41,000*	27,550	29,100*	17,900	20,900	12,800	15,700	9,600			10,300*	7,750
Line	(kg)	11 385*	11 385*	18 598*	12 497	13 200*	8 119	9 480	5 806	7 122	4 355			4 672*	3 515
-5´ 0˝	lbs	32,400*	32,400*	40,750*	27,150	29,200	17,400	20,500	12,450	15,500	9,400			11,750*	8,550
-1.52 m	(kg)	14 697*	14 697*	18 484*	12 315	13 245	7 893	9 299	5 647	7 031	4 264			5 330*	3 878
-10´ 0˝	lbs	45,550*	45,550*	38,750*	27,350	28,700*	17,350	20,450	12,350					14,250*	10,150
3.05 m	(kg)	20 661*	20 661*	17 577*	12 406	13 018*	7 870	9 276	5 602					6 454*	4 604
-15´ 0˝	lbs	47,600*	47,600*	34,050*	27,850	25,400*	17,650	18,500*	12,700					13,800*	13,800
4.57 m	(kg)	21 591*	21 591*	15 445*	12 633	11 521*	8 006	8 392*	5 761					6 260*	6 260
-20´ 0˝	lbs	33,750*	33,750*	24,800*	24,800*	16,900*	16,900*								
6.10 m	(kg)	15 309*	15 309*	11 249*	11 249*	7 666*	7 666*								

8´ 8˝ (2.63 m) Arm with 21´ 2˝ (6.45 m) Boom and 2,732 lb. (1 239 kg) Bucket with Power-Boost Applied

Radius of Load															
		10´ 0˝ (3.05 m)		15´ 0˝ (4.57 m)		20´ 0˝ (6.10 m)		25´ 0˝ (7.62 m)		30´ 0˝ (9.14 m)		35´ 0˝ (10.67 m)		Cap. at Max. Reach	
		End	Side	End	Side	End	Side	End	Side	End	Side	End	Side	End	Side
+30´ 0˝	lbs													13,200*	13,200*
9.14 m	(kg)													5 988*	5 988*
+25´ 0˝	lbs													12,250*	11,900
7.62 m	(kg)													5 557*	5 398
+20´ 0˝	lbs							17,600*	14,900					11,850*	9,800
6.10 m	(kg)							7 983*	6 759					5 375*	4 445
+15´ 0˝	lbs					21,450*	20,950*	18,700*	14,450					11,850*	8,700
4.57 m	(kg)					9 730*	9 503*	8 482*	6 555					5 375*	3 946
+10´ 0˝	lbs			33,400*	30,600	24,650*	19,650	20,300*	13,750	16,200	10,050			12,150*	8,150
3.05 m	(kg)			15 150*	13 880	11 181*	8 913	9 208*	6 237	7 348	4 559			5 511*	3 697
+5´ 0˝	lbs			38,450*	28,150	27,800*	18,400	21,250	13,100	15,850	9,750			12,800*	8,050
1.52 m	(kg)			17 441*	12 769	12 610*	8 346	9 639	5 942	7 190	4 423			5 806*	3 651
Ground	lbs			40,700*	27,000	29,400*	17,550	20,700	12,600	15,600	9,500			13,800	8,400
Line	(kg)			18 462*	12 247	13 336*	7 961	9 390	5 715	7 076	4 309			6 260	3 810
-5´ 0˝	lbs	32,400*	32,400*	39,950*	27,150	29,050	17,200	20,400	12,350					15,350	9,350
-1.52 m	(kg)	14 697*	14 697*	18 121*	12 315	13 177	7 802	9 253	5 602					6 963	4 241
-10´ 0˝	lbs	47,550*	47,550*	36,900*	27,450	27,650*	17,350	20,500	12,400					15,350*	11,450
3.05 m	(kg)	21 569*	21 569*	16 738*	12 451	12 542*	7 870	9 299	5 625					6 963*	5 194
-15´ 0˝	lbs	41,450*	41,450*	30,800*	28,050	22,950*	17,850								
4.57 m	(kg)	18 802*	18 802*	13 971*	12 723	10 410*	8 097								

13´ 3˝ (4.04 m) Arm with 21´ 2˝ (6.45 m) Boom and 2,306 lb. (1 046 kg) Bucket with Power-Boost Applied

Radius of Load															
		10´ 0˝ (3.05 m)		15´ 0˝ (4.57 m)		20´ 0˝ (6.10 m)		25´ 0˝ (7.62 m)		30´ 0˝ (9.14 m)		35´ 0˝ (10.67 m)		Cap. at Max. Reach	
		End	Side	End	Side	End	Side	End	Side	End	Side	End	Side	End	Side
+30´ 0˝	lbs													7,300*	7,300*
9.14 m	(kg)													3 311*	3 311*
+25´ 0˝	lbs													6,850*	6,850*
7.62 m	(kg)													3 107*	3 107*
+20´ 0˝	lbs									12,550*	11,100			6,700*	6,700*
6.10 m	(kg)									5 693*	5 035			3 039*	3 039*
+15´ 0˝	lbs							15,550*	15,150*	14,600*	10,850			6,750*	6,750*
4.57 m	(kg)							7 053*	6 872*	6 623*	4 922			3 062*	3 062*
+10´ 0˝	lbs					20,650*	20,350*	17,550*	14,400	15,650*	10,400	8,550*	7,700	7,000*	6,700
3.05 m	(kg)					9 367*	9 231*	7 961*	6 532	7 099*	4 717	3 878*	3 493	3 175*	3 039
+5´ 0˝	lbs	31,600*	31,600*	34,700*	30,000	24,400*	19,250	19,600*	13,500	16,100	9,950	10,800*	7,450	7,450*	6,550
1.52 m	(kg)	14 334*	14 334*	15 740*	13 608	11 068*	8 732	8 891*	6 124	7 303	4 513	4 899*	3 379	3 379*	2 971
Ground	lbs	26,600*	26,600*	39,550*	27,750	27,650*	18,000	20,900	12,750	15,600	9,500	10,050*	7,250	8,150*	6,750
Line	(kg)	12 066*	12 066*	17 940*	12 587	12 542*	8 165	9 480	5 783	7 076	4 309	4 559*	3 289	3 697*	3 062
-5´ 0˝	lbs	32,300*	32,300*	40,500*	26,700	29,050	17,200	20,350	12,250	15,300	9,200			9,250*	7,300
-1.52 m	(kg)	14 651*	14 651*	18 371*	12 111	13 177	7 802	9 231	5 557	6 940	4 173			4 196*	3 311
-10´ 0˝	lbs	40,200*	40,200*	39,600*	26,600	28,750	16,900	20,100	12,050	15,200	9,100			11,050*	8,400
3.05 m	(kg)	18 235*	18 235*	17 963*	12 066	13 041	7 666	9 117	5 466	6 895	4 128			5 012*	3 810
-15´ 0˝	lbs	52,550*	52,550*	36,550*	27,000	27,050*	17,050	20,250	12,150					14,100*	10,750
4.57 m	(kg)	23 837*	23 837*	16 579*	12 247	12 270*	7 734	9 185	5 511					6 396*	4 876
-20´ 0˝	lbs	42,300*	42,300*	30,000*	27,700	22,000*	17,650								
6.10 m	(kg)	19 187*	19 187*	13 608*	12 565	9 979*	8 006								

350 X2 Specifications

Bucket Sizes

Bucket Type	SAE Heaped Capacity (yd³)	(m³)	Width Outside Lip (in)	(mm)	Bucket Weight (lbs)	(kg)	Number of Teeth	Arm Length 8'-8" 2.63 m	10'-8" 3.25 m	13'-3" 4.04 m
STDP	1.26	0.96	30	762	2306	1046	4	H	H	H
	1.59	1.22	36	914	2516	1141	4	H	H	H
	1.92	1.47	42	1067	2789	1265	5	H	H	M
	2.25	1.72	48	1219	2956	1341	5	H	M	L
	2.59	1.98	54	1372	3226	1463	6	M	M	L
	2.93	2.24	60	1524	3396	1540	6	L	L	N/A
HDP	1.22	0.93	30	762	2886	1309	4	H	H	H
	1.54	1.18	36	914	3131	1420	4	H	H	H
	1.86	1.42	42	1067	3459	1569	5	H	H	M
	2.19	1.67	48	1219	3704	1680	5	H	M	L
	2.53	1.93	54	1372	4031	1828	6	M	L	L
XDP	1.12	0.86	30	762	3327	1509	4	H	H	H
	1.42	1.09	36	914	3620	1642	4	H	H	H
	1.73	1.32	42	1067	3994	1812	5	H	H	M
	2.04	1.56	48	1219	4287	1945	5	H	M	L
POWER	1.08	0.83	30	762	3461	1570	4	H	H	H
	1.35	1.03	36	914	3688	1673	4	H	H	H
	1.62	1.24	42	1067	3860	1751	5	H	H	M
	1.90	1.45	48	1219	4030	1828	5	H	M	L
	2.18	1.67	54	1372	4257	1931	6	M	M	L
DITCH	2.20	1.68	72	1829	2971	1348	0	H	M	L

STDP - Standard duty plate
HDP - Heavy duty plate
XDP - Extreme duty plate
POWER - HDP for use with ESCO multi-pin grabber only

Approval Code For Arm/Bucket Combinations

H..... Heavy material (up to 3,370 lbs./yd³)
M..... Medium material (up to 2,700 lbs./yd³)
L..... Light material (up to 2,020 lbs./yd³)
N/A..... Not applicable

Standard Equipment

- KAB 815 sliding/reclining suspension seat with adjustable 4-inch armrests, lumbar support and retractable seat belt
- Safety glass front window with auto lock, windshield wiper and washer with intermittent speeds, Lexan® side and rear tinted windows
- 4-position tilting consoles with memory position and hydraulic lock-out
- Auto climate control a/c and heat
- AM/FM stereo with mute button, horn, interior light, digital clock, hour meter, floor mat, cup holder, sun shade, storage, LH and RH rear view mirrors
- Single pedal travel
- Travel alarm with cancel switch
- Vandal guarding with bolt-on FOG capability
- EPA Tier III Isuzu diesel engine
- Common rail fuel injection
- Turbocharger with intercooler
- Neutral safety start
- Idle start
- Glow plug pre-heat
- Auto engine warm-up
- Auto idling system
- One-touch idle
- Dual remote fuel filters with water separation
- Double element air filter with in-cab restriction indicator
- External fuel gauge
- Remote, full-flow engine oil filter
- Green plug engine oil drain
- EPF Engine Protection
- Emergency engine stop
- Open-center hydraulic system
- Four selectable work modes including attachment mode
- Auto power boost
- Auto swing priority
- Pre-set auxiliary pump settings - 10
- Auxiliary valve
- Stackable main control valve
- Auxiliary pipe brackets
- Control levers pre-wired for auxiliary
- Control pattern changer
- Sealed and lubricated track chain
- Two-speed with auto shift and straight travel
- Planetary drive
- Spring-applied, hydraulic release brake
- Hydraulic track adjust
- Swivel guard belly pan
- Track guides
- Vandal locks with common key
- 16,314 lb. (7,400 kg) counterweight with lifting eyes
- 21-ft 2-in (6.45 m) boom
- EMS (Extended Maintenance System) 1,000 hour service interval throughout entire attachment except bucket
- Attachment cushion valve
- Arm and boom speed assistance
- Arm and boom regeneration
- Arm and boom holding valves
- Cylinder cushion
- Centralized lube bank
- Bucket anti-clatter device
- Illuminated LCD service monitor
- On-board diagnostic system
- Anti-theft device
- 12-volt accessory outlet
- 70-watt work lights on boom and upper

Options

- Arms
  - 10-ft 8-in (3.25 m)
  - 8-ft 8-in (2.63 m)
  - 13-ft 3-in (4.04 m)
- Tracks
  - 31.5-in (800 mm) 3-bar grouser
  - 27.5-in (700 mm) 3-bar grouser
  - 33.5-in (850 mm) 3-bar grouser
- Hydraulics
  - Single-acting with switch or pedal activation
  - Multi-function with switch activation and in-cab flow direction control
  - Thumb hydraulics with switch activation
  - 2nd and 3rd auxiliary with switch and pedal activation
- Couplers
  - ESCO multi-pin grabber
  - Dromone automatic quick-coupler
- Thumbs
  - Universal rigid
  - Hydraulic non-link
  - Hydraulic non-link for coupler
  - Hydraulic link
  - Hydraulic link for coupler
- Cab lights - exterior
- Air-suspension seat
- Free Swing
- Cyclone pre-clean air filter
- FOG guard
- Front guard - mesh or bars
- Attachment reinforcement plating
- HD bucket linkage
- Track guides - triple
- Catwalks

Notes: Excavator lifting capacities

1. Lifting capacities shown should not be exceeded. Weight of all lifting accessories must be deducted from the above lifting capacities.
2. Lifting capacities are based on machine standing on firm, uniform supporting surface. User must make allowances for job conditions such as soft or uneven ground.
3. Lifting capacities shown do not exceed 75% of minimum tipping loads or 87% of hydraulic capacities. Capacities marked with an asterisk (*) are limited by hydraulic capacities.
4. Least stable position is over the side.
5. Operator should be fully acquainted with the Operator's Manual & Operating Safety Booklet, furnished by LBX before operating the machine.
6. Capacities apply only to the machine as originally manufactured and normally equipped by LBX Company LLC.
7. Lift capacity ratings are based on SAE J1097, "Earthmoving Machinery – Hydraulic Excavators – Lift Capacity."

Link-Belt

EXCAVATOR, Volvo ECR460B:

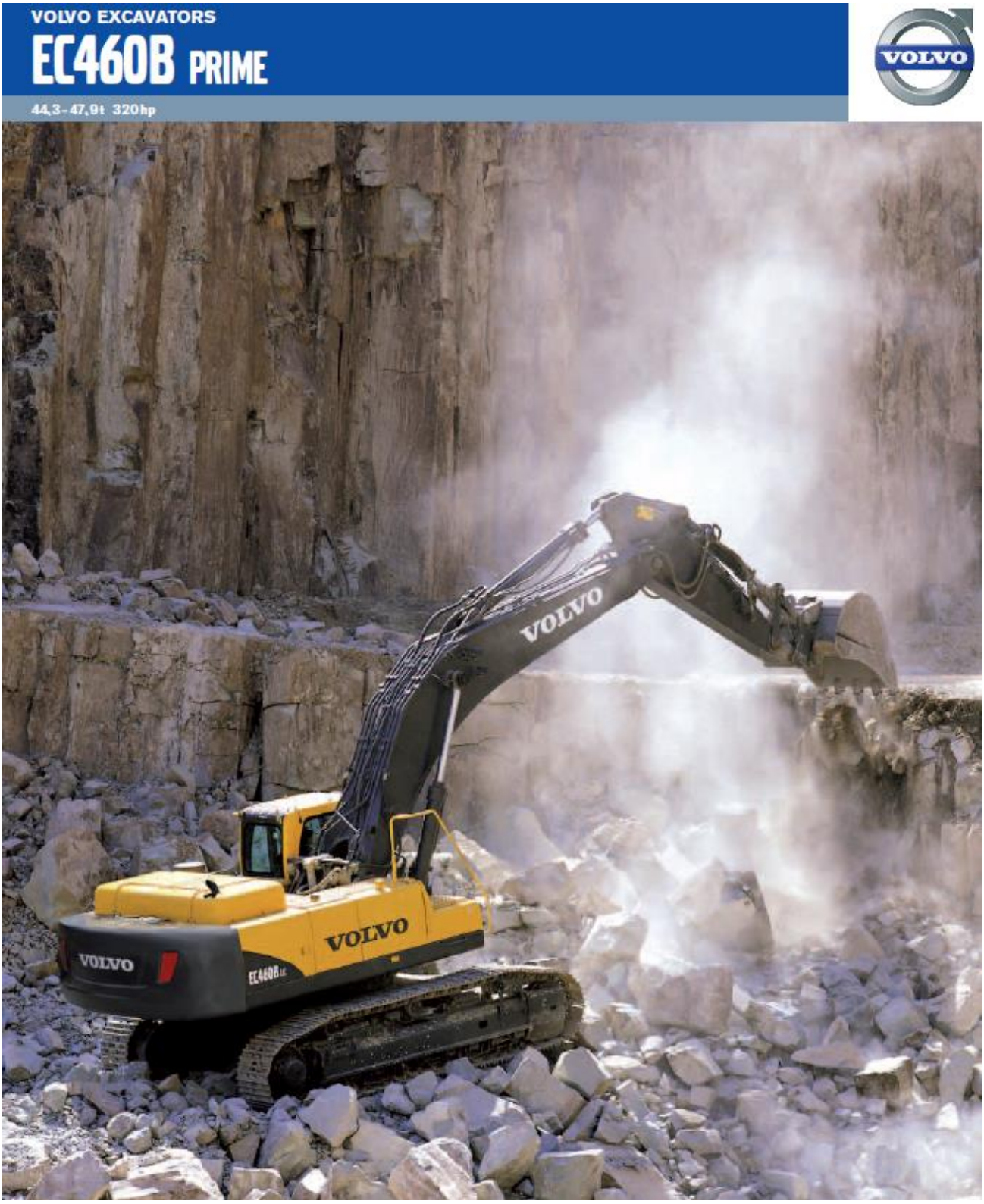

SPECIFICATIONS

Engine

The new Volvo diesel engine delivers lower emissions, superior performance and fuel efficiency. The engine uses precise, high-pressure fuel injectors turbo charger and electronic engine controls to optimize machine performance.

Automatic Idling System: Reduces engine speed to idle when the levers and pedals are not activated resulting in less fuel consumption and low cab noise levels.

Engine	Volvo D12D
Power output at	30 r/s (1,800 rpm)
Net (ISO 9249/SAE J1349)	235 kW (320 metric hp)
Gross (SAE J1995)	245 kW (333 metric hp)
Max. torque at 1,350 rpm	1,720 Nm
No. of cylinders	6
Displacement	12.1 l
Bore	131 mm
Stroke	150 mm

Electrical system

High-capacity electrical system that is well protected. Waterproof double-lock harness plugs are used to secure corrosion-free connections. The main relays and solenoid valves are shielded to prevent damage.

Contronics: provides advanced monitoring of machine functions and important diagnostic information.

Voltage	24 V
Batteries	2 x 12 V
Battery capacity	200 Ah
Alternator	28 V/80 A

Service refill capacities

Fuel tank	685 l
Hydraulic system, total	525 l
Hydraulic tank	270 l
Engine oil	42 l
Engine coolant	60 l
Swing reduction unit	2 x 6.0 l
Travel reduction unit	2 x 6.5 l

Swing system

The swing system uses two axial piston motors, driving two planetary gearboxes for maximum torque. Automatic swing holding brake and anti-rebound valve are standard.

Max. swing speed	8.5 rpm

Drive

Each track is powered by an automatic two-speed shift travel motor. The track brakes are multi-disc, spring-applied and hydraulic released. The travel motor, brake and planetary gears are well protected within the track frame.

Max. tractive effort	324.6 kN (33,100 kg)
Max. travel speed	2.9/4.8 km/h
Gradeability	35° (70%)

Undercarriage

The undercarriage has a robust X-shaped frame. Greased and sealed track chains are standard.

Fixed undercarriage (Std.):	
No. of track pads	2 x 52
Link pitch	216 mm
Shoe width, triple grouser	600/700/800/900 mm
Shoe width, double grouser	600 mm
No. of bottom rollers	2 x 9
No. of top rollers	2 x 2

Mechanically retractable undercarriage (Opt.):	
No. of track pads	2 x 52
Link pitch	216 mm
Shoe width, triple grouser	600/700/800/900 mm
Shoe width, double grouser	600 mm
No. of bottom rollers	2 x 9
No. of top rollers	2 x 3

Hydraulic system

The hydraulic system, also known as the "Integrated work mode control", is designed for high-productivity, high-digging capacity, high-maneuvering precision and good fuel economy. The summation system, boom, arm and swing priority along with boom and arm regeneration provide optimum performance.

The following important functions are included in the system:

Summation system: Combines the flow of both hydraulic pumps to ensure quick cycle times and high productivity.

Boom priority: Gives priority to the boom operation for faster raising when loading or performing deep excavations.

Arm priority: Gives priority to the arm operation for faster cycle times in leveling and for increased bucket filling when digging.

Swing priority: Gives priority to swing functions for faster simultaneous operations.

Regeneration system: Prevents cavitation and provides flow to other movements during simultaneous operations for maximum productivity.

Power boost: All digging and lifting forces are increased.

Holding valves: Boom and arm holding valves prevent the digging equipment from creeping.

Main pump	
Type	2 x variable displacement axial piston pumps
Maximum flow	2 x 345 l/min
Pilot pump	
Type	Gear pump
Maximum flow	1 x 31 l/min

Hydraulic motors	
Travel	Variable displacement axial piston motors with mechanical brake
Swing	Fixed displacement axial piston motor with mechanical brake

Relief valve setting	
Implement	31.4/34.3 Mpa (320/350 kg/cm²)
Travel system	31.4 Mpa (320 kg/cm²)
Swing system	24.5 Mpa (250 kg/cm²)
Pilot system	3.9 Mpa (40 kg/cm²)

Hydraulic cylinders	
Boom	2
Bore x Stroke	ø165 x 1,590 mm
Arm	1
Bore x Stroke	ø190 x 1,850 mm
Bucket	1
Bore x Stroke	ø165 x 1,335 mm
ME bucket	1
Bore x Stroke	ø175 x 1,335 mm

Cab

The operator's cab has easy access via a wide door opening. The cab is supported on hydraulic dampening mounts to reduce shock and vibration levels. These along with sound absorbing lining provide low noise levels. The cab has excellent all-round visibility. The front windshield can easily slide up into the ceiling and the lower front glass can be removed and stored in the side door.

Integrated air conditioning and heating system: The pressurized and filtered cab air is supplied by an automatically controlled fan. The air is distributed throughout the cab from 13 vents.

Ergonomic operator's seat: The adjustable seat and joystick console move independently to accommodate the operator. The seat has nine different adjustments plus a seat belt for the operator's comfort and safety.

Sound level in cab according to ISO 6396:	LpA 73 dB(A)
External sound level according to ISO 6395 and EU Directive 2000/14/EC:	LwA 106 dB(A)

Ground pressure

- **Machine with fixed undercarriage** 7.0 m boom, 3.35 m arm, 2,060 l (1,730 kg) bucket and 8,700 kg counterweight.

Description	Shoe width	Operating weight up to	Ground pressure	Overall width
Triple grouser	600 mm	44,500 kg	77.5 kPa (0.79 kg/cm²)	3,340 mm
	700 mm	45,000 kg	67.7 kPa (0.69 kg/cm²)	3,440 mm
	800 mm	45,500 kg	59.8 kPa (0.61 kg/cm²)	3,540 mm
	900 mm	46,020 kg	53.9 kPa (0.55 kg/cm²)	3,640 mm
Double grouser	600 mm	44,250 kg	76.5 kPa (0.78 kg/cm²)	3,340 mm

- **Machine with retractable undercarriage** 7.0 m boom, 3.35 m arm, 2,060 l (1,730 kg) bucket and 8,700 kg counterweight.

Description	Shoe width	Operating weight up to	Ground pressure	Overall width
Triple grouser	600 mm	45,700 kg	79.4 kPa (0.81 kg/cm²)	3,490 mm
	700 mm	46,220 kg	68.6 kPa (0.70 kg/cm²)	3,590 mm
	800 mm	46,740 kg	60.8 kPa (0.62 kg/cm²)	3,690 mm
	900 mm	47,260 kg	54.9 kPa (0.56 kg/cm²)	3,790 mm
Double grouser	600 mm	45,450 kg	79.4 kPa (0.81 kg/cm²)	3,490 mm

- **Machine with fixed undercarriage** 7.0 m boom, 3.35 m arm, 2,060 l (1,730 kg) bucket and 9,300 kg counterweight.

Description	Shoe width	Operating weight up to	Ground pressure	Overall width
Triple grouser	600 mm	45,100 kg	78.5 kPa (0.80 kg/cm²)	3,340 mm
	700 mm	45,600 kg	67.7 kPa (0.69 kg/cm²)	3,440 mm
	800 mm	46,100 kg	59.8 kPa (0.61 kg/cm²)	3,540 mm
	900 mm	46,620 kg	53.9 kPa (0.55 kg/cm²)	3,640 mm
Double grouser	600 mm	44,850 kg	77.5 kPa (0.79 kg/cm²)	3,340 mm

- **Machine with retractable undercarriage** 7.0 m boom, 3.35 m arm, 2,060 l (1,730 kg) bucket and 9,300 kg counterweight.

Description	Shoe width	Operating weight up to	Ground pressure	Overall width
Triple grouser	600 mm	46,300 kg	80.4 kPa (0.82 kg/cm²)	3,490 mm
	700 mm	46,820 kg	69.6 kPa (0.71 kg/cm²)	3,590 mm
	800 mm	47,340 kg	61.8 kPa (0.63 kg/cm²)	3,690 mm
	900 mm	47,860 kg	55.9 kPa (0.57 kg/cm²)	3,790 mm
Double grouser	600 mm	46,050 kg	80.4 kPa (0.82 kg/cm²)	3,490 mm

Dimensions

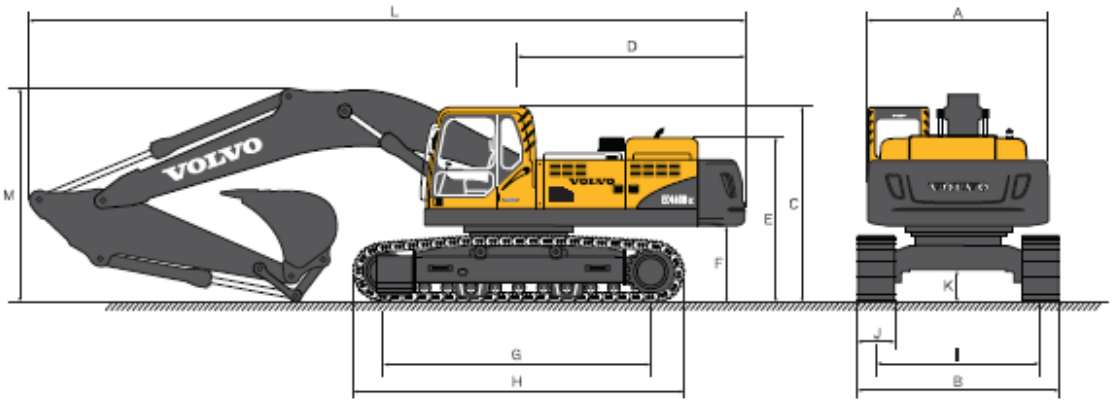

Machine with fixed undercarriage	Unit	6.5 m ME boom	7.0 m boom			
		2.55 m arm	2.55 m arm	3.35 m arm	3.9 m arm	4.8 m arm
A. Overall width of superstructure	mm	2,990	2,990	2,990	2,990	2,990
B. Overall width	mm	3,340	3,340	3,340	3,340	3,340
C. Overall height of cab	mm	3,250	3,250	3,250	3,250	3,250
D. Tail swing radius	mm	3,800	3,800	3,800	3,800	3,800
E. Overall height of engine hood	mm	2,750	2,750	2,750	2,750	2,750
F. Counterweight clearance *	mm	1,275	1,275	1,275	1,275	1,275
G. Tumbler length	mm	4,370	4,370	4,370	4,370	4,370
H. Track length	mm	5,370	5,370	5,370	5,370	5,370
I. Track gauge	mm	2,740	2,740	2,740	2,740	2,740
J. Shoe width	mm	600	600	600	600	600
K. Min. ground clearance *	mm	550	550	550	550	550
L. Overall length	mm	11,640	12,140	12,150	12,150	12,020
M. Overall height of boom	mm	3,770	3,630	3,650	3,690	4,650

Machine with mechanically retractable undercarriage	Unit	6.5 m ME boom	7.0 m boom			
		2.55 m arm	2.55 m arm	3.35 m arm	3.9 m arm	4.8 m arm
A. Overall width of superstructure	mm	2,990	2,990	2,990	2,990	2,990
B. Overall width (extended)	mm	3,490	3,490	3,490	3,490	3,490
Overall width (retracted)	mm	2,990	2,990	2,990	2,990	2,990
C. Overall height of cab	mm	3,360	3,360	3,360	3,360	3,360
D. Tail swing radius	mm	3,800	3,800	3,800	3,800	3,800
E. Overall height of engine hood	mm	2,860	2,860	2,860	2,860	2,860
F. Counterweight clearance *	mm	1,385	1,385	1,385	1,385	1,385
G. Tumbler length	mm	4,370	4,370	4,370	4,370	4,370
H. Track length	mm	5,370	5,370	5,370	5,370	5,370
I. Track gauge (extended)	mm	2,890	2,890	2,890	2,890	2,890
Track gauge (retracted)	mm	2,390	2,390	2,390	2,390	2,390
J. Shoe width	mm	600	600	600	600	600
K. Min. ground clearance *	mm	746	746	746	746	746
L. Overall length	mm	11,620	12,140	12,150	12,150	12,020
M. Overall height of boom	mm	3,800	3,770	3,790	3,830	4,790

Working ranges & digging forces

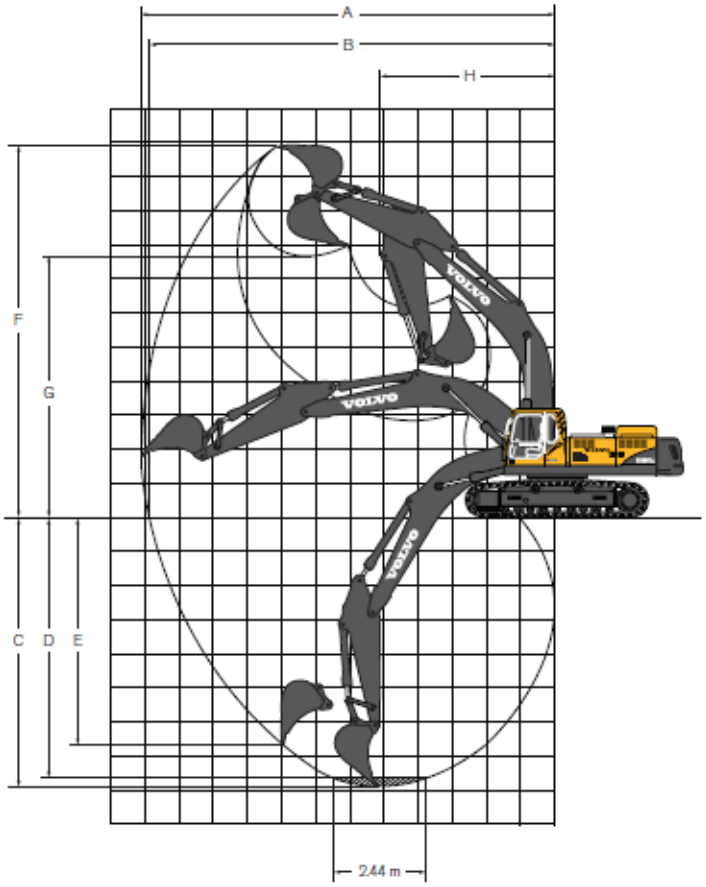

Machine with direct fit bucket: fixed undercarriage	Unit	6.5 m ME boom	7.0 m boom			
		2.55 m arm	2.55 m arm	3.35 m arm	3.9 m arm	4.8 m arm
A. Max. digging reach	mm	10,900	11,310	12,000	12,500	13,220
B. Max. digging reach on ground	mm	10,660	11,070	11,780	12,290	13,020
C. Max. digging depth	mm	6,570	6,900	7,700	8,250	9,150
D. Max. digging depth (2.44 m level)	mm	6,400	6,720	7,550	8,120	9,030
E. Max. vertical wall digging depth	mm	5,800	6,150	6,840	7,300	7,730
F. Max. cutting height	mm	10,580	10,820	10,970	11,150	11,090
G. Max. dumping height	mm	6,980	7,440	7,650	7,840	7,870
H. Min. front swing radius	mm	4,770	5,170	5,090	4,990	5,040

Digging forces with direct fit bucket		Unit	6.5 m ME boom	7.0 m boom			
			2.55 m arm	2.55 m arm	3.35 m arm	3.9 m arm	4.8 m arm
Bucket radius		mm	1,923	1,810	1,810	1,810	1,810
Breakout force – bucket (Normal/Power boost)	SAE J1179	kN	245.2/267.7	222.6/244.2	222.6/244.2	222.6/244.2	222.6/244.2
	ISO 6015	kN	276.5/302.0	253.0/276.5	253.0/276.5	253.0/276.5	253.0/276.5
Tearout force – arm (Normal/Power boost)	SAE J1179	kN	217.7/237.3	224.6/245.2	190.2/208.9	170.6/186.3	154.9/169.6
	ISO 6015	kN	224.6/246.1	231.4/253.0	195.1/213.8	173.6/190.2	157.9/172.6
Rotation angle, bucket		deg	169	183	183	183	183

Working ranges & digging forces

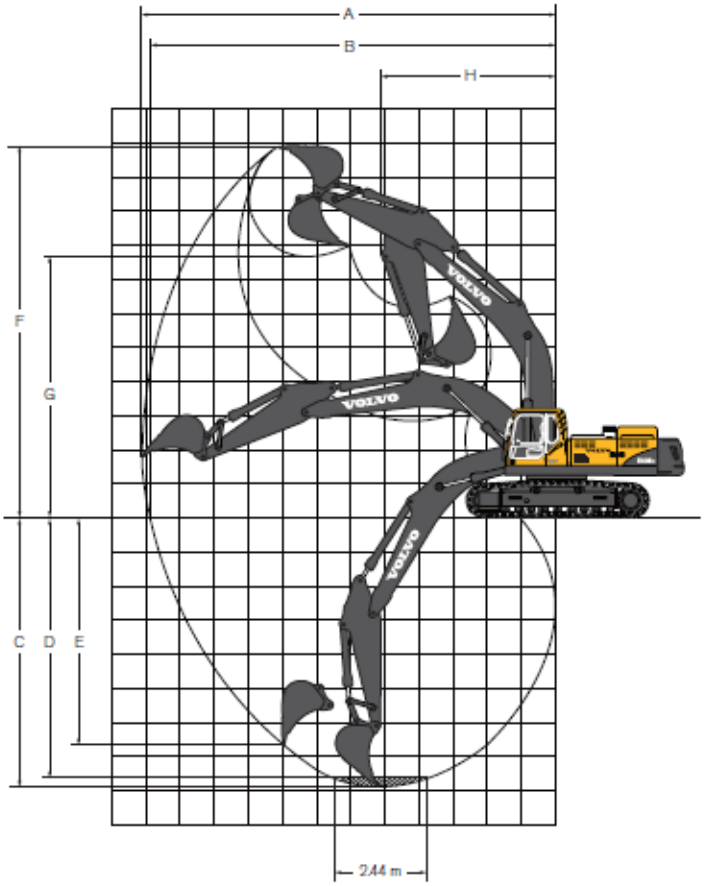

Machine with direct fit bucket: mechanically retractable undercarriage	Unit	6.5 m ME boom	7.0 m boom			
		2.55 m arm	2.55 m arm	3.35 m arm	3.9 m arm	4.8 m arm
A. Max. digging reach	mm	10,900	11,310	12,000	12,500	13,220
B. Max. digging reach on ground	mm	10,630	11,050	11,750	12,260	12,990
C. Max. digging depth	mm	6,440	6,770	7,570	8,120	9,020
D. Max. digging depth (2.44 m level)	mm	6,270	6,590	7,420	7,980	8,900
E. Max. vertical wall digging depth	mm	5,670	6,020	6,710	7,170	7,600
F. Max. cutting height	mm	10,710	10,950	11,110	11,260	11,220
G. Max. dumping height	mm	7,110	7,570	7,780	7,970	8,000
H. Min. front swing radius	mm	4,770	5,170	5,090	4,990	5,040

Digging forces with direct fit bucket		Unit	6.5 m ME boom	7.0 m boom			
			2.55 m arm	2.55 m arm	3.35 m arm	3.9 m arm	4.8 m arm
Bucket radius		mm	1,923	1,810	1,810	1,810	1,810
Breakout force – bucket (Normal/Power boost)	SAE J1179	kN	245.2/267.7	222.6/244.2	222.6/244.2	222.6/244.2	222.6/244.2
	ISO 6015	kN	276.5/302.0	253.0/276.5	253.0/276.5	253.0/276.5	253.0/276.5
Tearout force – arm (Normal/Power boost)	SAE J1179	kN	217.7/237.3	224.6/245.2	190.2/208.9	170.6/186.3	154.9/169.6
	ISO 6015	kN	224.6/246.1	231.4/253.0	195.1/213.8	173.6/190.2	157.9/172.6
Rotation angle, bucket		deg	169	183	183	183	183

Lifting capacity

At the arm end without bucket

For lifting capacity including bucket, simply subtract actual weight of the direct fit bucket or the bucket with quick fit from the following values.

- **EC460B LC prime with fixed undercarriage**

Across undercarriage / Along undercarriage	Lifting hook related to ground level	3.0 m		4.5 m		6.0 m		7.5 m		9.0 m		Max. reach		
		Along undercarriage	Across undercarriage	Along undercarriage	Across undercarriage	Along undercarriage	Across undercarriage	Along undercarriage	Across undercarriage	Along undercarriage	Across undercarriage	Along undercarriage	Across undercarriage	Max. mm
ME boom 6.5 m + Arm 2.55 m + Shoe 600 mm + Counterweight 8,700 kg	6.0 m kg					*12,860	*12,860	*11,840	9,880			*11,050	8,620	8,140
	4.5 m kg			*19,240	*19,240	*14,670	13,450	*12,580	9,630			*11,060	7,650	8,680
	3.0 m kg			*22,060	19,330	*16,720	12,820	*13,590	9,310			11,340	7,170	8,940
	1.5 m kg			*15,740	*15,740	*18,290	12,340	*14,460	9,040			11,210	7,060	8,940
	0 m kg			*23,190	18,500	*18,930	12,090	14,390	8,880			11,640	7,300	8,680
	-1.5 m kg	*16,930	*16,930	*24,370	18,570	*18,520	12,050	14,380	8,860			12,810	7,990	8,130
	-3.0 m kg	*28,150	*28,150	*21,790	18,830	*16,760	12,210					*13,030	9,510	7,230
	-4.5 m kg			*16,830	*16,830							*12,390	*12,390	5,810
Boom 7.0 m + Arm 2.55 m + Shoe 600 mm + Counterweight 8,700 kg	6.0 m kg					*12,630	*12,630	*11,310	9,910			*10,980	7,760	8,710
	4.5 m kg					*14,650	13,260	*12,250	9,580	*11,110	7,260	10,940	6,980	9,220
	3.0 m kg					*16,750	12,580	*13,350	9,230	11,210	7,100	10,380	6,590	9,460
	1.5 m kg					*18,240	12,110	*14,270	8,940	11,050	6,960	10,280	6,490	9,460
	0 m kg					*18,790	11,900	14,260	8,770	10,970	6,880	10,610	6,670	9,210
	-1.5 m kg			*23,890	18,340	*18,450	11,880	14,230	8,740			11,530	7,220	8,700
	-3.0 m kg	*25,020	*25,020	*21,800	18,590	*17,100	12,030	*13,300	8,880			*12,280	8,380	7,870
	-4.5 m kg			*18,060	*18,060	*13,930	12,410					*12,020	10,970	6,590
Boom 7.0 m + Arm 3.35 m + Shoe 600 mm + Counterweight 8,700 kg	6.0 m kg							*10,290	10,140	*9,860	7,570	* 8,660	6,940	9,460
	4.5 m kg			*17,390	*17,390	*13,320	*13,320	*11,360	9,790	*10,320	7,410	*8,730	6,310	9,930
	3.0 m kg			*22,140	19,420	*15,620	12,900	*12,620	9,390	*10,980	7,200	*9,030	5,990	10,150
	1.5 m kg			*14,340	*14,340	*17,490	12,310	*13,750	9,050	11,120	7,010	9,300	5,890	10,150
	0 m kg			*17,590	*17,590	*18,550	11,970	14,320	8,810	10,960	6,870	9,540	6,020	9,920
	-1.5 m kg	*12,690	*12,690	*25,020	18,190	*18,720	11,850	14,200	8,710	10,920	6,830	10,210	6,410	9,450
	-3.0 m kg	*21,670	*21,670	*23,500	18,360	*17,960	11,910	*14,150	8,740			11,560	7,240	8,690
	-4.5 m kg	*27,480	*27,480	*20,640	18,720	*15,930	12,140	*11,970	9,000			*11,780	8,910	7,560
Boom 7.0 m + Arm 3.9 m + Shoe 600 mm + Counterweight 8,700 kg	6.0 m kg							*9,450	*9,450	*9,090	7,600	*6,990	6,320	9,990
	4.5 m kg					*12,190	*12,190	*10,560	9,820	*9,650	7,400	*7,050	5,780	10,440
	3.0 m kg			*20,150	19,720	*14,550	12,950	*11,880	9,380	*10,390	7,150	*7,280	5,480	10,650
	1.5 m kg			*19,550	18,460	*16,630	12,260	*13,130	8,970	11,030	6,920	*7,710	5,380	10,650
	0 m kg			*19,410	17,920	*17,980	11,810	*14,060	8,680	10,840	6,740	*8,390	5,480	10,430
	-1.5 m kg	*12,720	*12,720	*24,360	17,790	*18,480	11,610	14,010	8,520	10,730	6,650	9,290	5,790	9,980
	-3.0 m kg	*19,640	*19,640	*24,030	17,900	*18,090	11,600	13,990	8,500	10,770	6,680	10,350	6,440	9,270
	-4.5 m kg	*28,640	*28,640	*21,730	18,210	*16,620	11,780	*12,910	8,660			*11,180	7,710	8,220
	-6.0 m kg			*17,480	*17,480	*13,150	12,220					*11,160	10,590	6,670
Boom 7.0 m + Arm 4.8 m + Shoe 600 mm + Counterweight 8,700 kg	6.0 m kg									*7,930	7,700	*6,480	5,590	10,760
	4.5 m kg							*9,250	*9,250	*8,600	7,450	*6,570	5,130	11,180
	3.0 m kg			*16,980	*16,980	*12,770	*12,770	*10,660	9,460	*9,440	7,150	*6,800	4,870	11,380
	1.5 m kg			*21,240	18,810	*15,130	12,370	*12,070	8,980	*10,310	6,860	*7,200	4,760	11,380
	0 m kg			*23,570	17,840	*16,920	11,750	*13,240	8,580	10,730	6,620	7,780	4,810	11,170
	-1.5 m kg	*12,870	*12,870	*24,770	17,440	*17,920	11,390	13,830	8,330	10,550	6,460	8,170	5,030	10,750
	-3.0 m kg	*18,000	*18,000	*24,500	17,380	*18,090	11,270	13,710	8,230	10,490	6,400	8,940	5,500	10,090
	-4.5 m kg	*24,690	*24,690	*23,070	17,570	*17,330	11,340	*13,590	8,280	10,600	6,500	10,370	6,370	9,140
	-6.0 m kg	*28,230	*28,230	*20,130	18,000	*15,250	11,630	*11,580	8,540			*10,880	8,140	7,780