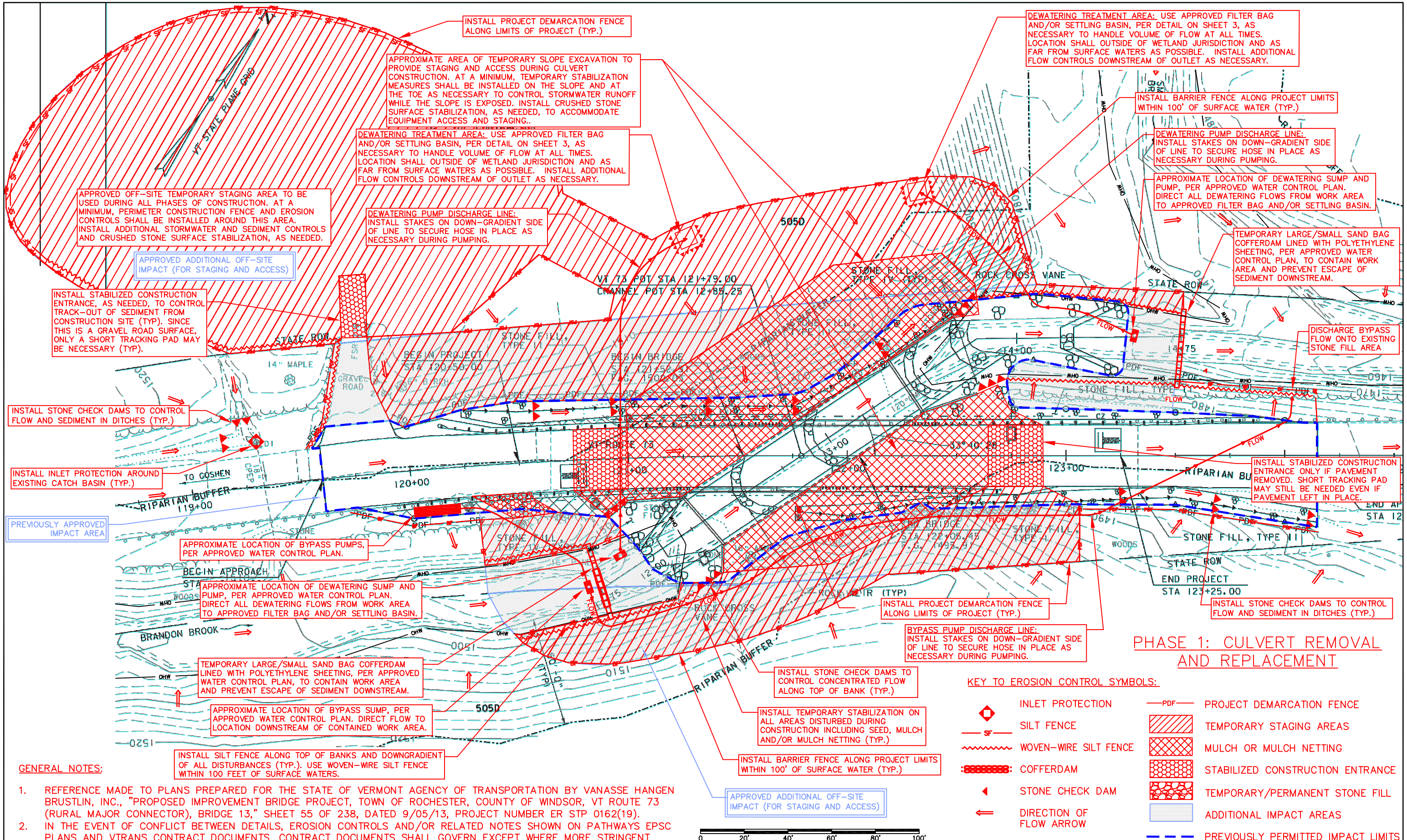

PHASE 1: CULVERT REMOVAL AND REPLACEMENT

KEY TO EROSION CONTROL SYMBOLS:

- INLET PROTECTION
- SILT FENCE
- WOVEN-WIRE SILT FENCE
- COFFERDAM
- STONE CHECK DAM
- DIRECTION OF FLOW ARROW
- BARRIER FENCE
- PROJECT DEMARCATION FENCE
- TEMPORARY STAGING AREAS
- MULCH OR MULCH NETTING
- STABILIZED CONSTRUCTION ENTRANCE
- TEMPORARY/PERMANENT STONE FILL
- ADDITIONAL IMPACT AREAS
- PREVIOUSLY PERMITTED IMPACT LIMITS

GENERAL NOTES:

1. REFERENCE MADE TO PLANS PREPARED FOR THE STATE OF VERMONT AGENCY OF TRANSPORTATION BY VANASSE HANGEN BRUSTLIN, INC., "PROPOSED IMPROVEMENT BRIDGE PROJECT, TOWN OF ROCHESTER, COUNTY OF WINDSOR, VT ROUTE 73 (RURAL MAJOR CONNECTOR), BRIDGE 13," SHEET 55 OF 238, DATED 9/05/13, PROJECT NUMBER ER STP 0162(19).
2. IN THE EVENT OF CONFLICT BETWEEN DETAILS, EROSION CONTROLS AND/OR RELATED NOTES SHOWN ON PATHWAYS EPSC PLANS AND VTRANS CONTRACT DOCUMENTS, CONTRACT DOCUMENTS SHALL GOVERN EXCEPT WHERE MORE STRINGENT REGULATORY REQUIREMENTS APPLY.

REVISION NO.	DATE	DESCRIPTION	MADE BY	CHECKED BY	APPROVED BY
1	08/15/14	ADDITIONAL REVISIONS PER VTRANS	SAW	RJF	SAW
1	08/08/14	REVISIONS PER VTRANS COMMENTS DATED 08/05/14	SAW	RJF	SAW

BRIDGE NO. 13 – PHASE 1 EROSION PREVENTION AND SEDIMENT CONTROL PLAN FOR W.M. SCHULTZ CONSTRUCTION, INC FOR

VERMONT AGENCY OF TRANSPORTATION - ROCHESTER ER STP 0162 (19)

VERMONT ROUTE 73, ROCHESTER, VERMONT

PATHWAYS CONSULTING, LLC
240 MECHANIC STREET, SUITE 100
LEBANON, NEW HAMPSHIRE 03766
(603) 448-2200

SCALE: 1"= 40'	
DESIGNED BY: SAW	
DRAWN BY: SAW	
CHECKED BY: SAW	
DATE: 08/01/14	
PROJ. NO. 12455	SHEET 1 OF 3

1

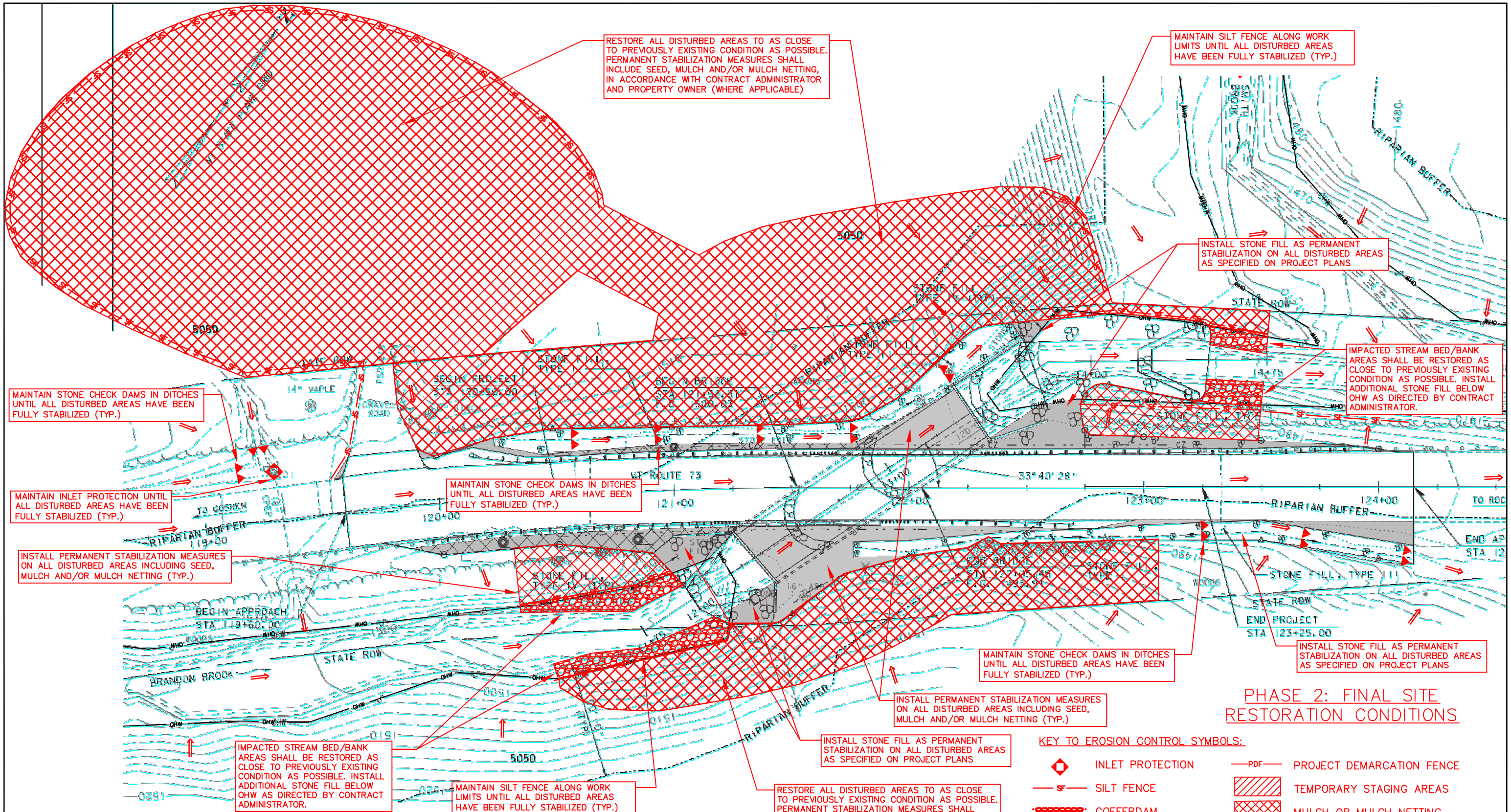

PHASE 2: FINAL SITE RESTORATION CONDITIONS

KEY TO EROSION CONTROL SYMBOLS:

- INLET PROTECTION
- SF — SILT FENCE
- COFFERDAM
- STONE CHECK DAM
- DIRECTION OF FLOW ARROW
- TURBIDITY BARRIER
- PDF — PROJECT DEMARCATION FENCE
- TEMPORARY STAGING AREAS
- MULCH OR MULCH NETTING
- STABILIZED CONSTRUCTION ENTRANCE
- TEMPORARY/PERMANENT STONE FILL
- ADDITIONAL IMPACT AREAS
- PREVIOUSLY PERMITTED IMPACT LIMITS

GENERAL NOTES:

1. REFERENCE MADE TO PLANS PREPARED FOR THE STATE OF VERMONT AGENCY OF TRANSPORTATION BY VANASSE HANGEN BRUSTLIN, INC., "PROPOSED IMPROVEMENT BRIDGE PROJECT, TOWN OF ROCHESTER, COUNTY OF WINDSOR, VT ROUTE 73 (RURAL MAJOR CONNECTOR), BRIDGE 13," SHEET 56 OF 238, DATED 9/05/13, PROJECT NUMBER ER STP 0162(19).
2. IN THE EVENT OF CONFLICT BETWEEN DETAILS, EROSION CONTROLS AND/OR RELATED NOTES SHOWN ON PATHWAYS EPSC PLANS AND VTRANS CONTRACT DOCUMENTS, CONTRACT DOCUMENTS SHALL GOVERN EXCEPT WHERE MORE STRINGENT REGULATORY REQUIREMENTS APPLY.

REVISION NO.	DATE	DESCRIPTION	MADE BY	CHECKED BY	APPROVED BY

BRIDGE NO. 13 – PHASE 2 EROSION PREVENTION AND SEDIMENT CONTROL PLAN FOR W.M. SCHULTZ CONSTRUCTION, INC FOR

VERMONT AGENCY OF TRANSPORTATION - ROCHESTER ER STP 0162 (19)

VERMONT ROUTE 73, ROCHESTER, VERMONT

PATHWAYS CONSULTING, LLC
240 MECHANIC STREET, SUITE 100
LEBANON, NEW HAMPSHIRE 03766
(603) 448-2200

SCALE: 1"= 40'	
DESIGNED BY: SAW	
DRAWN BY: SAW	
CHECKED BY: SAW	
DATE: 08/01/14	
PROJ. NO. 12455	SHEET 2 OF 3

2

EROSION CONTROL SPECIFICATIONS

1. SOIL EROSION AND SEDIMENT CONTROL MEASURES SHALL BE IN ACCORDANCE WITH "THE VERMONT STANDARDS & SPECIFICATIONS FOR EROSION PREVENTION & SEDIMENT CONTROL," 2006, AND "LOW RISK SITE HANDBOOK FOR EROSION PREVENTION AND SEDIMENT CONTROL," AUGUST 2006. THE CONTRACTOR SHALL HAVE REFERENCE TO THESE PUBLICATIONS.
2. IMMEDIATE ATTENTION TO EROSION CONTROL PRACTICES DRAMATICALLY IMPROVES SOIL AND MOISTURE CONSERVATION AND REDUCES NEGATIVE IMPACTS ON WATER QUALITY. THE CONTRACTOR SHALL GIVE PRIORITY TO THE TIMELY INSTALLATION OF BOTH TEMPORARY AND PERMANENT EROSION AND SEDIMENT CONTROL MEASURES.
3. THE EROSION AND SEDIMENT CONTROL PRACTICES SHOWN ON THIS PLAN ARE THE MINIMUM REQUIRED FOR ANTICIPATED SITE CONDITIONS. DURING THE CONSTRUCTION PERIOD, THESE PRACTICES SHALL BE UPGRADED AS NEEDED FOR UNEXPECTED STORM EVENTS AND MODIFIED TO ACCOUNT FOR CHANGING SITE CONDITIONS.
4. THE BOUNDARIES OF THE CLEARING LIMITS SHOWN ON THE PLANS SHALL BE CLEARLY FLAGGED BY SURVEY TAPE OR FENCING, AS SHOWN ON THE PLANS, PRIOR TO CONSTRUCTION. DURING THE CONSTRUCTION PERIOD, NO DISTURBANCE BEYOND THE CLEARING LIMITS SHALL BE PERMITTED. THE CLEARING LIMITS SHALL BE MAINTAINED FOR THE DURATION OF CONSTRUCTION.
5. THE SMALLEST PRACTICAL AREA SHALL BE DISTURBED DURING CONSTRUCTION AT ANY ONE TIME BEFORE STABILIZATION. A CONSTRUCTION SEQUENCE HAS BEEN DEVELOPED TO FACILITATE INSTALLATION OF EROSION CONTROL MEASURES AND THE COMPLETION OF GRADING, SEEDING, AND LANDSCAPING AS SOON AS POSSIBLE WITHIN A DISTURBED AREA.
6. INSTALL EROSION CONTROL MEASURES AS SHOWN. CLEAN ACCUMULATED SEDIMENT AS NECESSARY. LEAVE IN PLACE UNTIL DISTURBED AREAS HAVE BEEN ADEQUATELY STABILIZED. DISTURBED AREAS RESULTING FROM SILT FENCE REMOVAL SHALL BE PERMANENTLY SEEDED.
7. ALL DISTURBED AREAS SHALL HAVE TEMPORARY STABILIZATION MEASURES IN PLACE WITHIN 48 HOURS OF INITIAL DISTURBANCE, AND PERMANENT STABILIZATION MEASURES WITHIN 48 HOURS OF FINAL GRADING.
8. CUT AND FILL SLOPES MAY CALL FOR INTENSIVE EROSION CONTROL MEASURES. MULCH NETTING OR EROSION CONTROL BLANKETS SHALL BE INSTALLED ON ALL SLOPES 3:1 AND STEEPER.
9. MAINTENANCE: DURING THE CONSTRUCTION PERIOD UNTIL SUCH TIME AS LONG TERM VEGETATION IS ESTABLISHED.
   A. DISTURBED AREAS WILL BE FERTILIZED AND RESEEDED.
   B. CATCH BASINS WILL BE CHECKED AND CLEANED AS NECESSARY.
   C. DRAINAGE SWALES SHALL BE CHECKED FREQUENTLY AND CLEANED AS REQUIRED.
   D. THE SILT FENCES AND HAYBALE DIKES WILL BE CHECKED ON A REGULAR BASIS AND REPAIRED AS NECESSARY TO CORRECT ANY DAMAGE, DETERIORATION, AND SHORT CIRCUITING.
   E. THE BOTTOM OF SEDIMENT BASINS SHALL BE PERIODICALLY CLEANED, WITH THE SEDIMENT REMOVED TO A SECURE LOCATION.
   F. SEDIMENT DEPOSITS SHALL BE REMOVED AS NECESSARY.
10. EPSC PLAN MONITORING: THE ON-SITE COORDINATOR AND/OR EPSC PLAN MONITOR SHALL INSPECT THE SITE ON A REGULAR BASIS TO OBSERVE THE INSTALLATION AND MAINTENANCE OF EROSION AND SEDIMENT CONTROL PRACTICES. THE SITE EROSION CONTROLS SHALL BE INSPECTED ONCE EVERY 7 DAYS AND AFTER EVERY RAINFALL EVENT THAT RESULTS IN STORMWATER DISCHARGE OFF THE SITE.
11. AN AREA SHALL BE CONSIDERED STABLE IF ONE OF THE FOLLOWING HAS OCCURRED:
   A. BASE COURSE GRAVELS HAVE BEEN INSTALLED IN AREAS TO BE PAVED.
   B. A MINIMUM OF 85% VEGETATED GROWTH HAS BEEN ESTABLISHED.
   C. A MINIMUM OF 3" OF NON-EROSIVE MATERIAL SUCH AS STONE OR RIPRAP HAS BEEN INSTALLED; OR
   D. EROSION CONTROL BLANKETS HAVE BEEN PROPERLY INSTALLED.
12. WINTER CONSTRUCTION NOTES:
   A. ALL PROPOSED VEGETATED AREAS WHICH DO NOT EXHIBIT A MINIMUM OF 85% VEGETATIVE GROWTH BY OCTOBER 15TH, OR WHICH ARE DISTURBED AFTER OCTOBER 15TH, SHALL BE STABILIZED BY SEEDING AND INSTALLING EROSION CONTROL BLANKETS ON SLOPES GREATER THAN 3:1, AND SEEDING AND PLACING 3 TO 4 TONS OF MULCH PER ACRE, SECURED WITH ANCHORED NETTING, ELSEWHERE. THE INSTALLATION OF EROSION CONTROL BLANKETS OR MULCH NETTING SHALL OCCUR OVER ACCUMULATED SNOW OR ON FROZEN GROUND AND SHALL BE COMPLETED IN ADVANCE OF THAW OR SPRING MELT EVENTS;
   B. ALL DITCHES OR SWALES WHICH DO NOT EXHIBIT A MINIMUM OF 85% VEGETATIVE GROWTH BY OCTOBER 15TH, OR WHICH ARE DISTURBED AFTER OCTOBER 15TH, SHALL BE STABILIZED TEMPORARILY WITH STONE OR EROSION CONTROL BLANKETS APPROPRIATE FOR THE DESIGN FLOW CONDITIONS; AND
   C. AFTER NOVEMBER 15TH, INCOMPLETE ROAD OR PARKING SURFACES, WHERE WORK HAS STOPPED FOR THE WINTER SEASON, SHALL BE PROTECTED WITH A MINIMUM OF 3 INCHES OF CRUSHED STONE.
   D. FOR WORK AFTER OCTOBER 15TH: CONTRACTOR SHALL ADHERE TO "THE LOW RISK SITE HANDBOOK FOR EROSION PREVENTION AND SEDIMENT CONTROL" FOR ADDITIONAL WINTER CONSTRUCTION REQUIREMENTS.

CONSTRUCTION SEQUENCE

SEE SEPARATE EROSION PREVENTION AND SEDIMENT CONTROL PLAN NARRATIVE FOR DETAILED CONSTRUCTION SEQUENCING AND EROSION CONTROL MEASURES.

RISK EVALUATION – PROJECT SPECIFIC

IN THE EVENT THAT CHANGES ARE MADE PRIOR TO OR DURING CONSTRUCTION THAT RESULT IN THE DISTURBANCE OF ONE OR MORE ACRES, THE CONTRACTOR SHALL BE RESPONSIBLE FOR ADDITIONAL PERMITTING WITH VANR.

EROSION CONTROL SPECIAL NOTES:

1. SILT FENCE SHOWN ALONG TEMPORARY ACCESS ROADS AND STAGING AREAS ON PLAN FOR INDICATIVE PURPOSES ONLY, AND SHALL BE INSTALLED AS APPROPRIATE FOR FIELD CONDITIONS AND DOWN-GRADIENT OF DISTURBED AREAS. SILT FENCE SHALL ONLY BE INSTALLED PARALLEL TO SLOPE CONTOURS. WHERE THIS IS NOT POSSIBLE, RUNOFF FROM DISTURBED AREAS SHALL BE CONTAINED AND CONTROLLED USING DIVERSION SWALES WITH STONE CHECK DAMS, OR OTHER APPROVED EROSION CONTROL MEASURES.
2. IF TEMPORARY ACCESS PATHS ARE MODIFIED FROM LOCATIONS SHOWN ON THE APPROVED EPSC PLANS, ADDITIONAL REVIEW MAY BE NECESSARY WITH VTRANS TO APPROVE ALTERNATE ACCESS. CONTRACTOR SHALL BE RESPONSIBLE FOR ENSURING THAT THIS ADDITIONAL REVIEW IS COMPLETED PRIOR TO IMPLEMENTING CHANGES IN THE FIELD.
3. DISCHARGING DEWATERING FLOWS TO ALTERNATE LOCATIONS NOT SHOWN ON THE APPROVED EPSC PLANS MAY REQUIRE ADDITIONAL REVIEW BY VTRANS, AND CONTRACTOR SHALL BE RESPONSIBLE FOR ENSURING THAT THIS REVIEW IS COMPLETED PRIOR TO IMPLEMENTING FIELD CHANGES.
4. ALTERNATE DEWATERING DISCHARGE LOCATIONS SHALL REQUIRE USE OF A FILTER BAG AND/OR HOSE OUTLET PROTECTION, AT A MINIMUM, PRIOR TO DEWATERING.
5. DEWATERING FLOWS FROM AREAS OF EXCAVATION WITHIN STREAM CHANNEL, OR EXPOSED TO OTHER CONTAMINATION (E.G. – CONCRETE, GROUT) SHALL ONLY BE DISCHARGED INTO APPROVED SETTLING BASIN UNLESS AN ALTERNATE LOCATION WITH FILTER BAG AND/OR HOSE OUTLET PROTECTION IS APPROVED BY RESIDENT ENGINEER.
6. ALL DISTURBED AREAS SHALL BE RESTORED WITH LOAM, SEED AND MULCH, AT A MINIMUM. SLOPES STEEPER THAN 3:1 SHALL BE STABILIZED WITH TEMPORARY EROSION MATTING, OR EQUIVALENT GEOTEXTILE FABRIC, AS APPROVED BY RESIDENT ENGINEER.

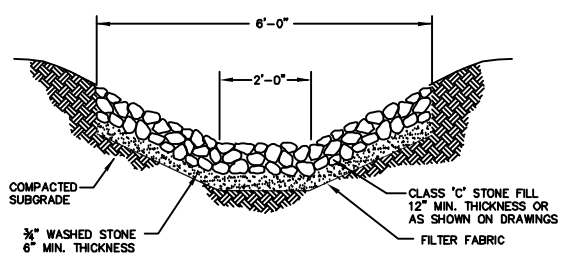

STONE LINED DITCH
N.T.S.

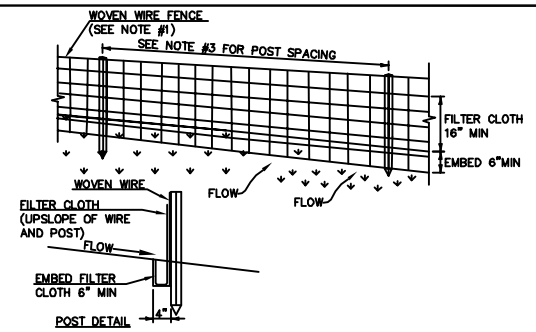

CONSTRUCTION SPECIFICATIONS

1. WOVEN WIRE REINFORCED FENCE IS REQUIRED WITHIN 100' UPSLOPE OF RECEIVING WATERS WHEN THE PROJECT FALLS UNDER A CONSTRUCTION STORMWATER PERMIT. WOVEN WIRE SHALL BE A MIN. 14 GAUGE WITH A 6" MAX. MESH OPENING.
2. FILTER CLOTH SHALL BE EITHER FILTER X, MIRAFI1100X, STABILINKA T140N OR APPROVED EQUIVALENT.
3. POST SPACING FOR WIRE-BACKED FENCE SHALL BE 10' MAXIMUM. FOR FILTER-CLOTH FENCE, WHEN ELONGATION IS >50%, POST SPACING SHALL NOT EXCEED 4' AND WHEN ELONGATION IS <50%, POST SPACING SHALL NOT EXCEED 6'.
4. WOVEN WIRE FENCE IS TO BE FASTENED SECURELY TO FENCE POSTS WITH WIRE TIES. FILTER CLOTH IS TO BE FASTENED SECURELY TO WOVEN WIRE FENCE WITH TIES SPACED EVERY 24" AT TOP AND MID SECTION.
5. WHEN TWO SECTIONS OF FILTER CLOTH ADJOIN EACH OTHER THEY SHALL BE OVERLAPPED BY 6" AND FOLDED.
6. PREFABRICATED UNITS SHALL BE GEOFAB, ENVIROFENCE, OR APPROVED EQUIVALENT.
7. MAINTENANCE SHALL BE PERFORMED AS NEEDED AND MATERIAL REMOVED WHEN SEDIMENT REACHES HALF OF FABRIC HEIGHT.

SILT FENCE
N.T.S.

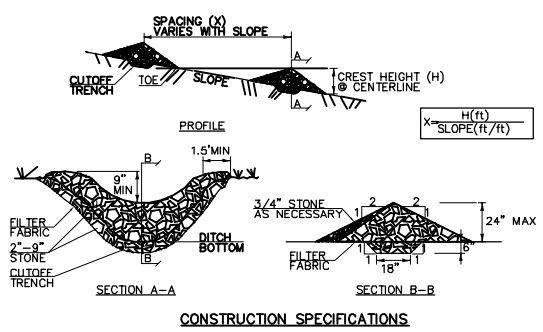

CONSTRUCTION SPECIFICATIONS

1. STONE WILL BE PLACED ON A FILTER FABRIC FOUNDATION.
2. CHECK DAMS SHALL BE SPACED SO THAT THE ELEVATION OF THE CREST OF THE DOWNSTREAM DAM IS AT THE SAME ELEVATION AS THE TOE OF THE UPSTREAM DAM.
3. 3/4" FILTERING STONE MAY BE ADDED TO THE FACE OF THE CHECK DAM AS NECESSARY.
4. EXTEND THE STONE A MINIMUM OF 1.5 FEET BEYOND THE DITCH BANKS TO PREVENT CUTTING AROUND THE DAM.
5. PROTECT CHANNEL DOWNSTREAM OF THE LOWEST CHECK DAM FROM SCOUR AND EROSION WITH STONE OR LINER AS APPROPRIATE.
6. ENSURE THAT CHANNEL APPURTENANCES SUCH AS CULVERT ENTRANCES BELOW CHECK DAMS ARE NOT SUBJECT TO DAMAGE OR BLOCKAGE FROM DISPLACED STONE.
7. MAXIMUM DRAINAGE AREA 2 ACRES.

CHECK DAM
N.T.S.

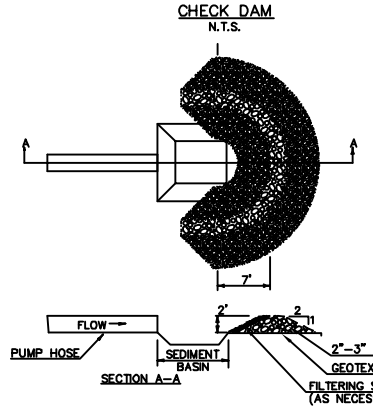

CONSTRUCTION SPECIFICATIONS

1. USE 2" TO 3" STONE. FILTERING STONE SHALL BE 3/4".
2. PLACE STONE OVER GEOTEXTILE.
3. ONCE PUMPING IS COMPLETE FOR THE PROJECT, THE SEDIMENT TRAPPED BEHIND THE DAM SHALL BE DISPOSED OF IN AN APPROVED WASTE AREA.
4. THE CHECK DAM(S) SHALL BE REMOVED AND THE AREA STABILIZED AND RESTORED TO NEAR PRE-CONSTRUCTION CONDITION.

HOSE OUTLET PROTECTION
N.T.S.

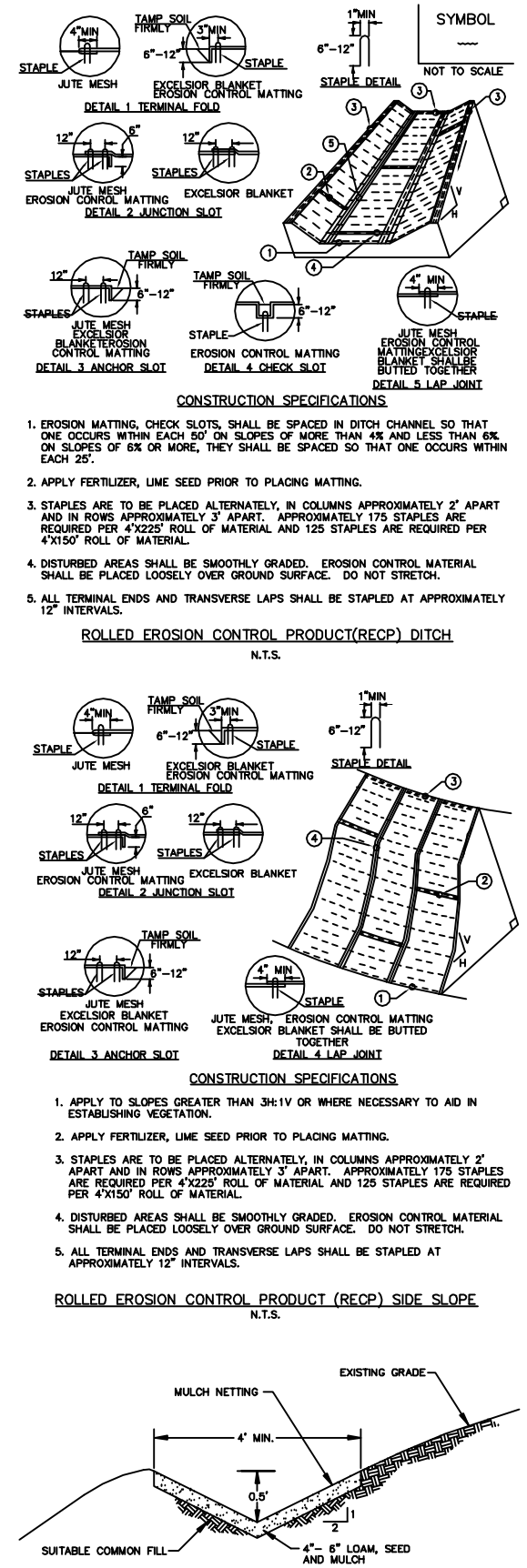

CONSTRUCTION SPECIFICATIONS

1. EROSION MATTING, CHECK SLOTS, SHALL BE SPACED IN DITCH CHANNEL SO THAT ONE OCCURS WITHIN EACH 50' ON SLOPES OF MORE THAN 4% AND LESS THAN 6%. ON SLOPES OF 6% OR MORE, THEY SHALL BE SPACED SO THAT ONE OCCURS WITHIN EACH 25'.
2. APPLY FERTILIZER, LIME SEED PRIOR TO PLACING MATTING.
3. STAPLES ARE TO BE PLACED ALTERNATELY, IN COLUMNS APPROXIMATELY 2' APART AND IN ROWS APPROXIMATELY 3' APART. APPROXIMATELY 175 STAPLES ARE REQUIRED PER 4'X225' ROLL OF MATERIAL AND 125 STAPLES ARE REQUIRED PER 4'X150' ROLL OF MATERIAL.
4. DISTURBED AREAS SHALL BE SMOOTHLY GRADED. EROSION CONTROL MATERIAL SHALL BE PLACED LOOSELY OVER GROUND SURFACE. DO NOT STRETCH.
5. ALL TERMINAL ENDS AND TRANSVERSE LAPS SHALL BE STAPLED AT APPROXIMATELY 12" INTERVALS.

ROLLED EROSION CONTROL PRODUCT(RECP) DITCH
N.T.S.

CONSTRUCTION SPECIFICATIONS

1. APPLY TO SLOPES GREATER THAN 3H:1V OR WHERE NECESSARY TO AID IN ESTABLISHING VEGETATION.
2. APPLY FERTILIZER, LIME SEED PRIOR TO PLACING MATTING.
3. STAPLES ARE TO BE PLACED ALTERNATELY, IN COLUMNS APPROXIMATELY 2' APART AND IN ROWS APPROXIMATELY 3' APART. APPROXIMATELY 175 STAPLES ARE REQUIRED PER 4'X225' ROLL OF MATERIAL AND 125 STAPLES ARE REQUIRED PER 4'X150' ROLL OF MATERIAL.
4. DISTURBED AREAS SHALL BE SMOOTHLY GRADED. EROSION CONTROL MATERIAL SHALL BE PLACED LOOSELY OVER GROUND SURFACE. DO NOT STRETCH.
5. ALL TERMINAL ENDS AND TRANSVERSE LAPS SHALL BE STAPLED AT APPROXIMATELY 12" INTERVALS.

ROLLED EROSION CONTROL PRODUCT (RECP) SIDE SLOPE
N.T.S.

DIVERSION DITCH
N.T.S.

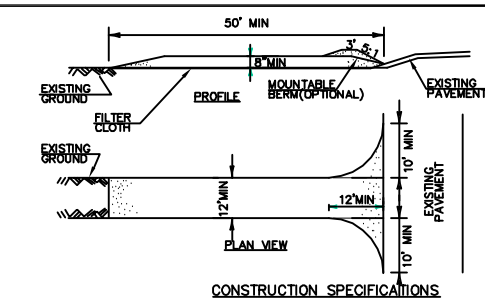

CONSTRUCTION SPECIFICATIONS

1. STONE SIZE– USE 1-4" STONE, RECLAIMED OR RECYCLED CONCRETE EQUIVALENT.
2. LENGTH– NOT LESS THAN 50' (EXCEPT ON A SINGLE RESIDENCE LOT WHERE A 30' MINIMUM LENGTH APPLIES).
3. THICKNESS– NOT LESS THAN 8".
4. WIDTH– 12' MINIMUM, BUT NOT LESS THAN THE FULL WIDTH AT POINTS WHERE INGRESS OR EGRESS OCCURS. 24' IF SINGLE ENTRANCE TO SITE.
5. GEOTEXTILE MUST BE PLACED OVER THE ENTIRE AREA PRIOR TO PLACING STONE.
6. SURFACE WATER– ALL SURFACE WATER FLOWING OR DIVERTED TOWARD CONSTRUCTION ENTRANCES SHALL BE PIPED BENEATH THE ENTRANCE. IF PIPING IS IMPRACTICAL, A MOUNTABLE BERM WITH 5:1 SLOPES WILL BE PERMITTED.
7. MAINTENANCE– THE ENTRANCE SHALL BE MAINTAINED IN A CONDITION WHICH WILL PREVENT TRACKING OR FLOWING OF SEDIMENT ONTO PUBLIC RIGHTS-OF-WAY, ALL SEDIMENT SPILLED, DROPPED, WASHED OR TRACKED ONTO PUBLIC RIGHTS-OF-WAY MUST BE REMOVED IMMEDIATELY.
8. WHEN WASHING IS REQUIRED, IT SHALL BE DONE ON AN AREA STABILIZED WITH STONE AND WHICH DRAINS INTO AN APPROVED SEDIMENT TRAPPING DEVICE.
9. PERIODIC INSPECTION AND NEEDED MAINTENANCE SHALL BE PROVIDED ACCORDING TO PERMIT REQUIREMENTS.

STABILIZED CONSTRUCTION ENTRANCE
N.T.S.

VAOT RURAL AREA MIX

LBS/AC					
% WEIGHT	BROADCAST	HYDROSEED	NAME	GERM %	PURITY %
27.5%	22.5	45	CREEPING RED FESCUE	85%	98%
27.5%	22.5	45	TALL FESCUE	90%	85%
5.0%	3	6	RED TOP	80%	85%
15.0%	9	18	BIRDSFOOT TREFOIL	85%	98%
5.0%	3	6	ANNUAL RYE GRASS	85%	85%
100%	60	120			

VAOT URBAN AREA MIX

LBS/AC					
% WEIGHT	BROADCAST	HYDROSEED	NAME	GERM %	PURITY %
42.5%	34	68	CREEPING RED FESCUE	85%	98%
10.0%	8	16	PERENNIAL RYE GRASS	90%	95%
42.5%	34	68	KENTUCKY BLUE GRASS	85%	85%
5.0%	4	8	ANNUAL RYE GRASS	85%	95%
100%	80	160			

SOIL AMENDMENT GUIDANCE

FERTILIZER		LIME	
BROADCAST	HYDROSEED	BROADCAST	HYDROSEED
10-20-10	*FOLLOW*	PELLETIZED	*FOLLOW*
500 LBS/AC	*MANUFACTURER*	2 TONS/AC	*MANUFACTURER*

CONSTRUCTION GUIDANCE

1. RURAL SEED MIXES USE AS INDICATED IN THE PLANS AND/OR FOR ALL ESTABLISHED UPLAND NON WETLAND AREAS DISTURBED BY THE CONTRACTOR.
2. URBAN SEED MIXES USE AS INDICATED IN THE PLANS AND/OR FOR ALL ESTABLISHED LAWN AREAS DISTURBED BY THE CONTRACTOR.
3. ALL SEED MIXTURES SHALL NOT HAVE A WEED CONTENT EXCEEDING 0.40% BY WEIGHT AND SHALL BE FREE OF ALL NOXIOUS SEEDS.
4. FERTILIZER AND LIMESTONE: SHALL FOLLOW RATES SHOWN ON PLAN OR AS DIRECTED BY THE ENGINEER
5. HAY MULCH: TO BE PLACED ON EARTH SLOPES AT THE RATE OF 2 TONS/ACRE, ACHIEVE 90% GROUND COVER OR AS DIRECTED BY THE ENGINEER.
6. TOPSOIL: TO BE USED WITH SEED AS INDICATED ON THE PLANS, OR AS DIRECTED BY THE ENGINEER.
7. HYDROSEEDING: ALTHOUGH GUIDANCE IS GIVEN ABOVE THE SITE CONDITIONS AND THE TYPE OF HYDROSEED WILL ULTIMATELY DICTATE THE AMOUNTS AND TYPES OF SOIL AMENDMENTS TO BE APPLIED
8. TURF ESTABLISHMENT: PLACING SEED, FERTILIZER, LIME AND MULCH PRIOR TO SEPTEMBER 15 AND AFTER APRIL 15 CAN BETTER ENSURE A VIGOROUS GROWTH OF GRASS.

ADAPTED FROM VTRANS TECHNICAL LANDSCAPE MANUAL FOR ROADWAYS AND TRANSPORTATION FACILITIES

TURF ESTABLISHMENT

REVISIONS	
MAY 24, 2005	WRF
JANUARY 16, 2010	WRF
FEBRUARY 18, 2011	WRF

TURF ESTABLISHMENT
N.T.S.

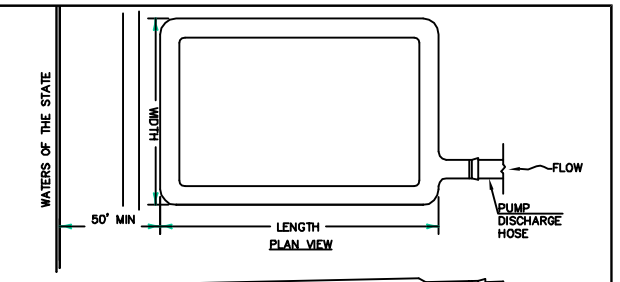

CONSTRUCTION SPECIFICATIONS

1. THE PRIMARY PURPOSE OF FILTER BAG IS TO RETAIN SILT, SAND, AND FINES DURING DEWATERING OPERATIONS.
2. FILTER BAGS SHALL BE INSTALLED ON A VEGETATED SLOPE GRADED TO ALLOW INCOMING WATER TO FLOW THROUGH THE BAG.
3. FILTER BAGS MAY ALSO BE PLACED ON COARSE AGGREGATE, STONE, OR HAYBALES TO INCREASE FILTRATION EFFICIENCY.
4. FILTER BAGS SHALL BE LOCATED A MINIMUM OF 50' FROM WATERS OF THE STATE UNLESS OTHERWISE APPROVED BY THE ENGINEER.
5. THE NECK OF THE FILTER BAG SHALL BE STRAPPED TIGHTLY TO THE DISCHARGE HOSE.
6. A FILTER BAG IS FULL WHEN IT NO LONGER CAN EFFICIENTLY FILTER SEDIMENT OR ALLOW WATER TO PASS AT A REASONABLE RATE.
7. FILTER BAG SHALL BE DISPOSED OF AS APPROVED IN THE EPSC PLAN OR AS DIRECTED BY THE ENGINEER.

FILTER BAG
N.T.S.

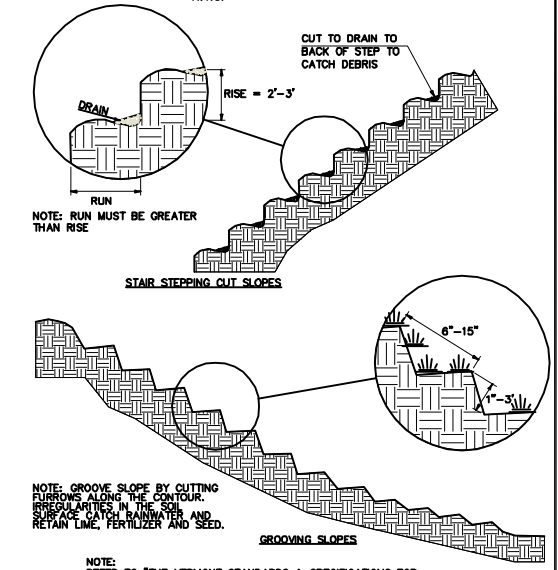

NOTE:
REFER TO "THE VERMONT STANDARDS & SPECIFICATIONS FOR EROSION PREVENTION & SEDIMENT CONTROL –2006– " FROM THE VT AGENCY OF NATURAL RESOURCES FOR ADDITIONAL GUIDANCE.

SURFACE ROUGHENING DETAILS*
N.T.S.

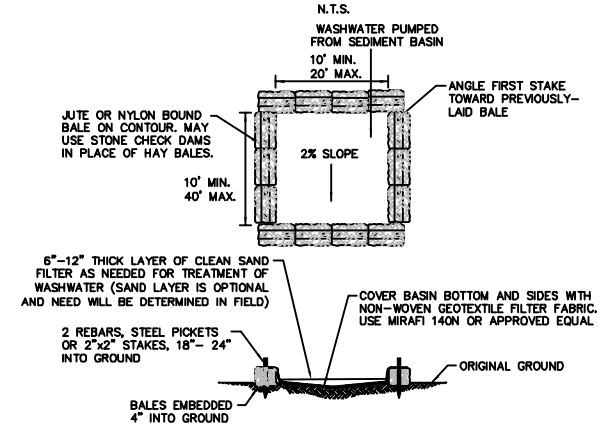

NOTE:
1. GOAL IS FOR ALL CONTAMINATED WATER TO FLOW THROUGH NON-WOVEN FABRIC, AND SAND LAYER AS DEEMED NECESSARY, PRIOR TO EXITING BASIN.
2. BASIN SIZE TO VARY BASED ON EXPECTED VOLUME OF WASHWATER, BUT SHOULD NOT EXCEED LIMITS INDICATED ABOVE.
3. CONTRACTOR MAY USE MULTIPLE CELLS TO INCREASE TREATMENT CAPACITY.
4. DETAIL AS SHOWN IS INTENDED TO PROMOTE INFILTRATION INTO GROUND BELOW BASIN. WHERE INFILTRATION IS NOT DESIRED DUE TO UNSUITABLE SOIL CONDITIONS, CLOSE PROXIMITY TO SENSITIVE RESOURCES, OR OTHER CONDITIONS, CONTRACTOR SHALL USE IMPERVIOUS PLASTIC LINER ON BOTTOM AND THREE SIDES WITH NON-WOVEN FABRIC ON DOWNGRADIENT END TO ALLOW WATER TO EXIT BASIN IN DESIRED DIRECTION AWAY FROM SENSITIVE RESOURCES.

ALTERNATE TREATMENT BASIN FOR DEWATERING
N.T.S.

REVISION NO.	DATE	DESCRIPTION	MADE BY	CHECKED BY	APPROVED BY

BRIDGE NO. 13 – EROSION PREVENTION AND SEDIMENT CONTROL DETAILS FOR W.M. SCHULTZ CONSTRUCTION, INC FOR

VERMONT AGENCY OF TRANSPORTATION - ROCHESTER ER STP 0162 (19)

VERMONT ROUTE 73, ROCHESTER, VERMONT

PATHWAYS CONSULTING, LLC
240 MECHANIC STREET, SUITE 100
LEBANON, NEW HAMPSHIRE 03766
(603) 448-2200

SCALE: 1"= AS NOTED	3
DESIGNED BY: SAW	
DRAWN BY: SAW	
CHECKED BY: SAW	
DATE: 08/01/14	
PROJ. NO. 12455	SHEET 3 OF 3

Erosion Prevention and Sediment Control (EPSC)
and
Temporary Stream Diversion Plan

For

State of Vermont Agency of Transportation (VTrans)
Rochester ER STP 0162 (19) - Bridge 13
Rochester, Vermont

Contractor and EPSC Contact:

W.M. Schultz Construction, Inc.
Post Office Box 2620
Ballston Spa, New York 12020
Phone: (518) 885-0060
Fax: (518) 885-0744

EPSC Plan Preparation Date:

August 1, 2014

Estimated Project Dates:
Project Start Date: August 11, 2014
Project Completion Date: October 31, 2014

DRAFT

Project No. 12455

Prepared By:

PATHWAYS CONSULTING, LLC
Planning • Civil & Environmental Engineering • Surveying • Construction Assistance
240 Mechanic Street • Suite 100
Lebanon, New Hampshire 03766
(603) 448-2200 • Fax: (603) 448-1221 • www.pathwaysconsult.com

TABLE OF CONTENTS

Page No.

1.0: EROSION PREVENTION AND SEDIMENT CONTROL NARRATIVE 1

1.1 Project Description.....1
1.2 Site Inventory.....1
1.3 Risk Evaluation.....1
1.4 Erosion Prevention and Sediment Control.....1
1.5 Sequence and Staging 2
1.6 Contact Information/Responsible Parties 12
1.7 Schedule.....13
1.8 Inspection Form 13

2.0: EROSION PREVENTION AND SEDIMENT CONTROL PLANS 14

APPENDICES

Appendix A Site Location Map
Appendix B EPSC Plans
Appendix C Inspection Form
Appendix D Off-Site Activity Records
Appendix E EPSC Plan Revision Documentation Form
Appendix F Notice of Intent

1.0 EROSION PREVENTION AND SEDIMENT CONTROL NARRATIVE

1.1 Project Description

See Sheet 53 of the Contract Plans for information related to the project description prepared for the Vermont Agency of Transportation (VTrans) for this project.

1.2 Site Inventory

See Sheet 53 of the Contract Plans for information related to the site inventory, such as drainage characteristics, vegetation, soils, and sensitive areas, prepared for VTrans for this project.

1.3 Risk Evaluation

The original risk evaluation on Sheet 53 is no longer valid due to additional impacts requested by the Contractor for staging and access during construction, as depicted on the enclosed EPSC Plans. While the impacts for the original project design were less than one acre (0.70 acres), the additional disturbances will exceed one acre (1.95 acres). Therefore, the project requires coverage under Vermont Agency of Natural Resources (VANR) Construction General Permit No. 3-9020 for Low Risk Sites. The Contractor has already filed a Notice of Intent (NOI) No. 7240-9020 that was authorized on July 28, 2014 and copies of these materials have been provided in Appendix F of this EPSC Plan.

1.4 Erosion Prevention and Sediment Control

See Sheets 53 to 58 of the Contract Plans for information related to general erosion prevention and sediment controls and typical details prepared for VTrans for this project. Please also refer to the VANR "Low Risk Site Handbook for Erosion Prevention and Sediment Control," dated August 2006, which is considered part of this EPSC Plan.

Section 1.5 provides a detailed construction sequence that identifies the type of work activity to be performed, the specific earth disturbances to be addressed, and specific erosion control measures (relating to the typical measures discussed on Sheets 53 to 58 of the Contract Plans) that will be implemented during each respective stage of work to prevent erosion, control sediment transport, and achieve timely stabilization of disturbed areas.

See also Appendix B for updated EPSC Plans that include detailed site-specific information provided by the Contractor to supplement the general EPSC Plan information provided in the Contract Plans, and document and address construction activities and related erosion and sediment controls to be implemented during construction.

The proposed culvert location, staging, access and other specific information was provided by the Contractor. The contractor has also provided a detailed submittal, entitled "Water Control Plan, Bridge 13" prepared by TAW Associates, dated

July 28, 2014, that provides details on the proposed cofferdam stream diversion design, and equipment and materials to be used for dewatering from the area contained by the cofferdam. The EPSC plans were based on this submittal, and should be updated in the event that any changes are made to this approach.

1.5 Sequence and Staging

General Construction Scope: The work related to this project involves the removal and replacement of an existing 10-foot diameter corrugated metal pipe culvert (bridge #13) on Vermont (VT) Route 73 over the Brandon Brook in Rochester, VT, as depicted on the Site Location Map provided in Appendix A. The project involves installation of a new precast concrete frame or arch type structure with an 8-foot rise and spanning 28 feet. The project also includes removal of the existing culvert, stream channel and bank stabilization, and approximately 275 feet of roadway work on VT Route 73. The new bridge will be installed on new footings along the same alignment. The project also includes temporary traffic controls, temporary access and staging areas near the work areas, roadway approach work, stone fill along the stream channel bed and banks, earthwork, stream diversion measures, erosion and sediment controls, and site restoration.

Construction Sequencing: It is anticipated that the construction activities at the site will be phased with the necessary erosion and sediment controls in order to minimize disturbance of Brandon Brook and the surrounding areas. During removal of the existing culvert and installation of the new bridge structure, traffic flow through the work area along VT Route 73 will be eliminated through a limited duration road closure. During initial mobilization to the site and once the new bridge is in place, impacts to normal traffic flow through the work areas will be minimized with temporary single-lane closures with appropriate traffic controls. Project phasing will also minimize the duration of exposed soil and the amount of soil that is exposed to the elements at any given time. Although most of the site disturbances will likely take place concurrently during the short duration of the allowable road closure, this will also reduce the overall duration of the project and limit the time of exposure for disturbed areas.

Work will be sequenced in two separate phases according to the major work phases and necessary traffic patterns identified by the Contractor, as summarized below:

- Phase 1 - During this phase, traffic on VT Route 73 will be rerouted via an off-site detour to allow a limited duration road closure while the removal of the existing culvert and installation of the new bridge are completed.
- Phase 2 - Once phase 1 has been completed, traffic will resume on VT Route 73 over the new bridge. During this phase, traffic will be controlled within the project site using temporary single-lane closures while final roadway, stream channel, bank stabilization and site restoration measures are completed around the new bridge. Upon completion of this phase, traffic will resume on VT Route 73.

Stream Diversion Sequencing: Various stream diversion and dewatering measures will be utilized, as described in the Water Control Plan document (prepared by TAW Associates) and depicted on the enclosed EPSC Plans, to provide a semi-dry working condition within the brook during culvert removal and bridge replacement. A sandbag cofferdam will be installed in the brook upstream and downstream of the crossing. Flows will be diverted around the work area into the channel downstream of all disturbances using a by-pass pumping system and discharge hose extending around the south end of the site and across the roadway east of the crossing. A separate dewatering sump and pumping system will also be utilized to lower the water level within the cofferdams during culvert removal and bridge construction, and this flow will be discharged to an upland treatment area located on the northwest side of the project site. The treatment area will be located above the top of bank and as far from surface waters as possible. A geotextile filter curtain (a.k.a. tubidity barrier) may be necessary along the downstream side of the downstream cofferdam to control sediment leakage through the cofferdam, depending on how well the cofferdam is sealed on the inside. Culvert removal and bridge work within the cofferdam containment area will be completed in one phase, with work taking place simultaneously on the north and south sides of VT Route 73. Once the bridge substructures (footings and pedestal walls) have been installed and prior to the bridge superstructure installation, stone fill will be placed on the stream banks under the bridge. Temporary access and staging will be possible from the existing roadway on each side of the bridge during the work period, as well as from temporary off-site staging and access areas on each side of the crossing.

The Contactor has obtained authorization to utilize off-site properties on the north and south side of the project area for temporary access and staging. Due to the difficult topography on both sides of the stream channel and roadway, significant grading will be required on this property in order to excavate to the footing depth on each side of the new bridge structure. Additional temporary erosion controls and stabilization (i.e., crushed stone, erosion blankets, stone check dams, silt fence, etc.) will be installed in these areas, as detailed in the EPSC Plans. Once the new bridge has been completed, all disturbed areas will be restored to the previously existing condition and fully stabilized.

Overall Project Phasing: The overall project phasing will be as follows:

1. Mobilization to the site, setup field office, and other facilities.
2. Establish construction limits and permitted impact areas.
3. Setup traffic controls on VT Route 73.
4. Establish site construction access (stabilized construction entrances).
5. Establish perimeter erosion controls.
6. Establish temporary access and staging areas.
7. Tree clearing, as needed.
8. Setup Phase 1 off-site detour and traffic controls for full road closure along VT Route 73.
9. Install cofferdam stream diversion (including downstream filter curtain, as necessary).
10. Install cofferdam by-passing and dewatering sump and pump systems.
11. Install dewatering treatment measures.

12. Complete culvert removal and related stream channel excavation.
13. Complete bridge structure installation including excavation, foundation and backfill.
14. Complete stone fill and riprap around bridge foundation.
15. Restoration of stream channel and banks within cofferdam area (may follow bridge completion as determined by contractor).
16. Complete bridge superstructure installation, backfill, roadway and embankment work.
17. Remove Phase 1 traffic controls (full road closure)
18. Setup Phase 2 traffic controls (single-lane road closures).
19. Removal of cofferdam stream diversion and dewatering measures (may follow bridge completion as determined by contractor).
20. Complete all remaining roadway, shoulder, and guardrail work.
21. Removal of temporary access and staging areas.
22. Final stabilization, general site restoration and demobilization.

Within each work phase, it is important to limit the area of disturbance to locations where construction activities are underway and stabilize them as quickly as possible. The construction activities will be sequenced according to the construction sequencing provided below to minimize the duration and area of exposed soils within the limits of disturbance and to allow for efficient completion of work. Some variation in the sequence of construction activities and erosion control measures may eventually be necessary at each work area, depending on the specific site conditions and progress of work. In this case, the EPSC Plans and narrative will be updated by the Contractor as necessary to document these changes for the project site and specific activities.

The intended construction sequence is as follows:

1. **Pre-Construction Meeting:** Conduct a pre-construction meeting, which should include the Contractor, the VTrans Resident Engineer, the construction environmental engineer, and any other parties deemed necessary.

2. **Clearing Limits:** Flag all clearing limits with survey tape where tree or vegetation removal will be necessary.

3. **Wetland Limits:** Flag all wetland areas, including top of stream bank, with survey tape within project limits.

4. **Limits of Construction:** Install project demarcation fencing to delineate the limits of construction, which the Contractor will access with vehicles or equipment, or disturb during completion of all required work. This task shall include clearly delineating jurisdictional wetland areas that are permitted for disturbance or to remain undisturbed. Project demarcation fencing will generally be installed along the top of slopes above areas of excavation or to cordon off areas and to prevent access during unsafe working conditions.

5. **Traffic Controls:** Install all necessary traffic controls along VT Route 73 per the Contract Plans and the VTrans requirements. Temporary traffic controls are anticipated to include separate temporary traffic barricades, jersey barriers, signalization warning signage, and markings, for each of the traffic control Phases 1 and 2 outlined above. Additional temporary traffic controls will be necessary during the limited duration road closure and off-site detour for culvert removal and bridge installation. Separate traffic controls may also be necessary during short-term lane closures during activities such as mobilization and demobilization, installation of the stabilized construction entrances, installation of temporary facilities, roadway work within the right-of-way, material deliveries, or movement of equipment and vehicles. This access may vary during the progress of work depending on the side of the road that will be closed off, and the requirement to maintain thru-lanes for one-way or two-way traffic.

6. **Perimeter Controls:** Install silt fence perimeter controls at the limit of disturbance. This task will include, at a minimum, a line of silt fence down-gradient of all temporary or permanent disturbances within the project limits, as shown on the EPSC Plans for each project phase. Additional silt fence will also be installed along the top of the river banks, at the top of slopes above areas of excavation, at the toe of graded slopes, limits of work, or other areas as necessary to control erosion and prevent sediment from impacting adjacent undisturbed areas and surface waters. Silt fence may also be needed down-gradient of temporary travelways and access roads, since significant grading and surface disturbances are possible during access road and staging area setup and usage. Silt fence will be installed parallel with the existing contours and where appropriate to protect downstream undisturbed areas.

7. **Tree Clearing:** Clear all trees and significant vegetation, in accordance with the project clearing limits or as directed by the Resident Engineer, within previously flagged or fenced construction limits, and simultaneously install temporary stabilization measures, including temporary seed and mulch, wood chips, and/or crushed stone on disturbed areas. All disturbed slopes steeper than 3:1 will be protected with temporary erosion matting, where necessary.

8. **Stabilized Construction Entrances:** Grade and install stabilized construction entrances on each side of the work area, as shown on EPSC Plans. Since VT Route 73 is a paved roadway, stabilized construction entrances may only be required where the existing pavement and subbase materials have been removed, or during initial work to install the new bridge and roadway approaches. Stabilized construction entrances may only require short tracking pads where temporary access roads meet existing pavement as necessary to control tracking of sediment beyond the work areas, and to assist with dust control on each end of the work area. Full-length stabilized construction entrances may not be needed in most cases, and will be determined in the field. Some form of stabilized construction entrance or tracking pad is anticipated for temporary access and staging on each side of the work areas. Stabilized construction

entrances may also be needed at points of access to off-site staging areas. Adequate traffic controls shall be in place along VT Route 73 in the vicinity prior to installing and using the stabilized construction entrances.

9. **Temporary Construction Access and Staging Areas (Phase 1):** Temporary construction access roads and staging areas are anticipated during Phase 1 for accessing the bridge work areas from either VT Route 73 or the off-site staging areas adjacent to the site, as shown on the EPSC Plans. All necessary temporary stabilization, erosion controls, and surface runoff measures shall be installed simultaneously with grading activities to prevent erosion on disturbed areas, contain sediment, and convey stormwater through the disturbed areas, especially in any areas of concentrated drainage. This process may include, in addition to perimeter controls already installed, diversion and stone-lined swales, stone check dams, temporary erosion matting on slopes, water bars, and temporary mulch. Where difficult or unsuitable soil conditions (wet, soft, etc.) are encountered within access roads or staging areas, temporary surface stabilization may require an application of crushed stone placed on geotextile fabric, as directed by the Resident Engineer. Stone fill or existing stone materials from areas to be excavated may be utilized for creating level staging pads adjacent to the work areas, if approved by the Resident Engineer.

***Temporary Access Roads*:** Where temporary access roads have to be benched into the existing slopes, stormwater runoff from up-gradient areas may concentrate along the perimeter silt fence at the toe of slope, and a temporary diversion ditch may be necessary along this silt fence to convey drainage to a discharge point into the existing stream channel. Stone check dams and/or stone lining shall be installed along the silt fence as necessary to control flow velocity, contain sediment, and limit turbidity at the discharge point. Temporary erosion matting shall be installed on all cut and fill slopes steeper than 3:1 within 48 hours of slope grading and prior to any rain events. Water bars may be installed along the surface of the access road at 50-foot intervals as necessary to control runoff. All related erosion controls shall be in place prior to utilizing access roads. Any portion of the access roads that are installed below the ordinary high water level of surface waters shall consist of clean stone fill with minimal fine materials. Geotextile filter fabric is also recommended below any stone fill that is placed in surface waters to minimize impacts to existing vegetation and river bed materials.

***Staging and Stockpiling*:** Where additional staging areas are located outside immediate work areas, such as on level terrain within the right-of-way (ROW), within lane closures, or on off-site areas, additional surface water, or erosion controls are required as the specific field conditions dictate. Earth stockpiles shall be temporarily stabilized with seed and mulch if the duration of exposure is expected to be greater than 14 days. Silt fence shall be placed on the down-gradient side only if necessary to contain stockpiled materials and prevent sediment from being washed into the existing ditches, stream, or onto undisturbed areas. The Contractor

may utilize temporary lane closures along roads adjacent to the work areas for equipment or material delivery, such as concrete trucks, if approved by the Resident Engineer.

***Off-Site Staging and Disposal Area*:** Activities that will take place at approved off-site areas shall adhere to all applicable erosion and sediment control requirements contained in this EPSC Plan, property owner requirements, and other applicable requirements contained in the VTrans approval of this area. This may include installation of stabilized construction entrances, site perimeter controls, perimeter controls around stockpile areas, and stabilization measures, where necessary, at the off-site locations, as determined in the field. The off-site areas shall also be monitored in conjunction with on-site areas for the entire duration of usage and until all disturbed areas have been fully stabilized.

10. **Cofferdam and Stream Diversion Measures:** Setup stream diversion measures for each respective work phase (Phase 1) prior to any disturbances to the streambed or banks in accordance with the approved EPSC Plan and Water Control Plan submittal. This task will include two separate sand bag cofferdams on the north (downstream) and south (upstream) sides of the existing culvert crossing, a by-passing pumping system, a dewatering sump and pump system and associated treatment measures, and turbidity barriers, as detailed on the EPSC Plans.

***Cofferdam Construction*:** The cofferdams shall be installed at the upstream and downstream limit of disturbance in the brook. The cofferdams shall be tied into the banks of the brook at each end to prevent stream flow into the contained work areas and limit leakage out of the containment areas. The cofferdams shall be lined with 6 mil polyethylene sheeting on the inside and/or outside faces to limit leakage and transport of fine sediments into and out of the containment area. A geotextile filter curtain (a.k.a. turbidity barrier) may be needed north of the downstream cofferdam in the existing stream channel to contain sediment leakage from the containment area and associated disturbances, and should remain in place until the cofferdam is removed, stone fill bank stabilization is installed and all other disturbed areas are fully stabilized.

By-pass Pumping System: The intention is to create a semi-dry working area in the brook during culvert removal, bridge installation and stream channel stabilization activities. A by-pass pumping system consisting of one 12" pump will be utilized to divert stream flows around the cofferdam containment area into the existing channel downstream of the work areas. This by-pass pumping system will include a sump placed directly in the undisturbed brook upstream of the south cofferdam, and discharge hose extending around the southeast side of the site to a discharge point downstream of the north cofferdam. The discharge pipe will be installed through a temporary sleeve beneath the roadway at approximate Sta. 123+50. The diversion system will also include a stand-by back-up sump and pump system (two 12" pumps with separate discharge lines) as needed to accommodate increased flows in the brook that may occur during

periods of precipitation that could potentially exceed the capacity of the by-pass pipe.

***Containment Area Dewatering*:** The cofferdam containment areas will be dewatered as necessary by a separate dewatering sump and pump system with dewatering treatment measures located on the upland, as detailed on the EPSC Plans. The dewatering sump within the containment area is intended to maintain semi-dry working conditions during culvert removal, bridge installation and backfill, to limit the amount of sediment and turbid water conveyed from the containment to the dewatering treatment area, and prevent the discharge of sediment and turbidity to the downstream surface waters. It is critical that the Contractor maintains the sump and pump system constantly to ensure that the suction intake is flowing clearly, not clogged, and functioning as intended. The discharge hose extending to the dewatering treatment area should be adequately supported as necessary to prevent shifting or separation at the pipe joints, or any unexpected discharge outside the contained areas.

Dewatering Treatment: The dewatering treatment areas will consist of, at a minimum, a filter bag fitted to the end of the pump discharge hose, to remove sediment and turbidity prior to discharge back into the brook via existing swales and overland flow. The approximate location of the dewatering area has been depicted on the EPSC Plans, but may need to be adjusted in the field to ensure that discharge will flow away from the cofferdam containment area and active work areas. Dewatering treatment measures shall be adequately sized to handle potential flow volumes expected from dewatering activities, and may require additional treatment measures if sediment and turbidity is not adequately removed. Additional erosion, sediment, and turbidity control measures may be necessary to control the flow velocity, remove excess sediment not contained by the filter bag, and limit turbidity from being discharged onto adjacent areas or into nearby surface waters. Additional measures may include a stone check dam, stone and fabric check dam, stone lining installed along the down-gradient silt fence, erosion control matting or a dewatering treatment basin (hay bale or stone berm lined with fabric) as necessary to contain sediment and turbidity at the discharge point, and provide the necessary storage capacity to adequately treat and remove sediment and turbidity.

***Turbidity Barriers*:** Turbidity barriers may be necessary downstream of the cofferdam containment area if sediment and turbid water is not adequately controlled. Once installed this measure shall be maintained until the source of sediment or turbidity has been addressed. The turbidity barriers shall be adequately secured in a fixed position within the brook with anchors and lines as necessary to prevent excessive movement during varying flow levels and velocities. The turbidity barriers shall be long enough to extend from the water surface to the stream bed during normal high water conditions. It is critical that the Contractor maintains the turbidity barriers to ensure that they are functioning as intended, are

maintained in a relatively fixed position, do not collect excessive debris, and are repaired in the event of damage from debris or other causes.

General Measures: Throughout the duration of diversion and dewatering, the contractor shall verify the weather forecast and anticipate stream flow conditions that could impact the integrity and functionality of the cofferdam, by-pass pipe, back-up pump system and other dewatering measures.

Cofferdam stream diversion and dewatering measures shall remain in place and operational during the entire duration of the work, including culvert removal, bridge footing and foundation installation, and placement of stream restoration (stone fill) work until such time as the work below the ordinary high water line is complete, disturbed streambed and banks below the ordinary high water line are fully restored and stabilized, and potential sources of sediment or contamination have been eliminated. Once this condition is achieved, the cofferdam and dewatering system can be removed and stream flow will be allowed to continue through the work areas.

11. **Stream Channel and Bank Disturbances:** Prior to any disturbances within the brook channel and banks, cofferdams by-pass pumping and dewatering systems shall be in place around the work areas and functioning as intended. Excavated soil and stone materials shall be stockpiled in the construction staging areas for re-use or disposal, and shall only be placed in areas contained by adequate perimeter erosion and sediment controls.

12. **Bridge Removal and Replacement Work:** Complete culvert removal, excavation, and bridge installation work, as specified in the Contract Plans. Prior to any concrete work within the stream channel or on the stream banks, cofferdams, by-pass pumping and dewatering measures shall be in place and operating to limit water within the respective work areas and contain sediment and/or concrete contamination.

    During any concrete work, the Contractor shall also ensure that no excess grout, concrete, or associated washwater is allowed to pass into downstream surface waters during these operations. A separate dewatering sump and treatment measures may be needed around isolated areas during concrete work to prevent mixing of waters contaminated with concrete with other dewatering flows, as deemed necessary by the Resident Engineer.

    If any additional dewatering from areas contaminated with concrete is deemed necessary during concrete work, dewatering flows shall be pumped to a treatment basin, or a filter bag with additional treatment measures, since a filter bag alone is not typically adequate for removing the fine particles and turbidity associated with concrete contamination. A detail has been provided on Sheet 3 of the EPSC Plans in the event that this additional treatment measure is needed. The Contractor shall

continuously monitor the filter bag and/or treatment basin throughout the duration of these activities to ensure that adequate filtration is achieved, and that no untreated water escapes from these areas into the stream.

13. **Restoration of Cofferdam Areas:** The disturbed portion of stream bed and banks will be re-established to finished grades in accordance with the Contract Plans. Cofferdams, by-pass pumping and dewatering measures shall remain in place and functioning until finished grades have been achieved and all disturbed areas are stabilized.

    All disturbed surfaces in the stream and on the banks below the ordinary high water line shall be stabilized, per the Contract Plans or as directed by the Resident Engineer, with stone fill, permanent seed, and mulch, or erosion matting, where required for slopes steeper than 3:1 or where erosion, washout, or scouring may be a concern. Once this condition is achieved, the cofferdams, by-pass pumping and dewatering measures can be removed.

14. **Remaining Bridge and Roadway Work:** Complete all remaining bridge and roadway work, including bridge superstructure, backfill, approaches, subbase, pavement, shoulder, guardrail, drainage improvements, and other slope work. All disturbed areas within the work areas shall be contained with perimeter controls until all areas have been fully stabilized.

15. **Remove Temporary Access Roads and/or Staging Areas:** Remove all temporary construction access roads and staging areas once work is completed in these areas.

16. **Final Stabilization:** Install landscaping and final stabilization within 48 hours of final grading activities for all disturbed areas including topsoiling, permanent seeding, mulching, sodding (if deemed necessary), mulch netting, erosion matting, and stone fill.

17. **Site Cleanup:** Remove stabilized construction entrances and stabilize with permanent seed, mulch, and erosion matting as necessary. Remove all temporary erosion and sediment control measures, and perimeter controls once final stabilization has been achieved for all disturbed areas. Remove traffic controls and reestablish normal traffic patterns once work has been deemed complete, or as directly by the Resident Engineer.

18. **On-going Monitoring and Maintenance Activities:** The Contractor shall continuously inspect and maintain all erosion and sediment control measures. Additional inspections shall be required by the On-Site Plan Coordinator and/or EPSC Plan Monitor on a weekly basis and after every rain event in which runoff is discharged from the site. The following Best Management Practices (BMPs) measures are recommended throughout duration of construction:

    - The On-Site Plan Coordinator should utilize Accuweather website (www.accuweather.com) or other appropriate service to predict

precipitation events that could impact stream flows and erosion controls. The Contractor shall be prepared to install all erosion and sediment controls prior to rain events.

- The Contractor shall have all necessary erosion control equipment and materials, including mulch and mulching equipment, on-site for the duration of work in order to stabilize disturbed slopes, inlets, outlets, and any other areas of potential concern.
- Maintain dust control in current work area at all times.
- Unpaved roadway areas intended for overnight travel shall be treated with water or another approved dust control product (e.g., Calcium Chloride) prior to the end of the work day.
- Continuously inspect and maintain all stormwater, erosion, and sediment control measures throughout construction, until disturbed areas have been stabilized.
- Remove trapped sediment from erosion and sediment control measures as appropriate for each type of BMP utilized, and as directed.
- Monitoring of the EPSC and erosion controls shall continue prior to, during, and after weather conditions that could cause erosion and or sedimentation issues. The Contractor shall also anticipate the need to return to the site to address any deficiencies, as directed, on a very short time frame.

19. **Site Completion:** Upon completion of each work phase, all disturbed areas must be stabilized.

Off-Site Activities: All work related to this project is anticipated to be within the bounds of the VTrans ROW with the exception of off-site traffic detours, off-site staging and access areas, portions of the cofferdam, by-pass pumping and dewatering measures, and minor perimeter controls where there is inadequate room for the necessary construction activities. It is the responsibility of the Contractor to secure authorization for access on adjacent properties as necessary to allow work to be undertaken outside the ROW.

The project will generate a limited amount of vegetation from tree clearing activities and typical construction related debris. Any debris that requires removal from the project site will be disposed of by the Contractor in accordance with any applicable laws and regulations. All excavated soil materials (such as topsoil, soil, boulders, rock, etc.) will remain on-site and shall be utilized in final grading and stabilization of disturbed areas, to the extent possible. It is anticipated that the Contractor will need to import limited volumes of stone fill to establish finished grades within the work areas.

The Contractor intends to use off-site areas on the north and south side of the project area for construction, staging and disposal of excess waste materials. While the Contractor did not provide any documentation related to use of off-site areas prior to drafting this EPSC Plan, we understand that the necessary authorization(s) has been obtained from VTrans and the property owner(s). Applicable documentation, such as “Off-Site Activity Exemption Record” and/or

"Off-Site Activity Submittal" forms shall be included in Appendix D of this EPSC Plan. The Contractor shall adhere to all applicable conditions of these approvals, including installation, maintenance, and monitoring of general erosion and sediment controls at this location, as necessary, and in accordance with this EPSC Plan. Additional erosion and sediment control requirements have been incorporated into the construction sequence in Section 1.5 above.

EPSC Plan Updates: The EPSC Plan is a document that must be amended to reflect changes occurring at the site. Revisions to the EPSC Plan may include additions of new BMPs, replacement of failed BMPs, significant changes in the activities or their timing on the project, changes in personnel, changes in inspection and maintenance procedures, and updates to the site plans. All revisions to the EPSC Plan should be documented on the revision documentation form provided in Appendix E.

If construction activities or design modifications are made that could impact the measures shown on the enclosed EPSC Plans, this EPSC Plan and this narrative will be amended appropriately, and include a description of the new activities, and the planned erosion control measures to be implemented.

1.6 Contact Information/Responsible Parties

VTRANS PROJECT CONTACT	*PHONE/FAX/MOBILE*	*ADDRESS*
Chris Williams, Resident Engineer VTrans Construction	Mobile: (802) 498-4170	Field Office: 42 North Main Street Rochester, Vermont 05767
Jennifer Fitch, Project Manager VTrans Structures	Phone: (802) 828-3042 Fax: (802) 828-3566	One National Life Drive Montpelier, Vermont 05633-5001
William H. Farley, P.E., CPESC Assistant Construction Environmental Engineer VTrans Construction	Phone: (802) 828-5483 Fax: (802) 828-2795 Mobile: (802) 279-8143	
CONTRACTOR and EPSC CONTACT		
Kevin Ture, Project Manager W.M. Schultz Construction, Inc.	Phone: (518) 885-0060 X221 Fax: (518) 885-0744 Mobile: (518) 956-0255	Post Office Box 2620 Ballston Spa, New York 12020
ON-SITE PLAN COORDINATOR and EMERGENCY 24-HOUR CONTACT		
Tim Downes, Site Superintendent W.M. Schultz Construction, Inc.	Phone: (518) 885-0060 Fax: (518) 885-0744 Mobile: (518) 867-7425	Post Office Box 2620 Ballston Spa, New York 12020
Tom Jackson, On-Site Plan Coordinator W.M. Schultz Construction, Inc.	Phone: (518) 885-0060 Fax: (518) 885-0744 Mobile: (518) 867-5986	
EPSC PLAN PREPARER and MONITOR (AS NEEDED)		
Scott A. Williams, P.E. (VT#8952) Pathways Consulting, LLC	Phone: (603) 448-2200 Fax: (603) 448-1221 Mobile: (203) 722-5690	240 Mechanic Street, Suite 100 Lebanon, New Hampshire 03766

EPSC Responsibilities:

The On-Site Plan Coordinator shall be responsible for the following duties:

- Compliance with the EPSC Plan and other applicable documents.
- Implementing the EPSC Plan, committing resources to implement BMPs.

- Training of all staff and subcontractors as necessary to make them aware of the BMPs, control measures, and good-housekeeping procedures that must be implemented on the project site.
- Installing structural stormwater controls.
- Supervising and implementing good housekeeping programs, such as site cleanup and disposal of trash and debris, hazardous material management and disposal, and vehicle and equipment maintenance.
- Daily monitoring of the site conditions, erosion and stormwater controls, and BMPs in accordance with the Contract documents, VTrans Standard Specifications, and approved EPSC Plan requirements.
- Conducting routine inspections of the site to ensure all BMPs are being implemented and maintained, and follow-up reporting using the Inspection form provided in Appendix C.
- Maintaining the BMPs.
- Documenting changes to the EPSC Plan using the form in Appendix E.
- Communicating changes in the EPSC Plan to people working on the site.
- Subcontractor compliance with the EPSC Plan.

The EPSC Plan Monitor shall be responsible for the following duties:

- Conducting periodic (as needed) monitoring of the site conditions, erosion and stormwater controls, BMPs in accordance with the approved EPSC Plan requirements, and follow-up reporting using the Inspection form provided in Appendix C.
- Recommendations relating to EPSC Plan and BMPs.

1.7 Schedule

The project is scheduled for start with mobilization and site setup around August 11, 2014 with actual construction beginning shortly thereafter. Final completion is scheduled for October 31, 2014.

The specific schedule for construction activities at the site location are not known at this time, but the Contractor has provided a preliminary schedule of all project related activities. Once a more specific schedule is determined, dates should be added to this EPSC Plan, as appropriate.

1.8 Inspection Form

The site shall be monitored in accordance with the conditions of the approved EPSC Plan. The On-Site Plan Coordinator and/or EPSC Plan Monitor shall visit the site on a weekly basis and after every rain event to observe the conditions of surface water and erosion controls. The Inspection Form has been provided in Appendix C for use during all on-site inspections.

A maintenance inspection report will be made after each inspection by the On-Site Plan Coordinator and/or EPSC Plan Monitor. A copy of the completed form shall be filed with the VTrans, attached to this document for reference and tracking, and maintained on-site during the entire construction project. Following construction, the completed forms will be retained at the construction manager's office for a minimum of three (3) years.

2.0 EROSION PREVENTION AND SEDIMENT CONTROL PLANS

EPSC Plans for this project are included in Appendix B. The EPSC plans also include the following information:

- Direction(s) of stormwater flow and approximate slopes before and after major grading activities;
- Areas of soil disturbance;
- Areas that will not be disturbed;
- Natural features to be preserved;
- Locations of major structural and non-structural BMPs identified in the EPSC;
- Locations and timing of stabilization measures;
- Locations of storm drain inlets;
- Standard Erosion Control Specifications;
- Construction Sequencing;
- Winter Construction Notes; and
- Erosion Control Details.

This EPSC Plan document shall be updated during construction activities in order to identify each type of erosion and sediment control BMP that will be utilized.

APPENDICES

APPENDIX A
SITE LOCATION MAP

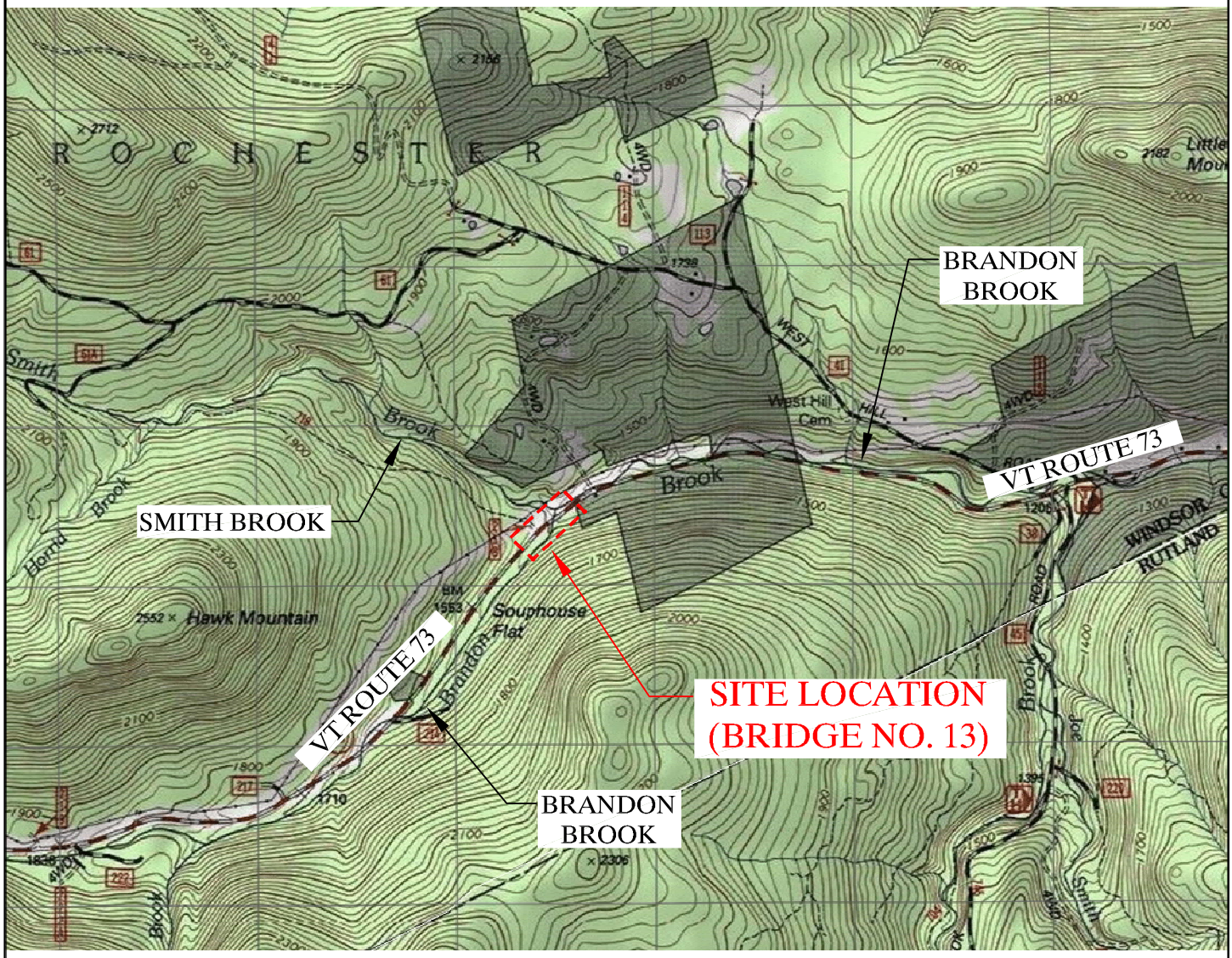

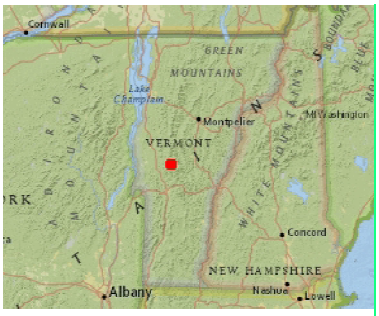

LEGEND

1,219.0 0 610.00 1,219.0 Meters

WGS_1984_Web_Mercator_Auxiliary_Sphere 1" = 2000 Ft. 1cm = 240 Meters

© Vermont Agency of Natural Resources

Pathways Consulting, LLC
240 Mechanic Street, Suite 100
Lebanon, New Hampshire 03766
(603) 448-2200 FAX: (603) 448-1221

SITE LOCATION MAP (BRIDGE 13) FOR

VTRANS ROCHESTER ER STP 0162(19)

VERMONT ROUTE 73, ROCHESTER, VERMONT

SCALE:	AS SHOWN
DESIGNED BY:	SAW
DRAWN BY:	SAW
CHECKED BY:	SAW
DATE:	08/01/14
PROJ. NO.	12455

APPENDIX B
EPSC PLANS

APPENDIX C
INSPECTION FORM

VTrans Vermont Agency of Transportation	EPSC Plan Inspection Report (Non-Jurisdictional and Low Risk Projects)	
Project Name:	**Date:**	**Time Since Last Storm:**
Inspector:	**On-Site Coordinator:**	

Measure Inspected	Y	N	STA/Off	Corrective Action Taken (CAT)	Date CAT
Boundary Limits					
Site boundary markers are up and visible					
Disturbance is only occurring within marked boundaries					
Limit Disturbance Area					
Only acreage listed on *Authorization to Discharge* is disturbed at one time					
Stabilize Construction Entrance/Exit					
Off site tracking of sediment prevented					
Sediment Barriers					
Silt fence trenched into ground					
Accumulated sediment < ½ height of measure					
Diversion					
All upland stormwater is diverted around the work area					
Check Dams					
Check dams are in place and stretch the width of the channel					
Channels are stable with no erosion					
Stabilize Exposed Soils					
Seed and mulch, and/or matting placed in accordance w/ permit requirements					
Soil is seeded and mulched or covered in erosion matting within 48 hours of final grade					
Winter Stabilization					
After Sept. 15, all disturbed areas are seeded & mulched to 3" deep or covered w/ matting					
For ongoing construction, exposed soil is mulched prior to forecasted events					
Dewatering Activities					
Accumulated sediment is removed to allow sufficient treatment					

* Additional Measures and Discharges shall be reported on the back side of this form.

Vermont Agency of Transportation

EPSC Plan Inspection Report (Non-Jurisdictional and Low Risk Projects)

Measure Inspected	Y	N	STA/Off	Corrective Action	Date Taken
Additional Measures					
Discharges Noted					

* If there is a discharge of visibly discolored stormwater from the construction site to waters of the state, the On-Site Plan Coordinator shall inform the Resident Engineer and take corrective action and report the discharge in accordance with Section 6.1 of Permit 3-9020.

APPENDIX D
OFF-SITE ACTIVITY RECORDS

APPENDIX E
EPSC PLAN REVISION DOCUMENTATION FORM

EPSC Plan Revision Documentation Form

This Erosion Prevention and Sediment Control Plan (EPSC Plan) should be revised and updated to address changes in site conditions, new or revised government regulations, and additional on-site stormwater and erosion controls.

All revisions to the EPSC Plan must be documented on the EPSC Plan Revision Documentation Form, which should include the information shown below. The authorized facility representative who approves the EPSC Plan should be an individual at or near the top of the facility's management organization, such as the president, vice president, construction manager or supervisor, on-site coordinator, or environmental manager. The signature of this representative attests that the EPSC Plan revision information is true and accurate. Previous authors and facility representatives are not responsible for the revisions.

Revision Number	Description of the Revision	Date	Revision Preparer	Company Representative Signature
Originally Issued	Draft	August 1, 2014	Pathways Consulting, LLC	Scott A. Williams, P.E.
1	Final		Pathways Consulting, LLC	Scott A. Williams, P.E.
2				
3				
4				
5				

APPENDIX F
NOTICE OF INTENT

Vermont Department of Environmental Conservation
Watershed Management Division
Main Building, Second Floor
One National Life Drive
Montpelier, VT 05620-3522

Agency of Natural Resources

[phone] 802-828-1535

The Notice of Intent for the discharge of stormwater runoff from Low Risk Construction Activity under Construction General Permit (CGP) 3-9020 (Amended 2008) has been authorized**.** Enclosed are four documents that you will need to maintain compliance with this authorization.

1. Authorized Notice of Intent (NOI)
The authorized NOI for Low Risk Projects is valid for two years from the date of the authorization. If the project will proceed past the automatic termination date, you must reapply for coverage under this or another construction stormwater permit before that time.

2. Notice of Authorization for Posting
The notice of Authorization, which details the authorization and conditions you selected in completion of Appendix A to the CGP, must be posted in a location visible to the public in accordance with Subpart 4.5.C of the CGP. In accordance with subpart 5.1 of the CGP, the project risk score must be re-evaluated prior to any major changes to the construction plan.

3. Low Risk Site Handbook for Erosion Prevention and Sediment Control
Please provide the Principal Operator with the low risk site handbook. This handbook details the practices that must be implemented throughout the construction project to prevent erosion and the discharge of sediment from the construction site. Some practices must be in place before construction begins, so please review the entire handbook before starting the project.

4. Notice of Addition of Co-Permittee
This form must be submitted for every new landowner or principal operator who joins the project, in accordance with Subpart 7.2 of the CGP.

The CGP, copies of pertinent forms, and an electronic version of the Low Risk Site Handbook for Erosion Prevention and Sediment Control are available on the stormwater website at: http://www.vtwaterquality.org/stormwater/htm/sw_cgp.htm. If you have any questions related to your authorization, please contact the appropriate analyst in the Stormwater District where your project is located. Use our District Look-up Tool for details.

Sincerely,

Stormwater Management Program

Cc: Co-Permittee/Application Preparer/Designer (if applicable)

Notice of Authorization

Under Vermont Construction General Permit 3-9020
For **Low Risk Projects**

VERMONT
ENVIRONMENTAL CONSERVATION

Project Name:	**Notice of Intent Number:** 7240-9020
Rochester ER STP 0162 (19)- Bridge 13	**Date of Authorization:** July 28, 2014
Permittee Name:	
Vermont Agency of Transportation	**Date of Expiration:** July 28, 2016

The project listed above has received authorization under General Permit 3-9020 to discharge stormwater from the following construction activities:

Staging of equipment, soil, fill materials. Removal of 10' diameter culvert, installation of precast concrete arch culvert.

This authorization includes the following requirements:

1. Implementation of erosion prevention and sediment control practices required by the Low Risk Site Handbook for Erosion Prevention and Sediment Control.

2. All areas of disturbance must have temporary or final stabilization within **7 days** of the initial disturbance. After this time, all disturbed soil must be stabilized at the end of each work day. Between October 15 and April 15 all disturbed soil must be stabilized at the end of each work day. The following exceptions apply:
    a. Stabilization is not required if work is to continue in the area within the next 24 hours and there is no precipitation forecast for the next 24 hours.
    b. Stabilization is not required if the work is occurring in a self-contained excavation (i.e. no outlet) with a depth of 2 feet or greater (e.g. house foundation excavation, utility trenches).

3. No more than **2 acres** of land may be disturbed at any one time.

4. Inspections shall be conducted at least once every (7) calendar days and within twenty-four (24) hours of the end of a storm event resulting in discharge of Stormwater from construction site.

5. If there is a discharge of visibly discolored stormwater from the construction site or from the construction site to waters of the State, the permittee shall take immediate corrective action.

6. If, after completing corrective action, there continues to be a discharge of sediment from the construction site to waters of the State, the permittee shall notify DEC by submitting a report within 72 hours of the discharge.

To request information on this authorization, or to report compliance concerns, please contact:

Vermont DEC, Watershed Management Division
Main Building, Second Floor
One National Life Drive
Montpelier, VT 05620-3522
(802) 828-1535

[See next page for posting requirements]

Permittee Directions for Posting:
This notice shall be placed near the construction entrance at a location visible to the public. If displaying near the main entrance is infeasible, the notice shall be posted in a local public building such as the town hall or public library. For linear projects, the notice shall be posted at a publicly accessible location near the active part of the construction project (e.g., where a pipeline project crosses a public road).

Notice of Addition
Of Owners or Operators To Coverage
Under Vermont Construction General Permit 3-9020

VERMONT
ENVIRONMENTAL CONSERVATION

Submission of this completed form constitutes notice that the entity in Section C seeks to be added as a co-permittee to an existing authorization to discharge under Vermont's Stormwater Construction General Permit (CGP) from the project identified in Section A. All landowners and persons who meet the definition of Principal Operator (Subparts 2.1B, 3.1B of the CGP) and who were not included on the original NOI must submit a Notice of Addition form.

A. Project Information
1. Project Name:_____ 2. Notice of Intent Number: _____

B. Original Permittee Information
1.Name: _____

2. Mailing Address:
a. Street/PO Box: _____

b. City/Town: _____ c. State: _____ d. Zip:_____
3. Contact Information

a. Phone: _____ b. Fax: _____ c. Email: _____

C. New Co-Permittee Information
Check one or both: ☐ New Landowner ☐ New Principal Operator

1.Name: _____

2. Business Name: _____
3. Mailing Address:
a. Street/PO Box: _____

b. City/Town: _____ c. State: _____ d. Zip:_____
4. Contact Information

a. Phone: _____ b. Fax:_____ c. Email: _____

D. Request for Addition as Co-Permittee
I hereby request that the entity in Section C be added as co-permittee to the existing authorization to discharge stormwater from construction activities stated in Section A. In requesting co-permittee status, I hereby certify under the penalty of law that I have read, understand, and meet the eligibility conditions of the CGP; that I agree to comply with all applicable terms and conditions of the CGP; that I understand that continued authorization under the CGP is contingent on maintaining eligibility for coverage, and that the applicable practices in the authorized Erosion Prevention and Sediment Control Plan must be implemented and maintained for the duration of the construction activities. I agree to comply with all applicable terms and conditions of the General Permit 3-9020.

Signature: _____ Date: _____

Submit <u>Original</u> Form to:
VT DEC, Watershed Management Division
1 National Life Drive, Main 2
Montpelier, VT, 05620-3522

Print Form

Notice of Intent (NOI)

for Stormwater Discharges Associated with Construction Activity on

Low Risk Sites

Under Vermont Construction General Permit 3-9020

For Department Use Only
NOI Number: 7240-9020

RECEIVED JUL 10 2014 WSMD

VERMONT ENVIRONMENTAL CONSERVATION

Submission of this completed Notice of Intent (NOI) constitutes notice that the entity in Section A intends to be authorized to discharge pollutants to waters of the State, from the project identified in Section C, under Vermont's Construction General Permit (CGP). Submission of the NOI constitutes notice that the party identified in Section A of this form has read, understands, and meets the eligibility conditions of the CGP; has determined that the project qualifies for coverage as a Low Risk project in conformance with Appendix A of the CGP; agrees to comply with all applicable terms and conditions of the CGP; understands that continued authorization under the CGP is contingent on maintaining eligibility for coverage; and that all applicable practices in the Low Risk Site Handbook for Erosion Prevention and Sediment Control must be implemented and maintained for the duration of construction activities. In order to be granted coverage, all information required on this form must be provided and an application fee of $50 payable to the State of Vermont must be submitted.

A. Landowner Information

1a. Name: Vermont Agency of Transportation 1b. Contact (if applicable): William Farley

2. Mailing Address
a. Street/P.O. Box: 1 National Life Drive, Construction Office

b. City/Town: Montpelier c. State: Vermont d. Zip: 05663

3. Contact Information
a. Phone: 802-828-5483 b. Fax: c. Email: william.farley@state.vt.us

B. Principal Operator Information *(if known)*

1. Name: W.M. Schultz Construction, Inc.

2. Mailing Address
a. Street/P.O. Box: P.O. Box 2620

b. City/Town: Ballston Spa c. State: NY d. Zip: 12020

3. Contact Information
a. Phone: 518-885-0060 b. Fax: 518-885-0744 c. Email: rhinman@wmschultz.com

C. Application Preparer Information *(if applicable)*

1a.Name: W.M. Schultz Construction, Inc. 1b. Contact (if applicable): Rob Hinman

2. Mailing Address:
a. Street/P.O. Box: P.O. Box 2620

b. City/Town: Ballston Spa c. State: NY d. Zip: 12020

3. Contact Information
a. Phone: 518-885-0060 b. Fax: 518-885-0744 c. Email: rhinman@wmschultz.com

See Filing Directions for Low Risk Projects

Form revised June 2012

D. Project Information

1. Project Name: Rochester ER STP 0162 (19) - Bridge 13

2a. Is this project part of a Common Plan of Development[1]? ☐ Yes ☒ No

2b. If Yes, Name of Development: _____

3a. Does this project have any previously issued or pending stormwater discharge permits? ☐ Yes ☒ No

3b. If Yes, Prior NOI Number(s): _____

4. Location Address

a. Street: RT 73 (Brandon Mountain Rd) b. City/Town: Rochester

c. Latitude: 43 ° 51 ' 05 " d. Longitude: 72 ° 55 ' 25 " e. County: Windsor

➲ Use DEC's Waterbody Identification (WBID) ArcGIS webpage *(click here)* to answer questions 5 and 6 below

5. Name of receiving water(s)[2]: Upper White River Watershed 6. Include a topographic location map.

7. Project Type: ☐ Residential ☐ Commercial ☐ Industrial ☒ Other: Capital Improvement Project

8. Total Area of Disturbance: 1.95 acres 9. Description of construction activities to be permitted (below):

Staging of equipment/soil/Fill materials. Removal of 10' diameter culvert, Installation of precast concrete arch culvert

E. Public Notice Requirement

You must provide a copy of this complete NOI form to the municipal clerk for posting in the municipality in which the project is located. If the project and the related discharge(s) are located in different municipalities, then the completed NOI must be filed with the municipal clerk in each municipality. The municipal clerk must post the completed NOI. In order to be considered complete, you must include the date of posting.

Date of Posting at Municipal Office(s): June 24 2014 Attest: Joann McDonnell, Town Clerk Rochester VT.

Information for the Municipal Clerk regarding posting instructions can be found on Page 4 of this NOI.

F. Certification Relating to the Accuracy of the Information Submitted

I hereby certify under penalty of law that this document and all attachments were prepared under my direction or supervision in accordance with a system designed to assure that qualified personnel properly gathered and evaluated the information submitted. Based on my inquiry of the person or persons who manage the system, or those persons directly responsible for gathering the information, the information submitted is, to the best of my knowledge and belief, true, accurate, and complete. I am aware that there are significant penalties for submitting false information, including the possibility of fine and imprisonment for knowing violations. I also certify that the applicable practices in The Low Risk Site Handbook for Erosion Prevention and Sediment Control will be implemented for the duration of the project for which this NOI is submitted.

Landowner Name: William Farley Title: Assistant Construction Environmental Eng.

Signature: William Farley Date: 7/9/2014

Principal Operator: W.M. Schultz Construction - Rob Hinman Title: Project Manager
(if known)

Signature: Robert J. H Date: 6/23/14

Application Preparer: W.M. Schultz Construction - Rob Hinman Title: Project Manager
(if applicable)

Signature: Robert J. H Date: 6/23/14

[1] "Common Plan of Development" is defined within the CGP 3-9020, Appendix C – Definitions, page A-12

[2] "Waters of the State" (i.e. receiving water) is defined within the CGP 3-9020, Appendix C – Definitions, page A-16

For Department Use Only

VERMONT DEPARTMENT OF ENVIRONMENTAL CONSERVATION AUTHORIZATION TO DISCHARGE

A determination has been made that the proposed construction activities qualify for coverage under General Permit 3-9020 (amended 2008) as a Low Risk project. Subject to the conditions of General Permit 3-9020 (amended 2008) the applicant is hereby authorized to discharge stormwater runoff from a construction site as described in this Notice of Intent Number 7240-9020.

Dated this 28th day of July, 2014

David K. Mears, Commissioner Department of Environmental Conservation

By: Padraic Monks

Padraic Monks, Program Manager
Stormwater Program

PUBLIC COMMENT

Public comments concerning this Notice of Intent to discharge under CGP 3-9020 (amended 2008) are invited and must be submitted within 10 days of receipt of this Notice by the Municipal Clerk. Comments should address how the application complies or does not comply with the terms and conditions of CGP 3-9020 (amended 2008). A letter of interest should be filed by those persons who elect not to file comments but who wish to be notified if the comment period is extended or reopened for any reason. All written comments received within the time frame described above will be considered by the Department of Environmental Conservation in its final ruling to grant or deny authorization to discharge under CGP 3-9020 (amended 2008). Send written comments to:

Vermont Department of Environmental Conservation
Watershed Management Division, Stormwater Program
1 National Life Drive, Main Building Second Floor
Montpelier, VT 05620-3522

Please cite the NOI number in any correspondence.

APPEALS

Renewable Energy Projects – Right to Appeal to Public Service Board
If this decision relates to a renewable energy plant for which a certificate of public good is required under 30 V.S.A. §248, any appeal of this decision must be filed with the Vermont Public Service Board pursuant to 10 V.S.A. §8506. This section does not apply to a facility that is subject to 10 V.S.A. §1004 (dams before the Federal Energy Regulatory Commission), 10 V.S.A. §1006 (certification of hydroelectric projects) or 10 V.S.A. Chapter 43 (dams). Any appeal under this section must be filed with the clerk of the Public Service Board within 30 days of the date of this decision. For further information, see the Public Service Board website at http://psb.vermont.gov or call (802) 828-2358. The address for the Public Service Board is 112 State Street Montpelier, Vermont 05620-2701.

All Other Projects – Right to Appeal to Environmental Court
Pursuant to 10 V.S.A. Chapter 220, any appeal of this decision must be filed with the clerk of the Environmental Court within 30 days of the date of the decision. The Notice of Appeal must specify the parties taking the appeal and the statutory provision under which each party claims party status; must designate the act or decision appealed from; must name the Environmental Court; and must be signed by the appellant or their attorney. In addition, the appeal must give the address or location and description of the property, project or facility with which the appeal is concerned and the name of the applicant or any permit involved in the appeal. The appellant must also serve a copy of the Notice of Appeal in accordance with Rule 5(b)(4)(B) of the Vermont Rules for Environmental Court Proceedings. For further information, see the Vermont Rules for Environmental Court Proceedings, available online at www.vermontjudiciary.org or call (802) 828-1660. The address for the Environmental Court is 2418 Airport Road, Suite 1, Barre, Vermont 05641.

A copy of CGP 3-9020 (amended 2008) may be obtained by calling (802) 828-1535; by visiting the Department at the above address between the hours of 7:45 am and 4:30 pm; or by download from the Watershed Management Division's Web site at: www.vtwaterquality.org.

INFORMATION FOR MUNICIPAL CLERK

10 V.S.A. Chapter 47 §1263(b) provides for the public notice of an applicant's intent to discharge stormwater runoff associated with construction activity. Please post this notice and instruction sheet in a conspicuous place for 10 days from the date received. If you have any questions, contact the Watershed Management Division of the Department of Environmental Conservation at (802) 828-1535.

Submit this form and the $50 fee to:

Vermont Department of Environmental Conservation
Watershed Management Division, Stormwater Program
1 National Life Drive, Main Building Second Floor
Montpelier, VT 05620-3522