F.R. LaFAYETTE,
BRIDGE 19
SOUTH EAST CORNER
P/N: 0033.903950
MAT: A572 Gr. 50
QTY: 1 PCS.

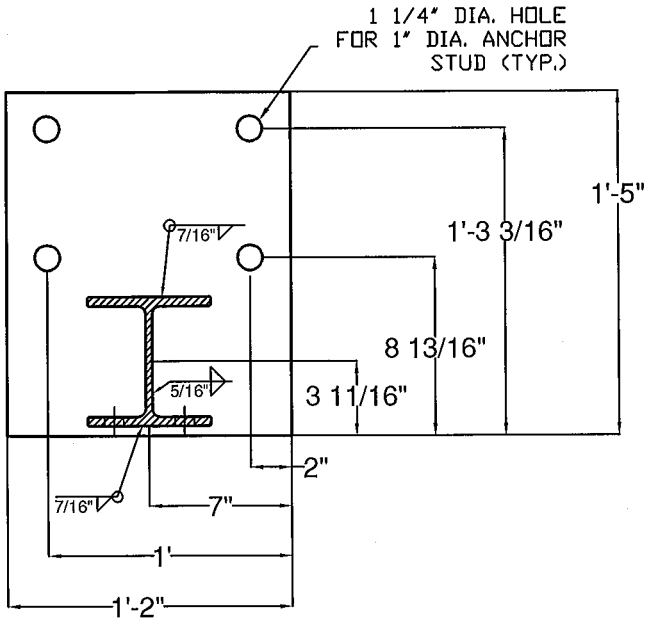

WPS-3024

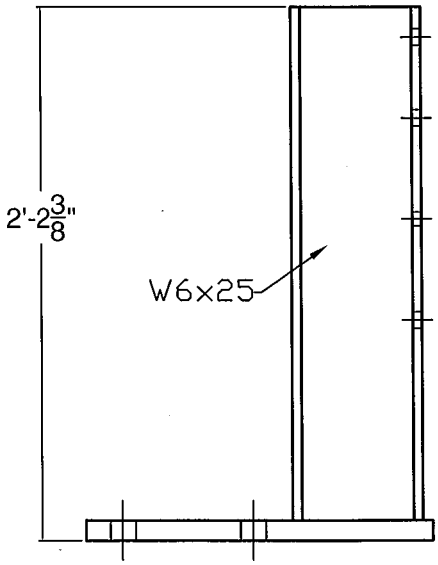

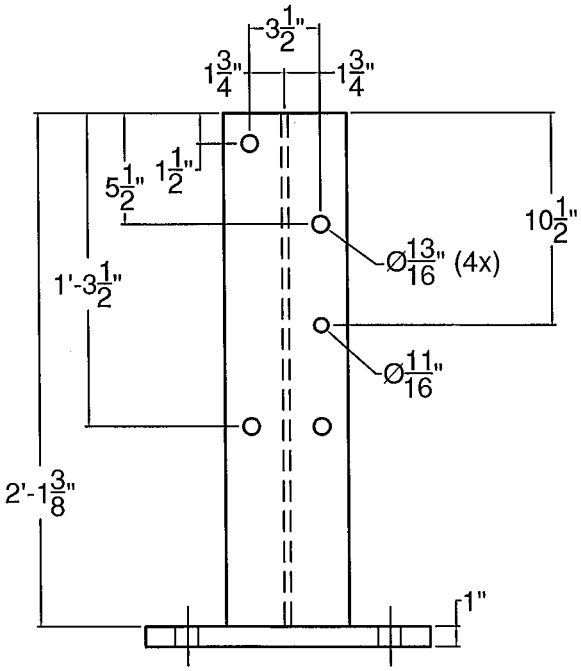

F.R. LaFAYETTE,
BRIDGE 19
NORTH EAST CORNER
P/N: 0033.903951
MAT: A572 Gr. 50
QTY: 1 PCS.

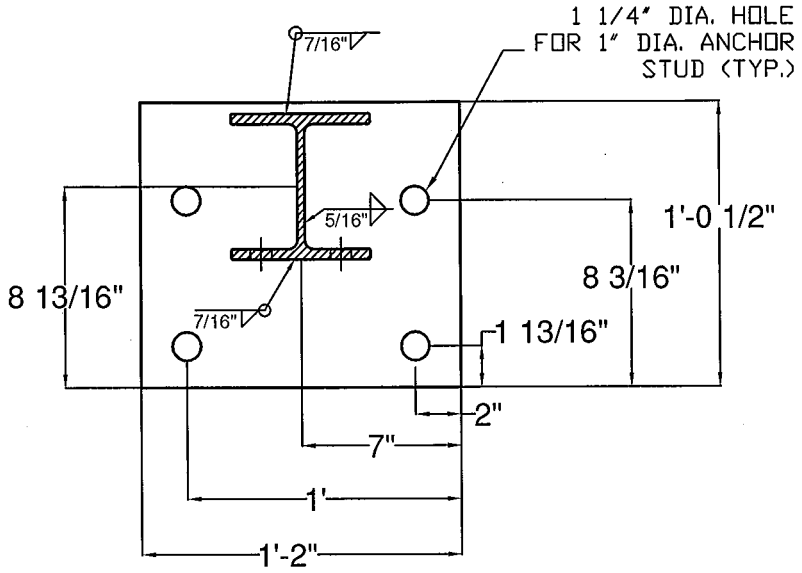

WPS-3024

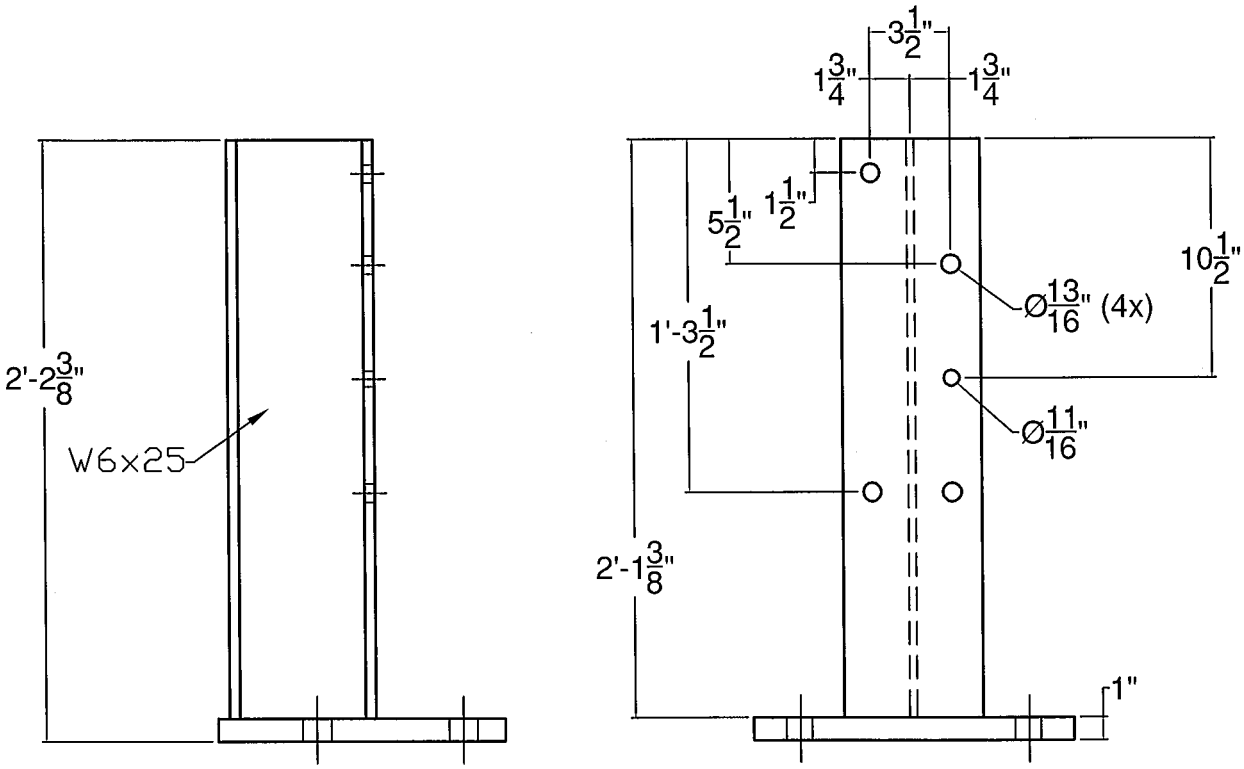

#0033.903952

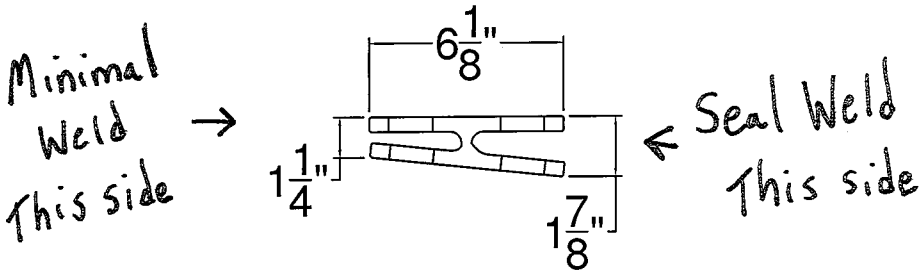

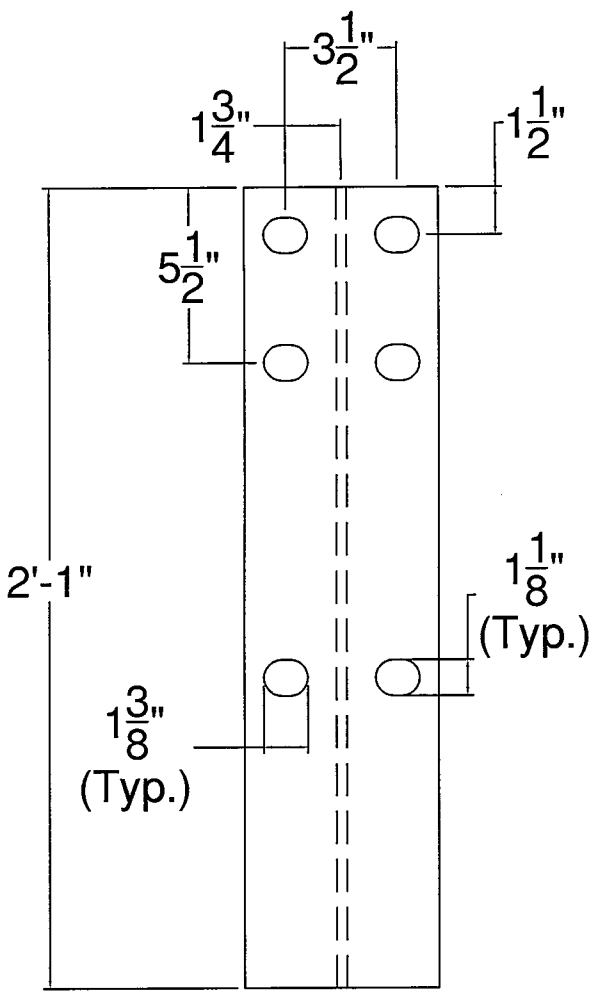

Back

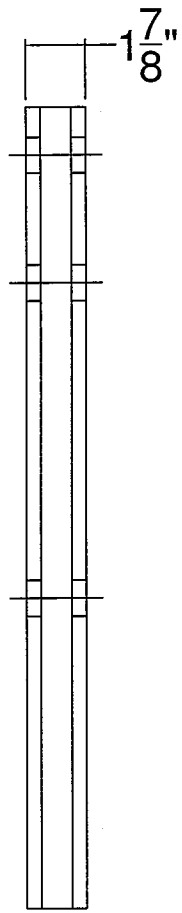

Side

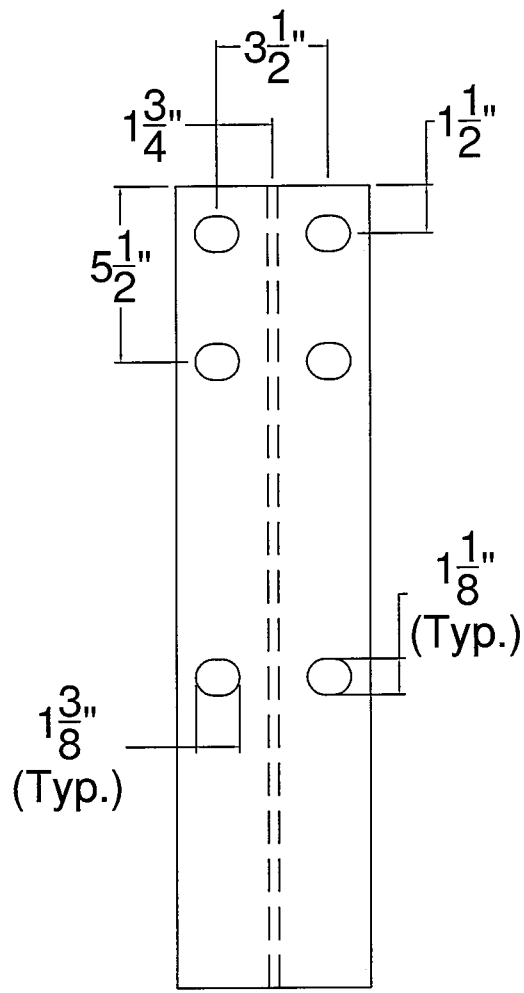

Front

1 EA.

#0033.903953

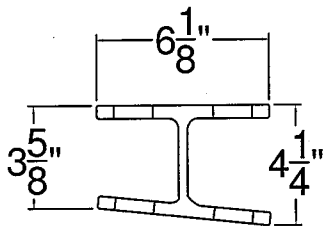

Web to be Welded on Both sides

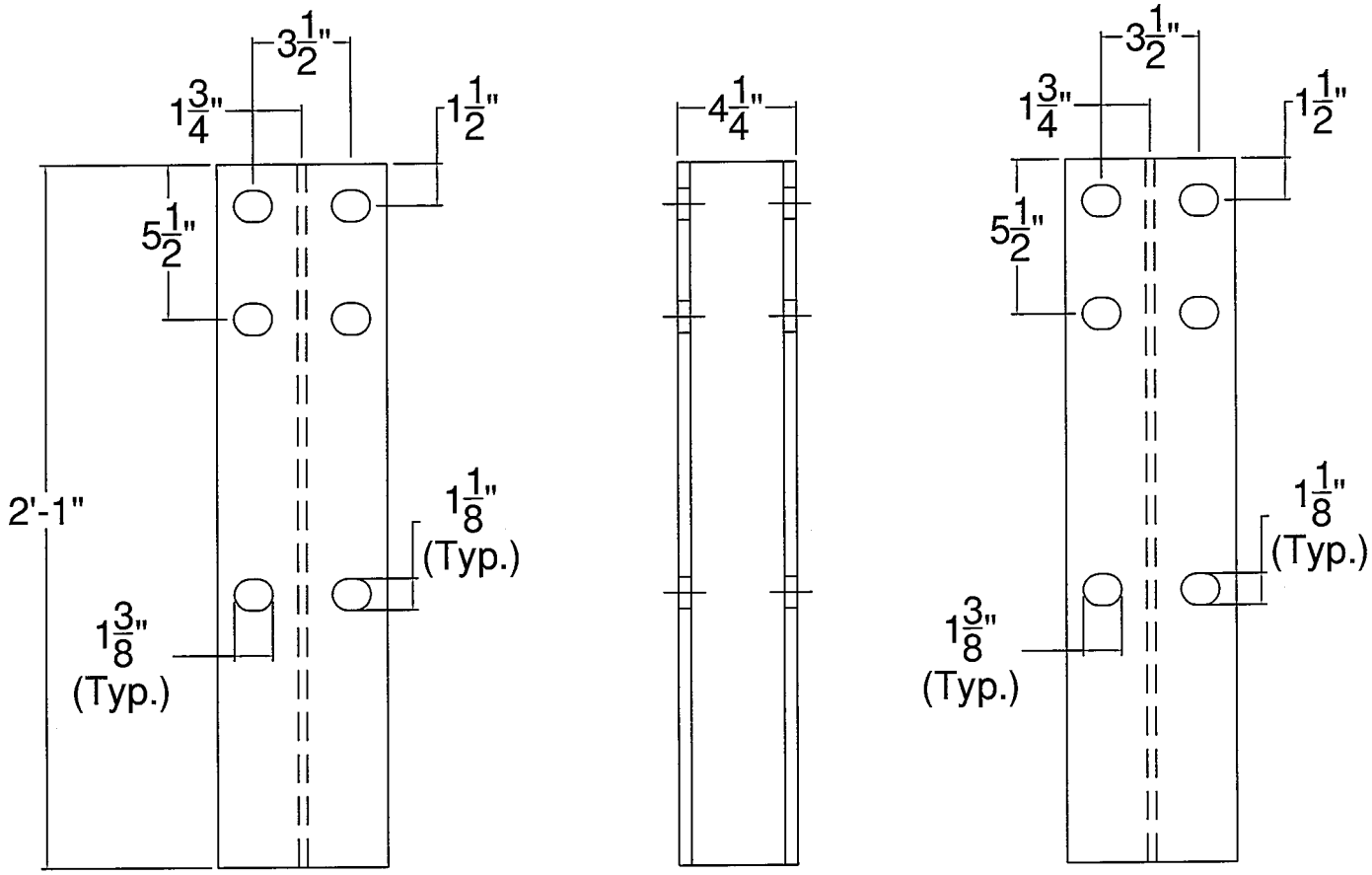

Back Side Front

1 EA.

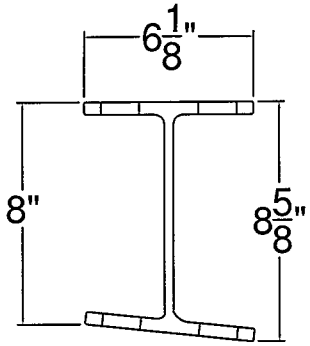

Web to be
Welded on
Both Sides

#0033.903954

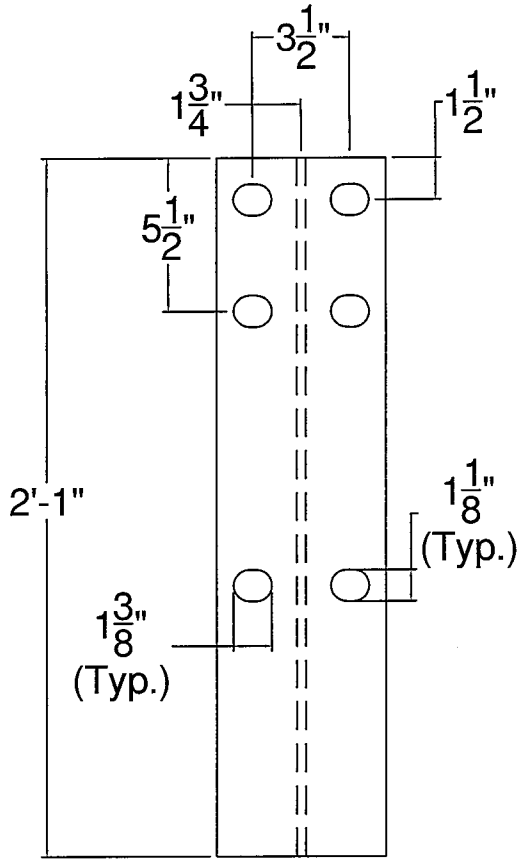

Back

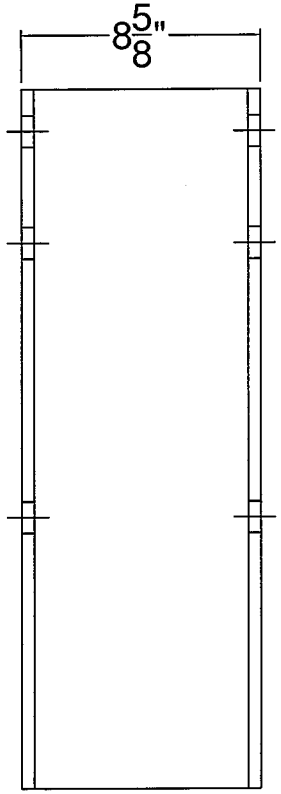

Side

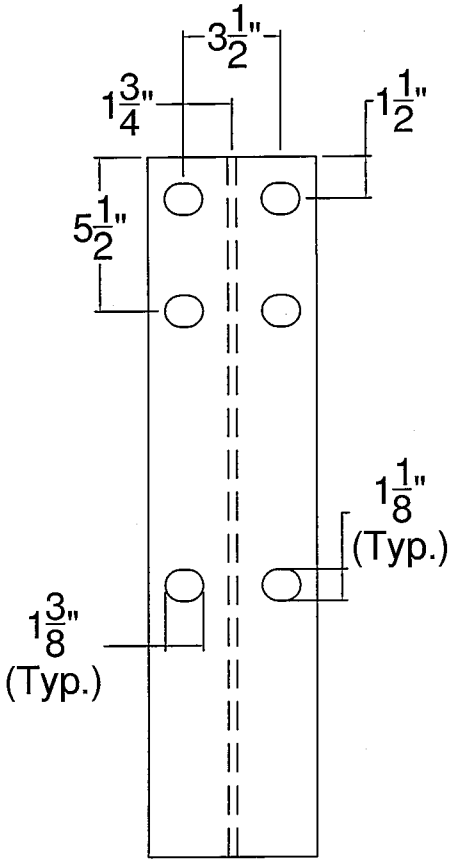

Front

1 EA.