Vermont Agency of Transportation
RECEIVED
ON: March 20, 2014
and Checked for
CONFORMANCE
BY: Jennifer Fitch DATE: 04/08/2014

REVIEW NOTES
ROCHESTER ER BRF 0162(18) – BRIDGE NO. 19
TEMPORARY BRIDGE DRAWINGS
April 7, 2014

RE: Temporary Bridge Drawings received from Schultz Construction on 3/19/2014.

VHB Project No.: 57517.00

These notes accompany the review of the Temporary Bridge Drawings reviewed by VHB on 4/7/2014.

General Notes

1. Contractor is to provide erection or installation information with working drawings in accordance with Section 528 of the 2011 VTrans Standard Specifications for Construction.
2. Contractor is to provide drainage and/or cross slope information for temporary bridge.

SUBMITTAL REVIEW

☐ Reviewed and approved but only for conformance to the Construction Contract Documents.

☒ Revise and Resubmit

Corrections or comments made during this review do not relieve the Contractor or his Designer from compliance with professional requirements or for responsibility for the adequacy of the submittal information. This check is only for review of general conformance with industry standards and general compliance with the information given in the Contract Documents. VHB has not conducted a detailed review of the submittal and has not performed calculations or assessed the adequacy of loads, design criteria, quantities, dimensions, etc. Approval of the submittal does not constitute VHB's approval of any construction means, methods or techniques. These remain the responsibility of the Contractor.

Vanasse Hangen Brustlin, Inc.
7056 US Route 7 • Post Office Box 120
North Ferrisburgh, VT 05473
802.425.7788

Job Number: 57517.00
Reviewed By: E.A. Fiala
Date: April 7, 2014

This submittal review is for sheets 1-14 of the "SIGNED - Acrow Calcs and Plans 130xTSR3x2L24_Rochester VT_031014" submittal received on 3/20/2014.

ACROW 700 XS BRIDGE
FOR
SCHULTZ CONSTRUCTION, INC
BALLSTON SPA, NY
FEBRUARY 2014

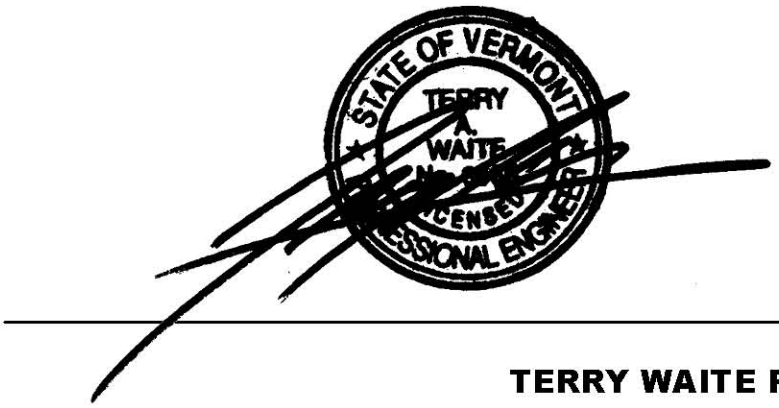

TERRY WAITE P.E
TAW ASSOCIATES
VERMONT LICENSED PROFESSIONAL ENGINEER
VT PE# 6585
MARCH 10, 2014

CONTENTS

PAGE(S)	DESCRIPTION
A	BASIS OF DESIGN
1	TRANSOM ANALYSIS
2	TRUSS ANALYSIS
3	REACTIONS
R1-R2	REFERENCES
SH. 1-5	DRAWINGS

BASIS OF DESIGN
ACROW 700 XS BRIDGE
FOR
VAOT – RTE 73 AT RTE 100
ROCHESTER, VT
MARCH 2014

Design Specifications:

2002 AASHTO Standard Specifications for Highway Bridges and Current Addendums

Design Method:

ASD

Loading:

1. 2-Lanes HS 20-44
2. 2" Asphalt Overlay – 25psf

Bridge Type:

Bridge is a 700XS Acrow Panel Vehicular Bridge with one simple span of 130 feet. The side truss construction is Triple Single Reinforced Three (TSR3). The deck width is 24 feet curb to curb and will have a 2 inch asphalt overlay applied to the decking surface.

Components Analyzed:

1. Transom
2. Trusses

DECKING

The deck supplied is Acrow's Part Numbers 601/602

These decks are capable of HS 25-44 wheel loads plus 30% Impact

LOAD = HS 20-44 **(Wheels Positioned for Maximum Moment)**

TRANSOM

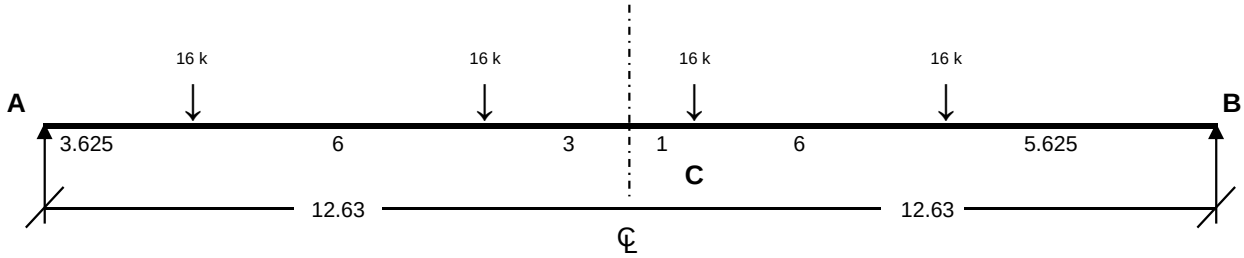

$\sum M_A$ = 16 k (3.625 + 9.625 + 13.63 + 19.63) - B (25.25)

B = 29.5 k

A = 34.5 k

$\sum M_C$ = 16 k (6) - 29.47 (11.63)

= -246.53 k-ft + 30% Impact = **320.5 k-ft**

DEAD LOAD

TRANSOM =	2.40 k	2.40 k
DECK =	26 psf * (10) * (24)	6.24 k
2" Asphalt Overlay =	25 psf * (10) * (24)	6.00 k
BRACING =	0.85 k	0.85 k
		15.49 k

$$M_{DL} = \frac{15.49 * 25.25}{8} = \mathbf{48.89\ k\text{-}ft}$$

M_{TOT} = 320.5 k-ft + 48.9 k-ft = **369.4 k-ft**

F_y = 50 ksi

Fb = (0.55) * 50 ksi = 27.5 ksi

$$f_b = \frac{369.4\ \text{k-ft} * 12\ {}^{in}/_{ft}}{176\ in^3} = 25.19\ \text{ksi}$$

S_{xx} of W24x76 (AB585)

f_b = 25.19 ksi < 27.5 ksi ∴ **OK**

Shear is Negligible

Prepared by:
ZCW
Checked by:
MJP

Schultz Construction
130x2L24xTSR3
Rochester, VT

TRUSS

Span: 130 ft
Truss: TSR3
Load : 2 Lanes HS 20-44
Bridge Type: Acrow Series 700XS
Bridge coating is 2" Asphalt Overlay

Impact: $\frac{50}{125 + 130}$ = 19.6% Eccentricity: 7%

TSR3 = 6.67 $^{k}/_{bay}$
2L24 = 9.49 $^{k}/_{bay}$
16.16 $^{k}/_{bay}$ * $^{1\ bay}/_{10\ ft}$ = 1.62 $^{k}/_{ft}$

$M_{DL\ Bridge}$: $\frac{(1.62\ ^{k}/_{ft}) * (130\ ft)^2}{8}$ = **3,422.3 k-ft**

$V_{DL\ Bridge}$: $\frac{(1.62\ ^{k}/_{ft}) * (130\ ft)}{2}$ = **105.3 k**

2" Asphalt = 0.025 $^{kips}/_{sq.ft}$ * 24 ft roadway = 0.60 $^{k}/_{ft}$

$M_{DL\ Asphalt}$: $\frac{(0.60\ ^{k}/_{ft}) * (130\ ft)^2}{8}$ = **1,267.5 k-ft**

$V_{DL\ Asphalt}$: $\frac{(0.60\ ^{k}/_{ft}) * (130\ ft)}{2}$ = **39.0 k**

Live Load Figures are Per AASHTO

$M_{LL + I + Ecc.}$: 2063.1 k-ft * 2 Lanes 19.6% (Imp)+ 7% (Ecc.) = **5,280.4 k-ft**
$V_{LL + I + Ecc.}$: 67.6 k * 2 Lanes 19.6% (Imp)+ 7% (Ecc.) = **173.0 k**

M_{TOT}: 5,280.4 k-ft + 1,267.5 k-ft + 3,422.3 k-ft = **9,970.1 k-ft**

V_{TOT}: 173.0 k + 39.0 k + 105.3 k = **317.3 k**

F_y = 65 ksi
F_b = (0.55) * 65 ksi = 35.8 ksi

$f_b = \frac{9{,}970.1\ k\text{-}ft * 12\ ^{in}/_{ft}}{4{,}239\ in^3}$ = 28.2 ksi < 35.8 ksi ∴ OK

TSR3 (see Ref.)

V_{ALL} = 540 k (AB 702 Shear w.o End Post)

317.3 k < 540 k ∴ OK

∴ Use Triple Single Reinforced Three Truss

Prepared by:
ZCW
Checked by:
MJP

Schultz Construction
130x2L24xTSR3
Rochester, VT

ACROW PANEL BRIDGE REACTIONS
PER CORNER OF BRIDGE

130 ft. x TSR3 — Design Truck : HS 20-44
24 ft. Roadway — Bridge Coating: 2" Asphalt Overlay

REACTION (KIPS):

Bridge Dead Load :	53
Bridge Coating :	20
HS 20-44 (w/ Ecc.) :	73
TOTAL (KIPS)	146
TRANSVERSE (WIND)	30

130ft * (0.45 klf) ÷ 2 SIDES = 29.25 kips

NOTE:

- MAX. REACTIONS GIVEN PER **CORNER** OF SPAN
- LOADS ARE **NOT** FACTORED FOR IMPACT
- ECCENTRICITY INCLUDED
- WIND BASED ON AASHTO MIN .450 KLF

REFERENCES

SELF WEIGHTS OF ACROW PANEL 700XS BRIDGES

TABLE A:

Weights of Decks & Width Dependent Components
Weights given are per 10 ft bay in kips or metric tonnes

Width	*Including Deck*		*Without Deck*	
	Kips	*Tonnes*	*Kips*	*Tonnes*
SCW	4.47	2.028	1.21	0.549
EW	5.09	2.309	1.43	0.649
EW(HVY)	5.35	2.427	1.69	0.767
EW18	6.67	3.026	1.86	0.844
2L24	9.49	4.306	3.12	1.416
2L24(HVY)	10.04	4.555	3.67	1.665
2L30	12.53	5.685	4.61	2.092
2L30(HVY)	13.60	6.171	5.6	2.541
3L36	18.39	8.344	8.91	4.043

TABLE B:

Weights of Truss Components
Weights are given for 10ft bays and include both trusses

Truss	*Kips*	*Tonnes*	*Truss*	*Kips*	*Tonnes*
SS	1.59	0.721	**DD**	6.32	2.868
SSR	2.21	1.003	**DDR1**	6.94	3.149
SSRH	2.38	1.080	**DDR1H**	7.11	3.226
			DDR2	7.55	3.426
DS	3.31	1.502	**DDR2H**	7.90	3.584
DSR1	3.93	1.783			
DSR1H	4.10	1.860	**TD**	9.27	4.206
DSR2	4.54	2.060	**TDR2**	10.50	4.764
DSR2H	4.89	2.219	**TDR2H**	10.85	4.923
			TDR3	11.12	5.045
TS	4.82	2.187	**TDR3H**	11.64	5.281
TSR2	6.06	2.750			
TSR2H	6.41	2.908	**QD**	12.19	5.531
TSR3	6.67	3.026	**QDR**	14.66	6.652
TSR3H	7.20	3.267	**QDRH**	15.36	6.969

→ **For Asphalt add 12.5 lbs per inch thickness per square foot**
For Epoxy Aggregate Anti-Skid Coating add 3 lbs per square foot
For 5 ft wide footwalk add 0.14 kips per foot

TABLE OF PROPERTIES FOR ACROW 700XS BRIDGE

TRUSS CONSTRUCTION	SECTION MODULUS		MOMENT OF INERTIA		SHEAR VALUES							
					701 With Endpost		702 Without Endpost		702 With Endpost		708 Without Endpost	
	in^3	cm^3	in^4	cm^4	kips	kN	kips	kN	kips	kN	kips	kN
SS	700	11,471	31,544	1,312,960	120	534	180	801	N/A	N/A	230	1,023
DS	1,400	22,942	63,088	2,625,921	240	1,068	360	1,601	N/A	N/A	460	2,046
SSR	1,413	23,155	69,222	2,881,237	120	534	180	801	N/A	N/A	230	1,023
SSRH	1,585	25,973	79,268	3,299,383	120	534	180	801	N/A	N/A	230	1,023
TS	2,100	34,413	94,632	3,938,881	360	1,601	540	2,402	N/A	N/A	690	3,069
DSR1	2,113	34,626	100,766	4,194,198	174	774	261	1,161	N/A	N/A	334	1,486
DSR1H	2,285	37,444	110,812	4,612,344	167	743	250	1,112	N/A	N/A	320	1,423
QS	2,800	45,884	126,176	5,251,842	480	2,135	720	3,203	N/A	N/A	920	4,092
DSR2	2,826	46,310	138,444	5,762,474	240	1,068	360	1,601	N/A	N/A	460	2,046
DD	2,936	48,112	264,200	10,996,834	360	1,601	360	1,601	480	2,135	460	2,046
DSR2H	3,170	51,947	158,536	6,598,767	240	1,068	360	1,601	N/A	N/A	460	2,046
TSR2	3,526	57,781	169,988	7,075,435	295	1,312	442	1,966	N/A	N/A	566	2,518
TSR2H	3,870	63,418	190,080	7,911,727	288	1,281	432	1,922	N/A	N/A	552	2,455
TSR3	4,239	69,465	207,666	8,643,712	360	1,601	540	2,402	N/A	N/A	690	3,069
TD	4,404	72,169	396,300	16,495,251	540	2,402	540	2,402	720	3,203	690	3,069
DDR1	4,408	72,234	408,426	16,999,974	266	1,183	266	1,183	354	1,575	334	1,486
TSR3H	4,755	77,920	237,804	9,898,150	360	1,601	540	2,402	N/A	N/A	690	3,069
DDR1H	4,762	78,035	444,978	18,521,383	258	1,148	258	1,148	342	1,521	320	1,423
QSR4	5,652	92,620	276,888	11,524,949	480	2,135	720	3,203	N/A	N/A	920	4,092
QD	5,872	96,225	528,400	21,993,669	720	3,203	720	3,203	960	4,270	920	4,092
DDR2	5,880	96,356	552,652	23,003,113	360	1,601	360	1,601	480	2,135	460	2,046
QSR4H	6,340	103,894	317,072	13,197,533	480	2,135	720	3,203	N/A	N/A	920	4,092
DDR2H	6,588	107,958	625,756	26,045,931	360	1,601	360	1,601	480	2,135	460	2,046
TDR2	7,348	120,412	684,752	28,501,530	446	1,984	446	1,984	594	2,642	566	2,518
TDR2H	8,056	132,014	757,856	31,544,348	436	1,939	436	1,939	582	2,589	552	2,455
TDR3	8,820	144,534	828,978	34,504,669	540	2,402	540	2,402	720	3,203	690	3,069
TDR3H	9,882	161,937	938,634	39,068,897	540	2,402	540	2,402	720	3,203	690	3,069
QDR4	11,760	192,712	1,105,304	46,006,226	720	3,203	720	3,203	960	4,270	920	4,092
QDRH	13,176	215,916	1,251,512	52,091,862	720	3,203	720	3,203	960	4,270	920	4,092

NOTE: Transom seats are limited to 44 kips (196 kN) for the AB701 and 66 kips (294 kN) on the AB702. For high volumes of heavy transom seat loads, reduce the allowable transom seat load by a factor of 0.75.

R. 2

ACROW BRIDGE
Building Bridges.
Connecting People.

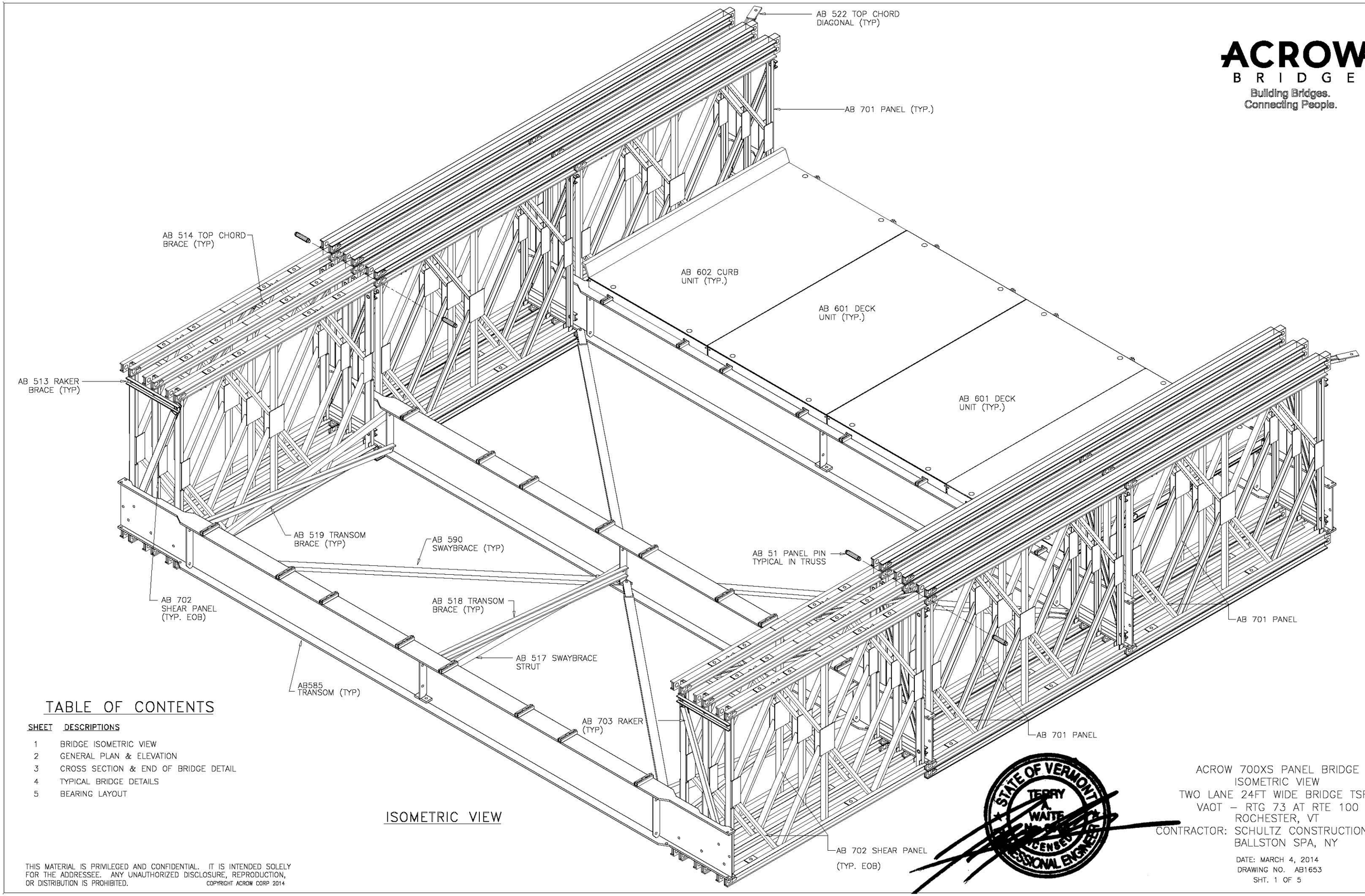

ISOMETRIC VIEW

TABLE OF CONTENTS

SHEET	DESCRIPTIONS
1	BRIDGE ISOMETRIC VIEW
2	GENERAL PLAN & ELEVATION
3	CROSS SECTION & END OF BRIDGE DETAIL
4	TYPICAL BRIDGE DETAILS
5	BEARING LAYOUT

STATE OF VERMONT
TERRY A. WAITE
No. [illegible]
LICENSED
PROFESSIONAL ENGINEER

ACROW 700XS PANEL BRIDGE
ISOMETRIC VIEW
TWO LANE 24FT WIDE BRIDGE TSR3
VAOT – RTG 73 AT RTE 100
ROCHESTER, VT
CONTRACTOR: SCHULTZ CONSTRUCTION, INC.
BALLSTON SPA, NY

DATE: MARCH 4, 2014
DRAWING NO. AB1653
SHT. 1 OF 5

THIS MATERIAL IS PRIVILEGED AND CONFIDENTIAL. IT IS INTENDED SOLELY FOR THE ADDRESSEE. ANY UNAUTHORIZED DISCLOSURE, REPRODUCTION, OR DISTRIBUTION IS PROHIBITED.
COPYRIGHT ACROW CORP 2014

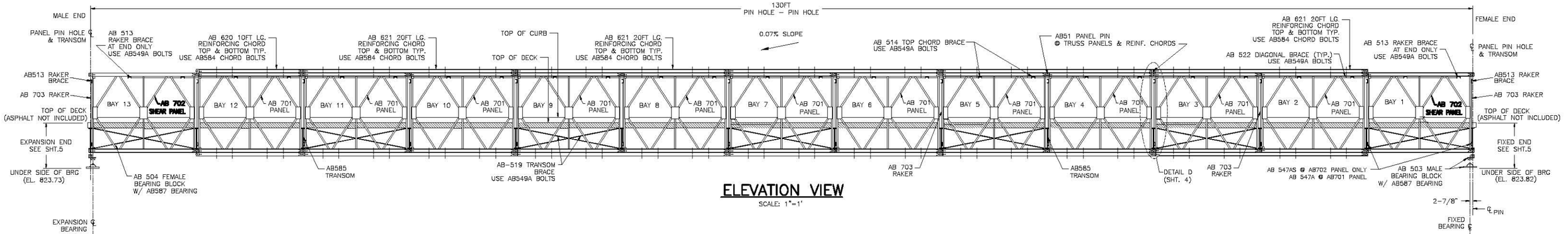

ELEVATION VIEW

SCALE: 1"=1'

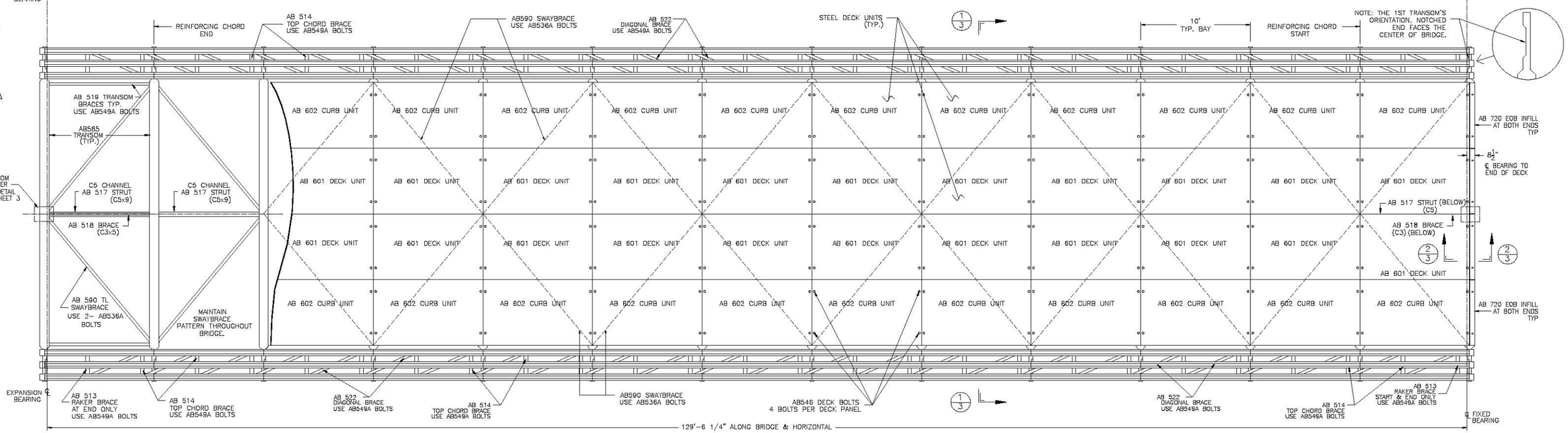

PLAN VIEW

INFORMATION DISCLOSED HEREIN IS THE PROPERTY OF ACROW CORPORATION OF AMERICA. THIS MATERIAL IS PRIVILEGED AND CONFIDENTIAL. IT IS INTENDED SOLELY FOR THE ADDRESSEE. ANY UNAUTHORIZED DISCLOSURE, REPRODUCTION, OR DISTRIBUTION IS PROHIBITED. DUPLICATION OF ANY PORTION OF THIS DATA SHALL INCLUDE THIS LEGEND. COPYRIGHT ACROW CORP 2014

BRIDGE BOLTS

BOLT	NAME	DIA ø	UNDER HEAD LENGTH ±1/8"	TORQUE (FT/LBS)
AB549A	SHORT BRACE BOLT	1"	2–5/8"	450
AB548A	LONG RAKER BOLT	1"	3–7/8"	450
AB547AS	TRANSOM SHEAR BOLT	1"	5–1/2"	450
AB547A	TRANSOM BOLT	1"	4–1/8"	450
AB546	DECK T BOLT	3/4"	N/A	110
AB536A	BRACE BOLT	1"	3–3/8"	450
AB584	CHORD BOLT	1–1/4"	3–1/2"	650

SHAPE OF DIAGONALS

AB701 PANELS – CHANNELS

AB702 PANELS – TUBES

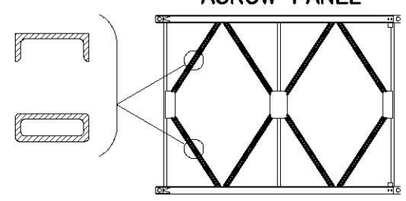

ACROW PANEL

REV.	DATE	DESCRIPTION	BY	APPR.

SEAL

STATE OF VERMONT – TERRY A. WAITE – LICENSED PROFESSIONAL ENGINEER

ACROW BRIDGE

Building Bridges. Connecting People.

Acrow Corporation of America
181 New Road, Parsippany, NJ 07054

ACROW 700XS PANEL BRIDGE
PLAN & ELEVATION
130FT x 2 LANE 24FT TSR3 BRIDGE
VAOT – RTG73 AT RTE 100
ROCHESTER, VT

DRAWN BY AC	DATE MARCH 4, 2014		CONTRACT NO.
CHECKED BY ZW	SCALE: AS SHOWN		
APPROVED BY SP			
SCHULTZ CONSTRUCTION, INC. BALLSTON SPA, NY	DRAWING NO. AB1653		REV.
	SHT 2 OF 5		

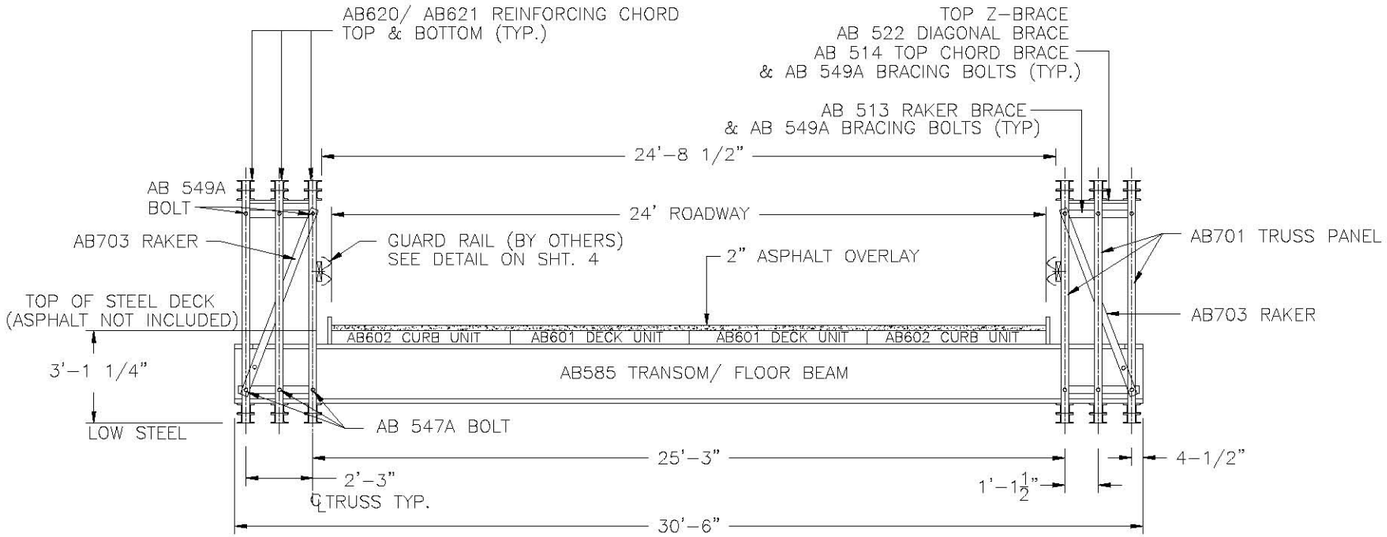

SECTION 1/3 – 1/3

SCALE: 3/16"=1'-0"

GENERAL NOTES

AASHTO LRFD BRIDGE DESIGN SPECIFICATIONS, FOURTH EDITION, 2007 AND CURRENT ADDENDUMS.

LIVE LOAD
HL-93

DEAD LOAD
2" ASPHALT OVERLAY

BRIDGE
(A) PANEL CHORDS, DIAGONALS & VERTICALS, PANEL REINFORCING CHORDS, RAKER
AASHTO M223 Gd 65
(B) DECKING, RAKER BRACE, TRANSOM, TOP CHORD BRACE, SWAYBRACE, TRANSOM BRACE, DIAGONAL CHORD BRACE
AASHTO M223 Gd 50
(C) PANEL PINS
ASTM A 193 Gd B7
(D) BOLTS
AASHTO M164M – A325

FINISH
ALL MAJOR COMPONENTS GALVANIZED TO AASHTO M111-ASTM A123
ALL BOLTS ARE HOT DIPPED GALVANIZED.
PINS ARE ELECTRO GALVANIZED.

LIVE LOAD – HL93

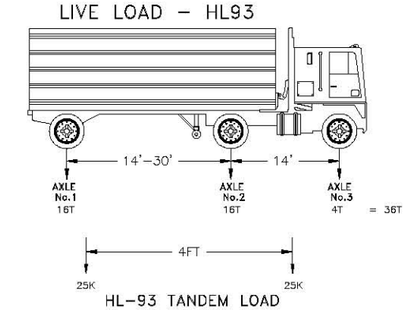

HL-93 TANDEM LOAD

LANE LOAD = .64KLF/ LANE

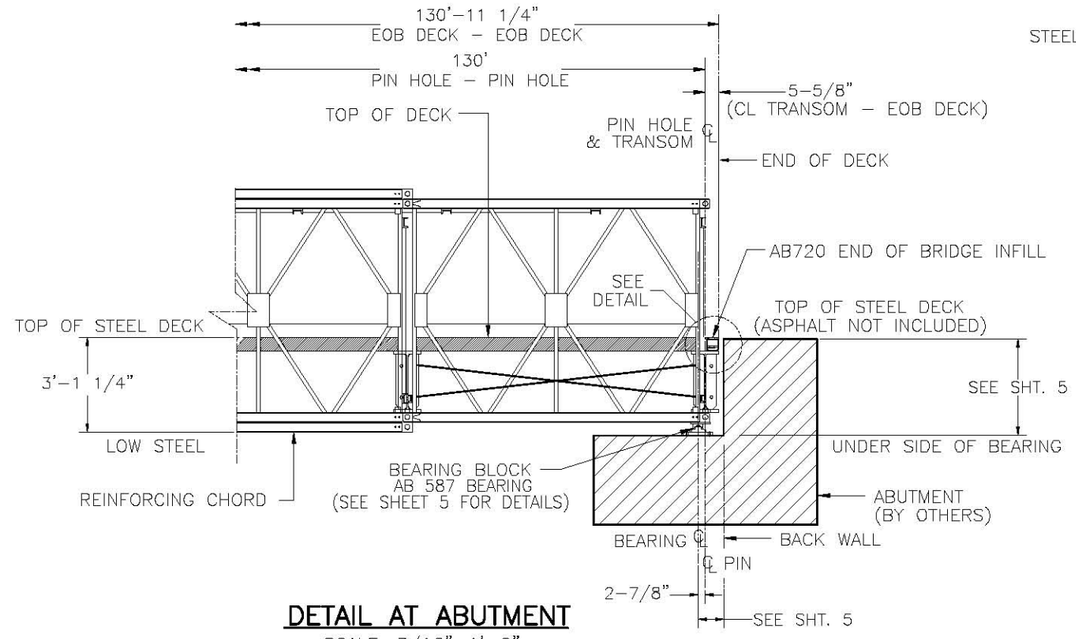

DETAIL AT ABUTMENT

SCALE: 3/16"=1'-0"

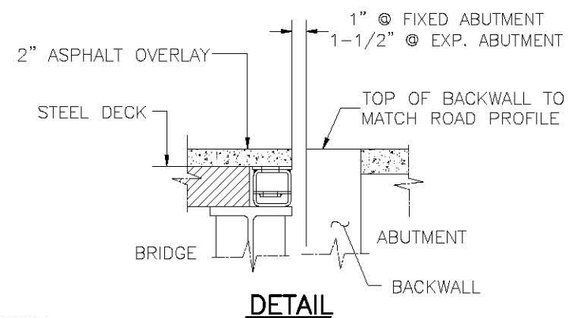

DETAIL

NOTE:
INSTALL BOLSTER AFTER BRIDGE, DECK & OVERLAY IS IN PLACE

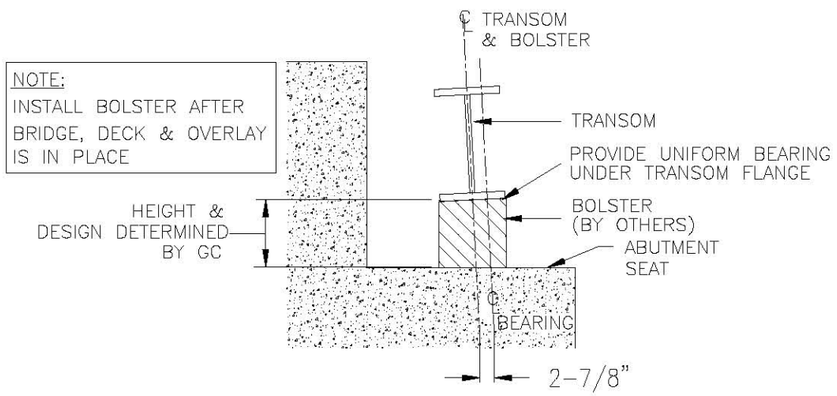

BOLSTER DETAIL 2/3 – 2/3

SCALE: N.T.S.
SEE BEARING LAYOUT FOR LOCATION

NOTE:
- BOLSTER TO BE SECURED FROM MOVEMENT AFTER INSTALLATION
- BOLSTER TO MATCH SLOPE OF TRANSOM FLANGE

INFORMATION DISCLOSED HEREIN IS THE PROPERTY OF ACROW CORPORATION OF AMERICA. THIS MATERIAL IS PRIVILEGED AND CONFIDENTIAL. IT IS INTENDED SOLELY FOR THE ADDRESSEE. ANY UNAUTHORIZED DISCLOSURE, REPRODUCTION, OR DISTRIBUTION IS PROHIBITED. DUPLICATION OF ANY PORTION OF THIS DATA SHALL INCLUDE THIS LEGEND. COPYRIGHT ACROW CORP 2014

REV.	DATE	DESCRIPTION	BY	APPR.

SEAL

STATE OF VERMONT
TERRY A. WAITE
No. 9[illegible]
LICENSED
PROFESSIONAL ENGINEER

ACROW BRIDGE
Building Bridges. Connecting People.
Acrow Corporation of America
181 New Road, Parsippany, NJ 07054

ACROW 700XS PANEL BRIDGE
CROSS SECTION & END OF BRIDGE DETAIL
130FT x 2 LANE 24FT TSR3 BRIDGE
VAOT – RTG73 AT RTE 100
ROCHESTER, VT

DRAWN BY AC	DATE MARCH 4, 2014	CONTRACT NO.	
CHECKED BY ZW	SCALE: AS SHOWN		
APPROVED BY SP			

SCHULTZ CONSTRUCTION, INC.
BALLSTON SPA, NY

DRAWING NO. AB1653 REV.
SHT 3 OF 5

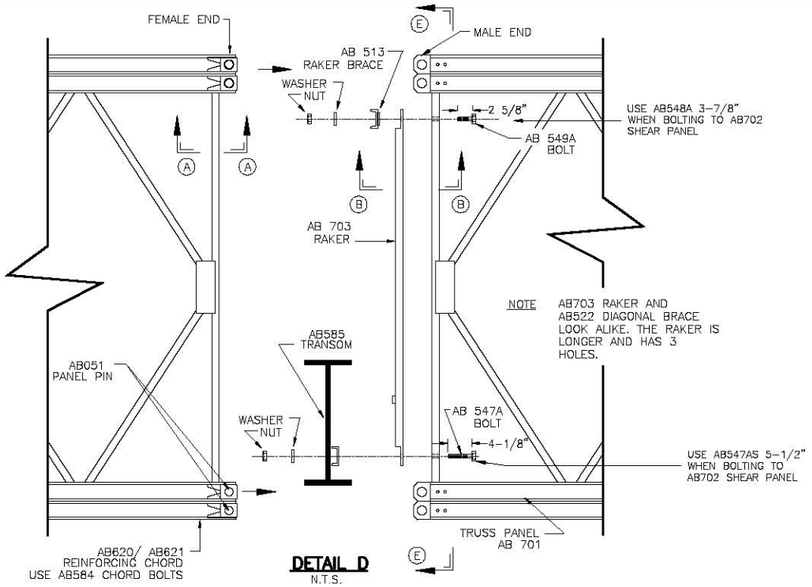

DETAIL D
N.T.S.

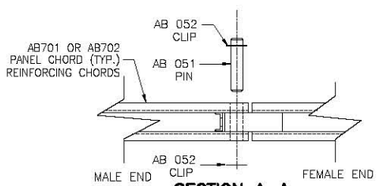

SECTION A–A
N.T.S.

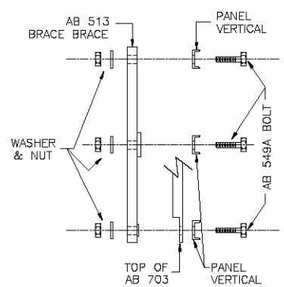

SECTION B–B
N.T.S.

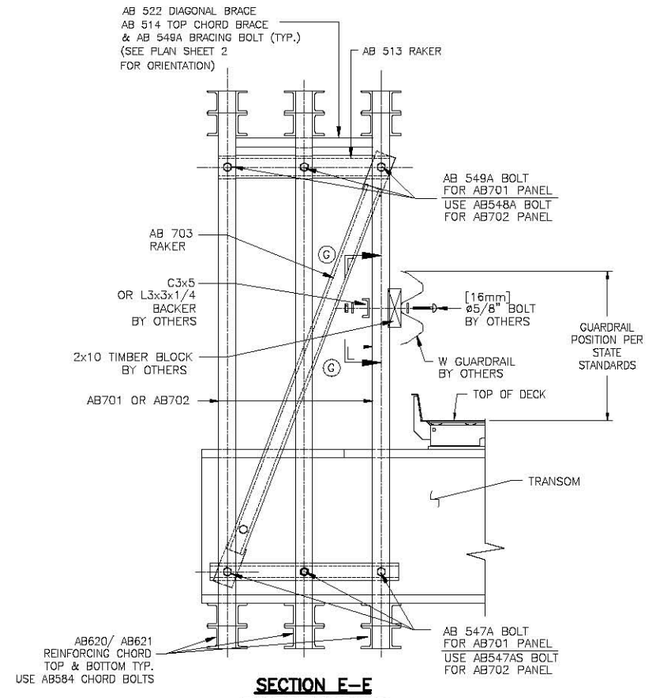

SECTION E–E
BOLT LOCATIONS
N.T.S.

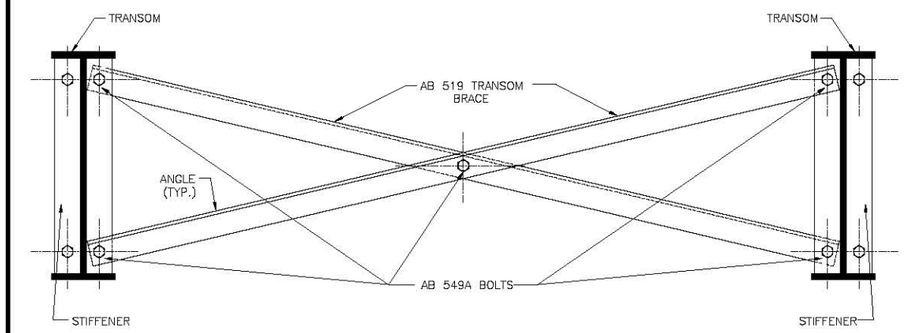

NOTE: THESE BRACES ARE BETWEEN EVERY OTHER PAIR OF TRANSOMS,
(SEE ELEVATION SHEET 2 FOR LOCATIONS)

DETAIL – TRANSOM BRACES
N.T.S.

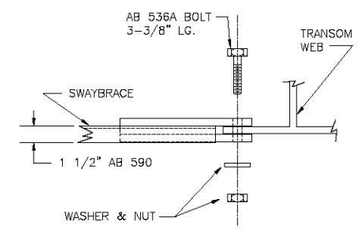

SECTION F–F
N.T.S.

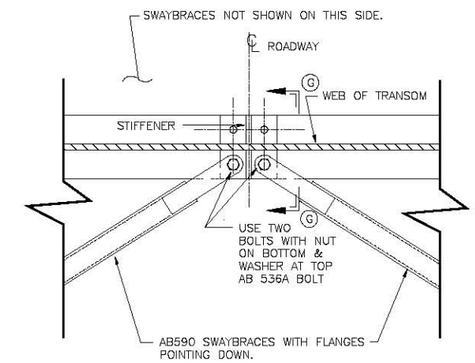

SWAYBRACE CENTER CONNECTION DETAIL
N.T.S.

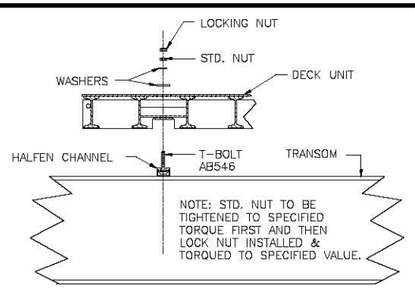

DECK CONNECTION DETAIL
N.T.S.

NOTE:
ALL GUARDRAIL MATERIAL BY OTHERS.

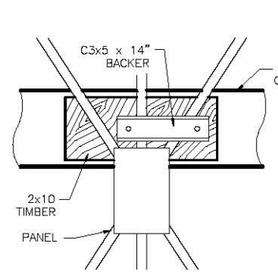

GUARDRAIL DETAIL @ PANEL MIDDLE

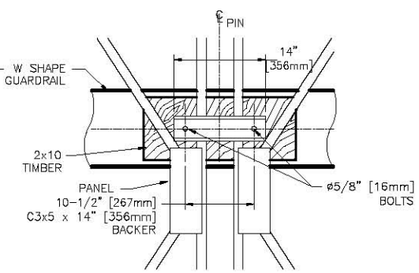

GUARDRAIL DETAIL @ PANEL PIN JOINT

SECTION G–G

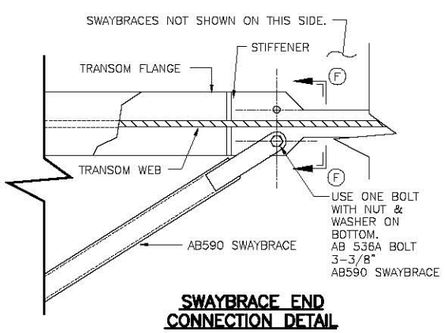

SWAYBRACE END
CONNECTION DETAIL
N.T.S.

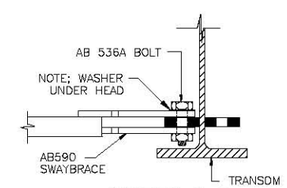

SECTION G–G
SWAYBRACE CONNECTION DETAIL
AT CENTER POINT
N.T.S.

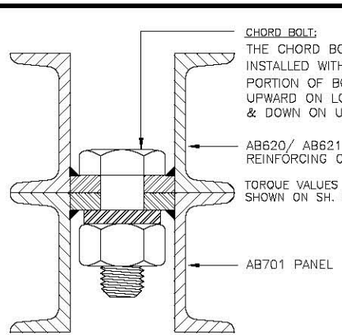

CHORD BOLT CONNECTION DETAIL
SCALE: N.T.S.

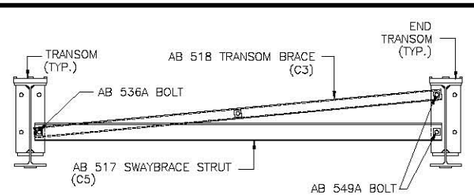

END OF BRIDGE – FEMALE END
(CENTER OF TRANSOM)

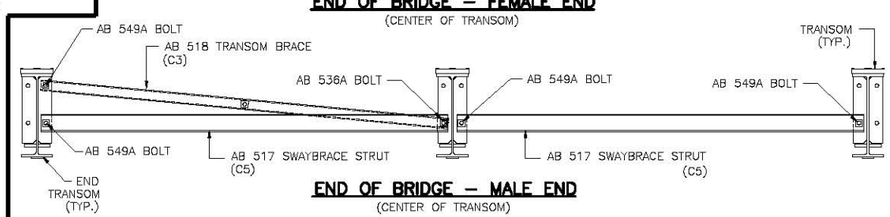

END OF BRIDGE – MALE END
(CENTER OF TRANSOM)

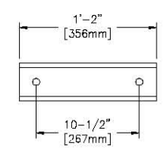

C3x5 BACKER
BY OTHERS

INFORMATION DISCLOSED HEREIN IS THE PROPERTY OF ACROW CORPORATION OF AMERICA. THIS MATERIAL IS PRIVILEGED AND CONFIDENTIAL. IT IS INTENDED SOLELY FOR THE ADDRESSEE. ANY UNAUTHORIZED DISCLOSURE, REPRODUCTION, OR DISTRIBUTION IS PROHIBITED. DUPLICATION OF ANY PORTION OF THIS DATA SHALL INCLUDE THIS LEGEND. COPYRIGHT ACROW CORP 2014

REV.	DATE	DESCRIPTION	BY	APPR.

SEAL

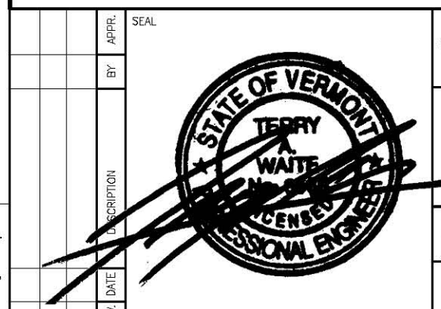

ACROW BRIDGE
Building Bridges.
Connecting People.
Acrow Corporation of America
181 New Road, Parsippany, NJ 07054

ACROW 700XS PANEL BRIDGE
TYPICAL BRIDGE DETAILS
130FT x 2 LANE 24FT TSR3 BRIDGE
VAOT – RTG 73 AT RTG 100
ROCHESTER, VT

DRAWN BY AC	DATE MARCH 4, 2014		CONTRACT NO.
CHECKED BY ZW	SCALE: AS SHOWN		
APPROVED BY SP			
SCHULTZ CONSTRUCTION, INC. BALLSTON SPA, NY	DRAWING NO. AB1653		REV.
	SHT 4 OF 5		

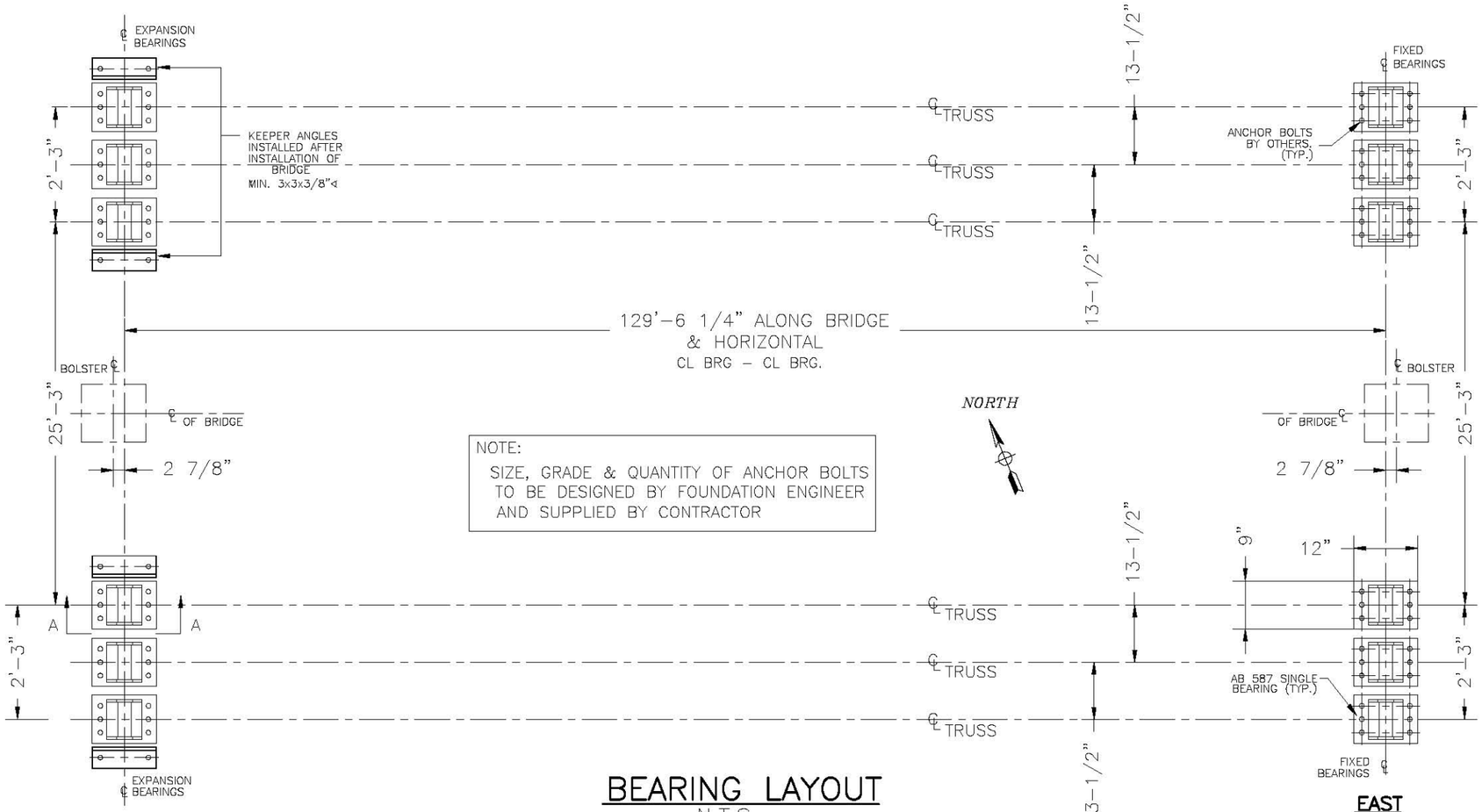

BEARING LAYOUT
N.T.S.

WEST ABUTMENT

EAST ABUTMENT

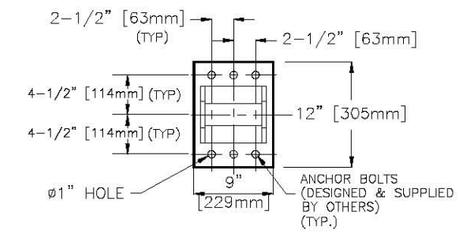

FIXED END - BEARING DETAIL
SCALE: N.T.S.

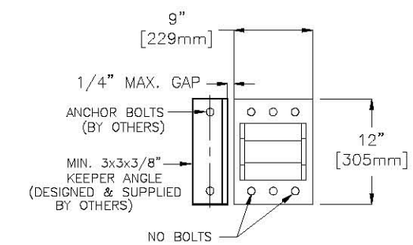

EXPANSION END - BEARING DETAIL
SCALE: N.T.S.

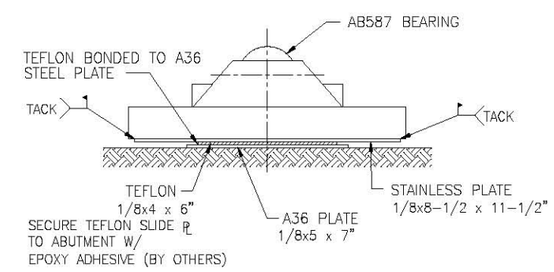

EXPANSION BEARING ELEVATION VIEW A-A
ANGLE NOT SHOWN FOR CLARITY

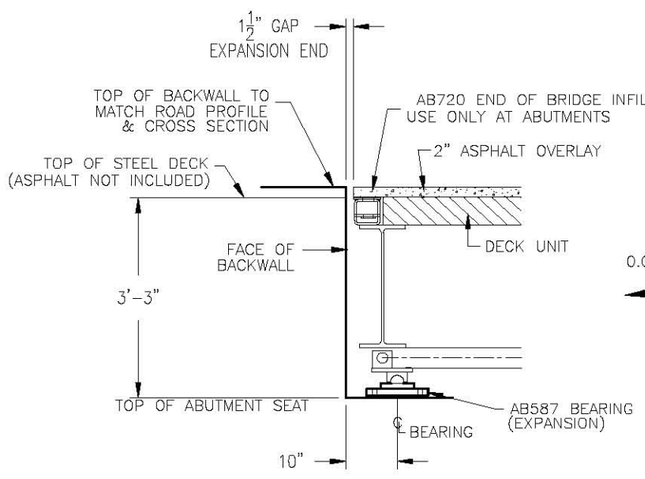

EXP. END - WEST ABUTMENT
SCALE: N.T.S.

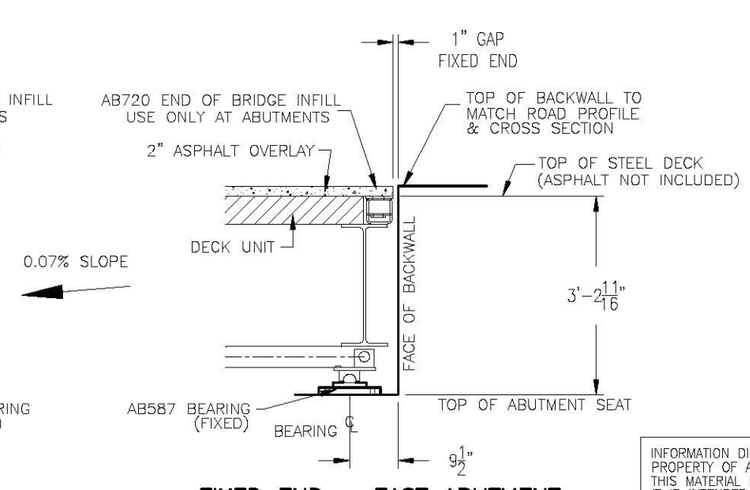

FIXED END - EAST ABUTMENT
SCALE: N.T.S.

INFORMATION DISCLOSED HEREIN IS THE PROPERTY OF ACROW CORPORATION OF AMERICA. THIS MATERIAL IS PRIVILEGED AND CONFIDENTIAL. IT IS INTENDED SOLELY FOR THE ADDRESSEE. ANY UNAUTHORIZED DISCLOSURE, REPRODUCTION, OR DISTRIBUTION IS PROHIBITED. DUPLICATION OF ANY PORTION OF THIS DATA SHALL INCLUDE THIS LEGEND. COPYRIGHT ACROW CORP 2014

REV.	DATE	DESCRIPTION	BY	APPR.

SEAL

STATE OF VERMONT
TERRY A. WAITE
LICENSED PROFESSIONAL ENGINEER

ACROW BRIDGE
Building Bridges. Connecting People.
Acrow Corporation of America
181 New Road, Parsippany, NJ 07054

ACROW 700XS PANEL BRIDGE
BEARING LAYOUT
130FT x 2 LANE 24FT TSR3 BRIDGE
VAOT - RTG73 AT RTE 100
ROCHESTER, VT

DRAWN BY AC	DATE MARCH 4, 2014		CONTRACT NO.
CHECKED BY ZW	SCALE: AS SHOWN		
APPROVED BY SP			
SCHULTZ CONSTRUCTION, INC. BALLSTON SPA, NY	DRAWING NO. AB1653		REV.
	SHT 5 OF 5		