H.B. FLEMING, INC.

CONTRACTING · ENGINEERING

89 Pleasant Ave. South Portland, ME 04106

Phone 207-799-8514 Fax 207-799-8538

www.hbfleming.com

PILE DRIVING BRIDGES SUBMARINE PIPELINES

SUBMITTAL

Submitted To:
Client: W.M. Schults Construction
Attention: Kevin Ture

Date: 4/30/14
Project: Rt. 73 bridge 19
Location: Rochester, VT

Subject: Pile Driving Criteria

H.B. Fleming Proposes to use the following driving criteria for the piles to be installed at the above location.

Hammer

- An APE D19-42 single acting open ended diesel pile hammer will be used to drive the piles. The D19 has a ram weight of 4,200 Lbs, a max stroke of 10'-6", and a rated energy of 42,000 ft-lbs
- The D19 uses a Monocast MC 901 pile cushions.

Pile

- HP 12x84 ASTM A572 Gr. 50 pile
- The Ultimate capacity is 205 tons.
- Piles will be fitted with cast steel points

Results

- Piles will be driven until a blow count of 6 blows per inch for six consecutive inches is obtained.
- These criteria are based upon the output generated from the WEAP analysis that follows.

Signed: _____

John Linscott IV "Scotty"

H.B. FLEMING PILE EQUIPMENT DATA SHEET

Project: Rt. 73, Bridge 19
Location: Rochester, VT

Date: 5/2/2014
Client: W.M. Schultz

HAMMER

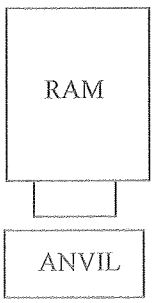

Manufacturer:	MKT
Model:	DE-42
Type:	Single Acting Diesel
Length of Stroke:	10' - 6"
Rated Energy at Given Stroke:	42,000 ft-lb
Modifications:	None

HAMMER CUSHION

Material:	Monocast MC901
Thickness:	2"
Area:	283.5 in^2
Modulus of Elasticity:	285 psi
Coefficient of Restitution:	0.8

DRIVE HEAD

Weight:	1200 lb

PILE CUSHION

Cushion Material:	N/A
Thickness:	N/A
Modulus of Elasticity:	N/A
Coefficient of Restitution:	N/A

PILE

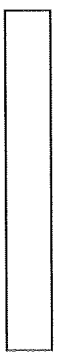

Pile Type:	HP 12x84
Length in Leads:	Up to 65'
Weight/LF:	84 lb
Wall Thickness:	.685"
Taper:	N/A
Cross Sectional Area:	25.5 in^2
Ultimate Capacity	205 tons
Splice Description:	Full Penetration Butt Weld
Tip Treatment Description:	Cast Steel Point

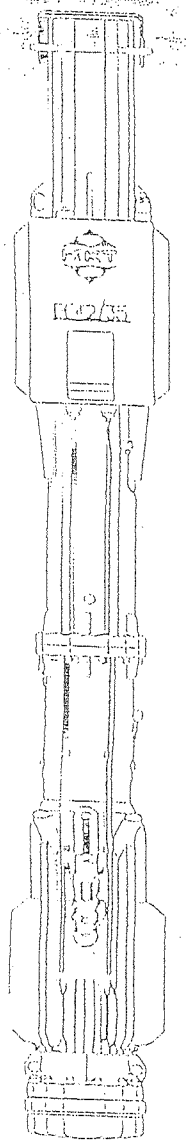

INTRODUCING THE NEW

DE42/35

MAXIMUM DIESEL HAMMER FLEXIBILITY FITTING IN 8 x 20 LEADS WITH RAM WEIGHTS TO 4,200 LBS.

ONE HAMMER... MULTIPLE RAM SIZES... AND ENERGY RANGES. ANOTHER MKT FIRST PROVIDING THE CONTRACTOR WITH HAMMER SIZE FLEXIBILITY AND REDUCED EQUIPMENT INVESTMENT COSTS. MKT DIESEL HAMMERS CONTINUE TO OFFER FEATURES WHICH INSURE DEPENDABLE AND PRODUCTIVE OPERATION. USING EITHER STANDARD OR REMOTE FUEL DELIVERY SYSTEMS.

SPECIFICATIONS DE-42/35		
RAM-PISTON WEIGHT (LBS.)	3,500	4,200
ENERGY RATING (FT.LBS.)	35,000	42,000
BEARING BASED ON ENGINEERING NEWS FORMULA (TONS)	190	230
MAXIMUM OBTAINABLE STROKE	10'-6"	10'-6"
OVERALL LENGTH WITH DRIVE CAP	16'-2"	16'-7"
WEIGHT, HAMMER ONLY (LBS.)	8,600	9,300
WEIGHT, HAMMER AND UNIVERSAL DRIVE CAP (LBS.)	9,550	10,250

PUBLISHED ENERGY RATINGS ARE EQUAL TO RAM WEIGHT X 10.0 FT. RAM STROKE. ACTUAL ENERGIES DELIVERED ARE A FUNCTION OF THE OVERALL JOB CONDITIONS. BEARING RATINGS ARE BASED UPON ENGINEERING NEWS FORMULA, PILE SET EQUAL TO 0.1 IN./BLOW.

PRODUCT LIST

- SINGLE ACTING DIESEL PILE HAMMERS
- AIR PILE HAMMERS
- VIBRATORY PILE DRIVERS/EXTRACTORS
- VIBRATORY HAMMER ACCESSORIES
- PILE DRIVING LEAD SYSTEMS
- CUSTOM ENGINEERED PRODUCTS
- DOUBLE ACTING DIESEL PILE HAMMERS
- DRIVE CAPS AND ACCESSORIES
- HYDRAULIC POWER UNITS
- HYDRAULIC AUGER SYSTEMS
- BOTTOM BRACES
- LEAD ACCESSORIES

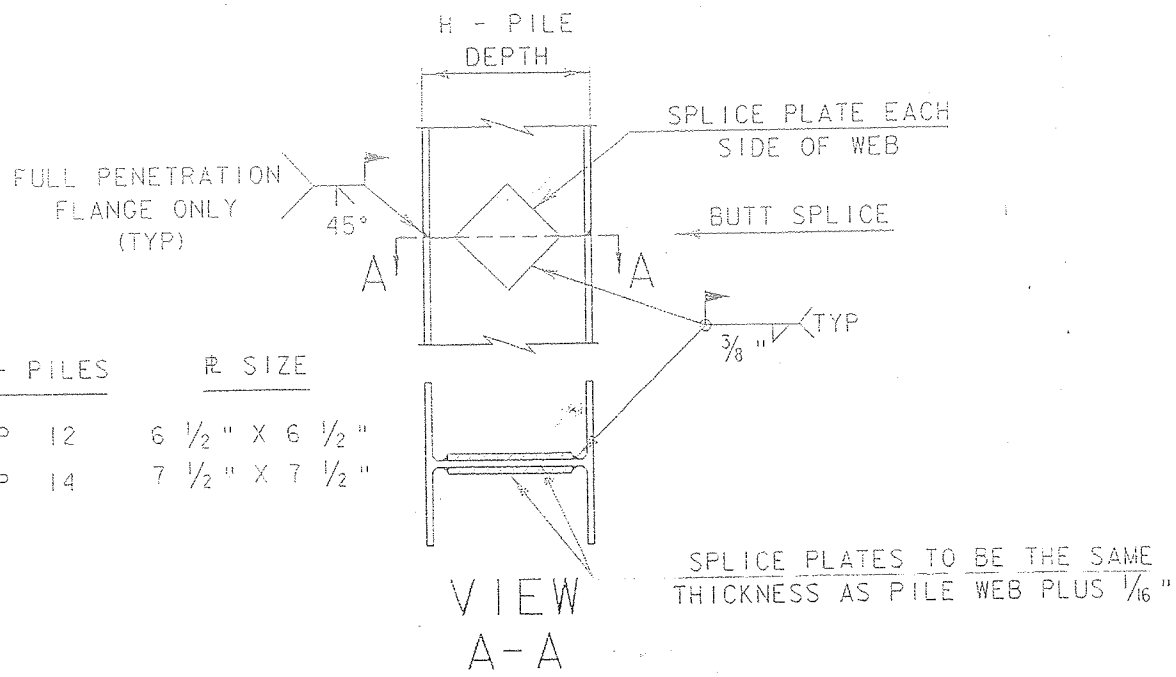

H - PILES	PL SIZE
HP 12	6 1/2" X 6 1/2"
HP 14	7 1/2" X 7 1/2"

DETAIL OF PILE SPLICE

NOT TO SCALE

HARD-BITE

Dimensions

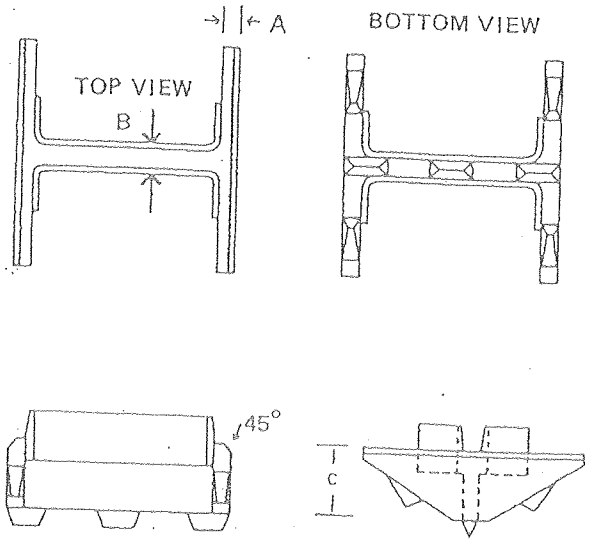

Material Cast Steel

ASTM A27 65/35 - Heat Treated

	8"	10"	12"	14"
A	5/8"	3/4"	3/4"	1"
B	5/8"	3/4"	3/4"	1"
C	2-1/2"	3"	3-1/2"	4"

Installation Instructions

HARD-BITE POINT MODEL HP–77750-B

1. Fit point onto the end of a square cut pile end.
2. Weld point to the pile in either flat or vertical position using E60 or E70XX electrodes.
3. Weld across full width of flange following chart below for minimum size weld.

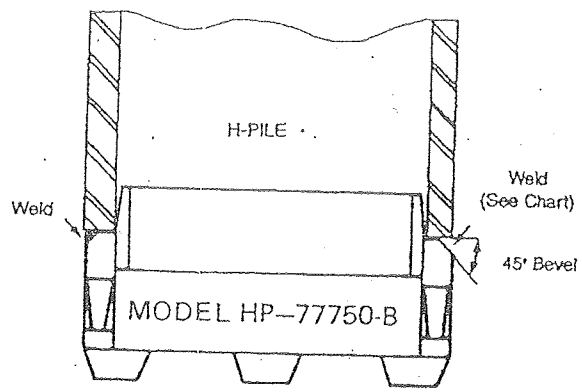

Pile Size	Flange Thickness	Min. Size Groove Weld
HP 14 x 117	.805	7/16
x 102	.705	3/8
x 89	.615	3/8
x 73	.505	5/16
HP 12 x 84	.685	3/8
x 74	.610	3/8
x 63	.515	5/16
x 53	.435	5/16
HP 10 x 57	.565	5/16
x 42	.420	5/16
HP 8 x 36	.445	5/16

Call toll free 800-526-9047

ASSOCIATED PILE & FITTING CORP.

BOX 1048, CLIFTON, NJ 07014 ■ 973-773-8400 ■ FAX # 973-773-8442

MKT DE-42 ~~Ultimate~~ Capacity Variable

H.B. Fleming
Enter Project Title Here

02-May-2014
GRLWEAP (TM) Version 2005

Ultimate Capacity kips	Maximum Compression Stress ksi	Maximum Tension Stress ksi	Blow Count blows/in	Stroke ft	Energy kips-ft
370.0	35.63	1.89	4.4	10.00	21.58
380.0	36.07	2.03	4.6	10.00	21.56
390.0	36.47	2.12	4.8	10.00	21.56
400.0	36.81	2.23	5.1	10.00	21.55
409.0	37.18	2.31	5.3	10.00	21.55
420.0	37.55	2.41	5.5	10.00	21.53
430.0	37.84	2.47	5.8	10.00	21.53
440.0	38.16	2.46	6.1	10.00	21.52
450.0	38.49	2.43	6.3	10.00	21.51
460.0	38.76	2.41	6.6	10.00	21.49

MKT DE-42 ~~CONSTANT~~ CAPACITY
VARIABLE

H.B. Fleming
Enter Project Title Here

02-May-2014
GRLWEAP (TM) Version 2005

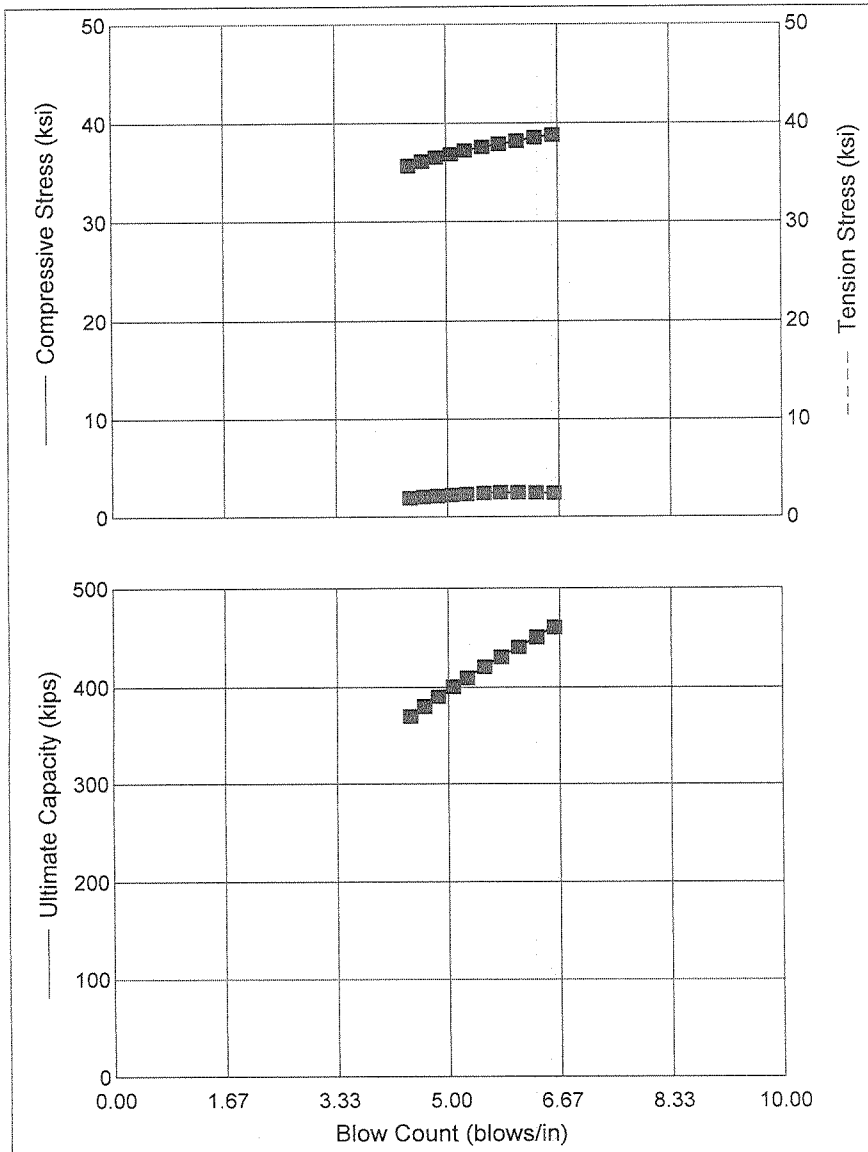

MKT DE 42/35

Stroke	10.00	ft
Efficiency	0.800	
Helmet	1.20	kips
Hammer Cushion	17719	kips/in
Skin Quake	0.100	in
Toe Quake	0.040	in
Skin Damping	0.050	sec/ft
Toe Damping	0.150	sec/ft
Pile Length	65.00	ft
Pile Penetration	65.00	ft
Pile Top Area	24.60	in2

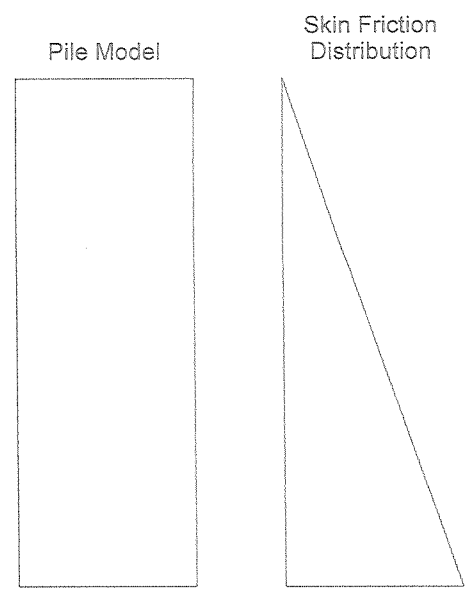

Res. Shaft = 22 %
(Proportional)

MKT DE-42 CONSTANT CAPACITY

H.B. Fleming
Enter Project Title Here

02-May-2014
GRLWEAP (TM) Version 2005

Ultimate Capacity kips	Maximum Compression Stress ksi	Maximum Tension Stress ksi	Blow Count blows/in	Stroke ft	Energy kips-ft
409.0	17.13	0.88	602.7	3.38	4.74
409.0	22.54	0.99	25.8	4.50	7.50
409.0	26.49	1.15	13.3	5.62	10.24
409.0	29.70	1.30	9.3	6.75	13.01
409.0	32.57	1.59	7.3	7.88	15.97
409.0	34.99	1.99	6.1	9.00	18.93
409.0	37.41	2.35	5.2	10.12	21.88
409.0	39.50	1.93	4.5	11.25	24.83
409.0	41.50	2.08	4.0	12.38	27.78
409.0	43.42	2.27	3.5	13.50	30.73

MKT DE-42 ~~[illegible]~~ CONSTANT CAPACITY

H.B. Fleming
Enter Project Title Here

02-May-2014
GRLWEAP (TM) Version 2005

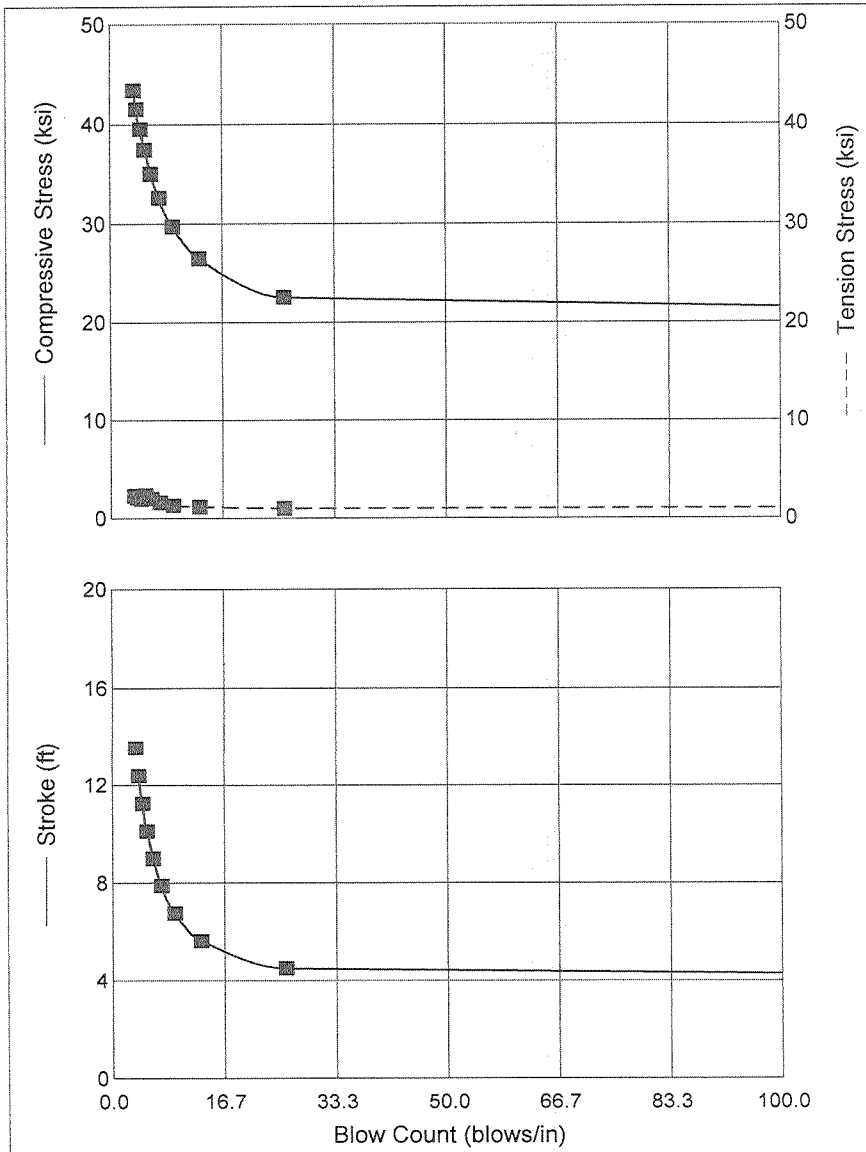

MKT DE 42/35

Capacity	409.0	kips
Efficiency	0.800	
Helmet	1.20	kips
Hammer Cushion	17719	kips/in
Skin Quake	0.100	in
Toe Quake	0.040	in
Skin Damping	0.050	sec/ft
Toe Damping	0.150	sec/ft
Pile Length	65.00	ft
Pile Penetration	65.00	ft
Pile Top Area	24.60	in2

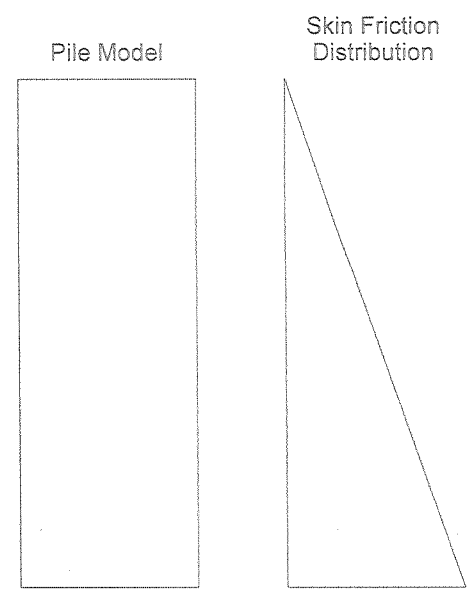

Res. Shaft = 22 %
(Proportional)