Drawing Sheet : BR16-01				BAR LIST													
Bar Mark	Qty	Size	Total Length	Type	'A'	'B'	'C'	'D'	'E'	'F'	'G'	'H'	'J'	'K'	'L'	'M'	'N'
5A01	4	#5	5'-8"	17		2'-2"	3'-6"										
5A02	4	#5	5'-4"	17		2'-2"	3'-2"										
5A04	4	#5	5'-5"	17		2'-2"	3'-3"										
5A03	4	#5	5'-7"	17		2'-2"	3'-5"										

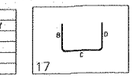

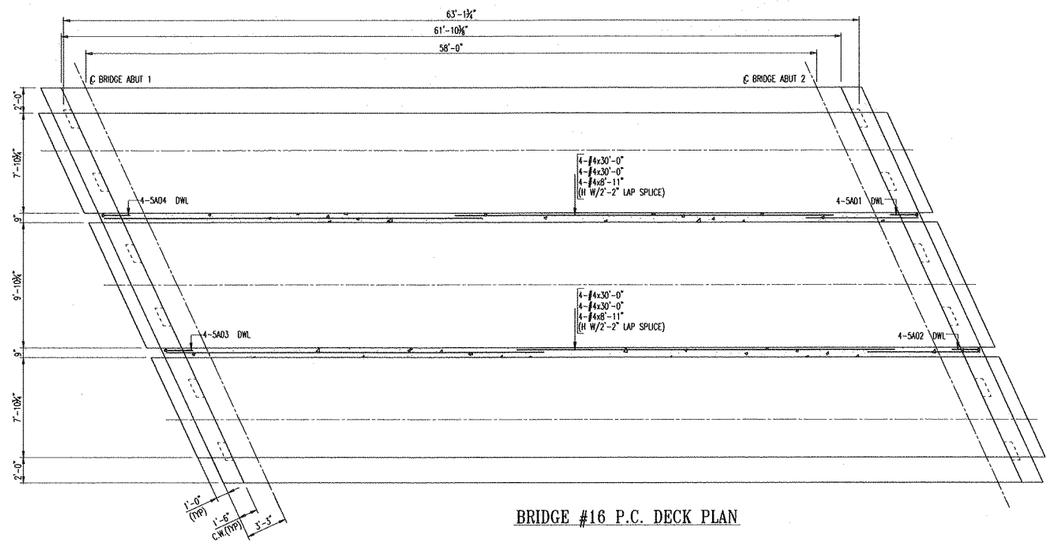

BRIDGE #16 P.C. DECK PLAN

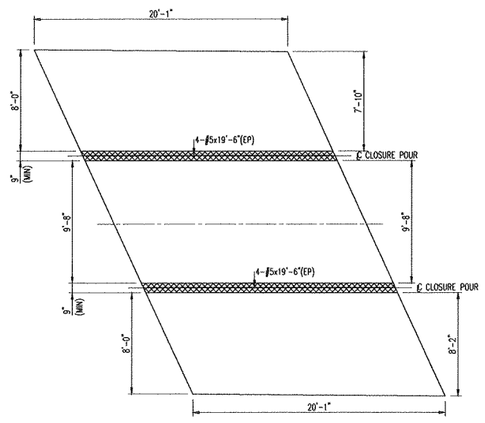

APP. SLAB #1 REINF. PLAN

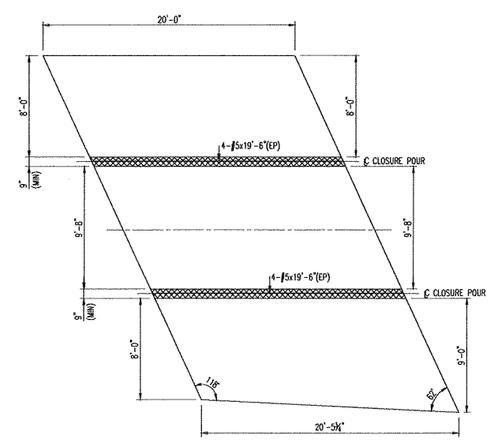

APP. SLAB #2 REINF. PLAN

ALL MTRL. ON APP. SLAB NOTED W/ (EP) SHALL BE ASTM A775 GRADE 60 "EPOXY COATED" U.N.O.

ALL MTRL. ON DECK CLOSURE POUR TO BE DUAL COATED REINF.

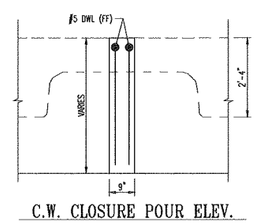

C.W. CLOSURE POUR ELEV.

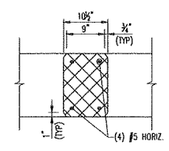

APP. SLAB C.P. DETAIL

LAP CHART-U.N.O.

#11	100"	71"
#10	85"	58"
#9	67"	46"
#8	55"	38"
#7	35"	29"
#6	29"	20"
#5	22"	16"
#4	16"	11"
#3	13"	12"
SIZE	TOP BARS ★	OTHER BARS

★ -Top bars are horiz. bars with more than 12" of concrete cast below the bars.

No.	Description	Date	By
0	SENT FOR APPROVAL	05/07/2014	MAD

Revisions and Issue Record

The full intent and purpose of this drawing is the placing of reinforcing steel bars ONLY. It is NOT to be used as a means of communication between the Architect, Engineer, Contractor or any other Sub-trades.

THIS DRAWING IS NOT TO BE SCALED.

Harris Rebar Harter Steel — National Strength. Local Service.

DETAILED AT: MILFORD MASSACHUSETTS

Project: BRF 0162 VT RTE 73 & 100 ROCHESTER, VT

Drawing: BR # 16 CLOSURE POUR REINF.

Customer: W.M. SCHULTZ CONSTRUCTION, INC.

Engineer: VANASSE HANGEN BRUSTLIN, INC.

Refer to Release:

Date	Drawn	Chkd.	JOB No.	Dwg. No.
05/07/2014	MAD	JOE	33505211	BR16-01

W:\Melissa Proj. Folder\33505211-W.M. Schultz Const.-Rochester Bridge\Placing Drawings\DWGs\16-R04.dwg

Harris Rebar
5/9/2014

BRF 0162 VT RTE 73 & 100, ROCHESTER, VT
JOB # 33505211

Bid Item #	Description	Weight (lbs)
507.11	Level 1-Epoxy Coated Reinf.	54,898
507.12	Level II-Dual Coated Reinf.	45,092
540.10115	Approach Slab #1 Epoxy BR 15	122
540.10215	Approach Slab #2 Epoxy BR 15	145
540.10116	Approach Slab #1 Epoxy BR 16	162
540.10216	Approach Slab #2 Epoxy BR 16	162
900.64	PS Concrete Next D Beams 28D-DC	1,191
TEMP ABU	Temp Abut 1&2	1,227
ABU12 SUP	Temporary Bridge Supports	842
BR19 SUP	Bridge 19 Supports	941
	Total	102,692