Drawing Sheet : BR16-01					BAR LIST													
Bar Mark	Qty	Size	Total Length	Type	'A'	'B'	'C'	'D'	'E'	'F'	'G'	'H'	'J'	'K'	'U'	'R'
5A01	16	#5	5'-3"	17		2'-2"	3'-1"									

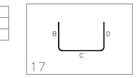

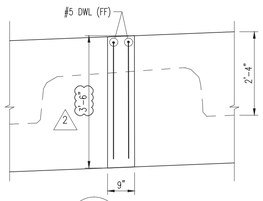

4 BR16-01 SECTION
SCALE: N.T.S.

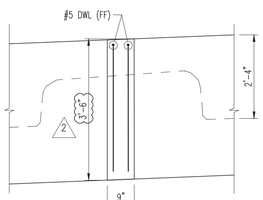

3 BR16-01 SECTION
SCALE: N.T.S.

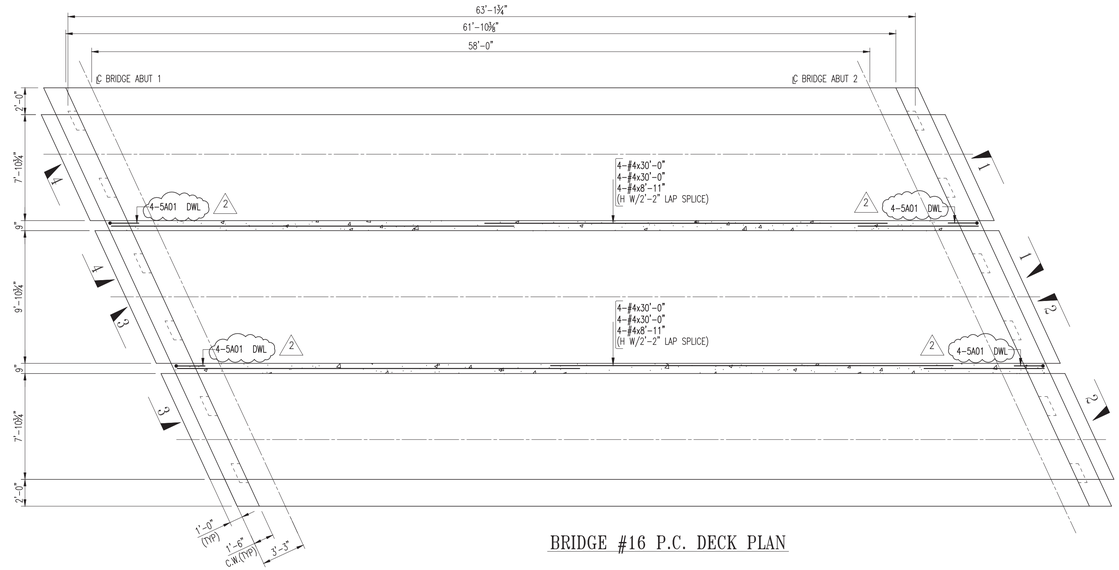

BRIDGE #16 P.C. DECK PLAN

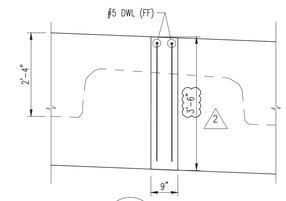

1 BR16-01 SECTION
SCALE: N.T.S.

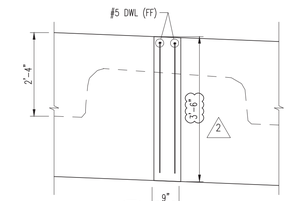

2 BR16-01 SECTION
SCALE: N.T.S.

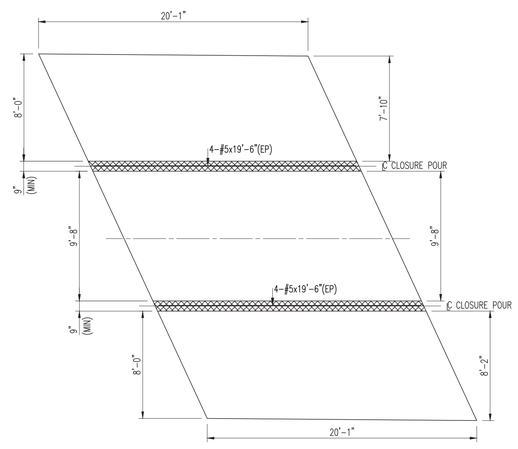

APP. SLAB #1 REINF. PLAN

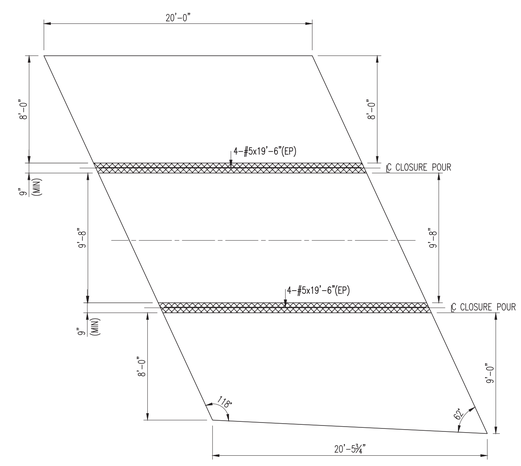

APP. SLAB #2 REINF. PLAN

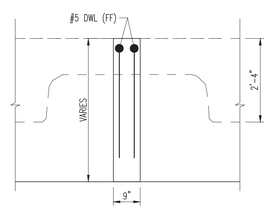

C.W. CLOSURE POUR ELEV.

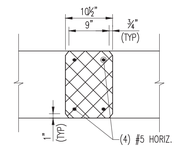

APP. SLAB C.P. DETAIL

Vermont Agency of Transportation
Rochester BRF 0162(17) Rebar (Approved).pdf
RECEIVED
ON: May 28, 2014
and Checked for
CONFORMANCE
BY: Jennifer Fitch DATE: 06/03/2014

SHOP DRAWING REVIEW

☒ REVIEWED AS REQUIRED BY THE CONSTRUCTION CONTRACT DOCUMENTS AND APPROVED, BUT ONLY FOR CONFORMANCE TO THE DESIGN CONCEPT OF THE WORK, AND SUBJECT TO FURTHER LIMITATIONS AND REQUIREMENTS CONTAINED IN THE CONSTRUCTION CONTRACT DOCUMENTS.

☐ REJECTED ☐ REVISE AND RESUBMIT ☐ FURNISH AS CORRECTED

CORRECTIONS OR COMMENTS MADE ON THE SHOP DRAWINGS DURING THIS REVIEW DO NOT RELIEVE CONTRACTOR FROM COMPLIANCE WITH REQUIREMENTS OF THE DRAWINGS AND SPECIFICATIONS. THIS CHECK IS ONLY FOR REVIEW OF GENERAL CONFORMANCE WITH THE DESIGN CONCEPT OF THE PROJECT AND GENERAL COMPLIANCE WITH THE INFORMATION GIVEN IN THE CONTRACT DOCUMENTS. THE CONTRACTOR IS RESPONSIBLE FOR: CONFIRMING AND CORRELATING ALL QUANTITIES AND DIMENSIONS; SELECTING FABRICATION PROCESSES AND TECHNIQUES OF CONSTRUCTION; COORDINATING HIS WORK WITH THAT OF ALL OTHER TRADES; AND PERFORMING HIS WORK IN A SAFE AND SATISFACTORY MANNER.

VHB
Job Number: 51527
Reviewed By: B Masse
Date: 6-3-14

ALL MTRL. ON APP. SLAB NOTED W/ (EP) SHALL BE ASTM A775 GRADE 60 "EPOXY COATED" U.N.O.

ALL MTRL. ON DECK CLOSURE POUR TO BE DUAL COATED REINF.

LAP CHART-U.N.O.

SIZE	TOP BARS ★	OTHER BARS
#11	100"	71"
#10	81"	58"
#9	64"	46"
#8	51"	36"
#7	39"	28"
#6	28"	20"
#5	22"	16"
#4	18"	13"
#3	13"	12"

★ -Top bars are horiz. bars with more than 12" of concrete cast below the bars.

No.	Description	Date	By
2	REV PER JPC REVISED PRECAST DWG 5-29-14	6-2-14	JOE
1	REV. DWGS PER REVISION DWGS	05/27/2014	MAD
0	SENT FOR APPROVAL	05/07/2014	MAD

Revisions and Issue Record

The full intent and purpose of this drawing is the placing of reinforcing steel bars ONLY. It is NOT to be used as a means of communication between the Architect, Engineer, Contractor or any other Sub-trades.

THIS DRAWING IS NOT TO BE SCALED.

HarrisRebar Barker Steel
National Strength. Local Service.

DETAILED AT:
MILFORD
MASSACHUSETTS

Project: BRF 0162 VT RTE 73 & 100
ROCHESTER, VT

Drawing: BR # 16 CLOSURE POUR REINF.

Customer: W.M. SCHULTZ CONSTRUCTION, INC.
Engineer: VANASSE HANGEN BRUSTLIN, INC.
Refer to Release:

Date	Drawn	Chkd.	JOB No.	Dwg. No.
05/07/2014	MAD	JOE	33505211	BR16-01

W:\Melissa Proj: Folder\33505211-W.M. Schultz Const.-Rochester Bridge\Placing Drawings\DWGs\REV#1_16-R04.dwg