To: Mike Garn – Schultz Construction
From: Peter Marcotte, Maine Drilling & Blasting
Date: June 11, 2014
RE: Revised Rock bolt Installation Submittal for Bridge 16 - Rochester, VT

Mike,

To expedite approval of the major portion of this submittal which require approval for material procurement we have elected to isolate the Anchor testing task to a separate document.

We have responded to the Review Comments, our response is in Bold. We will respond to VHB comments 5,6,7,8 in the Anchor testing submittal under a separate cover.

General Notes (from VHB Submittal review June 5 2014)

- VHB 1. In accordance with the Special Provision, a Safety Plan shall be submitted as part of the Work Plan.
    - **MD&B: Please see this information now enclosed. Section "Safety Plan"**

- VHB 2. Personnel Qualifications shall be submitted for approval, in accordance with the Special Provision.
    - **MD&B: Please see this information now enclosed. Section " Qualifications"**

- VHB 3. The proposed bond grout includes the ad-mixture FX-32 Catalytic Agent to reduce the cure time. This admixture is not on the VTrans 2014 Annual Listing of Qualified Products and Materials.
    - **MD&B: We would prefer to use this product over the possibilities listed on the QPL as we have no significant experience with those products. We will do ask that VTrans review and contemplate approval. <u>However if this is not approved by the start of the work in writing we will commit to a proposed grout mix without FX-32CA</u>**

- VHB 4. The proposed grout to fill the anchorage recess is Harris Construction Grout. This grout is not on the VTrans 2014 Annual Listing of Qualified Products and Materials.
    - **MD&B: We have substituted for Sika 212 Product. Cut sheet is now enclosed.**

- VHB 5. The proposed testing method also includes only 1 dial gauge, rather than the 2 required by the Special Provision. Please provide 2 dial gauges.

Maine Drilling & Blasting, Inc.
P.O. Box 1140
423 Brunswick Avenue
Gardiner, ME 04345
207.582.2338
207.582.8794 FAX

Divisional Offices
Connecticut 860.242.7419
Maine 207.582.2338
Massachusetts/RI 508.478.0273
New Hampshire 603.647.0299
New York 518.632.9170
Pennsylvania 800.422.4927
Vermont 802.479.3341

- **MD&B: We will submit details coving the testing scope under a separate submittal**

- VHB 6. The submittal requests a design load (DL) and any lock off loads. The design load and lock-off load shall be 7 kips as noted in the Contract Plans.
  - **MD&B: We will submit details coving the testing scope under a separate submittal**

- VHB 7. Regarding the test load table, due to the relatively small design load required, we are hereby only requiring a test reading at 1.33 x DL (0.25, 0.5, 0.75, 1.0, and 1.2 x DL readings are not required for this project).
  - **MD&B: We will submit details coving the testing scope under a separate submittal**

- VHB 8. Please provide cut sheets and calibration data for proposed Load Cell to be used.
  - **MD&B: We will submit details coving the testing scope under a separate submittal**

- VHB 9. Plastic centralizers shall be used in accordance with the Special Provision.
  - **MD&B: In our experience steel and plastic centralizers are up to contractor to select. In this case, we select steel centralizers which are suited to the anchor type and installation methods and are recommended by the vendor. We need the centralizer to with stand the abrasion of the overburden drilling to ensure annulus for grout flush.**

- VHB 10. Please provide information on the proposed drill rig equipment.
  - **MD&B: The cut sheets are enclosed in Drilling equipment section. This is self-contained hydraulic drill rig with a percussion hammer. They are the type we would typical employ for 2.5" to 4" diameter holes for open hole drilling for tasks such as rock blasting or anchoring. The only modifications will be the addition of the Williams Grout swivel and geobar, these will be substituted for the common drill steel/bits used in open hole drilling techniques.**

- VHB 11. In the Williams "Geo-Drill Injection Anchor System" product information, under the "Limitations of System" section, it is stated that "In hard rock, conventional DTH (down the hole hammers) in open-hole drilling offer a more efficient alternative." Please confirm that this system is suitable for the application of this project.
  - **MD&B: This project is not open hole drilling. The Carbide bit will advance minimum 10 feet into the rock for a bond zone. This system is suitable for this project.**
  - **The previously submitted typical detail had some errors in regards to drill hole diameter citing 4" and 3.5" drill holes. Both locations are now revised to 3". 3" is the product stocked by Williams Form and is adequate to meet 0.5" grout coverage.**

Maine Drilling & Blasting

Index

- Anchor Materials and Typical Detail
- Installation Procedure
- Grout Materials and Equipment
- Installation Logs
- Safety Plan
- Qualifications
- Drilling Equipment
- Federal Highway Administration remarks on Development of an Unbonded Length for Hollow core anchors, courtesy of Williams Form Engineering.
- Anchor Testing Logs and Equipment (Now enclosed in a separate document)

We look forward to working with your team. Please contact us with any questions.

Sincerely,

Maine Drilling & Blasting

Peter Marcotte
Project Engineer

Anchor Materials
&
Typical Detail

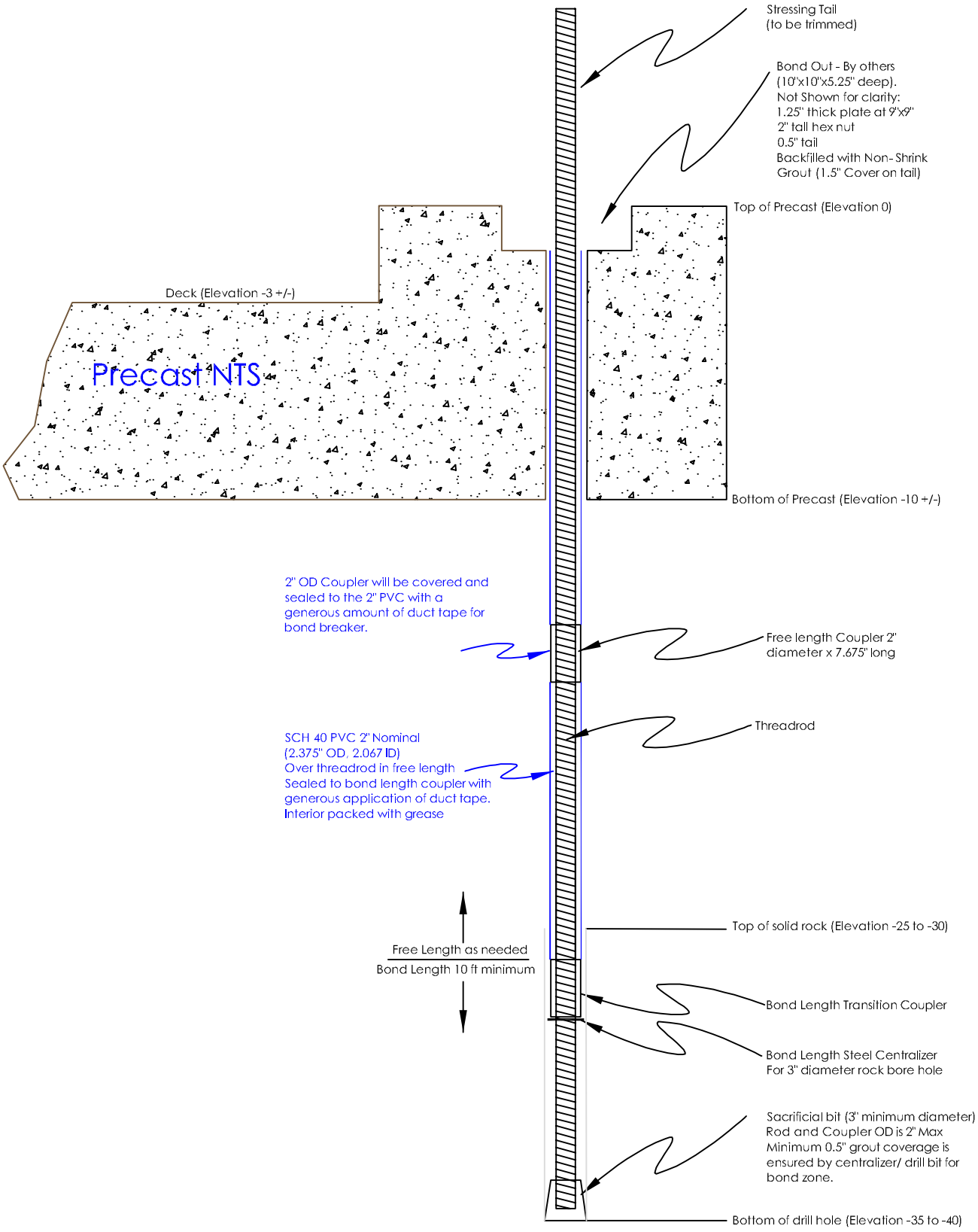

MaineDrilling &Blasting

Bridge 16 - Rochester, VT

Typical Anchor Sketch

DATE: June 11 2014

SCALE: NTS

Geo-Drill Injection Anchor System

The Williams Geo-Drill Injection Anchor System is today's solution for a fast and efficient anchoring system into virtually any type of soil. The system has historically been known as a "self-drilling anchoring" because the hollow fully-threaded bar serves as both the drill string and the grouted anchor, thus installation is performed in a single operation. The sacrificial drill bit is threaded onto the end of the Geo-Drill bar and left in place following drilling. The drilling fluid (air, water, or grout) is introduced through the hollow bar and allows the spoils to flush from the borehole.

The Geo-Drill System is particularly suitable for soils that do not allow for open-hole drilling (i.e. granular soils that are collapsible in nature). In such cases, drilling with a grout fluid serves the purpose of flushing spoils from the borehole and prevents looser, surrounding material from collapsing due to the higher relative density of the grout. Williams Geo-Drill Injection Anchor System should be considered on any project requiring fast production that would otherwise need to involve a casing system in order to maintain borehole stability.

Advantages of the Williams Geo-Drill Injection Anchor System

- **Fully Domestic System.**
- Fast, single-step anchoring system with simple equipment.
- Eliminates the need for a cased borehole in collapsing soils.
- Efficient installation since drilling and grouting can be performed in a single operation, saving both time and money.
- Continuously drilling and grouting under high pressure causes the grout to permeate into looser soils and creates a bulb-effect for increased bond capacity.
- Suitable for working in limited space and areas of difficult access.
- Multiple ranges of drill bits suitable for most soil conditions.
- Installed with standard track drill (top hammer) or hand-held drilling equipment, eliminating the need for larger casing rigs.
- Continuously threaded bar pattern can be cut and coupled anywhere along its length.
- Available in 10 or 20' lengths.
- Corrosion protection systems available upon request.
- FHWA approved for use as a micro pile.
- Domestic material available upon special request.

Thread rod is Hot Dip Galvanized per ASTM A123 & A153 (per spec)

B7X Geo-Drill Bar

Bar Diameter	Minimum Net Area Through Threads	Minimum Ultimate Strength	Minimum Yield Strength	Nominal Weight	Average Inner Diameter	Part Number
32 mm (1-1/4")	0.556 in² (359 mm²)	58.4 kips (260 kN)	47.2 kips (210 kN)	2.1 lbs/ft (3.1 Kg/M)	0.787" (20.0 mm)	B7X1-32
32X mm (1-1/4")	0.776 in² (501 mm²)	81.5 kips (363 kN)	66.0 kips (294 kN)	2.7 lbs/ft (4.0 Kg/M)	0.626" (15.9 mm)	B7X1-32X
38 mm (1-1/2")	1.067 in² (688 mm²)	112 kips (498 kN)	90.7 kips (404 kN)	3.76 lbs/ft (5.6 Kg/M)	0.830" (21.1 mm)	B7X1-38
51 mm (2")	1.795 in² (1158 mm²)	188 kips (837 kN)	152 kips (677 kN)	6.26 lbs/ft (9.3 Kg/M)	1.187" (30.1 mm)	B7X1-51
76 mm (3")	3.880 in² (2503 mm²)	407 kips (1811 kN)	329 kips (1466 kN)	13.79 lbs/ft (20.5 Kg/M)	1.890" (48.0 mm)	B7X1-76

Threaded Bar Profile

The Injection Bar is a high strength, impact resistant heavy wall steel tubing conforming to ASTM A519 or A513 and is continuously threaded over its entire length with a heavy duty left hand thread/deformation pattern. The steel tubing provides maximum flow with minimum resistance during high pressure flushing and grouting operations. The thread form (similar for all diameters) is a unique Williams feature that provides a lower thread pitch angle to provide easier coupling disengagement without "locking up", than conventional rope threads during drilling operations. This thread form provides more surface area and thread/deformations per unit length for superior bond capabilities over that of competitive drill steel thread forms. The bar's thread/deformation pattern has also shown to exceed the bond characteristics of ASTM A615 reinforcing steel. The lower thread angle allows the installed anchor to be torque-tensioned for fast tie back installations. The Geo-Drill Injection Anchor system is available with enhanced corrosion protection with hot-dip galvanized/epoxy coated bars and components. Installation adapters for the Geo-Drill Injection Anchors are available for all drill rigs.

Accessories

Couplings

The Geo-Drill Injection Anchor Couplings have a unique tapered center stop which seals the Injection Bar connection to prevent grout leakage during simultaneous grouting and drilling operations. The internal stop design also assures a full positive thread connection in both Injection Bar ends while providing a matching end bearing between bars that reduces percussion energy loss to the drill bit. The couplings are machined from ASTM A29 grade C1045 high strength steel to provide 100% ultimate tensile or compression strength capacity of the installed anchorage. The coupling OD is tapered on both ends to allow drill cuttings and grout displacement during drilling while the ID has internal chamfers to assist alignment and connection of the bars.

B7X2 Stop-Type Coupling - ASTM A29

Nominal Bar Diameter	Outside Diameter	Overall Length	Part Number
32 mm (1-1/4")	1-5/8" (41.3 mm)	6-1/4" (159 mm)	B7X2-32
38 mm (1-1/2")	2" (50.8 mm)	7-5/8" (194 mm)	B7X2-38
51 mm (2")	2-5/8" (66.7 mm)	8-1/2" (216 mm)	B7X2-51
76 mm (3")	3-7/8" (98.4 mm)	9-7/8" (251 mm)	B7X2-76

Couplers, Hex Nut are Hot Dip Galvanized per ASTM A123 & A153 (per spec)
Plate is 9"x9"x1.25" thick, is also Galvanized and is A36 material

Hex Nuts

The Hex Nuts designed exclusively for the Geo-Drill Injection Anchor system are a full 100% ultimate tension or compression strength component. They are manufactured from a high strength steel complying with ASTM A108.

B7X3 Hex Nuts - ASTM A108 or A29

Nominal Bar Diameter	Across Flats	Thickness	Part Number
32 mm (1-1/4")	1-3/4" (44.5 mm)	1-3/4" (44.5 mm)	B7X3-32
38 mm (1-1/2")	2" (50.8 mm)	2" (50.8 mm)	B7X3-38
51 mm (2")	3" (76.2 mm)	2-1/2" (63.5 mm)	B7X3-51
76 mm (3")	4" (102 mm)	4-1/4" (108 mm)	B7X3-76

R9F Hardened Washers - ASTM F436

Nominal Bar Dia.	Outside Diameter	Inside Diameter	Thickness	Part Number
32 mm (1-1/4")	2-1/2" (63.5 mm)	1-3/8" (34.9 mm)	5/32" (3.97 mm)	R9F-10-436
38 mm (1-1/2")	3" (76.2 mm)	1-5/8" (41.3 mm)	5/32" (3.97 mm)	R9F-12-436
51 mm (2")	3-3/4" (95.3 mm)	2-1/8" (54.0 mm)	7/32" (5.56 mm)	R9F-16-436
76 mm (3")	5-1/2" (140 mm)	3-1/8" (79.4 mm)	9/32" (7.14 mm)	R9F-24-436

R8M Beveled Washers - ASTM A47 or ASTM A519

Nominal Bar Dia.	Degree of Bevel	Outside Diameter	Inside Diameter	Maximum Thickness	Minimum Thickness	Part Number
32 mm (1-1/4")	15°	2-13/16" (71.4 mm)	1-5/16" (33.3 mm)	1" (25.4 mm)	5/16" (7.9 mm)	R8M-09S
38 mm (1-1/2")	15°	3-3/8" (87.7 mm)	1-9/16" (39.7 mm)	1-15/64" (31.4 mm)	3/8" (9.7 mm)	R8M-12S
51 mm (2")	15°	4" (102 mm)	2-1/4" (57.2 mm)	1-37/64" (39.9 mm)	1/2" (12.7 mm)	R8M-16B7X
76 mm (3")	15°	6" (152 mm)	3-1/2" (88.9 mm)	2-7/64" (53.6 mm)	1/2" (12.7 mm)	R8M-24B7X

Beveled washers must be used in conjunction with hardened washer.

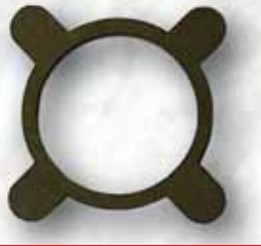

Centralizers

The bar can be centralized in the drill hole on 10' centers by attaching a steel centralizer in front of the coupling during the drilling operation. Available plain or hot dip galvanized to ASTM A123. State drill hole diameter and bar size when ordering.

Bearing Plates

Williams provides a large selection of bearing plates for the Geo-Drill Injection Anchors in ASTM A36 in Grade 36 or ASTM A572 Grade 50 steel. The bearing plate holes can be round for standard embedment applications or slotted for angled Injection Anchors installed through steel walers or in contact with a rock slope. We manufacture plates to any size specifications required by the project or Williams can design a bearing plate for your specific application.

Accessories

B7XB Drill Bits

HC Drill Bit
Hardened cross cut drill bit, suitable for the majority of applications including narrow bands of soft rock.
Soil Types: Fills and Medium Dense Gravels

CC Drill Bit
Tungsten carbide cross-cut drill bit. Excellent choice for majority of granular soils with mixed hard formations.
Soil Types: Fills, Gravels, Shale & Seamy Rock Formations.

SB Drill Bit
Two stage cross cut drill bit, suitable for loose ground and fills.
Soil Types: Sand, Clay and Medium Dense Clays

CB Drill Bit
Tungsten carbide hemispherical button drill bit for moderately strong to strong rock, boulders and rubble.
Rock Types: Mudstone, Limestone, and Granite

GB Drill Bit
Offset face cross cut drill bit suitable for drilling in cobbles with silt and gravel as well as sedimentary bedrock material.

Nominal Bar Diameter	Available Drill Bit Diameters				
	HC	CC	SB	CB	GB
32 mm (1-1/4")	2" (51 mm)	2" (51 mm)	4" (100 mm)	2" (51 mm)	4" (100 mm)
	2-1/2" (65 mm)	2-1/2" (65 mm)			
	3" (76 mm)	3" (76 mm)			
	3-1/2" (89 mm)	3-1/2" (89 mm)			
	4" (100 mm)	4" (100 mm)			
38 mm (1-1/2")	2-1/2" (65 mm)	2-1/2" (65 mm)	5" (127 mm)	3" (76 mm)	4" (100 mm)
	3" (76 mm)	3" (76 mm)			
	3-1/2" (89 mm)	3-1/2" (89 mm)	6" (150 mm)		
	4" (100 mm)	4" (100 mm)			
51 mm (2")	-	3" (76 mm)	6" (150 mm)	4" (100 mm)	5" (127 mm)
		3-1/2" (90 mm)			
		4" (100 mm)	8" (203 mm)		
76 mm (3")	-	5" (125 mm)	10" (254 mm)	-	-
		6" (150 mm)			
		7" (175 mm)			

Applications

Soil Nails

Soil Nails are non-tensioned, in-situ reinforcement for the stability of excavations and embankments in top-down construction. The Williams Geo-Drill Injection Anchor System is an ideal choice for soil nailing in difficult soils as it offers high installation rates. Hollow bar elements have been used as an approved permanent soil nail on selected DOT projects and are currently under an FHWA evaluation study which would make them generally accepted for use as a permanent soil nail.

Prestressed Ground Anchors

Williams Geo-Drill Injection Bar Anchors can be used as a choice for pre-tensioned anchors in loose or collapsing soils without the need for a casing. A free length must be installed onto the anchor if the project specifications call for a pretension load to be applied from the bond length. Please consult with a Williams specialist for suggestions to properly attach a free length sleeve. Note to Designer: Consult with Williams for an appropriate level of corrosion protection if prestressed ground anchors are intended to be used for a permanent application.

Micro Piles

Williams Geo-Drill Injection Bar offer an excellent choice for micro piles in difficult ground conditions where open-hole drilling isn't possible. The continuously threaded bar profile lends itself perfectly for restricted headroom applications because the bar can be cut and coupled at any length. The FHWA has approved hollow bar anchors for permanent use in micro pile applications.

Tunnel Spiles and Forepoling

The Geo-Drill Injection Anchor System are often used for spiling in NATM tunneling. Spiles are continuously drilled and grouted pre-support reinforcement to enable the heading of a tunnel to advance without the risk of falling debris. The anchors can also be used as face stabilization of portals.

Limitations of System

In general, Williams recommends using the Geo-Drill Injection Anchor System in difficult soils that do not allow for open-hole drilling. Ground conditions featuring large voids or the presence of underground water are generally not suitable for a drilled and grouted hollow bar. In hard rock, conventional DTH (Down the Hole Hammers) in open-hole drilling offer a more efficient alternative. In all such cases, Williams offers solutions in their complete line of solid bar anchor systems and multi-strand tendon systems.

Project Photos

Project: Queens Crossing
Contractor: Urban Foundation
Location: New York, NY

Project: Heartland Corridor Clearance Improvement
Contractor: Johnson Western Gunite
Location: Radford, VA

Project: Reno Retrack Project
Contractor: Condon Johnson
Location: Reno, NV

Project: Private Residence
Contractor: B&Y Construction
Location: Aspen, CO

Project: Hana Highway
Contractor: Prometheus Construction
Location: Maui, HI

Project: North & East Telluride
Contractor: Mays Construction Specialties
Location: Telluride, CO

Installation

The Williams Geo-Drill Injection Anchor System is optimally used in poor or very poor ground conditions ranging from inconsistent fill, boulders, rubble and weathered rock to sand and gravel. Generally the system is installed with rotary percussive drilling and continuous grouting. The thickness of grout can be varied depending on susceptibility of the borehole to collapse, however a grout mixture of 0.4 water to cement ratio is recommended in poor, collapsible soils to ensure a high enough density to support the annulus. In all cases, a final grout mixture of 0.40 w/c should be used for adequate in-situ structural capacity. Williams recommends mixing the grout in a colloidal (shear type) mixer, so once pumped, the fine grout particles are fully able to disperse into the small voids of the surrounding soil. This well mixed grout exits the side ports of the drill bit under pressure to flush and remove the softer parts of the soil while penetrating into the firmer material for increased bond capacity. Williams recommends to partially withdraw each fully drilled section up the drill mast prior to attaching new sections, this way the drilling can begin in a plunging type action to even further improve grout penetration. Utilizing proper drilling and grouting techniques is important as the system would generally fail between the soil/anchor interface, not the grout/anchor interface.

In all cases the hollow bar system should be drilled slow enough to ensure rotation through the soil as opposed to excessive percussion and feed pressure with limited rotation. Such practice will provide the formation of a true borehole with consistent grout cover. Grouting pressure should be sufficient to maintain circulation at all times with a small amount of grout return visible at the mouth of the borehole. Normal drilling rotation is in the range of 40 and 100 RPM.

Drill Rigs

The preferred method of installation for the Williams Geo-Drill Injection Anchor System is rotary percussion drilling, as this method offers good directional stability and high rates of production. Hand-held drill rigs can be used to install 32 mm (1-1/4") bars. Hand-held equipment works best when used in conjunction with a jackleg or within a slideframe arrangement.

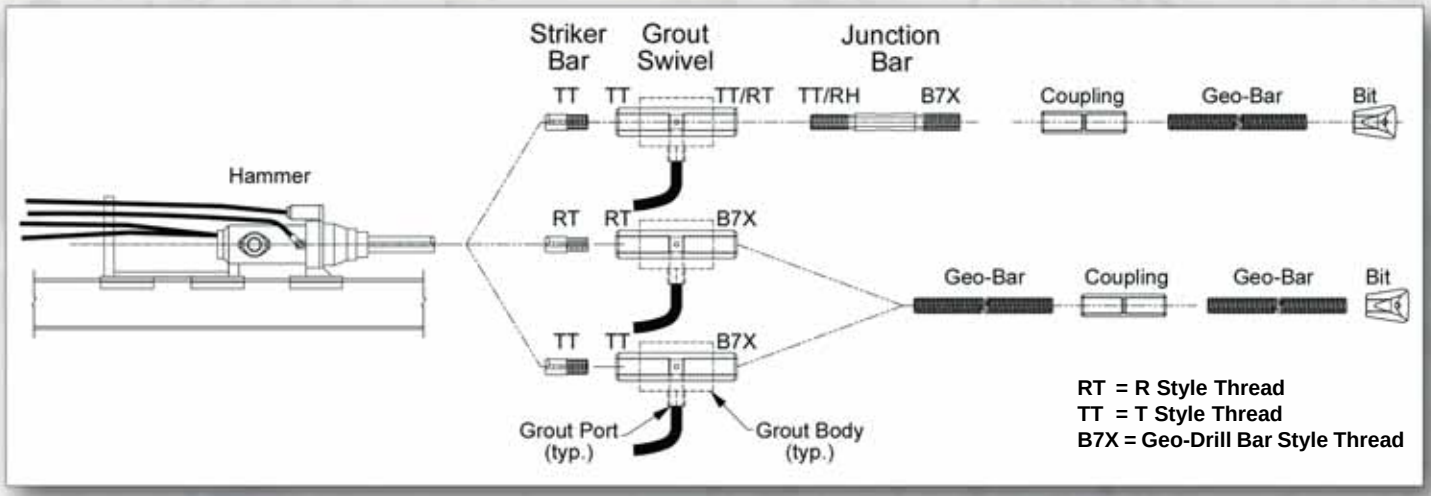

Grout-Swivel System for Rig Installation

For simultaneous drilling and grouting installations a grout-swivel system is required. The grout-swivel consists of a Grout Body and Grout Shank. The Grout Shank fits within the Grout Body and contains grout inlet ports. One end of the shank attaches to the striker bar while the other end attaches to the hollow bar anchor. The Grout Body contains an inlet pipe to allow grout to enter into the shank and down the hollow bar. The body remains stationary while the shank spins with the rotary action of the drill. To hold the body into position and prevent spinning with the rotary action of the drill, it is necessary to attach a locator frame from the body to the drifter.

We recommend water or grout flush (not air) be used with the grout-swivel system. In all cases, grease should be applied to the grout-swivel system prior to use.

Junction Bar

When using a grout shank with a T or R type thread, Williams recommends the use of a Junction Bar to transition between the Grout Shank and the Geo-Drill Bar. Coming out the anchor end of the Junction Bar would either be a Geo-Drill Coupling or Coupling Adapter. All disengagement during drilling to add sections or move to another anchor location would be done from below the Junction Bar and not at the Grout Shank, thus prolonging the life of the Grout Swivel.

Coupling Adapter

A Coupling Adapter is a machined and case hardened adapter, which is usually located just below the drill hammer and is used to connect the striker bar to the hollow bar. Sizes are available in any striker bar thread type to connect to any Geo-Drill Bar size. Generally a Coupling Adapter would be used in place of a grout-swivel during an air flush installation.

Installation

1. Williams Geo-Drill Injection Anchor set into position for installation.

2. Installation begins with rotary percussive drilling and either grout, water or air flushing.

3. Once the first 10 foot section is installed, drilling stops long enough to add the second section.

4. Raise the anchor high enough to get visible evidence of flush return from the mouth of the bore hole and begin drilling again in a normal fashion.

5. Add sections in the manner noted in step four until anchor reaches final depth. Completely flush all drilling grout and debris with competent compressive strength grout.

Strand Accessories

Centralizers - CEN

Centralizers are placed over the strand anchor assembly to maintain the minimum required 0.5" distance between the assembled anchor bundle and the drill hole wall. Depending on the anchor type and orientation, there are a wide variety of centralizers available for every application. State drill hole size for ordering.

Heavy Duty Plastic Grout Tube

Furnished in product lengths or in rolls.

O.D.	I.D.	Part No.
3/8" (9.5 mm)	1/4" (6.4 mm)	T3P03002
1/2" (12.7 mm)	3/8" (9.5 mm)	T3P04003
5/8" (15.9 mm)	1/2" (12.7 mm)	T3P05004
3/4" (19.1 mm)	5/8" (15.9 mm)	T3906005
1" Nom. (25.4 mm)	3/4" Nom. (19.1 mm)	T3P06

Post-Grout Tube

Williams will provide post-grout tubes for anchors bonded in weak rock or soil upon request. Williams supplies flexible Post-Grout Tube with bursting strengths of 1000 psi, as well as PVC Post-Grout Tube with bursting strengths of 900 psi. The Post-Grout Tube length and valve placement are adjustable and can be specified at the time of order. Drill hole diameter should be a 1" minimum clearance to accommodate Post-Grout Tube.

Corrosion Inhibiting Grease or Wax Gel

Williams corrosion inhibiting compounds can be placed in the free stressing areas, in the end caps, and trumpet areas. Each are of an organic compound with either a grease or wax gel base. They provide the appropriate polar moisture displacement and have corrosion inhibiting additives with self-healing properties. They can be pumped or applied manually. Corrosion inhibiting compounds stay permanently viscous, chemically stable and non-reactive with the prestressing steel, duct materials or grout. Both compounds meet PTI standards for Corrosion Inhibiting Coating.

Spacers - RSPS

Strand spacers are provided in the anchor bond zone to separate the strand and provide for the minimum required grout cover around each strand for corrosion protection and bond strength development. The strand spacers are normally located 1-2 feet above the bottom of the anchor and at the top of the bond zone. The intermediate strand spacers are typically placed at a distance of 5-10 feet, center to center along the bond zone between the top and bottom spacer.

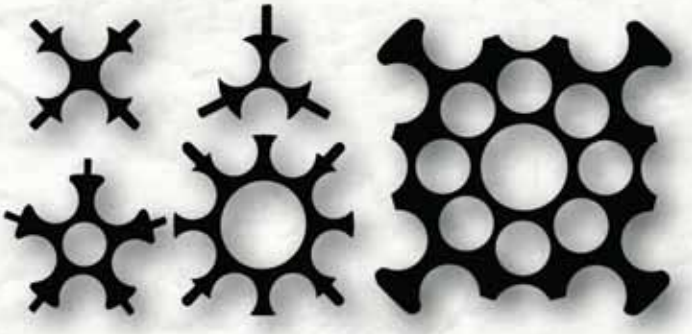

Corrugated Duct - R75

Williams utilizes corrugated duct that complies with the required wall thickness (0.060" nominal) as specified by the Post-Tensioning Institute's *Recommendations for Prestressed Rock and Soil Anchors*.

Heat Shrink Tubing

Provides a corrosion protected seal when connecting or repairing smooth and corrugated segments.

Corrosion Protection Coatings

Optional coatings for steel end caps, bearing plates with trumpet and anchor heads are available for additional corrosion protection as required by the designer. Coating specifications are as follows:

Electro Zinc Plating: **ASTM B633 (wedge plates)**
Hot Dip Galvanizing: **ASTM A153 (bearing plates/trumpets and steel end caps)**
Epoxy Coating: **ASTM A775 (bearing plates/trumpets and steel end caps)**

Product Data Sheet

No. 17007 - 05/13

COLD GALVANIZE COATING 93% ZINC RICH

AEROSOL CARB VOC < 80% / MIR ≤ 1.90, BULK < 500 G/L

PRODUCT NUMBERS:
7007 - 13 OZ. NET WT. AEROSOL

Product number 7007 plus letter designation is as follows:
P = 1/2 pint; Q = 4 one-quart cans; G = 1 one-gallon can (not sold in fives or drums due to weight)

I. GENERAL DESCRIPTION

Description: Crown's premium Cold Galvanize Coating 93% Zinc Rich provides corrosion protection to ferrous metal surfaces; first as a long-lived coating of practically pure Zinc comparable to that obtained by galvanization and second, through sacrificial anodization. Both aerosol and bulk use metallic zinc dust that is 97% pure, which leaves 93% zinc in the dry film. The zinc fuses to metal substrates for protection equal to or better than hot-dipped galvanizing. This protection becomes effective when the surface is scratched, broken, or corrupted. With the presence of moisture the Zinc coating will corrode while continuing to protect the metal it covers.

Benefits: Meets multiple performance requirements of ASTM, MIL, and DOD specifications (see "Specifications"). Acceptable as a coating in federally inspected meat and poultry plants for application to structural surfaces or surfaces where there is a possibility of incidental food contact. It acts as both a metallic primer and single coat for iron, steel, and their welds. It may be the final protective coating or it may be top coated with Aervoe's DTM water-based Rust Proofing paint.

Application: Use on damaged galvanized surfaces, structural steel, automobiles, guard rails, bridges, TV and radio towers, welded joints, storage tanks, signs and sign posts, equipment (farming, mining & construction, power plant, railroad, offshore, etc.), gutters, pipelines, transformers, and corrugated metal buildings. Ideal for industrial type applications in the aviation, marine, petroleum and manufacturing fields.

Directions: Apply directly to metal or galvanized surfaces that are free of loose rust, heavy mill scale, old paint, grease, moisture, and other contaminants. Clean severely rusted areas with a wire brush to remove loose scale. For best results, use at temperatures between 64° and 86°F (18° to 30°C). Drying may be accelerated by applying heat. **Notice:** *Zinc is a dense material which will settle on the bottom of the container. This product is formulated to resist hard settling (where zinc is dry, clumped together and will not remix). However, soft settling (the zinc sinks to the bottom but remains wet, no clumping, & will remix) is natural for this product and can occur from road vibration during transportation or while sitting on the shelf.* **Aerosol application:** align spray head with black mark on valve rim to insure complete evacuation of contents. Vigorously shake can for 2 minutes after hearing rattle of agitator ball (ball should release in 10 to 30 seconds), and intermittently (1 to 2 seconds) during use. Apply from a distance of 10 to 12 inches. Spray in light, sweeping strokes to avoid run and sags. The preferred application method is to apply a coating of 3-4 mils, wet thickness in one application. One coat will be satisfactory. A second coat may be applied to maximize the protection (refer to the recoat schedule). Whenever you must set the aerosol can aside for more than 2 minutes or are ready to store the can, then invert the can and spray for two seconds to clear dip tube, valve and tip to prevent zinc from drying in those areas and clogging the can. **Bulk application:** mix contents thoroughly (paint shaker or electric drill with metal paint stirrer) and scrape bottom and sides. Contents may be applied full-strength without thinning. If using in conventional spray equipment, use a minimum pressure of 40 psi. If thinning, do not add thinner directly to the contents; pour contents into separate container and thin as necessary with mineral spirits or vm&p naphtha. Check local VOC regulations / air quality standards prior to thinning as the use of either solvent will increase the VOC content. Invert stored bulk containers occasionally to keep solids in suspension.

Limitations: Please refer to the Safety Data Sheets for specific information on material hazards, etc. Do not apply at temperatures below 40°F (4°C), or if rain is imminent within 6 hours of application. Galvanizing products have a limited shelf life; use them within 12 months from the date of manufacture (guarantee is for 6 months from date of purchase and 12 months from date of manufacture). The bulk product has special conditions related to storage. In bulk form, the user must be aware of possible gas formation which could distort the container and affect storage stability. Containers should be stored in a cool dry place.

Packaging:

Aerosol:	Cans (211x604)	13 net wt. (369 g)	8.6 fl. oz. (255 ml)
	Case (12/case):	14 lbs. (6.4 kg)	0.47 CF (0.013 CM)
Bulk:	1 case of 12 half-pints (mt. rd.)	21 lbs. (9.5 kg)	0.33 CF (0.009 CM)
	1 case of 4 quarts (mt. rd.)	26 lbs. (11.8 kg)	0.29 CF (0.008 CM)
	1 case of 1 gallon (mt. rd.)	25 lbs. (11.3 kg)	0.31 CF (0.009 CM)

AERVOE®
Aervoe Industries, Inc.
P.O. Box 485, Gardnerville, NV 89410

CROWN ZYNOLYTE Burton
Wind'N Go SOLADYNE e-Zest

(775) 783-3100 Phone • (775) 782-5687 Fax • (800) 227-0196 Customer Service
www.aervoe.com • mailbox@aervoe.com

II. CHARACTERISTICS & PROPERTIES

Specifications: Meets specification MIL-P-21035B (par. 3.3.1, 3.3.2, & 3.3.3) and performance requirements of MIL-P-46105(MR) (par. 3.2, 3.3.1, 3.5.8. 4.4.5), DOD-P-21035A (par. 3.1, 3.2, 3.5.3, 3.5.6, 4.4.3, 6.1, & 6.5), and MIL-P26915 as a lead-free, zinc dust primer for steel surfaces. Meets ASTM B-117 salt spray (2000 hrs) and ASTM A 780. Meets SSPC 20 paint specifications. Bulk product meets National Architectural Coatings VOC emissions standards of 500 g/L and aerosol meets CARB requirements.

Appearance:		
Gloss at 60°	< 5	
Class	Metallic	
Coverage:	**Aerosol**	**Bulk**
Theoretical (at 1 mil dry)	24 sq. ft./can	870 sq. ft./gallon
Practical (at 1/2 mil dry)	48 sq. ft./can	1740 sq. ft./gallon
Drying Schedule (at 77° F [25° C], 50% Humidity at 1 mil dry):		
To touch	15 min.	15 to 20 min.
To handle	30 min.	1 hr.
To recoat	Before 1 hr. or after 24 hrs.	Before 1 hr. or after 48 hrs.
Full cure	24 hrs.	48 hrs.
Performance and Chemical Properties:		
Weight per gallon	17 lbs.	23 lbs.
Specific gravity	2.03	2.76
Viscosity		90 to 100 Ku
Flammability: Label marking	Extremely flammable	SP
Flash point	< 0° F (-18° C)	101° F (38° C) T.C.C.
Operating temperature range	50° to 90° F (10° to 32° C)	50° to 90° F (10° to 32° C)
Percent solids by weight	60%	85%
Percent solids by volume	20%	45%
Percent pigment by volume	12%	30%
Dry Film Weight	93% zinc dust	93% zinc dust
	7% resin	7% resin
CARB VOC (zinc rich primers)	< 80%	< 500 g/L
CARB MIR (Metallic Coating)	< 1.90	
Interior durability	Excellent	Excellent
Exterior durability	Excellent	Excellent
Temperature resistance	150° F (65° C)	150° F (65° C)
Color fastness	Excellent	Excellent
Adhesion (ASTM D3359)	Fair	Very Good
Salt spray corrosion (ASTM B117)	2000 hrs.	2000 hrs.
Mineral Spirits resistance	Fair	Fair
Gasoline resistance	Poor	Good
Motor Oil resistance	Good	Good
Pencil hardness (ASTM D3363)	< 2B	< 2B
Base Materials:		
Resin system	Acrylic	Epoxy Ester
Solvents (top two)	VM&P Naphtha, MEK	Petroleum Distillate
Propellant	Hydrocarbon	

III. SHIPPING, STORAGE AND HEALTH

	Aerosol	**Bulk**
UN number	UN1950	UN1263
Proper Shipping Description	Aerosols	Paint
Hazard Class	2.1	3
Packing Group	N/A	III
Limited Quantity	Yes	Container size determines applicability
Warehouse storage level number	NFPA 30B Level 1	Flammable liquid class 1-C
Storage temperature	32° to 120°F (0° to 49°C)	32° to 120°F (0° to 49°C)
Shelf life	6-12 months	6-12 months
HMIS ratings		
Health	2	2
Fire	4	2
Reactivity	1	1

IV. MISCELLANEOUS

Contains no Ozone Depleting Substances (O.D.S.)

V. WARRANTY

1-year performance warranty on all products from date of purchase. Report to home office or local Aervoe representative for examination. Because Seller cannot control Buyer's handling or use of product, Seller makes no warranty expressed or implied when not used or stored in accordance with directions. Seller shall not be liable for cost of labor, incidental or consequential damages, and this warranty is limited to replacement of product or credit of purchase.

Installation Procedure

Anchor Assembly

- Anchor typical detail is enclosed for reference. The galvanized thread rod will be furnished in 10 foot minimum lengths. The 2" nominal diameter free stressing sleeves will be installed at the factory by the anchor manufacturer. Lengths will be added as the drill progresses and couplers will be treated as detailed in the typical detail enclosed.

Anchor Installation

- At the option of the MD&B, the hole may be predrilled with conventional drill steel and rock bit advanced by the percussion drill rig. Predrilling will determine the elevation of rock for material staging and serve as pre-bore/flush of overburden between the precast and the ledge surface. This will minimize the overburden drill spoils which have to be managed in the bond out during the anchor installation, predrill any significant boulder obstructions in the overburden and enhance the ability for migrating grout flush.
- The Anchor will be installed using the percussion drill rig in accordance with the manufacturer's recommendations, Williams Form, which are enclosed in the materials section of this submittal.
- Grouting will be primarily during the drill process. If clean grout is not returned at the top of the hole (to bond-out grade) via pumping bond grout through the anchor the following will be completed.
    - If return is not achieved by a reasonable attempt (2 times the theoretical after making final embedment depth), the hole will be topped off from the top of the hole via lancing a grout tube to the bottom of the precast to ensure any displaced material at the precast/subgrade interface is backfilled with bond grout.
- After the anchor placement is complete, the bond out will be cleaned of debris. A skim coat of stiff mix bond grout will be placed on bearing surface as needed. The PVC stressing length will be trimmed as needed and the plate will be installed.
- The bond grout will cure for minimum 3 days or as break determine prior to anchor testing.

Anchor Testing

- All Anchors will be proof tested. Information on the stressing equipment and procedure are detailed under a separate document.
- There will be no sacrificial test anchor.

Completion

- Upon acceptance of the anchor testing the anchor will be trimmed as shown in the typical detail. The cut end will be cleaned and a cold galvanize product will be applied to the cut end (product cut sheet in Anchor Materials section). The bond

out will be back filled with non-shrink grout (product cut sheet in Grout Materials section).

Installation Logs

- Drilling Logs & Grouting Logs will be completed, logs are included in this submittal

Grout Materials
&
Grouting Equipment

Bond Grout Mix:

- The mixture of grout is 5 gallons of water to 94 # (1 bag) of Portland Type I / II cement. The ad-mixture FX-32 Catalytic Agent may be used to reduce cure time ONLY if approved for use by VTrans.
- Sample breaks on this mix are enclosed.

Non Shrink Grout:

- The mixture will be the recommended plastic/flow able mix.

OPTIMUM

CONSTRUCTION LAYOUT - MATERIALS TESTING

P.O. Box 439 ●195 Gosselin Drive ● Derby, Vermont 05829
Office: 802-766-2434 ● E-mail: optimum.test@yahoo.com

Report of Grout Cubes Compressive Strength

Project Name: Kingdom Community Wind

Project Number: **1116-316**

Client: Brian Holmes

Client Contract #:

General Contractor: Reed & Reed, Inc
Woolwich, Maine

SAMPLE BOND GROUT BREAKS OF MD&B PROPOSED MIX, FX32 CA will be used only upon approval by VTrans

PLACEMENT INFORMATION

Date Cast: 6/28/2012

Placement Location: T-13 Rock Anchor Grout

Grout Type: Portland Type I/II w/ FX-32 Catalyitic agent

Mix Design: 5 Gal. water / 94 lb bag with 8 oz of FX-32

Strength Requirements: Minimum 3000 PSI @ 7 Days

TEST RESULTS

Mark	Date Tested	Age (Days)	Cube Dimensions D1 (in)	Cube Dimensions D2 (in)	Total Load (lbs.)	Unit Load (psi)
A	7/5/2012	7	2.01	1.99	29700	7425
B	7/5/2012	7	1.96	2.00	30290	7727
C	7/26/2012	28	2.00	2.02	36240	8970
D	7/26/2012	28	2.01	1.99	36430	9108

Remarks:

Bond Grout

DRAGON®
PRODUCTS COMPANY

P.O. Box 191, U.S. Route 1 • Thomaston, Maine 04861 • 207-594-5555

MILL TEST RESULTS
Laboratory at Thomaston, Maine

Date: January, 2011
Cement Type: I/II
Silo Numbers: 20, 24, 27 & 30

CHEMICAL DATA	Percent
Silicon Dioxide	20.3
Aluminum Dioxide	4.3
Ferric Oxide	3.0
Calcium Oxide	61.7
Magnesium Oxide	3.6
Sulphur Trioxide	3.7
Loss on Ignition	1.2
Insoluble Residue	0.4
Tricalcium Silicate	53
Dicalcium Silicate	18
Tricalcium Aluminate	6
Sodium Oxide	0.3
Potassium Oxide	1.3
Equivalent Alkalies	1.2

(Chemical Analysis all per ASTM C 114)

PHYSICAL DATA	
Specific Surface Blaine (sq m /kg) *(Per ASTM C 204)*	377
Percent Passing 325 Mesh *(Per ASTM C 430)*	98.3
Compressive Strength (psi) *(Per ASTM C 109)*	
1 day	2390
3 day	3980
7 day	4730
28 day	
Vicat Setting Time *(Per ASTM C 191)*	
Initial (min.)	115
Final (min.)	205
Air Content (%) *(Per ASTM C 185)*	7.7
Autoclave Expansion (%) *(Per ASTM C 151)*	0.17
Expansion in water (%) *(Per ASTM C 1038)*	0.010
Heat of Hydration (%) *(Per ASTM C186)*	80

Certified by

Jennifer K. Colburn

Jennifer K. Colburn

We hereby certify that this cement complies with current ASTM C 150, AASHTO M-85 and CSA-A3001 Type GU specifications.

Testing was completed by Brian Secord and/or Richard Erickson
This mill test report is generated for silos produced in the calendar month prior to the date upon this report.

email: info@foxind.com

FOX INDUSTRIES
ENGINEERED PRODUCTS

FX-32
Catalytic Agent

www.foxind.com

Fox Industries, Inc. • 3100 Falls Cliff Road • Baltimore, Maryland 21211

DESCRIPTION:

FX-32 Catalytic Agent is a high range water reducing admixture for Portland cement based materials. **FX-32 CA** is available in liquid or powder forms and meets the performance requirements of ASTM C 494 Type F admixtures. A water reduction, in concrete and grout up to 25% can be achieved at a normal level of workability **FX-32** provides excellent workability of plastic concrete, superior later-age strength and improved finishability, **FX-32** produces high-early strength, scale resistant concrete or grout even with low cement mixes.

ADVANTAGES:

- Reduces water demand of Portland cement mixes.
- Retards initial set, depending on dosage used from 1/2 to 1 hour when compared to control mix. It is capable of producing structural concrete in 24 hours.
- Increases density and lowers chloride and other chemical intrusion.
- Increases bond of new concrete or mortar to old.
- Resists attack by water with an altered pH condition or salt spray when used in marine environment or on bridge decks.
- Lower water content reduces shrinkage by 25% to 40%.

WHERE TO USE:

In concrete: For use where corrosion resistance is an Important design consideration, and where the level of chloride or chemical intrusion is needed to be kept to its lowest possible levels.

In grout: To increase fluidity, strength, density and bond. Bridge decks, tie backs, underpinning precast concrete, parking decks, and on-grade highway patching are examples of where **FX-32CA** has been successfully employed.

PHYSICAL PROPERTIES:

FX-32CA contains no calcium chloride, salts, foaming agents or sugar.

If air-entrained concrete or mortars are desired, trial mixes should be run to establish the amount of air-entraining agent required and the compatibility of the cement used (do not use Type II cement or Type I modified, unless trial mixes have established their compatibility). Usually, 1 to 2.5 liquid ounces of a vinsol resin type air-entraining agent such as **FX-340** is recommended.

APPLICATION:

FX-32 CA Liquid - Use 16 to 32 ounces of **FX-32 CA** per 100 lbs of cement, depending upon design requirements.

FX-32 CA Powder - Use 1/2 to 1 lb per 100 lbs of cement, depending upon design requirements.

Mix designs can be provided by Fox Industries.

MIXING:

16 fluid ounces of **FX-32 CA** per 100 lbs of cement will retard the initial set of concrete or mortar approximately 1/2 to 1 hour at 70°F, while reducing water requirements for a given slump by 15% to 25%.

PACKAGING:

FX-32 CA liquid is packaged in 5 gallon pails or 55-gallon drums.

FX-32 CA powder is packaged 33 pounds in a 5 gallon pail.

8 oz dose per 94# bag is typical, see recent breaks

SHELF LIFE:

One year

LIMITATIONS:

Prevent liquid from freezing. Keep powder dry. Avoid extreme heat (above120°F) in storage.

FOR INDUSTRIAL USE ONLY. KEEP AWAY FROM CHILDREN. UPDATED 5/29/2013

PHONE 410-243-8856 TOLL FREE 888-760-0369 FAX 410-243-2701

Warranty: We warrant our materials to be of good quality and will replace any material proved defective. We believe that the technical information provided is reliable and that materials will perform to your satisfaction. However, we cannot guarantee final results because of the many possible variations in field conditions and application procedures.

1 of the 2 pumps which may be used

ChemGrout®

CG-550 Rugged Series

Combines ease of operation and low maintenance to provide the ultimate in performance.

CG550/030/A
Air Powered

CG550/030/GHES
Gas/Hydraulic

CG555/030/GHES
Gas/Hydraulic

Single operator system – 45 gallon (170 liter) mixing tank, large holding hopper and centrally located controls allow a single operator to mix, transfer and pump for continuous production.

Efficiently mixes and pumps most pre-packed non-shrink grouts and repair mortars. Materials include bentonites, cement/sand and most slurry products.

Outputs to 16 gpm (60 lpm), 400 psi (27 bar).

Power options include air, electric/hydraulic, hydraulic, gas/hydraulic and diesel/hydraulic.

Pump completely disassembles with only a hammer for fast and thorough cleaning.

ChemGrout®

Widest Selection of Grouting Equipment in the World

CG-030 Rapid U-clip Disassembly

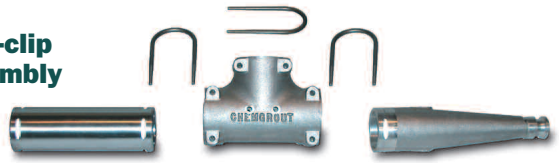

The Rugged Series features a single acting, variable speed 3" piston pump that provides the versatility to handle materials ranging from fluid slurries to heavily sanded grouts. Materials commonly used with the CG-030 include cement slurries, sanded cement mixes, bentonite mixes (with or without sand), most repair mortars, high-strength non-shrink grouts and self-leveling products.

The CG-030 is engineered for ease of operation and low cost maintenance. The unique staple lock construction holds all working components together allowing parts to be easily accessed for cleaning and maintenance.

The large capacity hopper is mounted above the suction housing, enabling a new batch to be mixed while the first is being pumped. This helps to provide a consistent "non-stop" discharge of material, virtually eliminating the clogging of tremmie lines.

CG-030 Piston Pump Skid Mounted

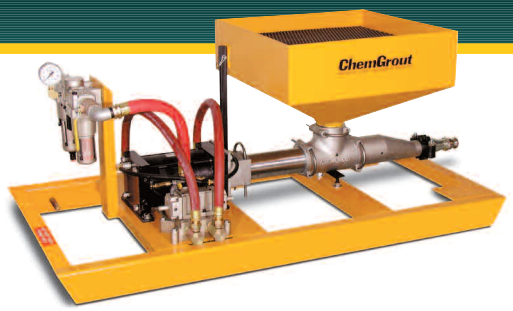

Complete grouting systems combine the CG-030 piston pump with a high efficiency paddle mixer to provide a continuous output of material. Both mixer and pump are equipped with their own variable speed control.

The large 45-gallon mix tank features specially designed blades and baffles that develop a high shearing action, insuring rapid and thorough mixing. After mixing, the material is transferred to a holding hopper through a slide gate designed to handle the most difficult materials. Holding hoppers are available in 15-gallon (57 liter) or 30-gallon (113 liter) sizes and are matched based on material flow.

The compact, skid mounted CG-550/030 is available in either air or hydraulic power. Hydraulic power units with either a gasoline/diesel engine or an electric motor can also be mounted on a separate skid. The trailer mounted CG-555 is a fully integrated system combining mixer, pump and power system, all in a single road worthy package.

Specifications

CG030 Skid - Power	Max. Output/Pressure	Required	Weight	Size
Air	16 gpm (60 lpm), 400 psi (27 bar)	100 cfm, 100 psi	310 lbs	64" x 31" x 29"
Hydraulic	14 gpm (53 lpm), 400 psi (27 bar)	9 gpm, 2000 psi	290 lbs	64" x 31" x 29"

CG550/030 Skid Power	Max. Output/Pressure	Required	Weight	Size
Air	16 gpm (60 lpm), 400 psi (27 bar)	150 cfm, 100 psi	490 lbs	66" x 31" x 56"
Hydraulic	14 gpm (53 lpm), 400 psi (27 bar)	2 Supplies each of 9gpm, 2000 psi	450 lbs	66" x 31" x 56"
Electric/Hydraulic	14 gpm (53 lpm), 400 psi (27 bar)	*3 Phase	955 lbs	84" x 34" x 56"
Gas/Hydraulic, Electric Start	14 gpm (53 lpm), 400 psi (27 bar)	Self-Contained	955 lbs	84" x 34" x 56"
Diesel/Hydraulic	14 gpm (53 lpm), 400 psi (27 bar)	Self-Contained	1050 lbs	84" x 34" x 56"

CG555/030 Trailer - Pwr	Max. Output/Pressure	Required	Weight	Size
Gas/Hydraulic	14 gpm (53 lpm), 400 psi (27 bar)	Self-Contained	1400 lbs	110" x 60" x 70"
Diesel/Hydraulic	14 gpm (53 lpm), 400 psi (27 bar)	Self-Contained	1495 lbs	110" x 60" x 70"

* Several Voltages Available

Accessories

Grout Hose. Equipped with quick disconnect fittings. Available in 25 and 50 foot lengths.

Water Meters. Available in manual or automatic. Accurately measures the water for each batch.

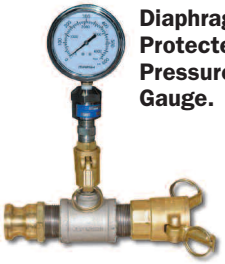

Diaphragm Protected Pressure Gauge.

Mechanical Surface Packer. Equipped with shut-off valve and a quick disconnect fitting.

Applications include:
Soil nails, tiebacks, earth anchors, cable & rock bolts, foundation stabilization, soil compaction, pavement undersealing, slabjacking, slab raising, underwater foundations, piers, deep well casing, well sealing, abandonment and geothermal.

ChemGrout®

Widest Selection of Grouting Equipment in the World

ChemGrout, Inc., P.O. Box 1140, 805 E. 31st Street, LaGrange Park, IL 60526 USA • Phone: (708) 354-7112 • Fax: (708) 354-3881
Visit our web site: www.chemgrout.com • E-mail: info@chemgrout.com

2 of the 2 pumps which may be used

ChemGrout®

CG-500 Versatile Series

The CG-500 Series are balanced systems that enable high volume production and continuous mixing for a broad range of applications.

CG500/2C6/A
Air Powered

Specially designed mix tank provides high shearing action for thorough and complete particle wetting, producing superior grout.

For grouting tunnels, shafts, dams, mines, void filling, tiebacks, piling encasements, rock grouting & wells.

Mixes & pumps neat cement or cement/sand grouts. Mixing & pumping all on one skid for fast mobilization.

Maximum output 20 gpm (76 lpm). Maximum pressure 174 psi (12 Bar), optional 261 psi (18 Bar).

Two 70 gallon (265 liter) mixing tanks & a 15 gallon (57 liter) holding hopper allows continuous production.

Power options include air, hydraulic, electric/hydraulic gas/hydraulic & diesel/hydraulic.

ChemGrout®

Widest Selection of Grouting Equipment in the World

Versatile Series – High Output, Continuous Operation

Highly versatile, the CG-500 handles a broad range of grouting applications including tunnels, shafts, dams, plant maintenance and geotechnical works. The unique twin mix tank design permits continuous pumping as each tank alternates feeding the hopper. This non-stop pumping process maximizes the batching of materials such as neat cement, sand/cement, and most commercial pre-bagged grouts.

Two high-capacity 70-gallon mixing tanks, pump, and 15-gallon holding hopper are all mounted on a single skid for quick, easy set-up and immediate operation. The holding hopper includes an internal auger that keeps the material thoroughly mixed while supplying the pump.

The open throat grout pump features a non-pulsating positive displacement rotor-stator that provides a constant discharge of materials. This progressing cavity pump is variable speed with an output of up to 20 gpm with a standard maximum pressure of 174 psi (261 psi optional).

CG-500GH
Gas/Hydraulic

Industries

Tunneling	Well Drilling	Geotechnical
Construction	Mining	Municipal
Restoration	Highway	

Specifications

CG500 Pump	2C6	3C6
Pump	open throat, non pulsating	
Maximum Output	20 gpm (76 lpm)	
Maximum Pressure	174 psi (12 Bar)	261 psi (18 Bar)

CG500 Power	Required	Weight	Size
Air	250 cfm, 100 psi	1100 lbs	88L X 34W X 58H
Hydraulic	12 gpm,1200 psi	1050 lbs	88L X 34W X 58H
Electric/Hydraulic	*3 Phase only	1550 lbs	88L X 34W X 58H
Gas/Hydraulic	Self contained	1425 lbs	88L X 34W X 58H
Diesel/Hydraulic	Self contained	1625 lbs	100L X 34WX 58H

* Several voltages available

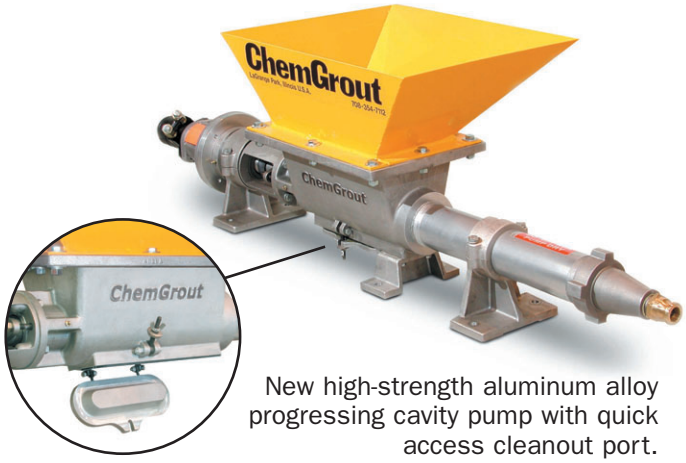

New high-strength aluminum alloy progressing cavity pump with quick access cleanout port.

Accessories

Grout Hose. Equipped with quick disconnect fittings. Available in 25 and 50 foot lengths.

Water Meters. Available in manual or automatic. Accurately measures the water for each batch.

Diaphragm Protected Pressure Gauge.

Mechanical Surface Packer. Equipped with shut-off valve and a quick disconnect fitting.

Applications include:

Soil compaction, rock grouting, void-filling, waterproofing, soil anchors, cable bolts, rock bolts, well encasements, contact grouting, well abandonment, marine/underwater, post tensioning, precast, machine base installation, self-leveling floor underlayments, slab undersealing and slabjacking.

ChemGrout®

Widest Selection of Grouting Equipment in the World

Chemgrout, Inc., P.O. Box 1140, 805 E. 31st Street, LaGrange Park, IL 60526 USA • Phone: (708) 354-7112 • Fax: (708) 354-3881
Visit our web site: www.chemgrout.com • E-mail: info@chemgrout.com

SikaGrout® 212

High performance, cementitious grout

Description

SikaGrout 212 is a non-shrink, cementitious grout with a unique 2-stage shrinkage compensating mechanism. It is non-metallic and contains no chloride.

With a special blend of shrinkage-reducing and plasticizing/water-reducing agents, SikaGrout 212 compensates for shrinkage in both the plastic and hardened states. A structural grout, SikaGrout 212 provides the advantage of multiple fluidity with a single component. SikaGrout 212 meets ASTM C-1107 (Grade C).

Where to Use

- Use for structural grouting of column base plates, machine base plates, anchor rods, bearing plates, etc.
- Use on grade, above and below grade, indoors and out.
- Multiple fluidity allows ease of placement: ram in place as a dry pack, trowel-apply as a medium flow, pour or pump as high flow.

Advantages

- Easy to use. . . just add water.
- Multiple fluidity with one material.
- Non-metallic, will not rust or stain.
- Low heat build-up.
- Excellent for pumping: Does not segregate. . . even at high flow. No build-up on equipment hopper.
- Superior freeze/thaw resistance.
- Resistant to oil and water.
- Meets ASTM C-1107 (Grade C).
- Shows positive expansion when tested in accordance with ASTM C-827.
- SikaGrout 212 is USDA approved.

Coverage

Approximately .44 cu. ft./bag at high flow.

Packaging

50-lb. multi-wall bags; 36 bags/pallet.

How to Use

Surface Preparation

Remove all dirt, oil, grease, and other bond-inhibiting materials by mechanical means. Anchor bolts to be grouted must be de-greased with suitable solvent. Concrete must be sound and roughened to a CSP 4 or higher to promote mechanical adhesion. Prior to pouring, surface should be brought to a saturated surface-dry condition. Steel should be cleaned and prepared thoroughly by blast cleaning to a white metal finish. Follow standard industry and Sika guidelines for use as an anchoring epoxy.

For pourable grout, construct forms to retain grout without leakage. Forms should be lined or coated with bond-breaker for easy removal. Forms should be sufficiently high to accommodate head of grout. Where grout-tight form is difficult to achieve, use SikaGrout 212 in dry pack consistency.

Typical Data *(Material and curing conditions @ 73°F (23°C) and 50% R.H.)*

RESULTS MAY DIFFER BASED UPON STATISTICAL VARIATIONS DEPENDING UPON MIXING METHODS AND EQUIPMENT, TEMPERATURE, APPLICATION METHODS, TEST METHODS, ACTUAL SITE CONDITIONS AND CURING CONDITIONS.

Shelf Life	One year in original, unopened bags.
Storage Conditions	Store dry at 40°-95°F (4°-35°C).
Product Conditioning	Condition material to 65°-75°F before using.
Color	Concrete gray

Flow Conditions (ASTM C-109, Plastic & Flowable; ASTM C-939, Fluid)		Plastic	Flowable	Fluid
Typical Water Requirements		6 pt.+	6.5 pt.	8.5 pt.
Set Time (ASTM C-266)	Initial	3.5-4.5 hr.	4.0-5.0 hr.	4.5-6.5 hr.
	Final	4.5-5.5 hr.	5.5-6.5 hr.	6.0-8.0 hr.
Tensile Splitting Strength, psi (ASTM C-496)	28 day	600(4.1 MPa)	575 (3.9 MPa)	500 (3.4 MPa)
Flexural Strength, psi (ASTM C-293)	28 day	1,400 (9.6 MPa)	1,200 (8.2 MPa)	1,000 (6.8 MPa)
Bond Strength, psi (ASTM C-882 modified) Hardened concrete to plastic grout	28 day	2,000(13.7 MPa)	1,900 (13.1 MPa)	1,900 (13.1 MPa)
Expansion % (ASTM C-1090)	28 day	+0.021%	+0.056%	+0.027%
Compressive Strength, psi (ASTM C-942)	1 day	4,500 (31 MPa)	3,500 (24.1 MPa)	2,700 (18.6 MPa)
	7 day	6,100 (42 MPa)	5,700 (39.3 MPa)	5,500 (37.9 MPa)
	28 day	7,500 (51.7 MPa)	6,200 (42.7 MPa)	5,800 (40 MPa)

Mixing	Mix manually or mechanically. Mechanically mix with low-speed drill (400-600 rpm) and Sika mixing paddle or in appropriately sized mortar mixer. Make sure all forming, mixing, placing, and clean-up materials are on hand. Add appropriate quantity of clean water to achieve desired flow. Add bag of powder to mixing vessel. Mix to a uniform consistency, minimum of 2 minutes. Ambient and material temperature should be as close as possible to 70°F If higher, use cold water; if colder, use warm water. Product Extension: For deeper applications, SikaGrout 212 (plastic and flowable consistencies only) may be extended with 25 lbs. of 3/8" pea gravel. The aggregate must be nonreactive, clean, well-graded, saturated surface dry, have low absorption and high density, and comply with ASTM C33 size number 8 per Table 2. Add the pea gravel after the water and SikaGrout 212.
Application	Within 15 minutes after mixing, place grout into forms in normal manner to avoid air entrapment. Vibrate, pump, or ram grout as necessary to achieve flow or compaction. SikaGrout 212 must be confined in either the horizontal or vertical direction leaving minimum exposed surface. SikaGrout 212 is an excellent grout for pumping, even at high flow. For pump recommendations, contact Technical Service. Wet cure for a minimum of 3 days or apply a curing compound which complies with ASTM C-309 on exposed surfaces.
Tooling and Finishing	After grout has achieved final set, remove forms, trim or shape exposed grout shoulders to designed profile.
Limitations	■ Minimum ambient and substrate temperature 40°F and rising at time of application. ■ Minimum application thickness: 1/2 in. ■ Typical maximum application thickness (neat) is 2", however, thicker applications can be achieved. Contact Sika's Technical Services Department (800-933-7452) for further information. ■ Do not use as a patching or overlay mortar or in unconfined areas. ■ Material must be placed within 15 minutes of mixing. ■ As with all cement based materials, avoid contact with aluminum to prevent adverse chemical reaction and possible product failure. Insulate potential areas of contact by coating aluminum bars, rails, posts etc. with an appropriate epoxy such as Sikadur Hi-Mod 32.
Caution	**WARNING: IRRITANT.** Contains Quartz (SiO_2) (CAS:14808-60-7) and Portland Cement (CAS:65997-15-1). Causes skin/respiratory tract irritation. Causes severe eye irritation. May cause eye injury, effect may be delayed. Harmful if swallowed. **WARNING.** This product contains a chemical known in the State of California to cause cancer.
First Aid	**Eyes** - Hold eyelids apart and flush thoroughly with water for 15 minutes. **Skin** - Remove contaminated clothing. Wash skin thoroughly for 15 minutes with soap and water. **Inhalation** - remove to fresh air. **Ingestion** - Do not induce vomiting. Dilute with water. Contact physician. **IN ALL CASES CONTACT A PHYSICIAN IMMEDIATELY IF SYMPTOMS PERSIST.**
Handling and Storage	Suspect carcinogen - contains portland cement and crystalline silica. Skin and eye irritant. Avoid breathing dust. May cause delayed lung injury (silicosis). IARC lists crystalline silica as having sufficient evidence of carcinogenicity in laboratory animals and limited evidence of carcinogenicity in humans. NTP also lists crystalline silica as a suspect carcinogen. Avoid direct eye contact. Wear personal protective equipment (chemical resistant goggles/gloves/clothing) to prevent contact with skin or eyes. Use only in well ventilated areas. Open doors and windows during use. Use properly fitted NIOSH respirator if ventilation is poor. Wash thoroughly with soap and water after use. Remove contaminated clothing and launder before reuse.
Clean Up	Use personal protective equipment (chemical resistant goggles/gloves/clothing). Without direct contact, sweep up spilled or excess product and place in suitable sealed container. Dispose of in accordance with current applicable local, state and federal regulations. Uncured material can be removed with water. Cured material can only be removed mechanically.

KEEP CONTAINER TIGHTLY CLOSED • KEEP OUT OF REACH OF CHILDREN • NOT FOR INTERNAL CONSUMPTION • FOR INDUSTRIAL USE ONLY

All information provided by Sika Corporation ("Sika") concerning Sika products, including but not limited to, any recommendations and advice relating to the application and use of Sika products, is given in good faith based on Sika's current experience and knowledge of its products when properly stored, handled and applied under normal conditions in accordance with Sika's instructions. In practice, the differences in materials, substrates, storage and handling conditions, actual site conditions and other factors outside of Sika's control are such that Sika assumes no liability for the provision of such information, advice, recommendations or instructions related to its products, nor shall any legal relationship be created by or arise from the provision of such information, advice, recommendations or instructions related to its products. The user of the Sika product(s) must test the product(s) for suitability for the intended application and purpose before proceeding with the full application of the product(s). Sika reserves the right to change the properties of its products without notice. All sales of Sika product(s) are subject to its current terms and conditions of sale which are available at www.sikausa.com or by calling 800-933-7452.

Prior to each use of any Sika product, the user must always read and follow the warnings and instructions on the product's most current Technical Data Sheet, product label and Material Safety Data Sheet which are available online at www.sikausa.com or by calling Sika's Technical Service Department at 800-933-7452. Nothing contained in any Sika materials relieves the user of the obligation to read and follow the warnings and instruction for each Sika product as set forth in the current Technical Data Sheet, product label and Material Safety Data Sheet prior to product use.

LIMITED WARRANTY: Sika warrants this product for one year from date of installation to be free from manufacturing defects and to meet the technical properties on the current Technical Data Sheet if used as directed within shelf life. User determines suitability of product for intended use and assumes all risks. Buyer's sole remedy shall be limited to the purchase price or replacement of product exclusive of labor or cost of labor. **NO OTHER WARRANTIES EXPRESS OR IMPLIED SHALL APPLY INCLUDING ANY WARRANTY OF MERCHANTABILITY OR FITNESS FOR A PARTICULAR PURPOSE. SIKA SHALL NOT BE LIABLE UNDER ANY LEGAL THEORY FOR SPECIAL OR CONSEQUENTIAL DAMAGES. SIKA SHALL NOT BE RESPONSIBLE FOR THE USE OF THIS PRODUCT IN A MANNER TO INFRINGE ON ANY PATENT OR ANY OTHER INTELLECTUAL PROPERTY RIGHTS HELD BY OTHERS.**

Visit our web site at www.sikausa.com **1-800-933-SIKA NATIONWIDE**

Regional Information and Sales Centers. For the location of your nearest Sika sales office, contact your regional center.

Sika Corporation
201 Polito Avenue
Lyndhurst, NJ 07071
Phone: 800-933-7452
Fax: 201-933-6225

Sika Canada Inc.
601 Delmar Avenue
Pointe Claire
Quebec H9R 4A9
Phone: 514-697-2610
Fax: 514-694-2792

Sika Mexicana S.A. de C.V.
Carretera Libre Celaya Km. 8.5
Fracc. Industrial Balvanera
Corregidora, Queretaro
C.P. 76920
Phone: 52 442 2385800
Fax: 52 442 2250537

Maine Drilling & Blasting

Installation Log

Grouting and Placement Log

Project - Rochester, VT - Bridge 16

Foreman:

Maine Drilling & Blasting

#1 -Grouting through Anchor (Drilling Phase)	Date:	Depth to rock (ft):	# Bags of Grout:	Bond length (ft):	Total Anchor Length (ft):
	Drilling Notes:		Grouting Notes:		
#1 Grouting From the Top (as neccesary)	# Bag of Grout:	Settlement Comments:			

#2 -Grouting through Anchor (Drilling Phase)	Date:	Depth to rock (ft):	# Bags of Grout:	Bond length (ft):	Total Anchor Length (ft):
	Drilling Notes:		Grouting Notes:		
#2 Grouting From the Top (as neccesary)	# Bag of Grout:	Settlement Comments:			

#3 -Grouting through Anchor (Drilling Phase)	Date:	Depth to rock (ft):	# Bags of Grout:	Bond length (ft):	Total Anchor Length (ft):
	Drilling Notes:		Grouting Notes:		
#3 Grouting From the Top (as neccesary)	# Bag of Grout:	Settlement Comments:			

#4 -Grouting through Anchor (Drilling Phase)	Date:	Depth to rock (ft):	# Bags of Grout:	Bond length (ft):	Total Anchor Length (ft):
	Drilling Notes:		Grouting Notes:		
#4 Grouting From the Top (as neccesary)	# Bag of Grout:	Settlement Comments:			

Safety Plan

Maine Drilling & Blasting - Bridge 16 - Vtrans
Job Hazard Analysis
Rock Bolting

Required PPE for Rock Bolting Activities will include: Hard Hats, Safety Glasses, Steel Toed Boots, High-Visibility Vest, Hearing Protection, Rubber Gloves (Long, Guantlet Style), Rain Gear, Face Shield

1. General Site Activities

Activity	Hazards	Corrective Actions	Comments
All	Multiple	Hard hats, glasses, steel toed boots and high visibility clothing must be worn at all times.	
Handling equipment	Cuts, Splinters, abrasions	Wear work gloves whenever handling materials	
Working around or under other activities	Falling objects, other equipment, tools, materials, etc	Stand clear and wait until others are done working	
Working around equipment	Struck by equipment, crushed, or caught in pinch point	Be Aware or other operations, demarcate your work area by strategically positioning our trucks, equipment and materials, also use painted boxes, cones, etc.	
Accessing work areas	Slips, trips, falls	Maintain good access in and out of the work area by maintaining a clear path free of rocks, materials, and other objects than one must walk over, keep area sanded in the winter months, remove mud or other slick surfaces to ensure proper footing	

2. Setting Up Job Site

Activity	Hazards	Corrective Actions	Comments
Loading/unloading materials	Falling materials, sprains and strains	Don't stack boxes or grout bags taller than shoulder height	
	Falling Objects	Don't set up shop or storage area under high walls or under other construction activities	
	Slips, Trips, Falls	Secure loose tarps, maintain proper access by not obstructing pathways, plan out storage areas, as some bolts can be 50' long, you will need room for prepping bolts.	
Site Maintenance	Slips, Trips, Falls	Observe good housekeeping, clean up empty boxes, bags and other waste material	
		Keep sand and ice melter on site (Check with contractor to see if there are any restrictions on the use of salt or calcium chloride)	
		Create drainage paths to eliminate any standing water in the work area	
Set Up Equipment	Slips, Trips, Falls, struck by or crushed by rolling or tipping equipment and vehicles	Set grout and grout pump on secure, flat ground, level as needed, park vehicles, trailers, and compressors on level ground and chock the wheels	
Working on and around existing foundations	Slips, Trips, Falls	Ensure that all keyways, holes, and other voids are properly covered	
	Impalement	Ensure that all exposed ends of rebar is capped or adequately protected. (Also look around for broken or pointed grade stakes that may also present a hazard	
Material Handling	Sprains and strains	Only try to lift within your capacity, utilizing safe lifting techniques, back straight, load close to the body, and lift with your legs…get help with heavy loads and use equipment when necessary	

3. Drilling and Work Around Drills

Activity	Hazards	Corrective Actions	Comments
Pre-Shift Inspection	Equipment failure or malfunction	Perform a full pre-shift inspection to ensure proper operation of the drill. Inspect each item listed on the daily inspection sheet.	
Work along highwalls	Wall Collapse, crushing, and equipment damage	Perform a through visual inspection of the work area prior to starting work. Look for any fissures at the top of the wall. From the bottom, look for any slips, loose material or water. Stay away from under the highwall. If work must be performed under the highwall, keep the equipment between the highwall and you, use potters to identify changes in conditions as you drill.	
	Falls	Inspect, Set Up and use personal fall arrest equipment (Harness, Lanyard, Rated Rope, and Dead Man) prior to working within 10' of any 6' fall. Adjust the rope as to limit your access to the edge, and no more.	
Drilling Bolt Holes	High Noise Levels	Mandatory use of hearing protection required while drilling.	
	Rotating & Moving Parts	Keep hands and feet away from moving parts. Avoid loose clothing, long hair and jewelry.	
	Silica Dust	Maintain dust collection system including skirting and filters. Use water spray (vaporsol) in conjunction with the dust collection system. Orient drills and have crews work upwind of dusty operations.	
	Utilities	Keep at least 10' away from overhead wires. Visually inspect the ground for potential underground installations - Digsafe is not 100% - look for telltales of underground utilities (manhole covers, transformer pads, vents, old markings on the roadway or building, gas meters, water meters, remember: most buildings have some underground utilities running to them. Ask the contractor to see the site plans.	

	Sprains and Strains	Get help while handling drill steel, it is a two man job. Follow the specific requirement for the drill you are operating. When in doubt on the proper technique consult the maintenance department.	
	Foot injuries from dropping bits/steel/couplers	Steel toed boots are mandatory.	
	Tip over drill and strike others and equipment	Know your drill area and the limitations of the drill. Be aware of your surroundings and where the rest of the crew is.	
Tram Drill	Tip over drill	Centralize boom while tramming and avoid steep slopes.	
	Crushed by the drill	Tram from the proper platform, don't walk along side the drill.	
	Strike Overhead lines	Install "Overhead Hazard" signs in all locations where the drill must travel under or work within 10' of any overhead line. Fold back the boom while tramming, this doesn't only reduce the risk of striking a line, it lowers the drills center of gravity, making it more stable.	
Fuel Drill	Fire	Do not smoke while fueling or working around the fuel trailer. Clean up any spills immediately and dispose of any fuel soaked rags. Only transfer fuel in pumps provided by the company.	
	Spills	Pay attention while fueling, do not overfill the tanks, as expansion occurs when the fuel heats up. Make sure that there is a sufficient vent, so that vacuum does not collapse the tank when pumping from it.	

4. Prepping & Setting Bolts

Activity	Hazards	Corrective Actions	Comments
Handling Bolts	Sprains and Strains	DO NOT TRY TO LIFT BOLTS - they are too heavy, use the proper equipment.	
	Cuts	Wear gloves, the bolt threads may be sharp	
Hoisting bolts	Falling load	Use proper rigging for your bolts, and inspect it prior to each lift.	
	Swinging load	Utilize tag lines to minimize the load swinging and spinning	
	Struck by load	Designate one person to give hoisting signals. Only allow crucial personnel in the hoisting areas	
	Struck by crane	Do not enter the "swing radius" of the crane, without eye contact from the operator.	
Setting Bolts	Pinches	Keep hands and feet away from bolt hole while inserting the bolt. Step away and don not be under the bolt.	
Cutting Bolts with Port-a-Band	Cuts	Follow manufactures recommendations for the use of the saw. Ensure that the blade is in good working order. The shavings are "needle-like" wear gloves.	
	Falling material	If the cut off piece is small, have a helper hold the end while cutting. If it is large, utilize horses or dunnage to prevent the piece from free falling.	
Coupling Bolts	Struck by Bolt, falling bolt	Utilize the proper "bolt plate" when securing the bolt in the hole prior to coupling	
	Uncoupling	Ensure full penetration of threads within the couple. Ensure that they are tightened with wrenches.	
Cutting Grout Tube	Cuts	When using knifes always cut away from your body. Keep knifes sharp. Put all bladed tools away when finished.	

5. Grouting

Activity	Hazards	Corrective Actions	Comments
All Grouting Activities	Eye Injuries	Face shield is mandatory (Along with Safety Glasses) for all grouting activities.	
Lifting Grout Bags	Sprains and Strains	Use proper lift techniques. When possible rotate job responsibilities so that one guy does not have to do all the heavy labor. Consider the use of smaller grout bags rather than the 94 pound bags.	
Handling Grout	Chemical Burns	Avoid Contact with skin. Use Gauntlet Gloves, or duct tape the seam between the glove and long sleeves. Keep vinegar on hand to neutralize the grout when skin contact does occur.	
Mixing Grout	Grout Dust	Utilize best practices to minimize dust generation while opening bags: Open bags slowly and allow bags to empty into mixer, don't lift and shake, Hood (tarp) the mixer to help contain dust, Set up mixer adjacent to drill or compressor, to allow the fan to help blow dust away from the operation.	
	Pinch Point	Keep hand out of mixer whenever air is connected!	
	Struck by equipment	Utilize whip checks on all air hose connections	
	Slips, Trips, Falls	Pick Up empty grout bags	
Pumping Grout	Spraying Grout	Keep clear of spout and use hose clamps. Properly clamp grout hose or the pressure will blow the connection apart. Do not point the spot toward your face or any other person	
Unclogging Grout Hose	Spraying Grout	Cover connectors (with empty bags) while disconnecting to prevent fugitive grout release. Tremendous pressures can build up within the hoses (up to 1000 pounds).	
Heating Grout Pump	Burns/Fire	Keep clear of heating unit, and keep it away from grout bags.	
	Suffocation	Use heaters only when there is plenty of ventilation	
Cleaning Grout Pump	Sprains, Strains, Contusion Injuries	Turn off and disconnect power supply prior to performing any maintenance or cleaning.	

6. Testing Bolts

Activity	Hazards	Corrective Actions	Comments
Hoisting Jack	Strains, Sprains	Use hoisting equipment!	
Pressurizing Bolts	Sprains and Strains	Use two men to hoist the jack and set into place	
	Blown hydraulic hoses	Stand away from the jack when it is under pressure, so that a hose rupture will not effect you.	
	Struck by jack/bolt/etc	Always stand back and away from the jack. High pressures can rip the bolt out of the hole. Hardware can fail, and you don't want to be around when it does.	
	Etc.	Read and understand the manufacturers requirements for jack use.	
Moving Equipment	Equipment Damage	Use Spotters, make sure doors are shut and Latched	

Personnel (Name Printed)	Signature	Personnel (Name Printed)	Signature

Safety Manual

Table Of Contents

Page 2. Statement of Policy
3. Public Responsibility
4. Objectives
6. Responsibilities
8. EEO
13. Sexual Harassment Policy
15. Definitions
17. Safety Meeting Policy
19. Safety Committee
22. Annual Safety Training
23. Safety Inspections
31. Magazine Sites
35. New Hire Orientation
36. General Work Rules
38. Non-Compliance Policy
42. Motor Vehicle Safety Policy
47. Equipment Safety Policy
48. Seismograph Policy
50. Drug/Controlled Substance Policy
55. Personal Protective Equipment Policy
64. Emergency Procedures
73. Hazardous Material Policy
78. Hazard Communication Program

Maine Drilling & Blasting, Inc.
P.O. Box 1140
423 Brunswick Avenue
Gardiner, ME 04345
207.582.2338
207.582.8794 FAX

Divisional Offices
Connecticut 860.242.7419
Maine 207.582.2338
Massachusetts/RI 508.478.0273
New Hampshire 603.647.0299
New York 518.632.9170
Pennsylvania 800.422.4927
Vermont 802.479.3341

Setting Earth-Shattering Standards Since 1966 • An Equal Opportunity Employer

Statement of Policy

I believe the primary responsibility of Maine Drilling & Blasting, Inc. is to make the safety and health of our employees, our customers, and the public its daily concern.

Everyone who has a part in the affairs of the Corporation, no matter must accept this responsibility in what capacity they function.

It is the policy of this Company, therefore, to provide and maintain safe and healthful working conditions, to follow operating practices that will safeguard all employees and result in safe and efficient operations.

To this end, Maine Drilling & Blasting, Inc. will provide a safe workplace, safe equipment, and will establish and insist upon safe methods and practices from its employees at all times. Maine Drilling & Blasting, Inc. will also provide such training and education for employees and supervisors as is required for compliance with local, state and federal regulatory requirements including MSHA, OSHA, and DOT

William D. Purington, President and CEO

Public Responsibility

Maine Drilling & Blasting recognized the potential hazards involved in handling explosives. For this reason, we insist that all our employees observe and obey all rules governing the use, handling or transportation of explosives – especially where we come in contact with the general public.

For maximum safety for yourself and the public, be sure to follow explicitly, recommended procedures throughout each state of the explosives handling operation. This includes the entire process from the receipt of explosives from the manufacturer through storage, transportation, handling on the job, loading, firing, and finally examining the results to assure that all explosives functioned properly.

Each year an unnecessarily large number of children are seriously injured by blasting caps despite a vigorous safety campaign waged by the manufacturers. It is extremely important that the greatest care be exercised to keep caps locked up when not in use. They must not be mislaid or allowed to fall into the wrong hands. For the young or inexperienced, the caps represent a potential danger that may result in injury, disability or even death.

In addition to your responsibility for public safety, it is only good sense to observe good practices. Remember it is common practice today to hold the owner responsible for injuries that result from careless guarding of explosives. This is especially true in lawsuits involving children.

So – protect the public – protect property - protect our Company – protect your job – BE CAREFUL!

Objectives

The prime objective of Maine Drilling & Blasting's safety policy is to eliminate or reduce the possibility of injury or suffering to our employees, or injury or property damage to our customers and the public.

By accomplishing this, we will also benefit from increased efficiency, reduced unplanned business interruptions, and a resultant reduction in insurance premiums.

Method of Obtaining Objectives

The effectiveness of this program depends upon the participation and cooperation of every employee and the coordination of their efforts in carrying out the following basic tasks:

Complete knowledge and understanding of the safety policy.

Plan all work to eliminate personal injury, minimize property damage, and avoid loss of productive time.

Conduct daily operations in strict accordance with the safety program.

Communicate safety standards to other Company employees.

Making available and enforce the use of personal protective equipment and mechanical guards.

Understand and comply with the various regulating agencies governing our industry.

Establish an effective system to project, tool and equipment inspection and maintenance.

Complete up-to-date records, log books, inventories, physicals, etc.

Regular, timely safety meetings.

Use of bulletins, posters, visual aids, and other media that will keep safety at the head of your "Things to Do" list.

Organization – Responsibilities

As in any group or Company, specific levels of responsibilities must be defined so that each level of employee knows what is expected of them and where they fit into the overall program.

The following is a general outline of the safety responsibilities of Maine Drilling & Blasting, Inc.:

President
Full responsibility for overall Company safety policies.
Decided on safety policies and procedures as formulated by Corporate / Safety Committee, Regional Managers and employee suggestions.
Participates in safety programs.

Division Managers
Maintain full knowledge of safety policy.
Full responsibility for division employee compliance with Company safety policy.
Educate all employees in Company safety policies.
Enforce all Company safety policies.
Responsible for all safety operations within their areas.
Responsible for regional compliance with all Federal, State and local safety standards.
Participate in safety programs.
Reports all safety issues to President.
Chairs division safety committee meetings.

Safety Specialists
Enforces all safety policies and regulatory requirements.
May authorize necessary expenditures for safety.
Administer and coordinate the safety program.
Maintains records, reports and information beneficial to efficient safety operations.
Trains and supervises employees in Company safety programs.
Performs job site inspections on a regular basis and assist with corrective actions as required.
Assure compliance with regulations.
Coordinate insurance activities including claim investigation, loss control, review of reserves, etc.
Reports to Employee Services Manager.

Blaster / Foreman
Enforce Company safety policy and procedures.
Responsible for the conduct of their crews in accordance with Company safety policy.
Assure a safe work place including housekeeping, proper tools, equipment, etc.
Explain, train and enforce the wearing of personal protective equipment (i.e. e. ear plugs, hard hats, dust filters, etc.)
Assure the safety of the crew and protect local personnel and property.
Conduct weekly safety meetings for assigned personnel and assure participation.
Assure that completed logs, cost sheets, etc., are turned in on time to assure proper billing and administration.
Report all hazards and violations to Division Manager.

Drillers and Laborers

Participate in safety meetings as required.
Work in accordance with accepted safe practices of Company and regulators agencies.
Report unsafe conditions or practices.
Take no unnecessary risks.
Be familiar with all rules and regulations governing our industry.
Report all hazards and violations to Division Manager.
Attend annual safety trainings.

Maintenance, Mechanics, Drivers

Assure a safe work place, including housekeeping, tools, and equipment – both in garage areas as well as in the field.
Report all unsafe conditions.
Take no unnecessary risks.
Assure compliance with Company, state and federal regulations and safe practices.
Report all hazards and violations to Division Manager.
Attend annual safety trainings.

Maine Drilling & Blasting, Inc.

March 1, 2001

Equal Opportunity Employment

The Company recognizes the dignity of the individual employee and the right of all employees to work in an environment where people are treated fairly, allowed to grow and achieve their potential. Federal and State law and Company policy require all employees or potential employees be hired and/or promoted without regard to race, color, religion, handicap or disability, Vietnam Era veteran status, sex, age or national origin. It is the intent of the Company through this policy to provide a working environment that provides for equal employment opportunities to all.

The company has an action plan to ensure that minority group individuals, women, handicapped persons and disabled and Vietnam Era veterans are given opportunities to know of openings and are encouraged to seek promotions. Equal opportunity and equal consideration will be given to all applicants and employees in personnel actions which include recruiting and hiring, selection for training, promotion, demotion, discipline, rates of pay or other compensation, transfer, termination, recalls and social and recreational programs.

Every manager, supervisor and human resource personnel are required to follow equal opportunity employment practices at all times.

Any violations of these equal opportunity policies by any manager, supervisor or other employee must be reported immediately to:

Lucinda L. Long
Employee Services Manager
Maine Drilling & Blasting, Inc.
P. O. Box 1140 – Brunswick Road
Gardiner, Maine 04345
207-582-2338

March 1, 2001

Affirmative Action Plan

It is the continuing policy of Maine Drilling & Blasting, Inc. to hire and employ qualified, reliable and productive employees without regard to race, creed, religion, color, sex, national origin, age, veteran's status and mental or physical handicap unless a lawful and stated bona fide occupational disqualification exists. In order to implement this policy, the company has adopted an affirmative action program.

Maine Drilling & Blasting, Inc. will:

Advertise for employment opportunities as an EEO employer. All employment advertisement will encourage women and minority applicants to apply.

Maintain contact with community resources for applicant referral purposes.

Provide OJT training and allow for in-house advancement for employees without regard to race, creed, religion, color, sex, age, national origin, disabled or Vietnam Era veteran status, or physical or mental handicap.

Cooperate with federal, state or local government agencies that have the responsibility to observe our actual compliance with various laws relating to employment.

Furnish such reports, records, etc. as required to document and promote a program of equal opportunity for all persons regardless of race, creed, religion, color, sex, age, national origin, disabled or Vietnam Era veteran status, or physical or mental handicap.

Appoint a Corporate EEO officer who will be charged with the responsibility of compliance issues of this plan.

Post the identity of the Corporate EEO officer on company bulletin boards.

Provide EEO training of Officers, Managers and Supervisors who have the overall responsibility of carrying out company Equal Employment Opportunity policies in their respective work areas.

Provide training on an annual basis for employees with regard to EEO and Sexual Harassment Policies.

EEO Complaint Procedure

How To Report An EEO Complaint:

1. Report the complaint to the Corporate Employee Services Manager
2. If the individual who is the subject of the complaint is the Employee Services Manager, report the complaint directly to the **President.**

EEO Complaint Report Required Action

An investigation of all EEO complaints will be conducted by the **Corporate Employee Services Manager** to determine if particular action or incident is either prohibited behavior or is discriminatory under EEO guidelines.

When a complaint is filed, the corporate EEO Officer will:

-Immediately notify the President and any personnel directly involved or named in the complaint. Such notice will provide information on the nature and type of complaint.
-Conduct an investigation of the complaint.
-Determine all available facts and information regarding the matter.
-Provide a written report outlining the results of the investigation including any recommendations for corrective actions or complaint resolution.
-In cases of gross misconduct and/or clear violation of the law, immediate and direct corrective action will be taken.

Corrective Action – Complaint Resolution

The Company will:

-Inform the complainant of the results of the investigation.
-Conduct an arbitration hearing to resolve the complaint through mutual conciliation.
-The complainant shall agree to all actions taken on their behalf including the specific actions to be taken by the employer.

Employees are protected at all times from retaliation or punishment when making an EEO complaint.

Disciplinary Action

Violation of the EEO Policy is unacceptable conduct and will not be condoned or tolerated by the Company. It undermines the integrity of the employment relationship, destroys morale and interferes with performance. Violation of the EEO policy is considered grounds for disciplinary action, which may include suspension or termination of employment.

Responsibility

Managers, Supervisors and employees at all levels are responsible for:
-Implementing and enforcing this policy.
-Assisting in investigating and processing complaints quickly, professionally and with respect for all parties.
-Assuring the prevention of any discriminatory practices within their areas of responsibility.

Every employee is responsible for reporting any incident of discrimination that they learn of or witnesses. Management will maintain the highest degree of confidentiality possible with respect to such complaints and is obligated to investigate all complaints.

Legal Rights

This policy governs only the internal enforcement of the principles of Equal Employment Opportunity and is not intended to alter whatever rights an employee has to pursue a complaint under applicable State of Federal regulations.

Notice of Discrimination Complaint

Name: _____
Address: _____
_____
Phone #: _____
Date of Hire: _____
Division: _____
Supervisor: _____

Facts of Alleged Incident

Name(s) of Person(s) Involved: _____
_____

Date of Incident: _____

Location of Incident: _____

Name(s) of Witness(es) _____
_____

Describe What Happened:
_____
_____
_____
_____
_____
_____

_____ _____
Employee Signature Date

_____ _____
Company Representative Date

030101

March 1, 2001

Sexual Harassment Policy

Policy Statement:

The Company recognizes the dignity of the individual employee and the right of all employees to work in an environment, which is free of sexual intimidation and harassment. Such intimidation or harassment based on sex violates Federal and State law and Company policy. It is the intent of the Company through this policy to provide a working environment that is free of sexual harassment and discriminatory practices.

This policy is written and intended to protect employees from sexual harassment by supervisors and/or coworkers. Sexual harassment by non-employees is also covered under this policy when employees are required to be in contact with non-employees.

Definition:

The EEOC Guidelines define sexual harassment as follows:

"Unwelcome sexual advances, requests for sexual favors, and other verbal or physical conduct of a sexual nature constitute harassment when:

1. Submission to such conduct is made either explicitly or implicitly a term or condition of an individual's employment.
2. Submission to or rejection of such conduct by an individual is used as the basis for employment decision affecting such individual.
3. Such conduct has the purpose or effect of substantially interfering with an individual's work performance or creating an intimidating, hostile, or offensive working environment."

Sexual harassment charges may come from any of the following actions:

1. Threats
2. Basing employment decisions or practices on submission to sexual favors.
3. Unwelcome sexual advances, gestures, comments or contact.
4. Offensive or demeaning jokes.
5. Subjecting employees to ridicule, slurs or derogatory actions.
6. Subjecting employees to sexual pictures, photos, cartoons, etc.
7. Comments about a person's anatomy.

Sexual harassment can take place between members of the same sex as well as members of the opposite sex.

Disciplinary Action

Sexual harassment is unacceptable conduct and will not be condoned or tolerated by the Company. It undermines the integrity of the employment relationship, destroys morale, interferes with performance and demeans its victims. Sexual harassment is considered grounds for disciplinary action which may include suspension or termination of employment.

How To Report Sexual Harassment:

Any employee with a complaint about sexual harassment should:

1. Report the complaint to their direct supervisor. The supervisor must immediately report the complaint to the Corporate Administrative Manager.
2. If the individual who is the subject of the complaint is the employee's direct supervisor, the employee may report the complaint directly to the President.

Sexual Harassment Report Required Action:

A confidential investigation of any complaint of sexual harassment will be conducted by the Corporate Employee Services Manager. The question of whether a particular action or incident is either prohibited behavior or is non-discriminatory requires a determination based upon all available facts and information regarding the matter. The notification and involvement of the direct supervisor of the employee will depend on the facts of the case.

If a complaint involves a difference of opinion or a misunderstanding, action will be taken to improve the mutual understanding between the parties, if possible. Various options will be developed and explored. The reporting employee shall generally agree to all actions taken on his/her behalf, including who will be told of the complaint and the
specific actions to be taken by the employee.

The Company will first provide an opportunity to resolve the complaint through counseling, informal confrontation or conciliation. If any of these methods are not effective or appropriate more direct methods will be agreed to and implemented.

In cases of gross misconduct and clear violation of the law, immediate and direct action will be taken and the reporting employee and their Division Manager will be informed of the action before it is taken.

Employees are protected at all times from retaliation or punishment when making a sexual harassment complaint.

Responsibility

Managers, Supervisors and employees at all levels are responsible for implementing and enforcing this policy and for assisting in investigating and processing employees complaints quickly, professionally and with respect for all parties. They are also responsible to actively prevent and eliminate sexual harassment within their areas
of responsibility.

Every employee is responsible for reporting any incident of sexual harassment that they learn of or witness. Management will maintain the highest degree of confidentiality possible with respect to such complaints consistent with its obligation to investigate all complaints.

Legal Rights

This policy governs only the internal enforcement of the principles of Equal Employment Opportunity and is not intended to alter whatever rights an employee has to pursue a complaint under applicable State or Federal regulations.

Safety Manual Definitions

Accident: Any unexpected event that interrupts or interferes with the orderly progress of the work that results in bodily injury or property damage.

Commercial Drivers License (CDL): A license required by all states for any driver operating a commercial vehicle. Every commercial vehicle driver is required to hold a valid commercial drivers license endorsed for hazardous material. Additional endorsements may be required per your vehicle use (i.e. air brakes, tanks, etc.)

Commercial Vehicle: A vehicle used for inter or intra state business weighing 26,000 lbs. or one which requires placarding for hazardous materials is considered a commercial vehicle. Operators of commercial vehicles must have a CDL.

Company Any Vehicle: Any vehicle owned or leased by Maine Drilling & Blasting, Inc.

Controlled Substance: Controlled substances are defined as opiates and opium derivatives such as heroin, marijuana, cocaine, stimulants, depressants and hallucinogenic substances or any drug referenced in Schedule I of the Schedule of Controlled Substances for the Drug Enforcement Agency.

Corporate Safety Committee: Safety Committee comprised of safety specialists and management representatives charged with the review of all division and employee safety issues and recommendations and the formulation of safety policies, risk management and related topics.

DOT Card: A card issued by a physician who certifies a driver has met all the physical criteria for CDL licensing. Every commercial vehicle driver is required to have passed physical examinations as required by state and federal agencies.

Driver: A driver is any employee operating a Company vehicle having a vehicle or combined weight rating in excess of 26,000 lbs or a vehicle, which requires placarding for the transportation of hazardous materials.

Drug / Controlled Substance Screening: The testing of urine for evidence of use of drugs or controlled substance.

Endorsement (Drivers License): Any special endorsements which may be added to your CDL which require special written tests for purpose of qualifications.

Impairment: To be under the influence of a drug controlled substance so that a driver's motor senses (sight, hearing, balance, reflex or reaction) are adversely affected or may be presumed to be so affected.

Incident: Any unexpected event that interrupts or interferes with the orderly progress of work that does not result in bodily injury or property damage.

Job Site: See work site.

MSHA: Mine Safety and Health Administration. A Division of the U. S. Department of Labor.

Notice of Non- Compliance:

OSHA: Occupational Safety and Health Administration. A Division of the U. S. Department of Labor.

Possess: To have in or on the possession of the driver, the driver's motor vehicle, personal effects or areas trusted substantially to the control of the driver.

Safe Driving Record: A safe driving record shall be defined as one that meets the requirements of the state(s) in which you work, our insurance Company's rules and Maine Drilling & Blasting's own standards.

Safety Standards (Driver): Standardized guidelines developed by the Company and its insurance carrier as a method of assessing driver's records based upon motor vehicle convictions.

Sell or Transfer: To deliver to any other person for consideration, for free, or for any other reason.

Weigh Stations: A DOT inspection station. Any commercial vehicle weighting 26,000 lbs or more or any placarded commercial vehicle regardless of weight must stop at state weigh stations.

Work Site: Work site means any motor vehicle, office, building, construction site or quarry, yard or other property owned or operated by the Company, or any other location at which the driver is performing work as assigned.

General Safety Meeting Policy

The Company's Safety Policies and General Work Rules are maintained and enforced through management commitment, employee educations and training, regulatory requirements and general safety inspections. Various types of safety meetings are necessary to assure compliance with both Company policies and regulatory requirements. The Company has employed trained safety personnel to assist with training and enforcement of safety meeting activities.

The Company Safety Meeting Policy includes:
Guidelines and Procedures for Company designed safety meetings.
Guidelines and Procedures for compliance with regulatory requirements.
Employee responsibilities for safety meeting participation.
Meeting documentation and reporting requirements.
Annual calendar of safety/training events.

Company/regulatory safety meetings are listed below:

- Weekly
- Monthly Foreman / Employee Safety Committee
- Corporate Safety Committee
- Annual Safety Training

Each safety meeting process has specific requirements. To assure compliance with all requirements, individual procedures have been developed for each weekly meeting process and are described in the policies.

Weekly Safety Meeting Policy

In compliance with federal, state and Company safety requirements, weekly jobsite safety meetings are required. Jobsite personnel are to cooperate with and participate in jobsite safety meetings. To assure compliance, weekly safety meetings will be documented.

Company Responsibilities

The Company will provide for:

- Education and training of Safety Personnel to include regulatory requirements pertinent to jobsite safety.
- All necessary forms for purposes of documentation of the safety meeting process.
- Training of Field Personnel in requirements for acceptable jobsite safety meeting standards.
- A calendar of scheduled training/meeting date available in each division office. Weekly safety meetings are to be scheduled the first day of the workweek.

Employee Responsibilities

- Safety Specialists and Division Managers are responsible for employee compliance with management training schedules.
- Safety Specialists and Division Managers are responsible for follow-up corrective actions required for safety compliance.
- Safety Specialists are responsible for distribution of weekly safety meeting topic sheets.
- All employees are responsible for attending and participating in weekly jobsite safety meetings.
- All employees are to report unsafe conditions immediately to Safety Specialists for corrective action and follow-up.

Weekly Safety Meeting Reports (Heads up)

Weekly safety meeting reports will be utilized to:

- Evaluate jobsite safety conditions.
- Identify problem areas and training needs.
- Improve the quality of field safety.
- Address specific jobsite safety needs.
- Review non-compliance issues with employees, as required.
- Assess for Job of the Month requirements.
- Assess management and employee performance for job and annual review purposes.

Violations

Violations of this policy will be subject to disciplinary action per Company Compliance Policies.

MONTHLY EMPLOYEE SAFETY COMMITTEE POLICY

In compliance with federal, state and Company safety requirements, monthly Employee Safety Committee meetings are required. Employees are to participate in monthly employee safety meetings. To assure compliance, monthly Employee Safety Committee meetings will be documented. The monthly Employee Safety Committee will consist of not less than two management representatives and two employees.

COMPANY RESPONSIBILITIES

The Company will provide for:

- Education and training of Safety Personnel in the regulatory requirements pertinent to safety committee meetings.
- All necessary forms for purposes of documentation of the safety meeting process.
- Training of Employees for safety committee participation.
- A calendar of scheduled meeting dates. Calendars will be available in each Division office. Safety meetings are to be scheduled monthly in conjunction with monthly foreman's meetings.

EMPLOYEE RESPONSIBILITIES

- Safety Specialists and Division Managers are responsible for employee compliance with safety committee meeting schedules.
- Safety Specialists and Division Managers are responsible for follow-up corrective actions required for safety compliance.
- Safety Specialists are responsible for distribution of monthly agenda items.
- Safety Specialists / Employee participants are responsible for maintenance and distribution of meeting minutes.
- Employees are responsible for attending and participating in monthly Safety Employee Committee meetings.
- Employee participants are responsible for informing Safety Specialists of topics and areas of concern for inclusion in the monthly agenda.

PROCEDURES

- Schedule meetings annually on a monthly calendar.
- Prepare a meeting agenda and follow it.
- Assign a member to take notes/minutes of the meeting.
- Keep the meeting moving on schedule.
- Allow for opinions and discussion.
- Keep comments/suggestions positive and constructive.

MONTHLY SAFETY COMMITTEE MEETING REPORTS

Monthly safety meeting reports will be utilized to:

- Evaluate jobsite safety conditions.
- Identify problem areas and training needs.
- Improve the quality of field safety.
- Address specific jobsite safety needs.
- Review non-compliance issues with employees, as required.
- Make recommendations, suggestions for improvements and special needs or requests to Corporate Safety Committee.

VIOLATIONS

Violations of this policy will be subject to disciplinary action per Company Compliance Policies.

CORPORATE SAFETY MEETING POLICY

The Company's Safety Policies and General Work Rules are maintained and enforced through management commitment, employee education and training, regulatory requirements and general safety inspections. The Corporate Safety Committee will consist of trained safety personnel, management and one or more corporate officers.

COMPANY RESPONSIBILITIES

The Company will provide for:

- Education and training of Safety Personnel in all areas of regulatory requirements pertaining to safety.
- All necessary forms for purposes of documentation of the safety meeting process.
- A calendar of scheduled meeting dates. The calendar will be available in each division office. Corporate Safety meetings will be scheduled once a month.

CORPORATE SAFETY COMMITTEE RESPONSIBILITIES

Corporate Safety Committee members are responsible for:

- Compliance with meeting schedules.
- Follow-up corrective actions required for safety compliance.
- Establishing a monthly agenda.
- All loss control and risk management activities.
- Maintenance and updates of all safety policy procedures for Executive Committee review and approval.
- All regulatory compliance reviews.
- Scheduling and content of Annual Safety Training Meeting.

CORPORATE SAFETY COMMITTEE MEETING REPORTS

Corporate Safety Committee Meeting Reports will be utilized to:

- Identify problem areas and training needs.
- Improve the quality of field safety.
- Address specific jobsite safety needs.
- Review Executive Committee of compliance issues.
- Assess safety management needs and requirements.
- Recommending and assisting with employee safety training and education needs.
- Compliance with reporting requirements for all federal, state and local authorities.

VIOLATIONS

Violations of this policy will be subject to disciplinary action per Company Compliance Policies.

ANNUAL SAFETY TRAINING MEETING POLICY

In compliance with federal, state and Company safety requirements, Annual Safety Training Meetings are required. All field and safety personnel and Division Managers are to cooperate with and participate in the Annual Safety Training Meetings. To assure compliance, Annual Safety Training Meeting activities will be documented.

COMPANY RESPONSIBILITIES

All personnel education, training and materials required accomplishing the training process.

- All necessary forms for purposes of documentation of the safety meeting process.
- A training schedule agenda.
- Trained and certified hearing test professionals to perform employee testing.

EMPLOYEE RESPONSIBILITIES

- Safety Specialists and Division Managers are responsible for employee compliance with training schedules.
- Safety Specialists are responsible for all required meeting documentation including attendance lists.
- Safety Specialists and Division Managers are responsible for follow-up corrective actions required for compliance.
- Safety Specialists are responsible for employee management notification of training schedules and topics.
- Safety Specialists are responsible for preparation of safety meeting agenda and scheduling of training personnel and materials.
- All employees are responsible for attending and participating in the annual safety meeting.
- All employees are to report for hearing testing as scheduled.

MANDATORY TOPICS

Federal, state and local regulatory requirements mandate annual training in the area of:

- Drug and Alcohol Abuse
- MSHA / OSHA Safety Standards
- Hazardous Materials

These topics are always to be scheduled topics. Annual hearing tests are mandated and must always be scheduled.

ANNUAL SAFETY TRAINING MEETING REPORTS AND ATTENDANCE LISTS

- Annual Safety Training Meeting Reports will be utilized to:
- Assure compliance with federal, state and local regulatory training requirements.
- Document employee training for Company policies.
- Provide follow-up issues for managers.
- Document loss control and risk management issues for insurance purposes.

VIOLATIONS

Violations of this policy will be subject to disciplinary action per Company Compliance Policies.

GENERAL SAFETY INSPECTION POLICY

The Company's Safety Policies and General Work Rules are maintained and enforced through management commitment, employee dedication and training, regulatory requirements and general safety inspections. Various types of inspections are necessary to assure compliance with both Company policies and regulatory requirements. The Company has employed trained safety personnel to assist with training and enforcement of inspection activities.

The Company Inspection Policy includes:

- Guidelines and Procedures for Company designated inspections.
- Guidelines and Procedures for compliance with regulatory inspections.
- Employee responsibilities for inspection requirements.
- Requirement that inspection activities to be documented and reports prepared.
- Requirements for individual inspection performance.
- Appropriate checklists and other aids as required.

Company / regulatory inspections are listed below:

COMPANY	REGULATORY
Jobsite	MSHA
Equipment	OSHA
Vehicle	
Pre-Blast	

Each inspection process has specific requirements. To assure compliance with all requirements, individual procedures have been developed for each inspection process.

JOBSITE SAFETY OBSERVATION REPORTS

Jobsite Safety Observation Reports will be utilized to:

- Evaluate jobsite safety conditions.
- Identify problem areas and training needs.
- Improve the quality of field safety.
- Review non-compliance issues with employees, as required.
- Assess for Job of the Month requirements.
- Assess management and employee performance for job and annual review purposes.

VIOLATIONS

Violations of this policy will be subject to disciplinary action per Company Compliance Policies.

JOBSITE SAFETY INSPECTION POLICY

Jobsite work areas are to be maintained in a safe and orderly condition. Jobsite personnel are to cooperate with all efforts to effect a clean safe work environment.
To assure compliance, jobsite inspections will be conducted on a regular basis.

COMPANY RESPONSIBILITIES

The Company will provide for:

- Education and training of safety personnel to include inspection and regulatory requirements pertinent to the jobsite.
- All necessary forms for purposes of documentation of the inspection process.
- Training of Field Personnel in requirements of acceptable jobsite standards.

EMPLOYEE RESPONSIBILITIES

- Safety Specialists and Division Managers are responsible for conducting safety inspections.
- Safety Specialists and Division Managers are responsible for follow-up corrective actions required for safety compliance.
- Safety Specialists are responsible for preparation of jobsite safety observation reports.
- All employees are responsible for maintaining a clean, safe work area.
- All employees are to report unsafe conditions immediately to Safety Specialists for corrective action and follow-up.

OSHA INSPECTION POLICY

Jobsite work areas and functions are subject to OSHA regulations and inspections. There are penalties and fines for employers and employees if OSHA standards are not met. The Company and all employees will comply with OSHA standards and cooperate with inspectors.

COMPANY RESPONSIBILITIES

To assure employee understand of and Company compliance with OSHA regulations, the Company will:

- Provide education and training of all employees.
- Obtain information on changes in regulations.
- Require regular in-house safety inspections.

EMPLOYEE RESPONSIBILITIES

- Safety Specialists and Division Managers are responsible for the OSHA inspection process and for follow-up activities and required corrective action.
- Safety Specialists are responsible for keeping employees immediately advised of regulatory changes.
- Safety Specialists are responsible for documentation and reporting requirements.
- All employees are responsible for maintaining standards relating to compliance issues.
- All employees are required to report possible violation issues to Safety Specialists for immediate corrective action and follow-up.

INSPECTION PROCEDURES

The following procedures must be followed during an OSHA inspection:

- Be courteous and cooperative.
- Request identification.
- Determine the purpose and type of inspection.
- General Inspection
- Employee Complaint
- Industrial Hygiene / worksite hazard.
- Request the inspector to allow you to contact Safety Specialist.
  Immediately contact your Division Office. If the Safety Specialist is not available, identify your location, the purpose of the inspection and how, when and where you may be contacted.
- Answer all questions, as asked. DO NOT VOLUNTEER INFORMATION OR ARGUE WITH THE INSPECTOR.
- Take notes. Take pictures if possible. If you are not able to take pictures, note any pictures of the site or operations taken by the inspector.
- When the inspection is complete, write down everything the inspector tells you.
- Immediately report to the Safety Specialist the content and results of the inspection.

VIOLATIONS

Violations of this policy will be subject to disciplinary action per Company Compliance Policies.

MSHA INSPECTION POLICY

All quarries and some jobsites are subject to MSHA regulations and inspections. There are penalties and fines for employers and employees if MSHA standards are not met. The Company and all employees will comply with MSHA standards at these jobsites and cooperate with inspectors.

COMPANY RESPONSIBILITIES

To assure employee understand of and Company compliance with MSHA regulations, the Company will:

- Provide education and training of all employees.
- Obtain information on changes in regulations.
- Require regular in-house safety inspections.

EMPLOYEE RESPONSIBILITIES

- Safety Specialists and Division Managers are responsible for the MSHA inspection process and for follow-up activities and required corrective action.
- Safety Specialists are responsible for keeping employees immediately advised of regulatory changes.
- Safety Specialists are responsible for documentation and reporting requirements.
- All employees are responsible for maintaining standards relating to compliance issues.
- All employees are required to report possible violation issues to Safety Specialists for immediate corrective action and follow-up.

INSPECTION PROCEDURES

The following procedures must be followed during an MSHA inspection:

- Be courteous and cooperative.
- Request the inspector to allow you to contact Safety Specialist. Immediately contact your Division Office. If the Safety Specialist is not available, identify your location, the purpose of the inspection and how, when and where you may be contacted.
- Answer all questions, as asked. DO NOT VOLUNTEER INFORMATION OR ARGUE WITH THE INSPECTOR.
- Take notes. Take pictures if possible. If you are not able to take pictures, note any pictures of the site or operations taken by the inspector.
- When the inspection is complete, write down everything the inspector tells you.
- Immediately report to the Safety Specialist the content and results of the inspection.

VIOLATIONS

Violations of this policy will be subject to disciplinary action per Company Compliance Policies.

VEHICLE INSPECTION POLICY

Company vehicles are to be maintained in a legal, safe and efficient operating condition at all times. A cooperative effort by the Company and all personnel is required to maintain these standards.

COMPANY RESPONSIBILITIES

The Company will provide for:

- All licensing and regulatory inspection fees.
- Regular and emergency mechanical or safety repairs.
- Regular maintenance activities (oil changes, tune-ups, etc.)

EMPLOYEE RESPONSIBILITIES

- Employees will check vehicles at the beginning and end of each day for general working conditions (per Drivers' Inspection Report Form).
- Employees will check for valid state registrations and notify maintenance thirty days prior to expiration.
- Employees will check for valid state inspection stickers and obtain up-to-date inspections as required.
- Employees will immediately report any and all safety sensitive vehicle problems to maintenance and Safety Specialists for repairs and corrections.
- Employees are responsible for all required placarding of vehicles. **VEHICLES MUST DISPLAY ALL PLACARDS REQUIRED BY LAW.**
- Employees are to maintain current knowledge of regulations regarding operation and licensing of vehicles and transportation of hazardous materials.

VIOLATIONS

Violations of this policy will be subject to disciplinary action per Company Compliance policies.

EQUIPMENT INSPECTION POLICY

Company equipment is to be maintained in a legal, safe and efficient operating condition at all times. A cooperative effort by the Company and all personnel is required to maintain these standards.

COMPANY RESPONSIBILITIES

The Company will provide for:

- Regular and emergency mechanical or safety repairs.
- Regular maintenance activities (oil changes, tune-ups, etc.).
- Employee education and training in safety sensitive areas and regulatory requirement.

EMPLOYEE RESPONSIBILITIES

- Employees will check equipment at the beginning and end of each day for general conditions.
- Employees will immediately report any and all safety sensitive equipment problems to maintenance and Safety Specialists for repairs and corrections.
- Employees are to maintain current knowledge of regulations regarding operation of equipment.
- Employees are to operate all equipment in compliance with federal, state and local regulatory requirements.

VIOLATIONS

Violations of this policy will be subject to disciplinary action per Company Compliance Policies.

PRE-BLAST INSPECTION POLICY

The Company is committed to eliminating or reducing the possibility of personal injury or property damage. The Pre-blast Survey has been implemented as a means of providing for public documentation and controlled losses. The Pre-blast Survey may be required by contractual obligations, site locations or public / political concerns.

COMPANY RESPONSIBILITIES

The Company will provide for:

- Pre-blast education and training of Safety Personnel.
- All materials, forms, etc. required for public notice, information and pre-blast documentation.

EMPLOYEE RESPONSIBILITIES

- Division Managers are responsible for identifying requirements for Pre-blast Surveys.
- Safety Specialists are responsible for conducting and coordinating all Pre-blast activities and surveys.
- Safety Specialists and Division Managers are responsible for follow-up corrective actions required for public safety and approval.
- Safety Specialists are responsible for preparing and maintaining Pre-blast documentation.
- Safety Specialists are responsible for public relation activities – including responding to public inquiries and complaints.

PRE-BLAST SURVEY REPORTS

Pre-blast Survey Reports will be utilized to:

- Document any existing property damage conditions.
- Identify problem ideas.
- Provide information to insurance carriers, as required.
- Provide information to regulatory agencies or legal representatives as required.
- Assist with the Company's loss control program.

VIOLATIONS

Violations of this policy will be subject to disciplinary action per Company Compliance Policies.

MAGAZINE INVENTORY CONTROL & SAFETY POLICY

Federal, State and Local regulations are very specific regarding the storage, transport, handling and safety issues surrounding explosives materials.

The Company and **ALL EMPLOYEES** through contractual agreements, compliance issues and a commitment to public and private safety, are charged with the responsibility to maintain and secure the magazines. There are severe financial and legal penalties for non-compliance - - including fines up to $10,000 and imprisonment.

Procedures and policies apply to all magazines - - permanent and temporary.

REQUIRED POSTINGS:

The following items are to be posted in all magazines:

- A copy of the ATF permit executed with an original signature.
- A copy of the Inventory Control Procedures.
- "Magazine Rules for Explosives".
- "Caution – Explosives Must Be Handled Carefully".

COMPANY RESPONSIBILITIES

The Company will provide for:

- Education and training of personnel as required by regulation.
- All licenses and permits required.
- BATF Regulation Guidelines.
- All security lock systems and keys.
- Replacement of locks and keys as required. Minimally, on an annual basis.
- All record keeping materials and supplies required for magazine inventory maintenance.
- All leasing responsibility for magazine sites.
- All required insurance coverage.
- All Warning / Caution and Safety Rule Posting for magazines.

EMPLOYEE RESPONSIBILITIES

All Employees:

- Must adhere strictly to Magazine Safety Rules.
- Must report all inventory discrepancies immediately to Division Manager and Safety personnel.

Division Managers:

- Must assure that all personnel follow magazine procedures and safety requirements.
- Locate and negotiate for magazine sites.
- Attend to magazine site leasing requirements.
- All loss reports to BATF.

Personnel Assigned for Inventory Control:

- Collect and review all Trip Manifest forms.
- Reconcile Trip Manifest forms to the inventory control notebook and supplies on hand.
- Assure proper labeling and color-coding of all containers.
- Maintain Inventory File documents.

Safety Personnel:

- Quarterly inspections of all magazine for compliance checks.

Blasters:

- Keep magazine area clean and safe. Remove brush, trash, etc. within 25'.
- Clean magazine regularly.
- Repair, as able, any leaks. Request repairs if unable to correct.
- Report any leaks or unsafe conditions immediately to Division Manager and or Safety Personnel.
- Are solely responsible for all product / blasting supplies removed to stock a temporary magazine.
- Are required to follow inventory control procedures at all temporary sites.
- Use approval lighting only when removing supplies from the magazine.

PRODUCT STORAGE

These product storage rules apply to both permanent and remote sites.

- At time of delivery, products are to be stored as follows:
- Color-code all products by code date.
- Keep types and sizes together.
- Store cases flat, topside up, code date out. Stack to avoid possibility of collapse.
- Keep boxes closed.
- Store only explosive materials (no tools, tires, etc.).
- Store detonators separately.

PRODUCT USAGE

When removing product / blasting supplies for a job:
Remove the product – including caps and powder. Code dates are to be followed, the oldest product is to be used first.

When returning product / blasting supplies at the end of the day:
Unload the product / blasting supplies.
Return the product / blasting supplies to the proper magazine and lot utilizing code dates.

INVENTORY CONTROL PROCEDURES

All blasters must complete a Trip Manifest when removing product from a magazine. Trip Manifest forms are to be properly filled out listing all products removed. There will be no exceptions to this requirement ever.

MAGAZINE SAFETY RULES

- No smoking, matches, flames or spark producing devices within 50' of the magazine.
- No firearms within 50' of the magazine.
- No repacking of explosives within 50' of the magazine.
- No hunting or shooting on the magazine site.
- Do not throw or drop explosives.
- Do not block ventilation areas. Proper ventilation must be maintained.
- Post a copy of the "Magazine Rules for Explosives" and "Caution --- Explosives Must be Handled Carefully" at all magazines.

SECURITY RULES

- Division Managers, Safety Personnel, Inventory Control personnel and Blasters are the only personnel authorized to enter magazines.

- Division Managers, Safety Personnel, Inventory Control personnel and Blasters are the only personnel authorized to receive delivery of or remove stock from a magazine.

- All Company magazines must be equipped with a security lock.
- Access to magazines is limited to authorize personnel only.
- Magazine keys will be issued / assigned to authorized personnel only.
- Keys must never be given / or transferred to unauthorized personnel for any reason.
- Doors and gates to magazines are to be locked at all times.
- Theft or missing items are to be reported immediately to Safety Personnel and Division Managers.

ALWAYS, ALWAYS FOLLOW THESE RULES!!!!!

VIOLATIONS

Violations of Magazine Policy are considered to be of a serious and life threatening nature. Disciplinary action for violations will be considered as described in the Company's Compliance Policies.

NEW EMPLOYEE ORIENTATION

The serious nature of our business demands that every employee be thoroughly aware of his or her job responsibilities and their relationship to the overall aim of the Company.

One of the most important aspects of his or her functions while an employee of Maine Drilling & Blasting, Inc. is that of **SAFETY**.

To insure that end, each Division shall see that every new employee is provided a thorough orientation. The Division Safety Personnel will conduct a complete review of Company Safety Policies and all regulatory requirements.

Such orientation shall include training and review of the following items:

- Corporate Personnel Policies
- Corporate Safety Manual
- Hazardous Material Manual
- All appropriate Federal, State and local codes, books or manuals.
- Use of personal protective equipment.
- Use of Company owned equipment, as appropriate.

All new employees are to be given the opportunity to ask any Company Policy related question.

All new employees are to be informed that the use of all safety-training aids that are, or may become available is fully authorized upon request.

This orientation must take place within the new employee's first (1st) week of employment.

GENERAL WORK RULES

Work Periods

Workdays and hours will be established by Division and Corporate Management and may be adjusted to job requirements. Repeated absences will not be tolerated and will subject the employee to disciplinary action.

Controlled Substances

- Alcoholic beverages or drugs / controlled substances are not permitted at any time on Company property, vehicles, equipment or work sites. All employees are to comply with the Company's drug and alcohol policies as applicable.

- All prescription drugs must be in prescription containers. Employees must advise supervisors if prescribed medications cause drowsiness. Employees will not operate Company vehicles or equipment or handle explosives while under the influence of such prescription drugs.

Safety Equipment

- All employees are subject to the Company's Safety Equipment Policy and will comply with required use, as outlined, of all personal protective equipment. Personal protective equipment consists of head, eye, foot, hand, back, hearing and respiratory protective devices as well as safety lines, belts and etc. Employees are responsible for the care and maintenance of all personal protective equipment issued to them.

  Employees must have required safety equipment ready for use and available when reporting to work on a daily basis.

Job Site "Clean-Sweep"

Employees are responsible for all job site safety issues including maintaining a clean, controlled weak area. All debris is to be cleared from work areas immediately. Company Policy requires clean, safe work site areas.

Fire Protection Devices

- All fire protection devices (fire extinguishers, etc.) are to be checked daily to assure that they are functional.
- Fire extinguishers must be available during all welding cutting operations.
- All employees are to be familiar with emergency fire prevention and control procedures.
- All Company trucks are to be equipped with functional fire extinguishers, which will be supplied by the Company.

Explosives

- All employees must have knowledge of proper handling of explosives.
- All employees are to be familiar with code, standards, regulations and procedures as defined by law.

To assure employee compliance, each office will have copies of:

- Federal Motor Carrier Safety Regulations Pocketbook.
- NFPA #495 Code for the Manufacturer, Transportation and Use of Explosive Material.
- Copies of State Regulations.
- Maine Drilling & Blasting's "Red Book" for Drivers.
- OSHA Regulations.
- MSHA Regulations.
- Emergency Response Guidebook

Employees are responsible for regular review of rules and regulations and must stay current with changes in laws, codes, etc.

Changes in Laws and Codes

Safety Specialists will notify and advise employees of significant changes in codes and laws as required.

Record Keeping

It is the responsibility of every employee that will come into contact with explosives to know, understand, and comply with the following:

- Records: Maintain up-to-date records of all activities, especially the blasting logs, as they are considered legal records. They must be turned into the office weekly.
- Magazines: Maintenance of the magazines is everyone's responsibility. Strict adherence to the rules of construction, separation, distance between units and inventory control is mandatory (Per Section of this manual.)
- Licensing: Renew and maintain current valid licenses, obey the conditions of blasters and drivers licenses, obtain permits, keep logs, keep your physical exams up-to-date, etc.
- Unlawful Acts: Knowledge of the laws, avoidance of false entries, proper storage, reporting thefts or losses are all additional responsibilities of all employees.

Disciplinary Action

Violation of any of the above could result in disciplinary action per Company Compliance Policy.

COMPANY NON - COMPLIANCE POLICY

POLICY

It is essential that the Company be successful – that satisfactory standards of performance are maintained in all aspects of the Company's operation.

The notice of non-compliance procedure has been developed to insure proper standards are effectively communicated, understood, and diligently supported by employees of Maine Drilling & Blasting.

PROCEDURE

Employees will be issued a notice of Non-compliance for violations of Company Safety Policies or general work rules.

The following steps are to be followed when issuing a Notice of Non-compliance:

- The Supervisor / Safety Specialist will immediately upon discovery personally review the violation with the employee.
- A Notice of Non-compliance will be completed by the Supervisor / Safety Specialist.
- Corrective actions will be reviewed with the employee.
- Employee will be given a copy of the Notice of Non-compliance and may not any comments for the personnel file.
- The original Notice of Non-compliance is to be placed in the employee's personnel file and a copy provided to the Division Manager, employee and Safety Specialist.

ISSUANCE

A notice of Non-compliance may be issued by:

- Executive Committee
- Corporate Administrators
- Division Managers
- Safety Personnel
- Foreman / Supervisors

CORRECTIVE ACTION

FIRST NOTICE: Personal review
Permanent record to personnel file

SECOND NOTICE: Personal review
Permanent record to personnel file
Off-duty review of violated policy – one hour's time
Written statement to manager that employee understands the rule(s) and will adhere to them (copy to personnel file).

THIRD NOTICE: Personal review
Permanent record to personnel file
Disciplinary action required
Loss of one-day pay
Loss of job extras (truck day, overnight)
Fine $10 Minor
$25 Serious

FOURTH NOTICE: Termination subject to review by Executive Committee upon request by employee.

SERIOUS OR LIFE THREATENING INFRACTIONS:

Not subject to the above notice process.
Any infraction of Company rules, which results in a life-threatening situation or is deemed serious in nature, can be cause for immediate termination action by the Executive Committee.

EXECUTIVE COMMITTEE REVIEW:

An employee subject to termination for non-compliance may request a review of the termination by the Executive Committee. Upon receipt of a request for review, the Executive Committee will:

Review all circumstances leading to termination.
Review employee's service in general.
Consider any extenuating circumstances leading to the termination.

After review of all circumstances, the Executive Committee may:

Uphold the termination.
Re-instate the employee.

REINSTATED EMPLOYEES:

Reinstated employees will be considered in a probationary status for 6 months. Any violations of policy during the probationary period will result in immediate termination without review.
Upon satisfactory completion of probationary period, employee will be subject to regular and usual non-compliance actions.

Maine Drilling
& Blasting, Inc.

Phone: 207-582-2338
FAX: 207-582-8794

Memorandum

To:All Employees
From: Lucinda L. Long, Employee Services Mgr.
Date: January 15, 2001
Subject: Compliance with Company Policies Effective 01-29-01
Revision of the April, 1999 Policy

The Company Compliance Policy was originally issued to all employees in April 1999 to outline a few of the most common policy and procedure violations. This re-issuance of the original policy will reflect a change in both the number of allowable violations and the types of categories. These changes are being implemented to help all of us increase our focus on safety and general work guidelines that affect each of us in our daily activities.

Below is a list of infractions that frequently result in Non-Compliance Notices being issued:

1. Safety
2. Violation of Federal Safety Requirements – OSHA, MSHA, BATF, Positive Random Drug Screen
3. Magazine rules and regulations
4. Incident/Injury reporting
5. Vehicular accident reporting
6. Submission of job costing information (i.e. Time Cards, Drillers' and Blasters' reports, etc.)
7. Submission of paperwork (i.e. Gas Receipts, Field purchases, etc.)
8. Damage/Misuse of Company property
9. Failure of employee to return Company property
10. Poor Work Performance (including Non-productive hours)
11. Absenteeism and Tardiness

Maine Drilling & Blasting, Inc. (known as the Company) implemented a Non-compliance program commencing on April 1, 1999. There is **no** change in our existing policies, just the method of enforcement.

This program will run on a calendar year basis commencing on January 1st of each year and ending on or about December 15th. Each employee who violates existing policies will be issued a written violation, which will become a permanent part of your personnel record. The first written violation an employee receives will be the first and only "free pass" they will receive in that calendar year. All written violations received after that will reduce the amount of an employee's bonus/profit sharing by the guidelines listed below. If an employee receives (5) written violations (except in cases of violations of Federal regulations and Positive Random Drug Tests) in Section 1, that employee will be placed on probation for a period of not less than (90) ninety days or terminated. An employee receiving (1) one or more written violations during their probationary period will result in further disciplinary actions, to include, but not limited to, termination of their employment with the Company. This is our established policy and it is our intent to fully enforce it. Not withstanding continued non-compliance with Company policies and procedures is grounds for dismissal regardless of the number of violations an employee has received during any specified period.

Each infraction of our established policies and procedures is weighted based on the severity of the infraction. Safety, magazine, and company equipment violations will have a greater fine associated with the employee's non-compliance. However,

disciplinary action in addition to a reduction of bonus/profit sharing for certain infractions will occur. A good example of this would be any serious violation of existing Company policies and procedures, which are grounds for immediate dismissal. The written violation will be issued to the **employee** who was not in compliance with company policies and the **Job Foreman** on the location where the violation occurred. It is imperative that each job foremen take full responsibility for what occurs on their job site. This enforcement policy **does not** take the place of our existing disciplinary actions.

The Field Employee Safety Booklet and Magazine Rules and Regulations are the source documents from which our policies and procedures are established. All employees should refer to these documents so that they become familiar with their contents.

The noncompliance fine guideline beginning in calendar year 2001 and continuing is listed below:

Section 1 — **Safety, Magazine, Administrative Issues, Poor Work Performance, Absenteeism and Tardiness & Company Equipment**

1st Violation	Warning only, no monetary loss.
2nd Violation	15% reduction of bonus/profit sharing
3rd Violation	30% reduction of bonus/profit sharing
4th Violation	60% reduction of bonus/profit sharing
5th Violation	No Annual Bonus/Profit Sharing Issued and the Employee will either be on Probationary Status or Terminated

Section 2 — **Safety – Violation of Federal Requirements (OSHA, MSHA, BATF (Including Magazines), DOT, Positive Random Drug Screen, etc.**

1st Violation	Non-Compliance in Employee's Personnel File (For Positive Random Drug Screen Violation – In all cases, the Employee must follow the procedure outlined in the Company Policy)
2nd Violation	50% reduction of bonus/profit sharing
3rd Violation	Loss of Bonus/profit sharing issued
4th Violation	Termination of Employment

** If an employee receives a violation in Section 2 they will not be eligible for a Warning in Section 1 - The employee will automatically progress to the 2nd Violation.

Any violations in Section 2, could result in termination of employment if deemed appropriate by management.

The policy changes become effective January 29, 2001. If any employee has any questions pertaining to this policy, please contact your Divisional Manager, immediate Supervisor, or myself.

MOTOR VEHICLE SAFETY POLICY

Maine Drilling & Blasting, Inc. recognizes its responsibility to conduct business operations in a manner safeguarding the general public and employees from personal injury and property damage. This responsibility is shared by all employees who have access to Company vehicles.

Maine Drilling & Blasting will furnish a Company vehicle to employees attaining prescribed levels of skill. This practice enables the Company to effectively service customers and recognizes the employee's contribution to the Company.

COMPANY RESPONSIBILITIES

The Company will provide for:
All education and training needs required by regulations.
All taxes and maintenance costs.
All gas and oil.
All registration, inspection and license fees.
All required insurance.
All required placarding materials.

EMPLOYEE RESPONSIBILITIES

Employees are responsible for:
Wearing Seat Belts at all times
Keeping vehicles neat and clean.
Current licensing requirements.
Maintaining safe driving records.
Complying with Company safety standards.
Complying with all motor vehicle laws.
Complying with vehicle assignment policies.
Daily vehicle inspection to assure all safety regulation compliance.
Checking for valid license/registration daily.
All CDL drivers are subject to alcohol/drug testing per DOT regulations.

SAFETY SPECIALISTS RESPONSIBILITIES

Reviewing employee's driving records on a semi-annual and per incident basis.
Providing the Division Manager with reports on employee driving status.
Reviewing DOT violations on a per incident basis.

DRIVER RECORD/ACCIDENT REPORTS

Copies of all reports will be come part of the employees personnel file and will be utilized to:

Determine regulatory compliance issues are met.
Assess employee performance for annual review process.
Identify problem areas – training needs.

VIOLATIONS

Violation of any of the above could result in disciplinary action per Company Compliance Policy.

VEHICLE ASSIGNMENT POLICY

Company vehicle use is determined by individual employee's position and the amount of travel required.

An employee may be assigned a vehicle on a full-time or part-time basis.

An employee assigned a Company vehicle must operate the vehicle in a safe and responsible manner in compliance with all laws and regulatory requirements.

An employee may use an assigned Company vehicle to commute to jobsite locations from his residence and to return to his residence from the jobsite.

An assigned Company vehicle is not to be used for any personal use. Unauthorized use of a Company vehicle will constitute a loss of commuting privileges.

An employee operating a Company vehicle while under the influence of, or in the possession of drugs, alcohol or other controlled substances ON COMPANY TIME, will be immediately terminated.

An employee operating a Company vehicle while under the influence of, or in the possession of drugs, alcohol or other controlled substances ON PERSONAL TIME will:

Be suspended without pay for two weeks.
Lose operating privileges for 3 months.
Lose commuting privileges for 9 months.

VEHICLE SAFETY VIOLATIONS

Individual states break down violations into minor and serious categories. Maine Drilling & Blasting, in conjunction with its insurance carrier, has standardized traffic violations as:

MINOR

Illegal plates / inspection stickers
Traffic Control Device Violation
License Restriction Violation
Failure to Drive on Right
Failure to stop at Weight Station
Stop Sign Violation
Failure to Signal Turns
Yield Sign Violation
Improper Passing
Failure to use seat belts

SERIOUS

Failure to stop for Police Officer
Failure to Report an Accident
Passing a stopped School Bus
Leaving Scene of Accident
Failure to use Due Care
Operating after Suspension
Operating without a license
Loaning Altering License
Reckless Driving
Passing a Roadblock
Eluding and Officer
Racing
Any minor violation associated with an accident.

VIOLATION / RESTRICTION PERIOD

Operating a vehicle under the influence of alcohol or other drugs.

Three-month loss of operating privilege. Nine-month loss of commuting privilege. Possible termination.

Three speeding convictions in any one-year. (Less than 20 MPH over posted speed.

Loss of operating privilege – duration. Four-month loss of commuting privilege.

One speeding conviction (more than 20 MPH over posted speed).

Two-month loss of operating privilege.

Four speeding convictions in any two years (20 MPH or less.

Loss of operating privilege – duration. Four-month loss of commuting privilege.

Using a Company vehicle without the knowledge and authorization of supervisor.

Six-month loss of commuting privilege.

Any one serious infraction (see serious infractions).

Three-month loss of operating privilege. Nine-month loss of commuting privilege.

Any two minor infractions in one calendar year.

Three-month loss of commuting privilege.

Any two DOT convictions in one year (i.e. route slips, trip manifests, placards, etc.)

Minimum one week off without pay.

SEAT BELT POLICY

The U. S. Department of Labor, through MSHA, requires all vehicles under the jurisdiction of the Mine Safety and Health Administration to be equipped with seat belts. Seat belt use is mandatory for all operators.

All employees are considered by Company policy to be under the jurisdiction of MSHA. Therefore, **ALL** drivers of Company vehicles are **REQUIRED** to use seat belts at all times.

As a further note, the regulation (30CFR 56/57.1400) mandates penalties for:

-"Failure to provide seat belts as required by the regulations."
-"Failure to maintain seat belts in a useable condition."

Failure to use seat belts is a violation of Company safety policy and will subject employees to disciplinary action as outlined.

EQUIPMENT SAFETY POLICY

The Company recognizes its responsibility to conduct business operations in a manner safeguarding the general public and employees from personal injury and property damage. All employees who have access to Company equipment share this responsibility.

Only employees attaining the required levels of skill and training will operate Company equipment.

COMPANY RESPONSIBILITY

The Company will provide for:

-Education and training of operators as required by regulation.
-Training of operators as required on new equipment or operation techniques.
-All emergency maintenance and repair of equipment.
-Regular maintenance and safety checks of equipment.
-All required insurance coverage.
-All materials required for daily safe operations and Lockout/Tag out procedures.

EMPLOYEE RESPONSIBILITIES

Operators are responsible for:

-Keeping equipment neat and clean.
-Maintaining appropriate, current operators licensing.
-Complying with Company and regulatory safety operation standards.
-Inspecting equipment to assure safety compliance daily.
-Following Lockout/Tag out procedures.

SAFETY SPECIALIST RESPONSIBILITIES

-Reviewing employee's operation techniques.
-Reporting to Division Managers any operations, which demonstrate non-compliance to Company policies or regulatory requirements.

VIOLATIONS

Violations of any of the above could result in disciplinary action per Company Compliance Policy.

SEISMOGRAPH POLICY

The Company recognizes its responsibility to conduct business operations in a manner safeguarding the general public and employees from personal injury and property damage. All employees who have access to and operate seismographs share this responsibility.

Only employees attaining required levels of skill and training would operate Company seismographs.

COMPANY RESPONSIBILITIES

The Company will provide for:

-Education and training of operators as required by regulation.
-Training of operators as required on new seismograph or operating techniques.
-All emergency maintenance and repair of seismograph equipment.
-Regular maintenance and safety checks of seismograph equipment.
-All materials required for daily safe operations and documentation procedures.

EMPLOYEE RESPONSIBILITIES

Seismograph Operators are responsible for:

-Keeping seismograph equipment in secure storage.
-Proper operation and setting of seismographs at the jobsite.
-Complying with Company and regulatory safety operation standards.
-Inspecting equipment to assure seismographs are operating properly.
-Notifying Safety Specialists and Maintenance Personnel of repair requirements.
-Checking and reading results for shot performance and adjusting work patterns as required.

SAFETY SPECIALISTS RESPONSIBILITY:

Safety Specialists are responsible for:

-Reviewing employee operation techniques.
-Reporting to Division Managers any operations, which demonstrate non-compliance to Company policies or regulatory requirements.
-Supplying seismographic information to legal parties and insurance carriers for claim resolution.

VIOLATIONS

Violation of any of the above could result in disciplinary action per Company Non-Compliance Policy.

LOCKOUT / TAG OUT POLICY

The Company recognizes its responsibility to conduct business operations in a manner safeguarding the general public and employees from personal injury and property damage. All employees who have access to and responsibility for all types of Company heavy equipment share this responsibility.

Company heavy employees attaining will operate equipment-required levels of skill and training.

COMPANY RESPONSIBILITIES

The Company will provide for:

-Education and training of operators as required by regulation.
-Training of operators as required on new equipment or operation techniques.
-All emergency maintenance and repair of equipment.
-Regular maintenance and safety checks of equipment.
-All required insurance coverage.
-All materials required for daily Lockout/Tag out procedures.

EMPLOYEE RESPONSIBILITIES

Operators/mechanics are responsible for:

-Keeping equipment clean and safe.
-Complying with Company and regulatory Lockout/Tag out procedures.
-Notifying Maintenance Supervisor or Safety Specialist if a Lockout Tag has not been removed and the Tag out Employee is not available.

Maintenance Supervisors are responsible for:

-Completing an inspection of any Locked out equipment when the Tag out employee is not available.
-Approving or denying removal of Lockout tags based upon such inspection.

PROCEDURES:

When an operator or mechanic is involved with the servicing of equipment, the following procedure is required.

Remove the ignition key and attach a Lockout Tag showing the employees name and date. If two employees are working on the same equipment, each employee must attach a Lockout Tag.
Install a block under any moving part. Leave the block in place until the service operation is complete.
Bleed off all trapped compressed air or hydraulic fluids.
Service equipment as required.
Remove tags when service operation is complete.
NEVER remove another employee's Lockout Tag.
NEVER resume equipment operation until all Lockout Tags have not been removed.

VIOLATIONS

Violation of any of the above could result in disciplinary action per Company Compliance Policy.

DRUG/CONTROLLED SUBSTANCE POLICY

GENERAL POLICY:

Maine Drilling & Blasting, Inc., numerous regulatory authorities and the general public are concerned that all persons perform their duties in a workmanlike and professional manner, unimpaired by the effects of drug abuse. While no Company Policy will eliminate the possibility of drug abuse completely, it is believed that the program described in this policy will greatly reduce the risks associated with drug abuse to our employees and to the public.

The safety and well being of the public and our employees requires that all of our employees perform their duties free of the effects of drugs. A drug free workplace is especially important because of our responsibility to serve the public safety without interruption. An employee who uses drugs represents a hazard to himself and the public.

In order to ensure a safe, efficient and drug free workplace and to comply with Federal requirements, the following policy has been adopted and will apply to all individuals hereafter applying for positions as drivers as well as to all current Company drivers.

THE FOLLOWING REQUIREMENTS WILL CONSTITUTE THE DRUG/CONTROLLED SUBSTANCE POLICY.

USE PROHIBITED:

No employee / driver shall use any Schedule 1 drug included in the Schedule of Controlled Substances of the Drug Enforcement Agency or any narcotic of habit-forming drug except as permitted by Federal Motor Carrier Safety Regulations. An employee / driver may use a drug or controlled substance if it has been prescribed or administered by a physician and if the physician has advised the employee / driver that the drug or substance will not effect the drivers ability to safely operate a motor vehicle or equipment only after documentation from physician is received by the employees supervisor.

IMPAIRMENT PROHIBITED:

No employee / driver will report for duty or will drive while impaired by the use of any drug or controlled substance.

POSSESSION PROHIBITED:

No employee / driver at any site will possess any quantity of any drug or controlled substance, lawful or unlawful, which in sufficient quantity could result in impaired performance, with the exception of substances prescribed by a licensed physician.

SALE OR TRANSFER PROHIBITED:

No driver shall sell or transfer, or attempt to sell or transfer, to any other person any drug or controlled substance at any work site.

DRUG AND CONTROLLED SUBSTANCE SCREENING:

All applicants for employment by the Company as a driver will be subject to drug and controlled substance screening during the pre-employment physical examination. Refusal of the applicant to submit to such screening will cause the applicant to be found not medically qualified for employment and the applicant will not be hired.

All employees with a Commercial Driver's License are subject to drug and controlled substance screening as follows:

Reasonable Cause Screening: When there is reasonable cause to believe that a driver has reported to work or is working impaired as a result of the use of drugs or controlled substances, the driver may be required to submit to screening.

Random Screening: All drivers will be subject to unannounced drug and controlled substance screening t any time on a random basis as a condition of their continued employment as drivers.

Post-Accident Screening: Any driver who is involved in a reportable accident as described by the U.S. Department of Transportation must submit to drug and controlled substance screening as soon as possible following the accident and in not later than 32 hours after the accident.

Return to Duty Screening: If an employee receives a "positive" result to a drug and or alcohol screening, the employee must meet the DOT guidelines for a return to work status. All employees in this category must test "negative" before returning to work.

POSITIVE SCREENING RESULTS:

Any employee whose screening results in a positive test will be immediately interviewed the Medical Review Officer to determine the cause and/or an explanation of the positive test result. If it is determined that the positive result is due to illicit use of drugs or a controlled substance, the employee will be suspended from safety sensitive duties until a negative test result is obtained and the employee has been evaluated by a substance abuse professional and complied with a recommended rehabilitation plan.

Screening results will be utilized as follows:

- The screening of all urine samples submitted in accordance with this policy will be performed by qualified and certified testing laboratories.

- The test results will be reviewed to determine if there is evidence of the use of drugs or controlled substances.

POSITIVE SCREENING RESULTS CONT.

- The test results will be treated with strict confidence.

- The Company's Corporate Administrative Officer will be the sole custodial of the individual test results.

- The Company's Corporate Administrative Officer will advise the Company only whether the test results were positive (indicative of the presence of drugs or controlled substances) or negative.

- No test results will be released to any other party without the written authorization of the driver who was screened.

- The test results will be used to determine whether a driver is medically qualified to drive.

- Any employee with a positive screening result will be required to participate in the Employee Assistance Drug Rehabilitation Program.

RETURN TO DUTY:

An employee may return to full duty upon completion of required rehabilitation and negative test results have been obtained.

FOLLOW-UP TESTING:

Any driver who has had a Positive Screening will be subject to random checks for a period of time not to exceed twelve months or six (6) random checks. When a random check is requested the employee will immediately submit to a screening test.

EMPLOYEE REFUSAL:

Any refusal to submit to random reasonable cause, post-accident, or post-positive screening is a violation of Company policy and Federal Motor Carrier Safety Regulations and will result in the driver being not qualified to drive until screening has been completed and a negative result obtained.

Refusal to submit to screening following a fatal accident will result in suspension of all driving privileges for one year from the date of negative screening.

EMPLOYEE ASSISTANCE DRUG REHABILITATION PROGRAM:

An employee with a positive screening result will be referred to a drug rehabilitation program designed to help drivers overcome the problems resulting from the abuse of drugs or controlled substances. This program is to include counseling and education concerning the effects of the use of drugs and controlled substances on personal health and safety, and safety of others in the work environment.

SUPERVISOR TRAINING:

Supervisors of drivers must attend two hours of training on drug misuse symptoms and indicators used in making determinations for reasonable suspicion testing.

VIOLATIONS:

Violations of this policy will be subject to disciplinary action per Company Non-Compliance Policies.

THE FOLLOWING REQUIREMENTS WILL CONSTITUTE THE
ALCOHOL CONTROL POLICY:

USE PROHIBITED:

No employee/driver will report for duty or will drive while impaired by the use of any alcohol or alcohol based substance.

EMPLOYEE ASSISTANCE ALCOHOL REHABILITATION PROGRAM:

An employee with a positive screening greater than 0.04 or recurring positive tests result will be referred to a rehabilitation program designed to help drivers overcome the problems resulting from the abuse of alcohol or alcohol based substance. This program is to include counseling and education concerning the effects of the use of alcohol or alcohol based substances on personal health and safety, and the safety of others in the work environment.

SUPERVISOR TRAINING:

Supervisors of drivers must attend one hour of training on alcohol misuse symptoms and indicators used in making determinations for reasonable suspicion testing.

VIOLATIONS:

Violations of this policy will be subject to disciplinary action per Company Non-Compliance Policies.

POSSESSION PROHIBITED:

No employee/driver at any work site will possess any quantity of any alcohol or alcohol based substance.

SALE OR TRANSFER PROHIBITED:

No employee/driver shall sell or transfer, or attempt to sell or transfer, to any other person any alcohol or alcohol based substance at any work site.

ALCOHOL SCREENING:

All applicants for employment by the Company as a driver will be subject to alcohol screening during the pre-employment physical examination. Refusal of the applicant to submit to such screening will cause the applicant to be found not medically qualified for employment and the applicant will not be hired.

All Company drivers are subject to alcohol substance screenings as follows:

Reasonable Cause Screening: When there is reasonable cause to believe that a driver has reported to work or is working impaired as a result of the use of alcohol or alcohol based substance; the driver will be required to submit to screening. If screening cannot be administered, the employee must be suspended from duty for 24 hours.

Random Screening: All drivers will be subject to unannounced alcohol and alcohol based substance screening at any time on a random basis as a condition of their continued employment as drivers.

Post-Accident Screening: Any driver who is involved in a reportable accident as described by the U.S. Department of Transportation must submit to alcohol substance screening within two hours following the accident. If testing cannot occur within two hours, the driver must continue to seek a testing for an additional six hours. If testing cannot be obtained within eight hours of a reportable accident, the driver must provide written documentation of all information and attempts to coordinate the testing.

POSITIVE SCREENING RESULTS:

A reading of 0.02 or higher is considered by law a positive screening. Employees with a screening result of 0.02 but less than 0.04 must be removed from duty for a period of 24 hours. Employees with a screening result of 0.04 or greater or refusal to test must be removed from duty for a period of 24 hours and will be required to participate in an alcohol rehabilitation program.

Any driver who has a positive screening result will be subject to rescreening before returning to a safety sensitive position and subsequent random rescreening for a period not to exceed twelve months and/or six rescreens. Subsequent negative test results are subject to executive review of the President.

Screening results will be utilized as follows:

- The screening of all urine samples submitted in accordance with this policy will be preformed by qualified and certified testing laboratories.
- The test results will be reviewed to determine if there is evidence of the use of drugs or controlled substances.
- The test results will be treated with strict confidence.
- The Company's Corporate Administrative Officer will be the sole custodial of the individual test results.
- The Company's Corporate Administrative Officer will advise the Company only whether the test results were positive (indicative of the presence of drugs or controlled substances) or negative.

- No test results will be released to any other party without the written authorization of the driver who was screened.

- The test result will be used to determine whether a driver is medically qualified to drive.

- Any employee with a positive screening result will be required to participate in the Employee Assistance Drug Rehabilitation Program.

- A violation of employee based testing rules is not placed on nor does it affect the drivers' CDL.

EMPLOYEE REFUSAL:

Any refusal to submit to random reasonable cause, post-accident, or post-positive screening is a violation of Company policy and Federal Motor Carrier Safety Regulations and will result in the driver being not qualified to drive until screening has been completed and a negative result obtained.

Refusal to submit to screening following a fatal accident will result in suspension of all driving privileges for one year from the date of negative screening.

PERSONAL PROTECTIVE EQUIPMENT
GENERAL POLICY

The Company is committed to the protection, safety and health of its employees. In keeping with this commitment, the Company provides its employees with numerous protective safety equipment devices.

All employees are required to comply with the Company's Safety Equipment Policy, which outlines use, maintenance and responsibility for safety equipment. The requirements for use of specific safety devices are described in the individual equipment policy statement.

The following requirements will constitute the policy for personal protective equipment.

PERSONAL PROTECTIVE EQUIPMENT:

Personal protective equipment will include:

Hard Hats	Lanyard
Eye Protection	Hearing Protection
Safety Rope	Safety Harness
Back Braces	Vibration Gloves
Respiratory Protection	
Reflective Vest	

COMPANY RESPONSIBILITIES:

The Company will:

- Supply personal protective equipment to all employees in accordance with Company, federal, state and local regulatory safety requirements.

- Replace personal protective equipment no longer serviceable or up to standard.

All personal protective equipment requiring replacement must be returned to the Supply manager.

- Provide for employee education and training in the proper usage and maintenance of personal protective equipment.

- Provide any specialty physician prescribed devices required as the result of a work related injury.

EMPLOYEE RESPONSIBILITIES:

Employees are responsible for all personal protective equipment issued to them and must:

- Comply with all Company safety and equipment use policies as stated.
- Maintain all personal protective equipment in safe, serviceable condition.
- Request replacement of worn or unsafe equipment.
- Replace all misused or lost equipment.
- Not report for duty without required personal protective equipment or proper worksite clothing.
- Obtain and utilize any safety devices prescribed for all non-work related injury.

STEEL-TOED FOOT PROTECTION:

Employees must wear steel-toed foot protection at all times while on a job site with at least a six inch upper to provide ankle support.

Employees are responsible for all costs related to obtaining appropriate foot protection.

VIOLATIONS:

Violation of any of the above could result in disciplinary action per Company Non-Compliance Policy.

HAND AND FOOT PROTECTION POLICY

The Company is committed to the protection, safety and health of its employees. In keeping with this commitment, the Company provides its employees with numerous protective safety equipment devices.

All employees are required to comply with the Company's Safety Equipment Policy, which outlines use, maintenance and responsibility for safety equipment. The requirements for use of specific safety devices are described in the individual equipment policy statement.

The following requirements will constitute the policy for Hand Foot Protection.

ALL EMPLOYEES:

All employees are required to:

- Obtain steel-toed footwear.
- Wear steel-toed footwear at all times while on a jobsite
- Wear gloves to protect from cold, cuts, scratches, and heat.
- Wear gloves when moving/removing debris from a jobsite.
- Wear appropriate protective gloves when moving or handling chemical substances, working in contaminated areas or rendering first aid to injured employees with open, bleeding wounds.
- Use vibration gloves when required.

VIOLATIONS:

Violation of this policy will be subject to disciplinary action per Company Compliance Policies.

HEARING PROTECTION POLICY

The Company is committed to the protection, safety and health of its employees. In keeping with this commitment, the Company provides its employees with numerous protective safety equipment devices.

All employees are required to comply with the Company's Safety Equipment Policy, which outlines use, maintenance and responsibility for safety equipment. The requirements for use of specific safety devices are described in the individual equipment policy statement.

The following requirements will constitute the policy for Hearing Protection:

NO EMPLOYEE WILL BE ALLOWED TO WORK WITHOUT PROPER HEARING PROTECTION.

ALL EMPLOYEES:

- Subject to OSHA regulations will have a base line audiogram.
- Subject to OSHA regulations will have follow-up audiograms on an annual basis.
- Who after testing demonstrates a decrease in hearing levels/ability will be required to wear such protective devices as recommended by testing agents

- Will Wear Double Hearing Protection (Plugs & Muffs) when engaged in drilling a trench in the vicinity of a highway. THIS USE IS MANDATORY –

  NO EXCEPTIONS ARE TO BE MADE.

- Will be trained in the proper use, fitting and care of hearing protection devices, including muffs and earplugs.

VIOLATIONS:

Violation of this policy will be subject to disciplinary action per Company Compliance Policies.

ANTI-VIBRATION GLOVES POLICY

The Company is committed to the protection, safety and health of its employees. In keeping with this commitment, the Company provides its employees with numerous protective safety equipment devices.

All employees are required to comply with the Company's Safety Equipment Policy which outlines use, maintenance and responsibility for safety equipment. The requirements for use of specific safety devices are described in the individual equipment policy statement.

The following requirements will constitute the policy for Anti-Vibration Gloves:

ALL EMPLOYEES are required to use anti-vibration gloves at all times during jackhammer operations.

Anti-Vibration gloves will be issued to employees when a jackhammer is assigned.

Anti-Vibration gloves are to be returned with the jackhammer.

Employees will not be issued/or assigned anti-vibration gloves on a permanent basis.

Employees are responsible for safety equipment use and compliance and are to obtain anti-vibration gloves when assigned to jackhammer duty.

Violations of this policy will be subject to disciplinary action per Company Compliance Policies.

HEAD AND EYE PROTECTION POLICY

The Company is committed to the protection, safety and health of its employees. In keeping with this commitment, the Company provides its employees with numerous protective safety equipment devices.

All employees are required to comply with the Company's Safety Equipment Policy, which outlines use, maintenance and responsibility for safety equipment. The requirements for use of specific safety devices are described in the individual equipment policy statement.

The following requirements will constitute the policy for Head and Eye Protection.

ALL EMPLOYEES:

All employees are required to wear:

Hardhat at all times while on the jobsite.

Head wear to protect against weather conditions.

Safety glasses at all times.

Safety glasses when servicing equipment or working overhead to protect from loose or flying particles, drips, splashes, etc.

Safety glasses during welding/cutting operations. Flash shields are to be used during theses processes whenever possible.

VIOLATIONS

Violation of this policy will be subject to disciplinary action per Company Compliance Policies.

FALL PROTECTION/PREVENTION & EQUIPMENT POLICY

The Company is committed to the protection, safety and health of its employees. In keeping with this commitment, the Company provides its employees with numerous protective safety equipment devices.

All employees are required to comply with the Company's Safety Equipment Policy, which outlines use, maintenance and responsibility for safety equipment. The requirements for use of specific safety devices are described in the individual equipment policy statement.

The following requirements will constitute the policy for Fall Protection and Equipment:

POSITIONING SYSTEM:

Positioning systems are to be rigged to allow an employee to free fall not more than two (2) feet.

Positioning devices must be secured to an anchor point capable of supporting at least twice the impact load.

Positioning device systems **must be inspected** prior to each use. If found to be defective components are to be removed from service.

ANY PART OF A SYSTEM THAT IS WORN OR BROKEN MUST BE REPLACED IMMEDIATELY.

THIS IS NOT CONSIDERED A FALL ARREST DEVICE!!!!!

EMPLOYEES RESPONSIBILITIES:

Division Managers, Supervisors, and Blaster/Foreman are responsible for assuring that the systems on site are adequate for personnel needs.

Supervisors and Blaster/Foreman are responsible for assuring that the setup and use of the positioning system and ensuring the use of appropriate fall prevention equipment.

All employees are required to comply with the above Positioning System and utilize fall protection devices – safety belts, lanyards, lifelines, etc.

Within ten (10) feet of a quarry face.

In all areas where there are hazardous conditions of heights or loose footing which could result in a fall.

VIOLATIONS:

Violation of this policy will be subject to disciplinary action per Company Compliance Policies.

RESPIRATORY PROTECTION POLICY

The Company is committed to the protection, safety and health of its employees. In keeping with this commitment, the Company provides its employees with numerous protective safety equipment devices.

All employees are required to comply with the Company's Safety Equipment Policy, which outlines use, maintenance and responsibility for safety equipment. The requirements for use of specific safety devices are described in the individual equipment policy statement.

The following requirements will constitute the policy for Respiratory Protection.

Respiratory protection is required when employees may be exposed to contaminate breathing conditions including, but not limited to, high dust levels, toxic contaminants and areas of poor ventilation.

ALL EMPLOYEES:

All employees are required to:

Use respiratory protective devices, which are suitable for and applicable to existing jobsite conditions.

Clean and inspect protective devices daily.

Store all protective devices in a clean/sanitary location.

Report/return all defective devices to the Safety Specialists.

Check protective devices for proper fit and request replacement when required.

Check with Safety Specialists if there are questions regarding the need for or use of protective devices.

VIOLATIONS:

Violation of this policy will be subject to disciplinary action per Company Compliance Policies.

EMPLOYMENT AGREEMENT

I, the undersigned, certify that I have read and understand Maine Drilling & Blasting's policy statements on:

General Work Rules
Safety Equipment Responsibility
Motor Vehicle Use and Assignment
Drug and Alcohol Abuse

By accepting employment or continuing employment with Maine Drilling & Blasting, Inc., I agree to comply with all of the Company requirements, Federal Motor Carrier Safety Regulations and any and all federal, state or local laws and regulatory requirements applicable to my employment.

_____I understand that the responsibilities of my position make me subject to drug/controlled substance/alcohol screening. I agree to this condition of my employment and will submit to screening/testing as required by law and Company.

_____I understand that current regulations do not require that I be subject to drug/controlled substance/alcohol testing.

I understand that my failure to honor the terms of this agreement will be grounds for termination of my employment or my application for employment with the Company.

_____
Employee Signature

_____
Name

_____
Date

EMERGENCY PROCEDURES-PERSONAL INJURY

All personal injury situations are priority. Prior to any other activity, employees are to:

Provide all possible emergency assistance on-site.

Determine type of injury.

Call for/obtain emergency medical care or transport.

GENERAL EMERGENCY PROCEDURES

Once medical care has been obtained, Drivers/Supervisors are to:

Immediately notify Division Manager, Safety Specialists or Corporate Administrative Manager of the accident.

Identify witnesses including:
- Name
- Address
- Telephone #'s
- Obtain a written statement from witnesses, if possible.

Complete a Loss Control Report. All Loss Control Reports are to be completed and forwarded to the Safety Department on the date of the accident by the end of the workday.

Complete and Accident Report per regulatory statutes.

All media contacts or requests are to be referred to Division Managers or Safety Specialists.

VIOLATIONS

Violations of this policy will be subject to disciplinary action per Company Compliance Policies.

EMERGENCY PROCEDURES
EQUIPMENT ACCIDENT

All equipment operators will be trained in Company emergency procedures and are to cooperate with all efforts in the event of a motor vehicle accident.

COMPANY RESPONSIBILITIES:

The Company will provide for:

Education and training of operators in safe operation techniques.

Education and training of all field employees in emergency medical procedures.

First Aid Kits for all jobsites.

All necessary forms for purposes of documentation and compliance with Company reporting requirements.

EMPLOYEE RESPONSIBILITIES

Division Managers and Safety Specialists are responsible for training employees in emergency and safe operating procedures.

Supervisors and operators are responsible for completing and investigation and submitting a Loss Control Report.

Safety Specialists are responsible for all follow-up investigation reports and documentation activity for all bodily injury and property damage claim.

Corporate Administrative Officer is responsible for all follow-up investigation reports and documentation activity for workers' compensation claims.

EMERGENCY PROCEDURES – PERSONAL INJURY

All personal injury situations are priority. Prior to any other activity, employees are to:

Provide all possible emergency assistance on-site.

Determine type of injury.

Call for/obtain emergency medical care or transport.

GENERAL EMERGENCY PROCEDURES

Once medical care has been obtained, Supervisors/operators are to:

Immediately notify Division Manager, Safety Specialists or Corporate Administrative Manager of the accident.

Identify witnesses including:
- Name
- Address
- Telephone #'s

Obtain a written statement from witnesses, if possible.

Complete a Loss Control Report. All Loss Control Reports are to be completed and forwarded to the Safety Department on the date of the accident by the end of the workday.

All media contacts or request are to be referred to Division Managers or Safety Specialists.

Employees working with a General Contractor are expected to adopt and Follow the General Contractor's Emergency Procedures. If they do not meet Company requirements, immediately notify the Division Manager/Safety Specialists and provide whatever is necessary to assure the safety of the crew.

VIOLATIONS

Violations of this policy will be subject to disciplinary action per Company Compliance Policies.

BLOOD PATHOGEN POLICY

All jobsite employees will be trained in Company emergency procedures and are to cooperate with all efforts in the event of an emergency.

COMPANY RESPONSIBILITIES

The Company will provide for:

Education and training of field employees in emergency medical procedures.

First Aid Kits for all jobsites to include antiseptic towelettes.

All necessary forms for purposes of documentation and compliance with reporting requirements.

Telephone #'s and locations of medical care providers.

EMPLOYEE RESPONSIBILITIES

Division Managers and Safety Specialists are responsible for training employees in Blood Pathogen Control Procedures.

Safety Specialists, Supervisors and Blaster Foreman are responsible for providing all jobsite personnel with directions to established health care providers and the nearest emergency health care provider.

Supervisors and Blaster Forman are responsible for completing an investigation and submitting a Loss Control Report.

Safety Specialists are responsible for all follow-up investigation reports and documentation for reported blood pathogen activities.

Corporate Administrative Officer is responsible for all follow-ups investigation reports and documentation activity for workers' compensation claims related to blood pathogen.

EMERGENCY PROCEDURES – BLOOD PATHOGENS

When rendering assistance to individuals excreting blood or bodily fluids, all employees must:

Whenever possible wear gloves and safety glasses while providing emergency assistance.

After contact with bodily fluids, wash hands with antiseptic towelettes.

Immediately notify Division Manager, Safety Specialists or Corporate Administrative Manager of exposure to blood pathogens.

Identify the injured party including:
- Name
- Address
- Telephone #'s

Complete a Loss Control Report. All Loss Control Reports are to be completed and forwarded to the Safety Department on the date of the accident by the end of the work day.

VIOLATIONS

Violations of this policy will be subject to disciplinary action per Company Compliance Policies.

EMERGENCY POLICY

An Emergency Policy has been developed to assist the Company in its efforts to eliminate or reduce personal injury and property loss and to demonstrate public responsibilities.

Any accident that occurs must be recorded, reported and investigated. Any incident or minor injury must be recorded and reported.

The Company Emergency Policy includes procedures for:

Personal Injury
Property Damage
Obtaining Medical Care
Reporting Requirements

The Emergency Policy requires that, **at all times,** emergency numbers be available for:

Local Police
State Police
Ambulance Service
Hospital/Doctor
Maine Drilling & Blasting Division Office
Maine Drilling & Blasting Corporate Office

Each procedure has specific requirements.

EMERGENCY PROCEDURES
PERSONAL INJURY/PROPERTY DAMAGE

All jobsite employees will be trained in Company emergency procedures and are to cooperate with all efforts in the event of an emergency.

COMPANY RESPONSIBILITIES

The Company will provide for:

Education and training of field employees in emergency medical procedures.

First Aid Kits for all jobsites.

All necessary forms for purposes of documentation and compliance with reporting requirements.

Telephone #'s and locations of medical care providers.

EMPLOYEE RESPONSIBILITIES

Division Managers and Safety Specialists are responsible for training employees in emergency procedures.

Safety Specialists, Supervisors and Blasting Foreman are responsible for locating health care providers in areas where none have been established and notifying the Corporate Administrative Officer of a contact person and telephone number.

Safety Specialists, Supervisors and Blaster Foreman are responsible for providing all jobsite personnel with directions to established health care providers and the nearest emergency health care provider.

Supervisors and Blaster Foreman are responsible for completing an investigation and submitting a Loss Control Report.

Safety Specialists are responsible for all follow-up investigation reports and documentation activity for all bodily injury and property damage claim.

Corporate Administrative Officer is responsible for all follow-up investigation reports and documentation activity for workers' compensation claims.

EMERGENCY PROCEDURES – PERSONAL INJURY

All personal injury situations are priority. Prior to any other activity, employees are to:

Provide all possible emergency assistance on-site.
Determine type and cause of injury.
Call for/obtain emergency medical care or transport.

GENERAL EMERGENCY PROCEDURES

Once medical care has been obtained, Supervisors/Blaster Foreman are to:

Immediately notify Division Manager, Safety Specialists or Corporate Administrative Manager of the injury.

Identify witnesses including:
- Name
- Address
- Telephone #'s

Obtain a written statement from witnesses, if possible.

Complete a Loss Control Report. All Loss Control Reports are to be completed and forwarded to the Safety Department on the date of the accident by the end of the workday.

All media contacts or requests are to be referred to Division Managers or Safety Specialists.

Employees working with a General Contractor are expected to adopt and follow the General Contractor's Emergency Procedures. If they do not meet Company requirements, immediately notify the Division Manager/ Safety Specialists and provide whatever is necessary to assure the safety of the crew.

VIOLATIONS

Violations of this policy will be subject to disciplinary action per Company Compliance Policies.

EMERGENCY PROCEDURES

VEHICLE ACCIDENT

All drivers/employees will be trained in Company emergency procedures and are to cooperate with all efforts in the event of a motor vehicle accident.

COMPANY RESPONSIBILITY

The Company will provide for:

Education and training of drivers in safe vehicle operation and defensive driving.

Education and training of field employees in emergency medical procedures.

First Aid Kits for all vehicles.

All necessary forms for purposes of documentation and compliance with Company reporting requirements.

EMPLOYEE RESPONSIBILITIES

Division Managers and Safety Specialists are responsible for training employees in safe driving and emergency procedures.

Drivers and Supervisors are responsible for completing and submitting a Loss Control Report and any Accident Reports required by statute.

Safety Specialists are responsible for all follow-up investigation reports and documentation activity for all bodily injury and property damage claim.

Corporate Administrative Officer is responsible for all follow-up investigation reports and documentation activity for workers' compensation claims.

HAZARDOUS MATERIALS POLICY

A Hazardous Materials Policy has been developed to assist the Company in its effort to eliminate or eliminate or reduce personal injury and property loss and to demonstrate public responsibilities.

To assure compliance with regulatory and statutory requirements, each office will be provided with a copy of:

Federal Motor Carrier Safety Regulations Pocketbook.
NFPA #495 Code for the Manufacturer, Transportation and Use of Explosive Material.
Copies of State Regulations.
OSHA Manual.
MSDS Manual.
Emergency Response Guidebook

The Company Hazardous Materials Policy includes procedures for:

Gas Welding
Arc Welding
Explosives Handling
Emergency Procedures

The Hazardous Materials Policy is subject to all Company safety and emergency policies and procedures.

The Hazardous Materials Policy requires that:

Hazardous materials data lists are available at all jobsites and offices. This list is to contain the types of hazardous materials being used, the product manufacturer and an emergency # for the product manufacturer. Any accident involving hazardous materials that occurs, must be recorded and reported.

All employees handling hazardous materials are trained in the proper handling of hazardous materials.

All hazardous materials be clearly marked and rated according to the National Fire Protection Association and regulatory authorities.

All jobsite employees are trained in Company hazardous materials procedures and are to follow Company emergency policies in the event of an accident/incident.

COMPANY RESPONSIBILITIES

The Company will provide for:

Education and training of all employees in procedures pertinent to hazardous materials.

Hazardous materials data lists for posting at all jobsites.

All necessary forms for purposes of documentation and compliance with reporting requirements.

Telephone #'s and locations of manufacturers and emergency medical care providers.

EMPLOYEE RESPONSIBILITIES:

Division Managers and Safety Specialists are responsible for training employees in hazardous materials procedures.

Safety Specialists, Supervisors and Blaster Foreman are responsible for providing:

All jobsite personnel with the jobsite location of the hazardous materials data list.

All jobsite personnel with directions to established health care providers and the nearest emergency health care provider.

Supervisors and Blaster Foreman are responsible for completing an investigation and submitting a Loss Control Report for any incident/accident involving hazardous materials.

All employees required by statute must:

Participate in hazardous materials training sessions.

Stay current on regulatory requirements involving hazardous materials.

Request assistance from Safety Specialists if they are unsure of standards, regulations, etc. of hazardous materials.

EMERGENCY PROCEDURES – PERSONAL INJURY/PROPERTY DAMAGE:

All employees are to follow Company policies and procedures for handling of emergencies in the event of an accident or incident involving hazardous materials.

PROCEDURES:

When handling or working with hazardous materials these procedures are to be followed at all times:

Gas/Arc Welders
Fire extinguishers will be available on all operations.
All cylinders or bottles will be handled in accordance with OSHA and ANSL standards.
Cylinders
Transported in vertical position.
Secured or chained to prevent tipping.
Caps installed when not in use.
0 will not be stored with any other gas including inert gases. 0 requires 20' distance from other gases in storage or a non-combustible barrier separating them. (i.e.) transit, asbestos board, metal or 5/8" minimum wallboard).
Frames of all Arc welding/cutting machines shall be grounded.
All cables shall be completely insulated and flexible – capable of handling maximum current requirements.
Flash shields will be used whenever possible.
Eye protection will be used by welder/cutter and helper.

Explosives

Fire extinguishers will be available on all operations.
No smoking, matches, flames or spark-producing devices or firearms within 50' of any explosive of flammable material.
Do not throw or drop explosives.
Keep types any sizes together.
Store cases flat, topside up, code date out.
Stack to avoid possibility of collapse.
Keep boxes closed.
Store only explosive materials (no tools, tires, etc.)
Store detonators separately.
Remove oldest stock first.

VIOLATIONS

Violation of any of the above could result in disciplinary action per Company Compliance Policies.

HAZARDOUS MATERIALS SPILL POLICY

All on and off-site work areas are subject to the control of the Federal and State DEP regulations. There are penalties and fines for regulatory non-compliance for employers and employees. Standards, procedures and reporting requirements must be followed.

COMPANY RESPONSIBILITIES

The Company will provide for:

Education and training of employees in DEP regulations and requirements for hazardous material spills.

Maintain current information on regulatory requirements.

All necessary forms for purposes of documentation and compliance with reporting requirements.

Reporting of all spills and the delivery of a "Spill Kit" to the site.

Telephone #'s and locations of DEP offices and contact persons, if available.

EMPLOYEE RESPONSIBILITIES

Division Managers and Safety Specialists are responsible for training employees in hazardous material spill procedures and regulatory changes.

Division Managers and Safety Specialists are responsible for all documentation and follow-up activities and required corrective action.

Supervisors and Blaster Foremen are responsible for completing an investigation and submitting a Loss Control Report.

All employees are responsible for taking action to contain the spill immediately.

All employees are to contact the Corporate Office as soon as possible to report the spill.

EMERGENCY PROCEDURES

All employees are to follow Company emergency policies and procedures for personal injury/property damage in the event of an accident or incident involving hazardous materials.

SPILL CLEAN-UP PROCEDURES

Identify the type of material spilled.
Take immediate action to contain the spill, stop the flow of discharge, etc.
Contact the Corporate Office and provide information on location, type and amount of spill and all emergency actions taken to contain the spill.
Stay with the spill until it is completely cleaned up or have been relieved by a Company officer/manager.
Take pictures if possible.
Record all events occurring before, during and after the spill including DEP contact, if required.

HAZARD COMMUNICATION PROGRAM

I. GENERAL INFORMATION

The following is the Written Program which outlines how Maine Drilling & Blasting, Inc. intends to comply with the letter and spirit of standard and policy is to inform Maine Drilling & Blasting employees of the potential hazards in their workplace, ways to safely work with those substances and how to find more information.

II. LISTS OF HAZARDOUS MATERIALS

The Division Safety Managers will coordinate the maintenance of lists containing the same names and location of all hazardous materials covered by the standard. These lists will be based on an initial inventory of substances used or stored on each jobsite and will be updated during regular on-site visitations. A master list of substances will be on file at the Company's main offices, Auburn NH, Gardiner ME and Barre VT. Separate lists of substances found at each jobsite will be readily available on the jobsite, along with other written elements required by the standard and additional information.

III. MATERIAL SAFETY DATA SHEETS

In addition to a substance list, the Safety Managers will coordinate the collection, filing and posting of "Material Safety Date Sheets" for all hazardous materials. These sheets will also be available, at each jobsite and the main office, to all employees for review and copying. MSDS are prepared by the manufacturer of the product and consist of technical information about the product, its hazards and safe handling recommendations. Upon receipt from the manufacturer or the supplier, the Safety Managers for completeness will review each data sheet.

An explanation of information contained on data sheets can be found in the MSDS Manual.

IV. LABELS

Each hazardous substance in a container of five gallons or more or weighing 20 pounds or more will be identified by a label which will include the product name, the manufacturer and a coded designation of the relative flammability, health hazard and chemical reactivity of the product, as well as special hazard warning symbols (see Appendix #2). Posters explaining the labeling system and the numerical hazard codes will be posted for easy reference (Appendix #3). The labeling system used by Maine Drilling & Blasting is that recommended by the National Fire Protection Association. With relation to relative hazards, the coding system is as follows:

4 = severe hazard
3 = serious hazard
2 = dangerous
1 = minor hazard
0 = no hazard

(Note: Caution is advised in interpreting these warnings, since they indicate POTENTIAL hazards, which can be minimized or eliminated with proper controls, such as appropriate ventilation and personal protective equipment as recommended on the data sheets.)

Smaller containers of hazardous substances, such as those available to the general consumer, contain consumer hazard warning information, which should be read and followed by workers who use those substances. Unlabeled small containers, such as those used when a substance is obtained from a larger labeled container, need to be labeled unless exclusively the person filing the smaller container and using its contents for uses the substance no longer for no longer than a work shift.

V. TRAINING

Every Maine Drilling & Blasting employee who works with or may become exposed to hazardous substances in the course of their work will be provided with training on at least the following subjects:

> Details of the Hazard Communication Standard and the Company's written program, ways to detect the presence of hazardous materials, physical and health hazards associated with exposure to the substances, permissible, exposure limits, how to find, read and interpret Material Safety Data Sheets, ways to protect themselves against potential health and safety hazards, what to do in a chemical emergency, how to find out more information.

Special emphasis will be given to hazardous substances, which are most commonly used at each jobsite and those, which have the potential for posing the greatest hazard.

VI. SUBCONTRACTORS

The requirements of this standard apply to all hazardous substances used or stored on Maine Drilling & Blasting jobsite, whether they are provided by Maine Drilling & Blasting or by the subcontractors. Under the requirements, all subcontractors are expected to inform Maine Drilling & Blasting of all hazardous substances they plan to introduce onto or use within the jobsite and to provide Material Safety Data Sheets for those products. Likewise, Maine Drilling & Blasting is to notify all subcontractors of hazardous materials being used by our workers in such a manner that subcontractor's employees may be exposed. Containers of hazardous substances brought on site by subcontractors must be labeled as to their contents and their hazards.

VII. HAZARDOUS SUBSTANCES

The Hazard Communication Standard covers thousands of substances considered hazardous. Products that may commonly be found on construction sites and which are part of this program fall into three general categories: 1. flammable and combustible materials, 2. compressed gases and 3. hazardous chemicals. While these terms identify three distinct generic classes of materials, it is important to realize that each class may present more than one type of hazard. For example, the principal hazard associated with flammable liquids is their ability to burn and explode. However, improper use can also result in adverse health effects. Long – term exposure to some flammable solvent vapors, for instance, can affect the lungs, kidney and central nervous system. Repeated contact with unprotected skin can cause severe skin reactions.

While it is virtually impossible to train employees on each of the individual chemicals to which they may be exposed, it is possible to provide training on hazards of groups of chemicals that have similar properties. For example, many paints, adhesives and cleaning solvents contain flammable liquids. Even though the nature of these products is different, they all have one thing in common: they are flammable liquids. An employee who has been trained in the nature of flammable liquids would be able to apply this knowledge of this class of materials to each of the individual flammable products.

Maine Drilling & Blasting has (3) three categories of workers with different degrees and types of exposures. The following breakdown by type is usual:

Flammable and Combustible Liquids

Common to all:

Diesel fuel
Heavy grease
Rock oil
Hydraulic oils
Lube oils

Maintenance:

Antifreeze
Waste oil
Cleaning solvents
Paints

Field Mechanic:

Gasoline
Starting fluids
Penetrating oils
Pipe compounds

Compressed Gases

Common to all:

Air
Nitrogen

Maintenance &
Field mechanic: Oxygen
Acetylene
Nitrogen

Hazardous Chemicals

Common to all: Vehicle exhaust

Production crews
only:

Various explosives
Detonating cords
Electric blasting caps

VII. SUPERVISORS' ROLE

It is the intent of Maine Drilling & Blasting to minimize, as much as possible, the time supervisors must spend in ensuring compliance with the letter and spirit of this standard. General coordination will be the responsibility of the Safety Manager. However, it is essential that supervisors understand the specifics of the standard so they may respond quickly to the questions or concerns of all employees. They also should be familiar with contents of the Hazard Communication binder provided to each jobsite, understand the hazard labeling system and be prepared to provide or acquire proper personal protective equipment when necessary. Supervisors should also:

Review data sheets whenever a covered substance is to be used,
Inform the workers of the potential hazards associated with the material,
File material safety data sheets that are delivered to a jobsite when products are purchased, Inform the Safety Manager when a new hazardous product is introduced on to the jobsite and provide the Safety Manager with a copy of the MSDS for office files.

When data sheets are submitted to supervisors by subcontractors, it will be the responsibility of the supervisor not only to post the data sheet but to inform all workers about the intended use of the product and precautions, if any, which need to be followed during the course of the workday.

Questions or Concerns Should be Directed to Your Regional Safety Specialists:

Maine Office	800-370-2338
New Hampshire	800-370-0299
Vermont	800-370-3341

MATERIAL SAFETY DATA SHEETS:

WHAT THEY SAY, WHAT THEY MEAN

The following pages contain detailed information about the contents of "Material Safety Data Sheets (MESS'S)" which are a vital part if Maine Drilling & Blasting's Hazard Communication program.

Included are a blank MSDS designed by OSHA as a recommended format for minimally required information; and an OSHA document which explains the nature of all required hazard information.

This material is part of Maine Drilling & Blasting's written Hazard Communication program, and is provided to make sure all workers understand the nature of the substances they may work with so they can do so in the safest possible manner.

Yours truly,

Safety Supervisor

MATERIAL SAFETY DATA SHEETS

Do you know what they are?

Do you know how to use them?

Do you know how to obtain them?

This program is designed to teach you how to read and understand material safety data sheets and how to identify potential problems which may occur while handling the material. It is also designed to help persons become more knowledgeable of hazardous materials coming into their facility and how to handle them.

The material safety data sheet has 8 major sections.

These sections are: manufacturer's information, hazardous ingredients, identity information, physical/chemical characteristics, fire and explosion hazard data, reactivity data, health hazard data, precautions for safe handling and control measures. We will now examine each of these sections separately.

SECTION 1: The chemical manufacturer's information section gives the identity as used on label or list, the chemical manufacturer's name, address, informational telephone number, emergency telephone number, the date the material safety data sheet was prepared, and a space for the preparer's signature which is optional.

Section 1 is provided for a quick reference on the material and emergency phone numbers in cases of incident involving the chemical substance.

SECTION 2: The hazardous ingredients/identity information section...

Lists the hazardous components by specific chemical identity and/or common names. It also gives the occupational safety and health administration's permissible exposure limits, the American Conference of Governmental Industrial Hygienist's threshold limit values, other limits recommended and space to mark in the percent of the substance, which is optional.

The hazardous components area lists the chemical name of the substance, the chemical abstract service number, the EPA number, generic name, trade name, synonyms or other identifying information, which might be needed to identify the material, incase of an emergency incident.

Other information such as the chemical formula, helps identify the material if for some reason it is spilled and then collected as a lab sample.

The OSHA P.E.L. or Permissible Exposure Limits are those limits identified by OSHA to be acceptable exposure for an 8-hour workday. These limits are set by the Occupational Safety and Health Administration and are enforceable by law.

ACGIH TLV represents the threshold limit value set by the American Conference of Governmental Industrial Hygienists. Threshold limit values refer to airborne concentrations of substances and represents conditions under which it is believed that nearly all workers may be repeatedly exposed, day after day, without adverse effects. Other recommended limits are those, which may have been determined by the manufacturer or other sources. The percent material gives the percent of that substance in the chemical as a whole with one hundred percent being a pure chemical substance.

SECTION 3: Physical and chemical characteristics section lists...

The general characteristics of the material such as boiling point, vapor pressure in millimeters of mercury, vapor density, water solubility, specific gravity, melting point, evaporation rate, appearance and odor. By knowing this

information you are able to understand how the material will react at room temperature and how it will react if heated, mixed with water or confined in an unventilated area.

To clarify the boiling point, we will use water as a standard, which boils at 212 degrees fahrenheit or 100 degrees Celsius. If your substance has a number lower than these it will boil at a lower temperature than water, if the number is higher it will boil at a higher temperature than water.

The vapor pressure of a substance to the pressure of a saturated vapor above a liquid in millimeters of mercury. For example, the vapor pressure of water at 20 degrees centigrade is 17.5 millimeters of mercury. The lower the boiling point of a liquid, the higher the vapor pressure.

The vapor density refers to the weight of the vapor or gas compared to an equal volume of air. Air is rated as one (1) this is important for you to know because if your material is less than one (1), it will rise up in the atmosphere. If it is greater than one (1), it will sink to the ground. This will help determine what emergency actions to take in the event of an accidental spill. Factors such as window currents, traffic, and heat can make the effects of vapor irrelevant.

Water solubility indicates how well the substance you are working with will mix with water.

The specific gravity of a liquid indicates if the material is heavier or lighter than water using one (1) water. If the number is greater than one (1), the material will sink in water. If the material is less than one (1), it will float on the top of water.

It is important to note whether the material will float, sink or become water-soluble and mix with the water.

This information is helpful in determining whether or not water is to be used to control or cleanup on accidental spill.

The melting point of a material indicates the temperature at which the material will convert from a solid state to a liquid state. Evaporation rate is the rate in which the material will convert from the liquid state into the vapor state at any given temperature or pressure. Butyl acetate is used as a point of reference with an evaporation rate of one (1).

Appearance and odor describes the material appearance and/or odor at 70 degrees Fahrenheit. This will help in the event more than one substance has been spilled.

SECTION 4:

The flash point and method used to determine it, flammable limits of the substance, L.E.L. or (Lower Explosive Limit), U.E.L. or (Upper Explosive Limit), the extinguishing media most effective for fire suppression, special fire fighting procedures, and any unusual fire and explosion hazards to be aware of, this information is important to understand before you start to use the substance in your workplace or operation.

The flash point indicates the lower temperature at which a substance will give off enough vapors to form an ignitable mixture with air to produce a flame when a source of ignition is present.

The flammable limits are those limits at which the percentage of a substance in air will burn once it is ignited.

The L.E.L. or (Lower Explosive Limit) for flammable liquids is the minimum vapor concentration below which ignition will not occur. The U.E.L. or (Upper Explosive Limit) for flammable liquids is the maximum vapor concentration above which ignition will not occur.

Extinguishing media are those agents that will put out a fire or extinguish the material once it is burning.

Special fire fighting procedures are those actions, which will be taken if the substance should be involved in a fire.

Unusual fire and explosion hazards are those hazards, which will occur if the material is heated or exposed to fire or flame.

SECTION 5: Reactivity data is information....

About the stability, incompatibility, hazardous decomposition or by-products and hazardous polymerization.

Stability indicates whether the material is stable or not in its normal state and it also gives those conditions that should be avoided, i.e. ignition sources. Incompatibility indicates which materials to avoid while using this substance, i.e. oxidizers, acid, water.

Hazardous decomposition or products relates information on what will happen to the substance if mixed with other substances or if it should ignite. It also gives the by-products of that reaction. Hazardous polymerization indicates whether the material will form a more dangerous product as it decomposes. The conditions to avoid are those, which in most cases will allow polymerization to occur.

SECTION 6: Health hazard data lists...

The possible routes of entry a substance may take into the body, health hazards-acute and chronic, carcinogenicity, signs and symptoms of exposure, medical conditions generally aggravated by exposure, and emergency and first aid procedures are all referenced in this section.

Routes of entry describe the route a substance can take to enter the body. Those routes are inhalation or breathing...

Direct skin contact or skin absorption and ingestion. Health hazards are those health related problems that can occur if the material does enter the body. These are broken into two categories, acute and chronic. Acute are those problems that will manifest themselves in a relatively short period of time. Chronic, on the other hand, are those problems, which take longer to manifest or become noticeable. Carcinogenicity will indicate whether the substance is suspected or considered to be a carcinogen and will indicate who has designated the substance as such.

The three agencies generally used are the National Toxicology Program, the International Agency for Research of Cancer, and the Occupational Safety and Health Administration. Other reliable sources can also be used. This section will be designated with a yes/no rating or otherwise noted under the responsible organization.

Signs and symptoms of exposure are those signs and/or symptoms, which will occur when exposed to the substance. A sign is something that can be seen, whereas a symptom is when you feel the problem or someone tells you of the problem such as a headache. Medical conditions generally aggravated by exposure are those conditions which can increase any medical problems or conditions a person may have prior to working with the such as asthma, or an allergic reaction.

Emergency and first aid procedures are specific procedures...

Which should be followed in the event the material has spilled onto, or entered into, the body.

SECTION 7: Precautions for safe handling and use lists...

The steps to be taken in case material is released or spilled, waste disposal methods, precautions to be taken in handling and storing, as well as other precautions.

Steps to be taken in case material is released or spilled are those actions, which have to be taken to minimize the spread of the material and to be able to clean up the spilled material.

The waste disposal method specifies what to do with the material once it is cleaned up and whether or not the material has to be disposed of in accordance with local, state or federal agencies.

Precautions to be taken in handling and storing, relates those actions that have to be taken when the material is being handled or when it is stored. Other precautions are additional precautions that should be kept in mind while handling or storing the material.

SECTION 8: Control measures lists...

The respiratory protection, ventilation, protective gloves, eye protection, other protective clothing or equipment and work/hygienic practice.

Respiratory protection indicates the type of respiratory protection needed when you are handling the substance.

Ventilation indicates the type of exhaust needed when working with the material, whether it is local exhaust...

Mechanical or general exhaust, special and other types, which may be needed to supplement the existing exhaust system.

Protective gloves specify the property type of protective gloves to be used on the material. Eye protection determines the proper eye protection to be used while working with or handling the substance.

Other protective clothing or equipment lists other types of protective clothing or equipment needed while working with or handling the material...

This equipment would be the same type of equipment used to clean up a spill as noted in Section # 7.

Work/hygienic practices are those practices, which should be in place while using this substance in your facility, such as health monitoring programs and safety chemical handling procedures.

This slide shows an example of a completed material safety data sheet as it should be when you receive the substance or, better still, prior to your receiving the product.

As you can see none of the sections or blocks are left blank. This is required of the manufacturer by federal regulation.

If you should have any questions with the information provided on the material safety data sheets be sure to contact the manufacturer prior to using the material.

Being familiar with material safety data sheets and all the information they contain is essential in the work place.

The time to make sure all the records and safety equipment are in order IS BEFORE AN ACCIDENT OCCURS!!!!

It could be the key element in saving a life, reducing costly damage to your facility, or causing irreversible damage to the environment.

Being prepared should be everybody's motto!

Qualifications

Personnel Qualifications

Key Personnel and Projects
(Project list will refer to each person involved)

Key Personnel
Project "Field" Superintendent – 1 will be present on the project. Their responsibilities will include supervision/aid in running the drill rig, grouting, stressing, and superintendent duties. The drill operator will work under one of these season drillers, we have many experienced drillers with 2-5 years of operating experience and they will work under the direction of the superintendent.

- William Stover
  - Employee with Maine Drilling & Blasting 2006 to present.
  - Laborer, Driller, Rock Anchor Specialist/Field Superintendent.
- Paul Lavalle
  - Employee with Maine Drilling & Blasting 1982 to present.
  - Laborer, Driller, Blaster, Rock Anchor Specialist/Field Superintendent.
- Donald Stone
  - Employee with Maine Drilling & Blasting 1994 to present.
  - Laborer, Driller, Blaster, Rock Anchor Specialist/Field Superintendent.

Project Engineer

- Peter Marcotte
  - Employee with Maine Drilling & Blasting 2002 to present
  - Field Engineer, Project Engineer, Sr. Project Engineer.
  - B.S. Geological Sciences, University of Maine 2002

Chief Engineer

- William Scott
  - Employee with Maine Drilling & Blasting 2011 to present
    - Chief Engineer
  - Employee with NextEra Energy Maine Operating Services 2008-2011
    - Project Manager
  - Employee with Cianbro Corporation 1990-2008
    - Estimating Manager
  - B.S. Civil Engineering, University of Maine 1986
  - Licensed Professional Engineer – Maine

Key Projects

- See following page

Various Recent Projects Involving the Maine Drilling & Blasting Rock Anchoring Personnel

Donald Stone	William Stover	Paul Lavalle	Peter Marcotte	William Scott	TYPE	PROJECT NAME	LOCATION	DATE INSTALLED	LENGTH	# OF ANCHORS	DIAMETER	CAPACITY	INCLINATION	OWNER OR GC
	x	x	x	x	Electrical	ME Power Reliability Program; Transmission Line Anchors	Statewide, ME	2014 Underway	10-40 ft	400 +	1" & 1.25"	10-66 kips	45-60 degrees	Cianbro Corp
	x	x	x	x	Electrical	ME Power Reliability Program; Transmission Line Anchors	Statewide, ME	2014 Underway	10-40 ft	900 +	1" & 1.25"	10-66 kips	45-60 degrees	L. E. Myers
	x	x	x	x	Electrical	ME Power Reliability Program; Transmission Line Anchors	Statewide, ME	2014 Underway	10-40 ft	350 +	1" & 1.25"	10-66 kips	45-60 degrees	Hawkeye LLC
x			x	x	Communication	Rutland Airport Beacons	Rutland, VT	2014	25	12	2"	25 kips	45-60 degrees	Northern Pride Communications
x			x	x	Communication	Cell Tower; Foundation Modification	Burlington, VT	2014	5	4	1"	50 kips	Vertical	Prescott Towers
	x		x	x	Marine	Bath Iron Works; Pile Tensioning	Bath, ME	2014	155 ft	2	1.75"	300 kips	1:6 batter	HB Flemming
			x	x	Hydro	Mansfield Hollow Hydro Electric; Anchors for Penstock	Mansfield Hollow, CT	2013	20 ft	6	1"	60 kips	Vertical	Sealand Enviro
			x	x	Communication	Cell Tower; New Tower Foundation	Claremont, NH	2013	30 ft	25	1.375"	152 kips	Vertical	Belden Company, Inc
	x		x	x	Electrical	Bangor Hydro Electric; NRI Guy Anchor Upgrade (Re-Rate)	Costigan, ME	2013	15 ft	20	1"	25 kips	45-60 degrees	Bangor Hydro Electric
	x	x	x	x	Communication	Cell Tower; Foundation Modification	Brunswick, ME	2013	24 ft	12	1"	89 kips	Vertical	Eastern Communications
	x		x	x	Communication	Cell Tower; New Tower Guy Foundation	Madawaska, ME	2013	15 ft	24	1"	25 kips	Vertical	Soderberg
	x	x	x	x	Electrical	Transmission Line Guy Anchors; CMP; Section 105 Rebuild	Saco, ME	2013	20 ft	13	1"	18 kips	45-60 degrees	Haugland Energy
		x	x	x	Misc	WWTP Outfall; Micropiles & Rock Anchors	Old Town, ME	2013	40 ft	13	1" & 1.75"	50-266 kips	Vertical	R. F. Jordan
x			x	x	Wind	Kingdom Community Wind; Foundation	Lowell, VT	2013	40-50 ft	420	2.5"	515 kips	Vertical	Reed & Reed
	x		x	x	Building	Hyatt Hotel; Foundation	Portland, ME	2013	45 ft	4	1.75" & 2.25"	250 kips	Vertical	Consigli Construction
		x	x	x	Stabilization	Ret Wall Stabilization; Reinforcement Dowels	Bangor, ME	2013	15-30 ft	60	1" & 1.75"	unstressed	Vertical	Cianbro Corporation
	x		x	x	Building	Building Footings; BIW Building Upgrade	Bath, ME	2013	75 ft	2	1.375	190 kips	Vertical	H. B. Fleming
	x		x	x	Hydro	Black Bear Hydro	Orono & Stillwater, ME	2013	35 ft	4	1.75	320 kips	Vertical	Bancroft Contracting Corp.
x			x	x	Highway	Mason Road Bridge Replacment	Lewis, NY	2012	12 ft	12	.75	10 kips	Vertical	A.P. Reale
		x	x	x	Hydro	Cumberland Mills Fishway; Sappi Paper Mill	Westbrook, ME	2012	45 ft	34	1.375	160 kips	Vertical	Bancroft Contracting Corp.
		x	x	x	Communication	Cell Tower; Foundation Modification	Buckfield, ME	2012	15 ft	3	1"	10 kips	Vertical	Wireless Construction
		x	x	x	Communication	Cell Tower; New Tower Foundation	Dedham, ME	2012	25 ft	12	1.375"	131 kips	Vertical	Eastern Communications
		x	x	x	Communication	Cell Tower; Foundation Modification	Eddington, ME	2012	10 ft	6	3/4"	10 kips	Vertical	Wireless Construction
	x	x	x	x	Electrical	Downeast Reliability; Transmission Line Anchors	Ellsworth-Columbia, ME	2012	10-30 ft	300	1"	15 kips	45-60 degrees	3 Phase Line Construction
	x	x	x	x	Electrical	Section 241; Transmission Line Anchors	Benton-Bingham, ME	2012	10-30 ft	48	1"	15 kips	45-60 degrees	Michels Power
			x	x	Wind	Bull Hill Wind Towers; Foundation	Eastbrook, ME	2012	40-50 ft	92	2.5"	480 kips	Vertical	Reed & Reed
			x	x	Wind	Single Wind Tower; Varian Semiconductor; P&H Foundation	Gloucester, MA	2012	50 ft	24	3.0"	636 kips	Vertical	J. K. Scanlan
x			x	x	Electrical	Section 340 Dead End Rebuilds, Velco ROW	Northern, VT	2011	25 ft	55	1"	25 kips	45-60 degrees	Walsh Construction
			x	x	Hydro	Holtwood; Pre-Excavation Dowels	Holtwood, PA	2011	35 ft	120	1"	Unstressed	Vertical	Walsh Construction
		x	x		Communication	Cell Tower Site; Foundations	Buckfield, ME	2011	20 ft	3	1"	unstressed	Vertical	Wireless Construction
		x	x		Communication	Cell Tower Site; Foundations	Dedham, ME	2011	25 ft	12	1.25" & 1.375"	121 kips	Vertical	Eastern Communications
	x	x	x		Wind	Record Hill Wind Towers; Foundation	Roxbury, ME	2011	40-50 ft	360	2.5"	480 kips	Vertical	Reed & Reed
	x	x	x		Electrical	Section 64; Transmission Line Anchors	Enfield to Bradley ME	2011	10-30 ft	77	1"	15 kips	45-60 degrees	Hawkeye LLC
		x	x		Hydro	Riverside Station; Brookfield Power; Penstock Replacement	Berlin, NH	2010	26 ft	8	1"	102 kips	Vertical	Bancroft Contracting Corp.
	x		x		Communication	Cell Tower; New Tower Guy Foundation	Millinocket, ME	2010	30 ft	6	1"	78 kips	Vertical	NDC Communications LLC
	x	x	x		Wind	Rollins Wind Towers; Foundation	Lee, ME	2010	45 ft	518	2.5"	480 kips	Vertical	Reed & Reed
	x	x	x		Wind	Rollins Wind; Transmission Line Anchors	Lee, ME	2010	15 ft	312	1"	30 kips	45-60 degrees	3 Phase Line Construction
	x		x		Wind	Brodie Mnt Wind; Foundation	Hancock, MA	2010	45 ft	140	2.5"	480 kips	Vertical	Reed & Reed
	x		x		Electrical	Substation; Transmission Line Anchors	South Gorham, ME	2010	30 ft	6	1"	66 kips	45-60 degrees	Cianbro Corp
	x		x		Wind	Kibby Wind Towers; Foundation	Kibby Township, ME	2009	40-55 ft	616	3"	700 kips	Vertical	Reed & Reed
	x		x		Wind	Kibby Wind; Transmission Line Anchors	Kibby Township, ME	2009	15 ft	261	1"	30 kips	45-60 degrees	3 Phase Line Construction
	x		x		Wind	2 Wind Tower; Princeton Municipal Light; STV, Inc. Found.	Princeton, MA	2009	50 ft	16	1.75"	312 kips	Vertical	Methuen Construction
	x		x		Wind	Stetson Wind Towers; Foundation	Danforth, ME	2008	40-60 ft	532	2.5"	360 kips	Vertical	Reed & Reed
	x		x		Wind	Stetson 2 Wind Towers; Foundation	Danforth, ME	2008	45 ft	140	2.5"	480 kips	Vertical	Reed & Reed
	x		x		Building	Washburn Doughty Facility; Foundation	East Boothbay, ME	2008	40 t	128	1.375"	120 kips	Vertical	Sheriden Corp.
	x				Wind	Single Wind Tower; P&H Foundation	East Otis, MA	2008	40 ft	14	2.5"	385 kips	Vertical	SED, Inc
	x				Building	Bath Iron Works; Pile Tensioning	Bath, ME	2007	50 ft	128	1.75"	130 kips	Vertical	HB Flemming
	x				Wind	Mars Hill Wind Towers; Foundation	Mars Hill, ME	2006	45 ft	392	2.5"	360 kips	Vertical	Reed & Reed

Drilling Equipment

Atlas Copco Hydraulic Drill Rig

ROC® D3

Ideal for tough pioneering work and for urban area work sites

Hole diameter 41-89 mm (1 5/8″ - 3 1/2″)

Atlas Copco

The new ROC D3 -offers high capacity

Compact and limited in dimensions - the new ROC D3 bench-drilling rig performs well, even on rough ground, and the boom has a reach of up to 5.2 m. It also has a powerful engine, double drill steel support and is equipped with Aluminium feed with cylinder feeding. Teamed up with various COP rock drills, this folding boom rock-drilling unit makes a very strong double act. It offers unsurpassed access on all ground, no matter how rough it is.

Hydraulic rock drill
The ROC D3 series has a selection of two different hydraulic rock drills: COP 1240 and COP 1640.

Aluminium feed
The rigid aluminum profile, is stronger and less sensitive to bending stresses than traditionally steel beams, and is fitted with a cylinder feed with hydraulis drill steel support to provide better collaring and a constant, even feed force on the bit.

Drill steel support
The drill steel support is accurately and securely guiding the drill rod. On the ROC D3-01 there is a double drill steel support as standard, on the -03 model its a single movable drill steel support.

EASY TO MANOEUVRE IN DIFFICULT TERRAIN

The bench-drilling rig is compact in size to manoeuvre and provides the answer whenever you need the advantages of long reach in difficult terrain. The tracks have ±15° oscillation, smooth and efficient, but still sufficiently quick to ensure excellent mobility in difficult terrain. This, together with a ground clearance of 340 mm, means that good, all-round access comes easy to the ROC D3. The machine's generous coverage saves time in tough conditions, where it is essential to be able to work effectively. In a nutshell the ROC D3, dubbed a "medium size" rig, is a drilling rig which gives good, all-round efficiency and meets user demands for very high performance. At the same time, the ROC D3 also satisfied all criteria for simplicity and good, purpose-built design features. The drilling unit is of modular construction, using tried and tested components from other Atlas Copco equipment.

ROC D3 - VALUE FOR MONEY

Taken all round, this is an alternative which gives considerably increased productivity thanks to its good ground clearance, powerful drive motors and built-in compressor. Its low fuel consumption and high capacity make it ideal for mediumsized sites, for drilling in built-up areas and for drilling in the dimension stone industry. It is important to have a drill rig you can rely on. The ROC D3 has a Cummins QSB4.5 engine and an Atlas Copco screw type compressor to ensure good flushing air capacity. The medium-sized rig has rapidly become a real favourite. It adapts easily and effortlessly to both construction work on small and medium sites, drilling in built-up areas and work in the dimension stone industry. A hydraulic winch and hydraulic support leg are also available as optional extras.

Drilling panel.

Hydraulic support leg.

Hydraulic winch.

Feed mounted angle instrument.

Separated percussion hoses.

EXTRA LONG REACH

The ROC D3 has been specially designed to give you the greatest possible reach on hilly ground - a full 5.2 metres, which is now standard on the new

ROC D3 -03 model. The powerful drive system in the new rig, with two strong hydraulic motors, high ground clearance and a low centre of gravity, combine to enable the rig to get just about anywhere, and reach ground speeds of up to 3 km/h. The ROC D3 comes with two different rock drills: COP 1640 or COP 1240.

LARGE FLUSHING AIR CAPACITY

A more than ample compressor, delivering up to 95 l/s of flushing air, makes the ROC D3 a truly dependable workhorse. The machine's impressive flushing air capacity has been specially developed and designed for drilling in the toughest conditions, and the engine power provides enough reserve capacity to help in really tough situations. The ROC D3 is suitable for a range of hole diameters which are common on medium-sized contracts or for assignments which require compact rock-drilling equipment, well suited to the terrain.

Technical Data

ALUMINIUM CYLINDER FEED

ROC D3 -01
BMH 6314/12-SF with RHS 51

Travel length	4240 mm	14’
Feed rate, max.	0,92 m/s	180 ft/min
Feed force, max.	20 kN	4400 lbf
Feed swing	± 45°	± 45°

ROC D3 -03
BMH 2314/12-SF (with RAS 51 as option)

Travel length	4070 mm	13’4”
Feed rate, max.	0,33 m/s	98 ft/min
Feed force, max.	12 kN	2160 lbf
Feed swing	± 45°	± 45°

ENGINE

Cummins QSB4.5

Rating at 2000 rpm	116 kW
Emission standard	Tier 3/Stage 3

COMPRESSOR

Atlas Copco Screw Compressor

Working pressure	8.5 bar	123 psi
FAD at 8.5 bar		
(-01 ver.)	95 l/s	200 cfm
(-03 ver.)	80 l/s	170 cfm

TRAMMING

Travel speed, max	3.3 km/h	1.9 mph
Traction force	90 kN	16185 lbf
Hill climbing ability	30°	30°
Track oscillation	± 15°	± 15°
Ground clearance	340 mm	13.4”

TRANSPORT DIMENSIONS, approx

Weight		
ROC D3-01 with RHS 51	10 500kg	23 150 lb
ROC D3-03 with rod rack	9 500 kg	20 950 lb
ROC D3-03 with optional RAS	9 700kg	21 400 lb
Length	10050 mm	33 ft
Width	2400 mm	7.9 ft
Height	2900 mm	9.5 ft

HYDRAULIC ROCK DRILLS

COP 1640

Impact power	16 kW	22 HP
Working pressure	200 bar	2900 psi
Torque	530 (700)Nm	391 (516)lbf.ft
Weight	184 kg	406 lb

COP 1240

Impact power	12 kW	16 HP
Working pressure	210 bar	3045 psi
Torque	700 Nm	516 lbf.ft
Weight	151 kg	331 lb

STANDARD EQUIPMENT

Reduced impact pressure mechanism
Anti-jamming system
Automatic feed force control (RPC-F)
Fuel saving device at rod handling
Engine RPM step setting
Two-speed traction
Dust collector DCT 140 F
Rod rack 2+1 rods (-03)
Feed extension 1000 mm
CE-norm equipped
Work lights
Double drill steel support (-01)
Single drill steel support (-03)
Rod handling system RHS 51 (-01)

OPTIONAL EQUIPMENT

(selection)
Hydraulic winch
Hydraulic support leg
Electric refuelling pump
Mechanical inclination instrument
Air flow control switch
Anti-freeze equipment, for compressed air
Rod handling system RAS (-03)
Electronic angle instrument HQS 9
Sleeve retainer
ProCom rig navigation system

ROC D3	Drill Steel Type	Drill Steel Diameter		Recommended Hole Diameter	
-01/-03	Drifter rod (single pass)	32 mm	1 1/4”	41-64 mm	1 5/8”-2 1/2”
-01/-03	Extension rod	32 mm	1 1/4”	48-64 mm	1 7/8”-2 1/2”
-01/-03	Extension rod	38 mm	1 1/2”	64-76 mm	2 1/2”-3”
-01	Extension rod	45 mm	1 3/4”	76-89 mm	3”-3 1/2”

Coverage area, horizontal

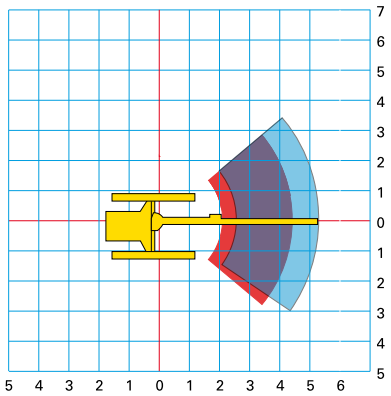

Coverage area, vertical

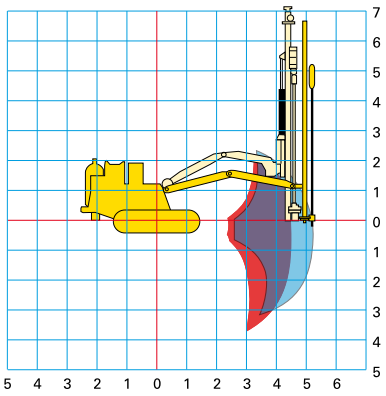

Illustrations in this brochure may show equipment with optional extras. Specifications and equipment subjects to change without notice.
Consult your Atlas Copco sales company for specific information. © Atlas Copco Rock Drills AB, 2003. All rights reserved.

0703
9851 2293 01e

Atlas Copco

www.atlascopco.com

2. Technical data

ROC D3-01

Weight (standard equipped without drill steel and extra equipment)

ROC D3-03	
Weight without RHS	10000 kg
Weight with RHS and counterweights	10500 kg
Winch	280 kg

Performance

Diesel engine, Cummins	
power output at 2000 rpm	116 kW
Temperature range in operation	-25 °C to +50 °C(Option +55 °C)
Tramming speed, max.	1.3/3.3 km/h
Tractive force	95/37 kN
Ground pressure, average	0.15 N/mm2
Ground clearance	340 mm
Max. hydraulic pressure	230 bar
Track oscillation	±15°
Noise level	
Idling (1600 rpm)	108 dB(A)
Full engine speed (2350 rpm)	113 dB(A)
Drilling (2350 rpm)	123 dB(A)
LWA (guaranteed value in accordance with 2000/14/EC)	126 dB(A)

Tilt angles

Note

Stability is specified with respect to CE standards stipulating that rigs must not be operated on inclines steeper than 20 degrees without the use of a winch.

Tilt angles - tramming	
downward/upward, max. without winch	20°/20°
downward/upward, max. with winch	30°/30°
laterally, max.	20°/20°
Tilt angles for drill rig when drilling:	
Longitudinally, max. (Upward/Downward)	20°/20°
Lateral (left/right)	10°/10°

Hydraulic systems

Hydraulic oil cooler for max. ambient temperature	+50°C

Electrical system

Voltage	24 V
Batteries	
Voltage	2 x 12 V/185 Ah
Working lights	
Voltage	24 V/70W
Generator	
Voltage	28V/55Ah

Air system

Compressor: XA 70	
Max. air pressure	8.5 bar
Free air delivery at 7 bar	70 l/s
Working pressure	7 bar

Capacities

Hydraulic oil reservoir	200 l
Hydraulic systems	
total	270 l
Fuel tank	280 l
Traction gear	3 l
Compressor oil	24 l
Lubricating oil tank	5 l
Diesel engine	11 l
Engine cooling system	20 l

Miscellaneous

Fire extinguisher	
A-B-C powder	1 x 6 kg

Dimensions

Dimensions (-01)

Transport dimensions

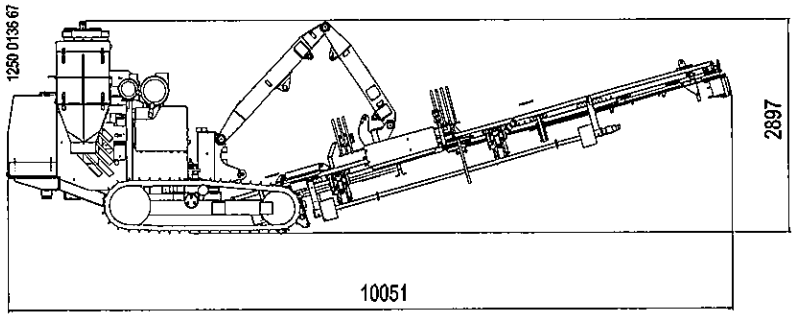

Figure: Transport alternative 1

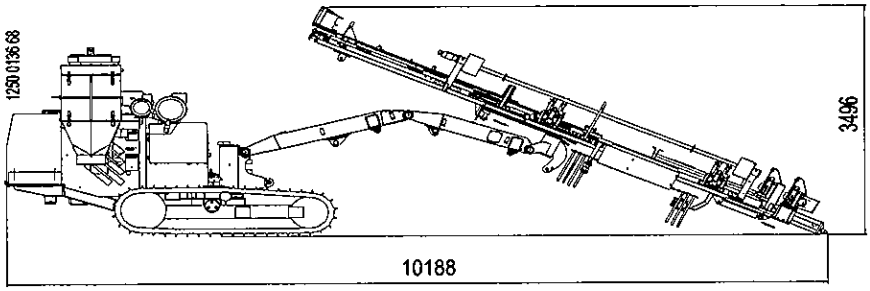

Figure: Transport alternative 2

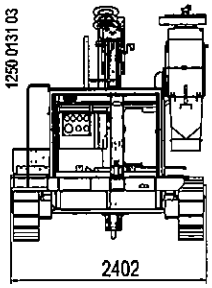

Figure:

Service ranges

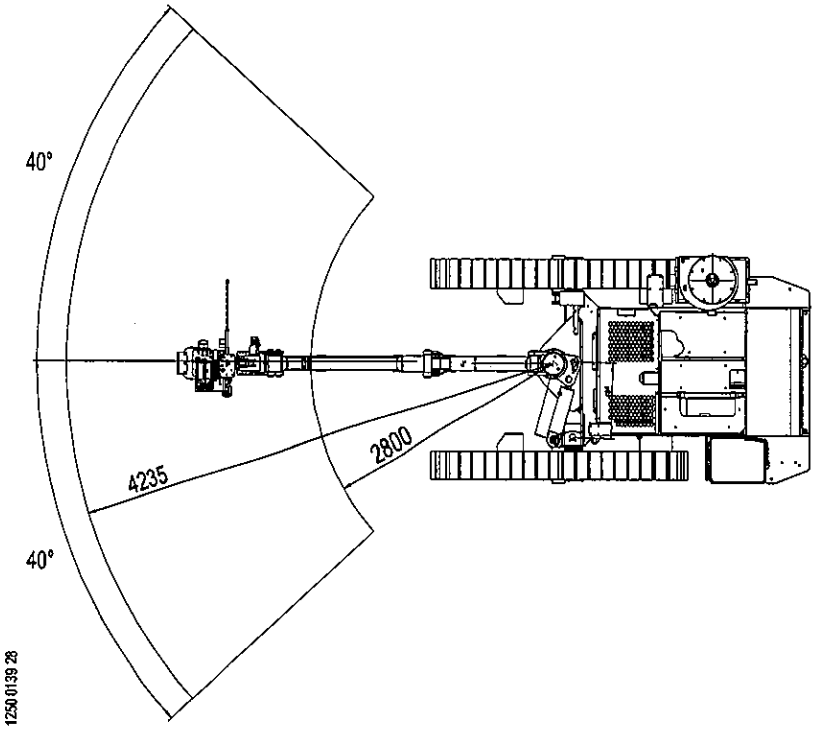

Figure:

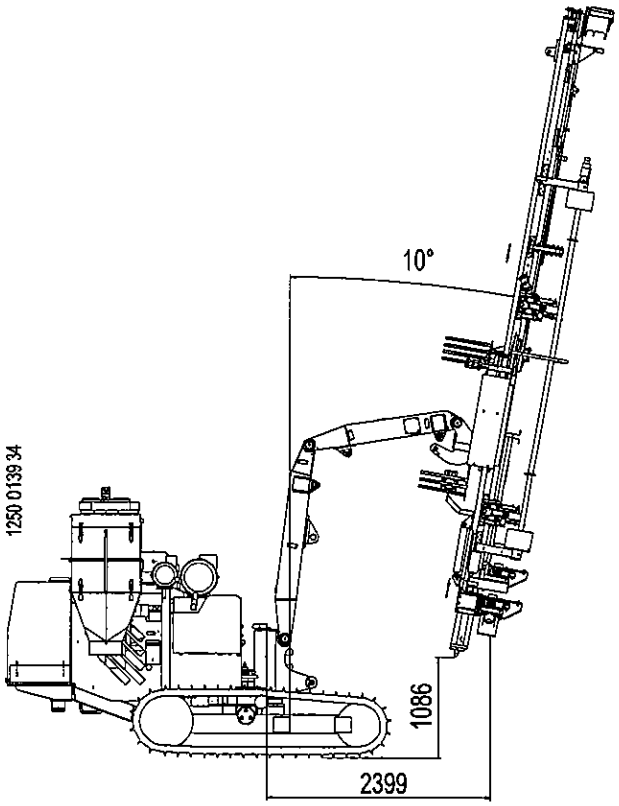

Figure:

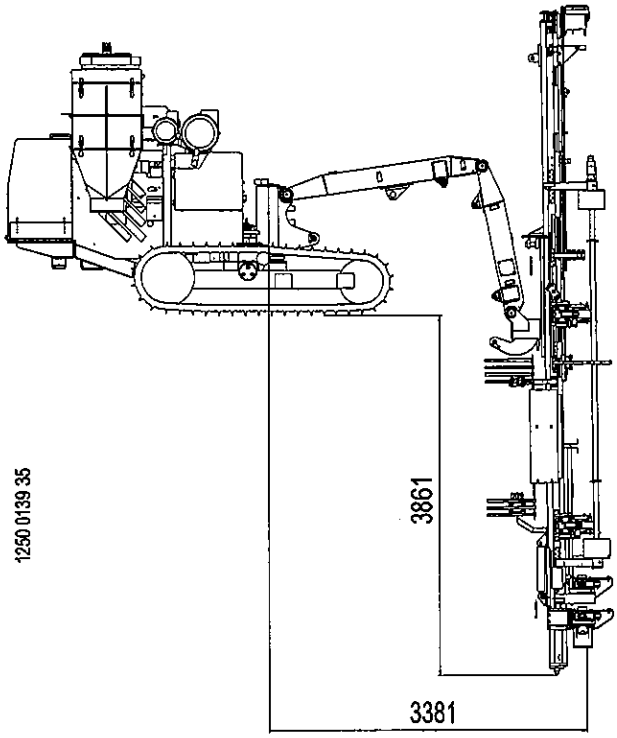

Figure:

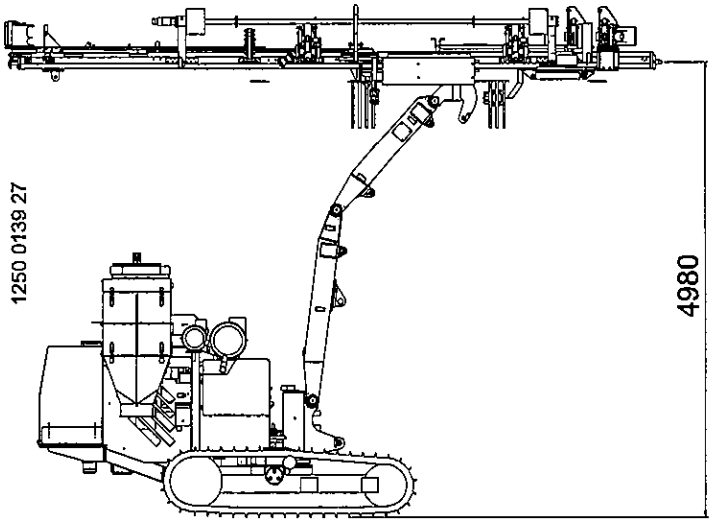

16.33 feet

Figure:

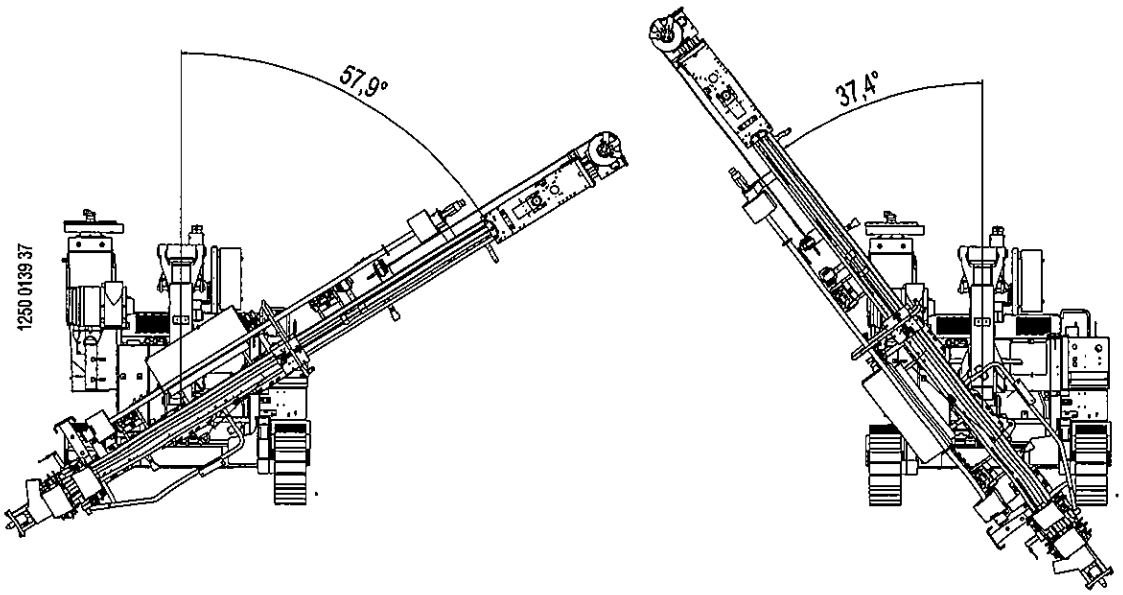

Figure:

U.S. Department
of Transportation
**Federal Highway
Administration**

April 2006

Office of Bridge Technology
400 Seventh Street, SW
Washington, D.C. 20590

Publication No. Unassigned

Full Publication available:
http://www.cflhd.gov/programs/techDevelopment/geotech/hollowcore/Hollow_Core_Soil_Nails_SOP.pdf

HOLLOW-CORE SOIL NAILS STATE–OF–THE–PRACTICE

CHAPTER 10. FIELD TESTING OF HOLLOW-CORE SOIL NAILS

The testing frequency and procedures for hollow-core soil nails do not vary from those for solid-bar nails described in FHWA (1996, 2003). However, as indicated in the previous chapter, development of the unbonded length for hollow-core soil nails is complicated by the basic requirement that the circulating grout must egress from the mouth of the drill hole. This continuous grout flushing through the drill hole mouth tends to bond the entire length of the nail. The testing is further complicated by the basic analytical model used to design soil nail walls.

Development of Unbonded Length

The procedure commonly used to achieve an unbonded length is pictorially shown in Figures 22 to 26. The procedure involves sliding a PVC tube over the nail before installation so that only the bonded length to be tested is exposed to the grout. The PVC tube must have an internal diameter larger than the outside diameter of the hollow-core bar but smaller than the outside diameter of the coupler. The ends of the PVC tube are duct-taped to prevent ingress of the grout in the annulus between the PVC tube and the hollow-core bar (see Figure 22). The PVC-outfitted hollow-core bar is then attached to the string of hollow-core bar already installed in the ground (see Figure 23). Once the string of hollow-core bars has reached its target depth and the entire nail length is flushed with the final grout as described earlier, the grout surrounding the installed nail is allowed to cure for at least three days. The duct tape at the end of the PVC tube at the mouth of the drill hole is then removed and the PVC tube is trimmed as necessary to permit attachment of the testing setup.

The PVC tube with the duct tape can be used on bar segments between couplers to develop an unbonded zone of the desired length. In this case, the coupler would still be bonded. However, since the exterior of the coupler is smooth (i.e., not threaded) and the coupler length is typically 150 to 229 mm (6 to 9-inches), the pullout resistance provided in the length of the coupler is insignificant compared to that in the bonded length.

The PVC tube technique breaks the grout-steel bond in the unbonded zone since there is no grout in the annulus between the PVC tube and the outside of the hollow-core soil nail. Because of the PVC tube's smooth exterior surface, the bond between the outside of the PVC tube and the grout is usually broken during the first or second increment of the design load. This is also true for the relatively smooth exterior surface of the coupler. Thus, it is often observed that the load deformation curve shows elastic movement less than 80% of the theoretical elongation up to the first or second increment of the test load which is typically 50% of the design load. This is not a reason for concern as long as the elastic criterion is satisfied at maximum test loads.