Hayward Baker Inc.
Mid-Atlantic Area Office
1875 Mayfield Rd
Odenton, MD 21113
Tel: 410-551-1980
Fax: 410-551-8206

HAYWARD BAKER
A Keller Company

KELLER

WELDING PROCEDURE SPECIFICATION (WPS)

AWS D1.1-2010

PQR: PREQUALIFIED

MATERIAL:	**ASTM A36, A53 GRADE B, A500, A572 GR50,A992**
WELDING PROCESS:	**SHIELDED METAL ARC WELDING (SMAW)**
SEMI-AUTOMATIC OR MANUAL:	**MANUAL**
FILLER METAL SPECIFICATION:	**AWS A5.1**
FILLER METAL CLASSIFICATION:	**E7018 (Lincoln)**
POSITIONS :	**ALL POSITIONS (VERTICAL UP)**
SINGLE OR MULTIPLE PASS:	**MULTIPLE OR SINGLE**
SINGLE OR MULTIPLE ARC:	**SINGLE**
SHIELDING GAS	**NA**
WELDING CURRENT:	**DCEP**
POLARITY:	**ELECTRODE POSITIVE**
WELDING PROGRESSION:	**VERTICAL UP**
ROOT TREATMENT:	**CLEAN AS REQUIRED**
PREHEAT TEMPERATURE:.....	**1/8" TO 3/4"= NONE (WHEN ABOVE 32F)** **b. OVER ¾" TO 1-1/2"=50F** **c. OVER 1-1/2" TO 2-1/2"=150F** **d. OVER 2-1/2"= 225F**

NOTE 1: WHEN BASE MATERIAL IS BELOW 32 DEGREES F , PREHEAT OF 70 DEGREES F IS REQUIRED
NOTE 2: WHEN AMBIENT TEMPERATURE IS BELOW 0 DEGREES F NO WELDING IS ALLOWED

SIZE	AMPS	VOLTS	PASS
3/32	80±10%	22±7%	ALL
1/8	115±10%	23±7%	ALL
5/32	150±10%	24±7%	ALL

APPROVROVED FOR ALL PREQUALIFIED JOINTS PER AWS D1.1-2010 WELDING CODE STEEL

APPROVED FOR ALL FILLET WELDS

Procedure

See page 2 of 2

For Joint Details

NOTE 3: ADJUST TRAVEL SPEED TO PRODUCE A SMOOTH WELD BEAD. WHEN DESIRED SETTINGS ARE FOUND, NOTE THEM ON THIS PROCEDURE AND CONTINUE USING THOSE SETTINGS +/- 10% TO INSURE CONTINUITY.

Maruice Grenier,CWI and weldingprocedures.com are not liable for any welding work conducted with the use of this procedure.
The user is responsible to verify any seismic or CVN requirements for each application of this procedure.

PROCEDURE NO. HBI-SMAW-E7018-Point REVISION NO. 0

PREPARED BY: Maurice Grenier,CWI
DATE: 10/1/13 weldingprocedures.com

AWS
QC 1
MAURICE N. GRENIER
92040551
CWI

Hayward Baker Inc.
Mid-Atlantic Area Office
1875 Mayfield Rd
Odenton, MD 21113
Tel: 410-551-1980
Fax: 410-551-8206

HAYWARD BAKER
A Keller Company

KELLER

Dimensions

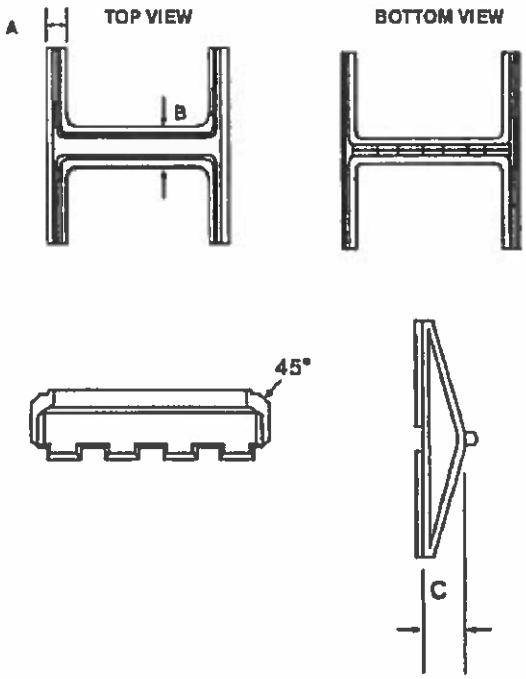

ASTM A148 90/60 - Heat Treated

	10"	12"	14"
A	1"	1-1/4"	1-1/4"
B	1-1/4"	1-7/16"	1-3/4"
C	2-9/16"	2-5/8"	2-15/16
WT	14	23	30

NORMAL FOUNDRY TOLERANCES APPLY

Installation Instructions

Super Bite Point Series PAR-T

1. Fit point onto the end of the square cut pile end.
2. Weld point to the pile in either flat or vertical position using AN E70XX electrodes.
3. Weld across full width of flange following chart below for minimum size weld.

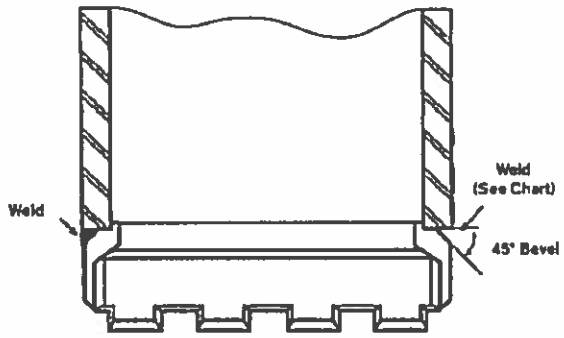

Pile Size	Flange Thickness	Min. Size Groove Weld
HP 14 x 117	.805	7/16
x 102	.705	3/8
x 89	.615	3/8
x 73	.505	5/16
HP 12 x 84	.685	3/8
x 74	.610	3/8
x 63	.515	5/16
x 53	.435	5/16
HP 10 x 57	.565	5/16
x 42	.420	5/16

PROCEDURE NO. HBI-SMAW-E7018-Point REVISION NO. 0

PREPARED BY: Maurice Grenier,CWI
DATE: 10/1/13 weldingprocedures.com

AWS
QC 1
MAURICE N. GRENIER
92040551
CWI

I hereby certify, under penalties of perjury, that the information contained on this Work Record is true and correct.

Welder's Signature

WELDING PROCESS	FILLET WELDS	GROOVE WELDS ¾" MAX. POSITION	GROOVE WELDS UNLIMITED
SMAW	F H V O	[redacted]	F H V O
FCAW	[redacted]	[redacted]	[redacted]
GMAW	[redacted]	[redacted]	[redacted]
SAW	[redacted]	[redacted]	[redacted]

ISSUED BY THE
MASSACHUSETTS
HIGHWAY DEPARTMENT

DATE

METALS CONTROL ENGINEER

WELDER QUALIFICATION CERTIFICATE

NAME Steven Hirst

SOC. SEC. # 036-58-1658

CERTIFICATE NO. 07745

WORK RECORD

This work record must be presented to the Engineer before beginning work. A Massachusetts Resident Engineer or Clerk of the Works or Superintendent representing the owner must sign this certificate at least once every six months for the certificate to remain valid. This signature merely indicates that the welder performed the work with the process indicated within the time period.

SIGNATURE	PROJECT	DATE	PROCESS USED
[illegible]	[illegible]	8/1/06	SMAW
[illegible]	[illegible]	1-07	SMAW
[illegible]	[illegible]	[illegible]	SMAW
[illegible]	Fitenes	1-15-08	SMAW
[illegible]	Mottegan Sun	7-10-08	SMAW
[illegible]	[illegible]	[illegible]	SMAW
[illegible]	[illegible]	[illegible]	SMAW
[illegible]	Yale	5/6/10	SMAW
[illegible]	MIT	1/14/11	SMAW
[illegible]	Winchester [illegible]	2/12/11	SMAW
[illegible]	"	3/20/11	SMAW
[illegible]	Pier 2	6/11/11	SMAW
[illegible]	Hutman	7/18/11	SMAW
[illegible]	Yale	9/15/11	SMAW
[illegible]	Berklee	12/2/11	SMAW
[illegible]	NBC Wash	8/12/12	SMAW
[illegible]	NBC CSO	1-2-13	SMAW
Jim Smith	610 Main	6-8-13	SMAW
Tom Reynolds	95 Viaduct	1-3-14	SMAW
Tom Reynolds	Old Colony	6-20-14	SMAW