CCS Constructors Inc.

Supply & Erect Structural Steel and Precast
Crane Service Rigging Pile Driving Heavy Hauling

Erection Plan for Precast Concrete NEXT BEAMS
Rochester, VT
ER BRF 0162(17)
Bridge 16

July 21, 2014

General Requirements:

The erection shall not be performed during windy or heavy rain conditions. This submittal covers the erection of the four NEXT beams. Erection of the abutments and approach slabs is submitted separately.

A Link Belt **238 HSL** (150-ton) crawler crane and Grove **GMK 5275** hydraulic truck crane will be used for the erection. The **238 HSL** is to be outfitted with ABC+A (all) of manufacturer's supplied counterweights, and the **GMK 5275** is to be outfitted with 169,700 lbs (all) of manufacturer's supplied counterweights. Alternatively, a Link Belt **LS-248 HII** (200-ton) crawler crane outfitted with ABC counterweights may be used instead of the **GMK 5275** crane (see Layout Drawing 2 instead of Layout Drawing 1).

The units shall be picked from the locations and lifting apparatus shown in the J.P. Carrara & Sons Inc. shop drawings, and shall be installed according to the manufacturer's requirements and project specifications. Each NEXT BEAM unit is to be picked from (4) locations, as shown on J. P. Carrara's shop drawings. Each crane is to hook onto J.P. Carrara's lift beam, which is to be hooked directly to the NEXT BEAM lifting strands using 35-ton minimum pins. See the attached list for rigging weights and tallies. Rigging sizes listed are minimum; slightly larger rigging is permissible.

NEXT BEAMS 1 through 4 were set previously on bridge 15. Bridge 16 contains NEXT BEAMS 5 through 7.

The centers of gravity of NEXT BEAMS 5 and 7 are not at the centers of the piece widths. J.P. Carrara's 50-ton picking beams are to be hung from the crane hook for picking NEXT BEAMS 5 and 7 only. Rigging below the picking beams shall be as shown in the isometric drawing.

The maximum permissible crane radius for unloading and setting the Next Beam units is shown on layout drawing, and shall not be exceeded. The unloading area is to be behind the **238 HSL** crane.

Two W36x230 (ASTM A36 or better) steel beams with diaphragms and skates, termed a "slider system" herein will be used to support one end of each NEXT beam in rolling it across the span. Calderwood Engineering ETC, LLC and Miller Construction designed this system for erecting heavier NEXT beams on another V.A.O.T. project (see attached photographs). Design calculations have been reviewed and are sealed herein, for pertaining to this project only. All diaphragms shown in the attached layout drawing shall be connected to the W36x230 beams as shown in the attached diagrams. Set W36 slider beams on 4" minimum thick by 2 rows 8" minimum wide hardwood blocking on the bridge abutment seats. Blocking may be thickened at the low end of the bridge.

The center of gravity of the NEXT BEAM unit shall be centered on the width of the slider beam system skate. For both NEXT BEAMS 5 and 7, the center of gravity is **5 7/8"** off from the center of the unit width, towards the curb. Hence the curb edges are to be closer to the center of the skate than the non-curb edges. See J. P. Carrara's shop drawings for additional information on the center of gravity locations. The center of gravity of NEXT BEAM 6 is at the center of the unit width.

The sub-base beneath the tractor, cranes, and slider system shall be 2 feet minimum of compacted structural gravel.

The NEXT BEAMS are to be set from the North, working toward the South.

<u>Sequence:</u>

1. The **238 HSL** is to pick one end of the #5 NEXT beam (as indicated on the attached layout drawing) from the steerable dolly, and remain hooked on. The tractor truck is to remain hooked on.
2. The steerable dolly is to be carefully removed from under the NEXT beam.
3. The **238 HSL** is to set the end of the NEXT beam onto hardwood blocking on the slider system skate, and unhook. An HP14 steel beam may be installed on top of the skate to widen the bearing surface and level the NEXT BEAM. THE CENTER OF GRAVITY OF THE NEXT BEAM UNIT SHALL BE CENTERED ON THE WIDTH OF THE SKATE.
4. The tractor is to slowly back up, pushing the NEXT beam across the span on the slider system. The tractor shall have a straight path to remain parallel to the slider rails for backing up.
5. The **GMK 5275** (or **LS-248 HII**) is to hook onto the receiving end of the NEXT beam upon it being within the safe lifting radius and coming to a stop.
6. The **238 HSL** is to hook onto the tractor supported end of the NEXT beam.
7. Both cranes are to simultaneously and gradually pick the NEXT beam and set it into the final position. The NEXT beam is to be kept level during the 2-crane pick.

8. Repeat steps 1-7 for the remaining NEXT beams. However, the last NEXT beam is to be set on 6 rows of hardwood blocking on top of the 2 center NEXT beams since the slider system is its place.
9. Either crane may pick the slider beam system and remove it from the final NEXT beam position. Both cranes are to hook onto the last NEXT beam and set it in the final position.

Andrew White

Andrew D. White, P.E.
July 21, 2014

STATE OF VERMONT
ANDREW D. WHITE
NO. 9030
STRUCTURAL
LICENSED
PROFESSIONAL ENGINEER

Digitally signed by Andrew White
Date: 2014.07.22 09:59:50 -04'00'

J. P. Carrara's 50-ton picking beam:

Connection to the crane hook shall be a 50-ton shackle (if hook does not accommodate hole in beam).
Connection to each slings shall be a 35-ton shackle.
(note NEXT BEAM is being picked with shackles connecting directly to lifting loops in J. P. Carrara's plant.)

Skate and support assembly, used in the Barnard erection:

Slider Beam assembly used in the Barnard erection:
Note diaphragms are constructed with steel heavy steel angles, which is prefered over timber 4x6s.

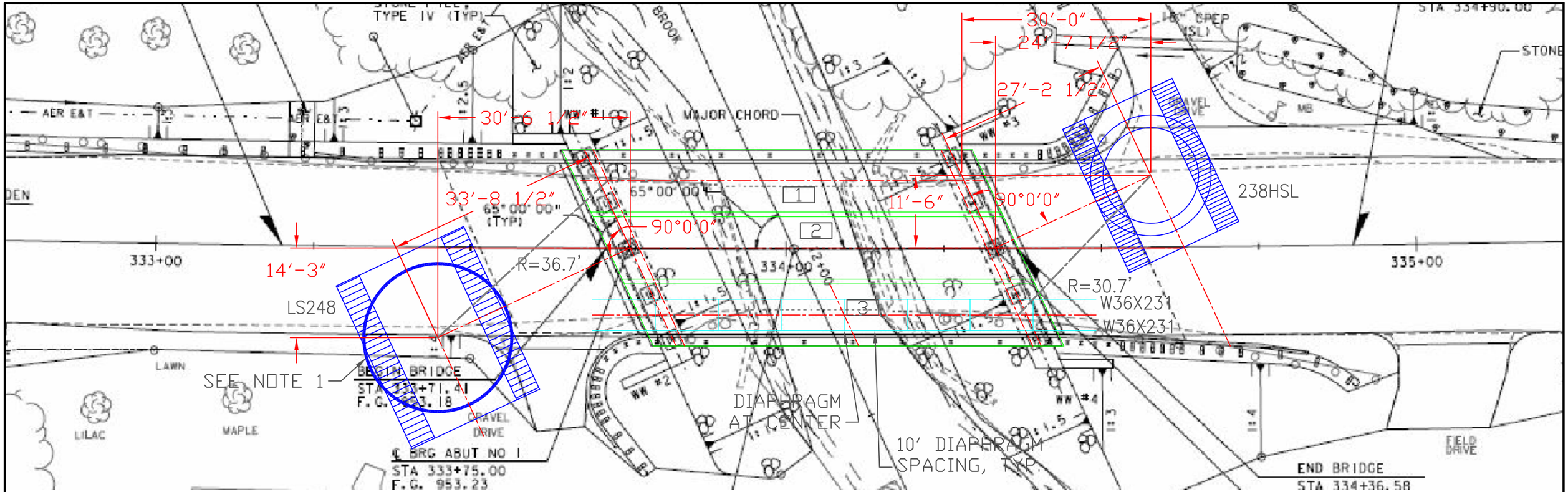

NOTES:

1) ABC COUNTERWEIGHTS REQUIRED FOR THE LS-248 HII.

2) PICK WEIGHT INCLUDES 5.0K CRANE BLOCK AND 0.6K LOAD LINE.

3) CRANE RADII ARE SHOWN NEXT TO BOOM LAYOUTS. DO NOT EXCEED WITHOUT CAPACITY VERIFICATION. SEE NARATIVE FOR ADDITIONAL INFORMATION.

LEGEND

[1] INDICATES SEQUENCE OF SETTING

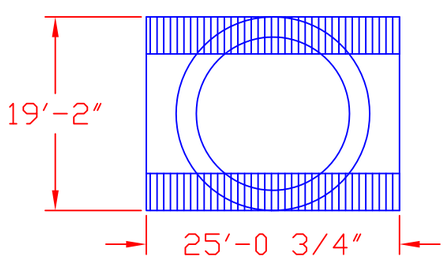

LINK BELT 238HSL CRAWLER CRANE

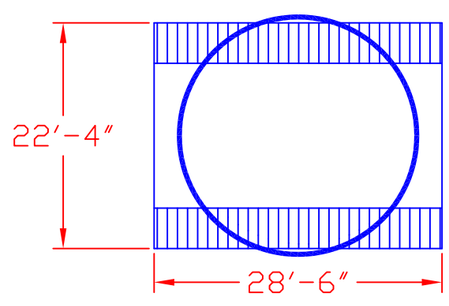

LINK BELT LS-248 HII CRAWLER CRANE

STATE OF VERMONT
ANDREW D. WHITE
NO. 9030
STRUCTURAL
LICENSED
PROFESSIONAL ENGINEER

ANDREW D. WHITE
7/21/14

CCS CONSTRUCTORS, INC 138 MUNSON AVE. MORRISVILLE, VT 05661 PH. 802-888-7701 FX. 802-888-4746	PROJECT NAME ROCHESTER, VT BRIDGE 16	PROJECT NO. BRF 0162(17)
	CRANE LAYOUT 1	DRAWING NO. 2
	SCALE 1"=15' DATE 7/21/14	

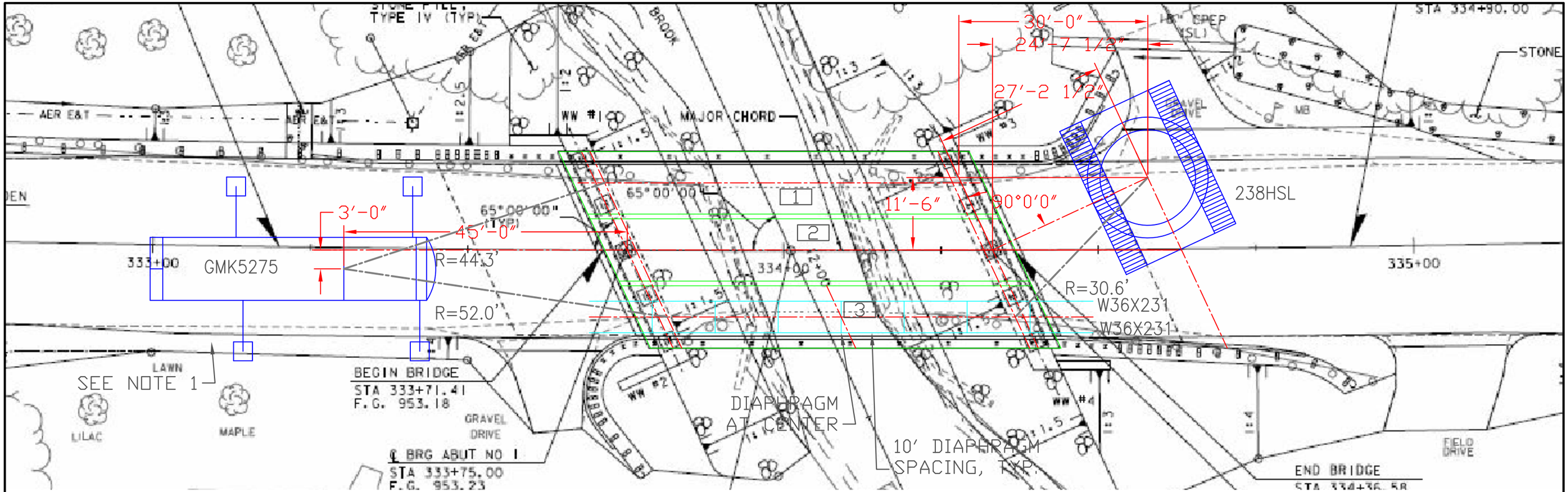

NOTES:

1) CRANE OUTRIGGERS SHALL BEAR ON 1" MIN. THICK STEEL PLATES OR CRANE MATS. ALL COUNTERWEIGHTS. REQUIRED.

2) PICK WEIGHT INCLUDES 5.0K CRANE BLOCK AND 0.6K LOAD LINE.

3) CRANE RADII ARE SHOWN NEXT TO BOOM LAYOUTS. DO NOT EXCEED WITHOUT CAPACITY VERIFICATION. SEE NARATIVE FOR ADDITIONAL INFORMATION.

LEGEND

[1] INDICATES SEQUENCE OF SETTING

STATE OF VERMONT
ANDREW D. WHITE
NO. 9030
STRUCTURAL
LICENSED
PROFESSIONAL ENGINEER

ANDREW D. WHITE
7/21/14

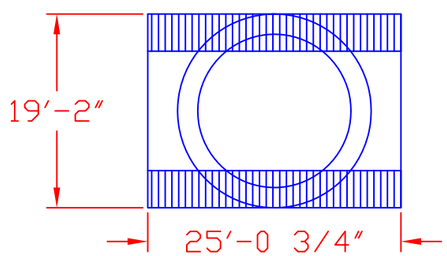

LINK BELT 238HSL CRAWLER CRANE

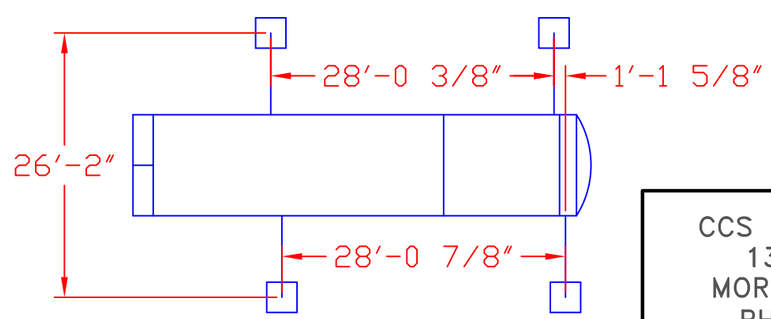

GROVE GMK5275 TRUCK CRANE

CCS CONSTRUCTORS, INC 138 MUNSON AVE. MORRISVILLE, VT 05661 PH. 802-888-7701 FX. 802-888-4746	PROJECT NAME ROCHESTER, VT BRIDGE 16	PROJECT NO. BRF 0162(17)
	CRANE LAYOUT 2	DRAWING NO. 1
	SCALE 1"=15' DATE 7/21/14	

CCS Constructors, Inc.
138 Munson Ave.
Morrisville, VT 05661
802-888-7701

STATE OF VERMONT
ANDREW D. WHITE
NO. 9030
STRUCTURAL
LICENSED
PROFESSIONAL ENGINEER

NB5:

item	quantity	wt each, kips	total wt, kips
precast NEXT beam 5	0.5	135.000	67.500
35-ton shackles/ pins at strands	2	0.050	0.100
J.P. Carrara's leveling beam	1	0.800	0.800
load line	1	0.600	0.600
crane block	1	5.000	5.000
total:			**74.000 kips**

238 HSL RADUS= 35', CAPACITY= 110.4 kips, 110' BOOM
GMK5275 RADUS= 55', CAPACITY= 85.0 kips, 119.1' BOOM
LS-248 HII RADUS= 40', CAPACITY= 94.4 kips, 160' or less BOOM

NB6:

item	quantity	wt each, kips	total wt, kips
precast NEXT beam 6	0.5	119.800	59.900
35-ton shackles/ pins at strands	2	0.050	0.100
J.P. Carrara's leveling beam	1	0.800	0.800
load line	1	0.600	0.600
crane block	1	5.000	5.000
total:			**66.400 kips**

238 HSL RADUS= 35', CAPACITY= 110.4 kips, 110' BOOM
GMK5275 RADUS= 55', CAPACITY= 85.0 kips, 119.1' BOOM
LS-248 HII RADUS= 40', CAPACITY= 106.0 kips, 160' or less BOOM

NB7:

item	quantity	wt each, kips	total wt, kips
precast NEXT beam 7	0.5	138.400	69.200
35-ton shackles/ pins at strands	2	0.050	0.100
J.P. Carrara's leveling beam	1	0.800	0.800
load line	1	0.600	0.600
crane block	1	5.000	5.000
total:			**75.700 kips**

238 HSL RADUS= 35', CAPACITY= 110.4 kips, 110' BOOM
GMK5275 RADUS= 55', CAPACITY= 85.0 kips, 119.1' BOOM
LS-248 HII RADUS= 40', CAPACITY= 106.0 kips, 160' or less BOOM

HSL 238 dimensions and Load Chart

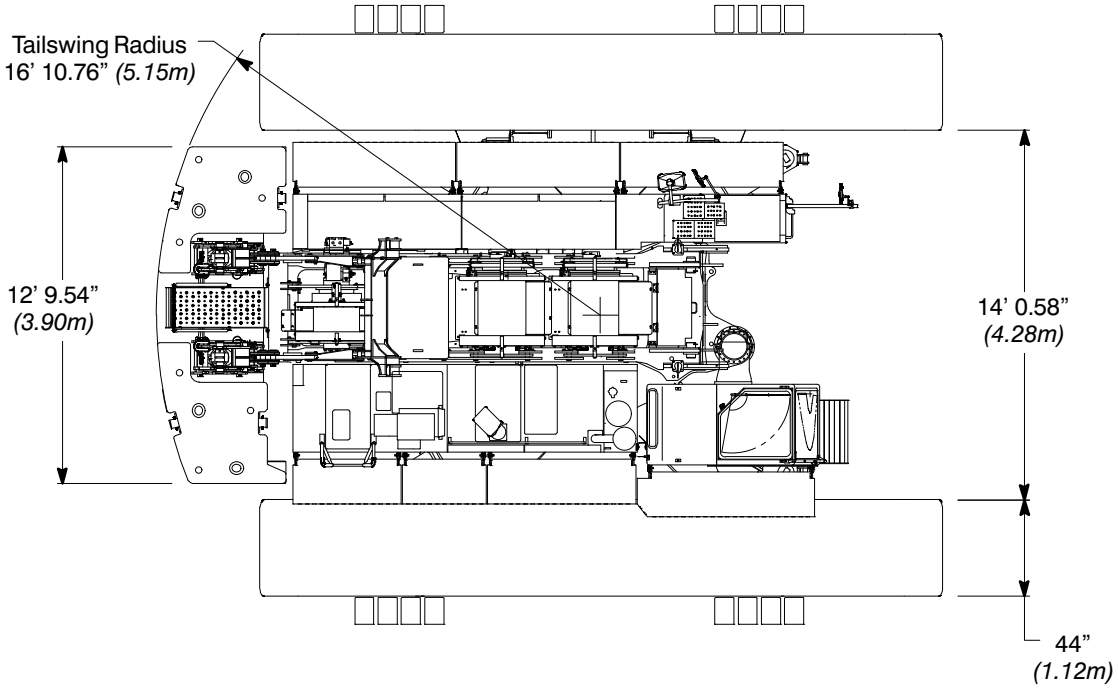

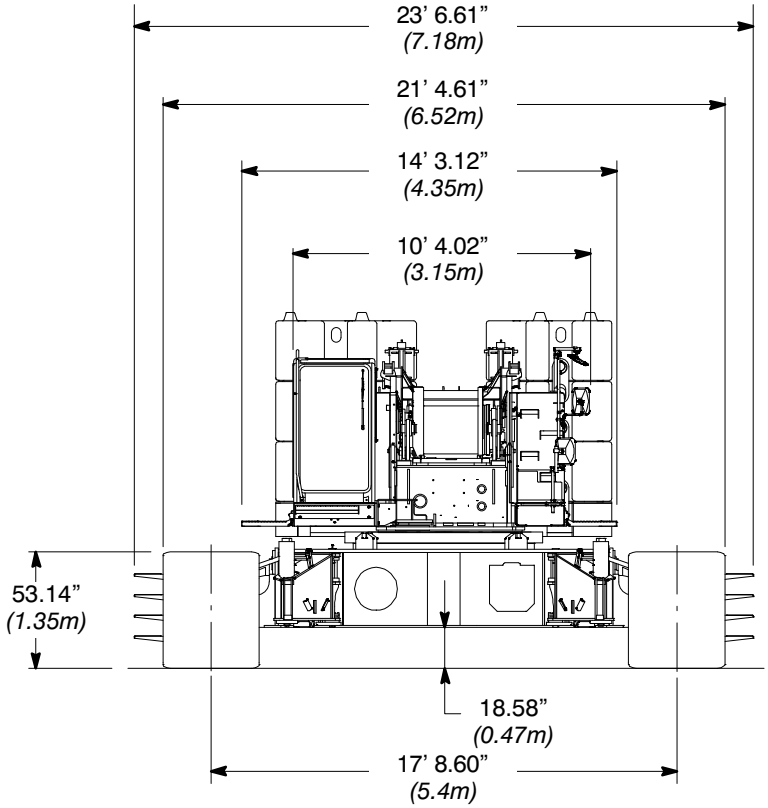

Main Boom Load Charts

Main Boom Lift Capacity Chart – 360° Rotation
ABCD = 107,600 lb (*48 807kg*) Counterweight
[All capacities are listed in kips (*mt*)]

Load Radius ft *(m)*	Boom Length - ft (m)											Load Radius ft *(m)*
	50 *(15.2)*	60 *(18.3)*	70 *(21.3)*	80 *(24.4)*	90 *(27.4)*	100 *(30.5)*	110 *(33.5)*	120 *(36.6)*	130 *(39.6)*	140 *(42.7)*	150 *(45.7)*	
14 *(4.3)*	300.0 *(136.1)*											14 *(4.3)*
15 *(4.6)*	287.7 *(130.5)*	273.4 *(124.0)*										15 *(4.6)*
16 *(4.9)*	271.0 *(122.9)*	269.1 *(122.1)*										16 *(4.9)*
17 *(5.2)*	256.2 *(116.2)*	254.1 *(115.3)*	240.4 *(109.0)*									17 *(5.2)*
18 *(5.5)*	242.8 *(110.1)*	240.8 *(109.2)*	236.6 *(107.3)*									18 *(5.5)*
19 *(5.8)*	230.7 *(104.6)*	228.8 *(103.8)*	228.1 *(103.5)*	213.9 *(97.0)*								19 *(5.8)*
20 *(6.1)*	219.8 *(99.7)*	218.1 *(98.9)*	217.4 *(98.6)*	210.6 *(95.5)*								20 *(6.1)*
25 *(7.6)*	177.4 *(80.5)*	175.9 *(79.8)*	175.5 *(79.6)*	175.0 *(79.4)*	174.4 *(79.1)*	167.7 *(76.1)*	155.2 *(70.4)*					25 *(7.6)*
30 *(9.1)*	138.9 *(63.0)*	138.5 *(62.8)*	138.6 *(62.9)*	138.6 *(62.9)*	138.5 *(62.8)*	138.3 *(62.7)*	138.2 *(62.7)*	136.6 *(62.0)*	126.2 *(57.2)*	117.6 *(53.3)*		30 *(9.1)*
35 *(10.7)*	111.2 *(50.4)*	110.7 *(50.2)*	110.8 *(50.3)*	110.8 *(50.3)*	110.7 *(50.2)*	110.5 *(50.1)*	110.4 *(50.1)*	110.2 *(50.0)*	110.0 *(49.9)*	109.8 *(49.8)*	104.7 *(47.5)*	35 *(10.7)*
40 *(12.2)*	92.5 *(42.0)*	92.0 *(41.7)*	92.0 *(41.7)*	92.0 *(41.7)*	91.9 *(41.7)*	91.8 *(41.6)*	91.6 *(41.5)*	91.4 *(41.5)*	91.2 *(41.4)*	91.0 *(41.3)*	90.8 *(41.2)*	40 *(12.2)*
50 *(15.2)*	68.6 *(31.1)*	68.0 *(30.8)*	68.1 *(30.9)*	68.1 *(30.9)*	67.9 *(30.8)*	67.8 *(30.8)*	67.6 *(30.7)*	67.4 *(30.6)*	67.1 *(30.4)*	66.9 *(30.3)*	66.7 *(30.3)*	50 *(15.2)*
60 *(18.3)*		53.5 *(24.3)*	53.7 *(24.4)*	53.6 *(24.3)*	53.5 *(24.3)*	53.4 *(24.2)*	53.2 *(24.1)*	53.0 *(24.0)*	52.8 *(23.9)*	52.6 *(23.9)*	52.3 *(23.7)*	60 *(18.3)*
70 *(21.3)*			43.8 *(19.9)*	43.8 *(19.9)*	43.7 *(19.8)*	43.6 *(19.8)*	43.4 *(19.7)*	43.2 *(19.6)*	43.0 *(19.5)*	42.7 *(19.4)*	42.5 *(19.3)*	70 *(21.3)*
80 *(24.4)*					36.7 *(16.6)*	36.6 *(16.6)*	36.4 *(16.5)*	36.1 *(16.4)*	35.9 *(16.3)*	35.7 *(16.2)*	35.4 *(16.1)*	80 *(24.4)*
90 *(27.4)*						31.4 *(14.2)*	31.2 *(14.2)*	31.0 *(14.1)*	30.8 *(14.0)*	30.6 *(13.9)*	30.4 *(13.8)*	90 *(27.4)*
100 *(30.5)*							27.1 *(12.3)*	26.9 *(12.2)*	26.7 *(12.1)*	26.5 *(12.0)*	26.2 *(11.9)*	100 *(30.5)*
110 *(33.5)*								23.5 *(10.7)*	23.3 *(10.6)*	23.1 *(10.5)*	22.9 *(10.4)*	110 *(33.5)*
120 *(36.6)*									20.6 *(9.3)*	20.4 *(9.3)*	20.1 *(9.1)*	120 *(36.6)*
130 *(39.6)*										18.1 *(8.2)*	17.9 *(8.1)*	130 *(39.6)*
140 *(42.7)*											15.9 *(7.2)*	140 *(42.7)*

This material is supplied for reference use only. Operator must refer to in-cab Crane Rating Manual and Operator's Manual to determine allowable crane lifting capacities and assembly and operating procedures.

3 119 100

	Crane with 169 700 lbs (77 t) counterweight Outrigger base - length 28.1 ft - width 26.6 ft							
	Main boom - fixed length in ft							
	117.1	117.2	118.0	119.1	132.0	132.4	133.4	134.5
Tel. sec. I	0.00	0.00	0.00	0.50	0.00	0.00	0.50	1.00
Tel. sec. II	0.00	0.00	0.50	0.50	0.00	0.50	0.50	0.50
Tel. sec. III	0.00	0.50	0.50	0.50	0.00	0.50	0.50	0.50
Tel. sec. IV	0.50	0.50	0.50	0.50	1.00	0.50	0.50	0.50
Tel. sec. V	1.00	0.50	0.50	0.50	1.00	0.50	0.50	0.50
Tel. sec. VI	1.00	1.00	0.50	0.00	1.00	1.00	0.50	0.00
Slewing range	360°							
Radius in feet	Lifting capacities in 1000 lbs							
20.0	62.0	76.0	116.0	144.0	61.0	78.0	106.0	106.0
25.0	55.0	67.0	108.0	140.0	56.0	71.0	106.0	106.0
30.0	49.0	60.0	98.0	129.0	51.0	64.0	101.0	105.0
35.0	43.6	55.0	90.0	118.0	46.0	58.0	94.0	96.0
40.0	38.8	50.0	82.0	108.0	41.2	53.0	87.0	88.0
45.0	35.6	46.0	76.0	99.0	38.0	49.0	81.0	80.0
50.0	32.8	41.8	71.0	92.0	35.2	45.0	76.0	73.0
55.0	30.2	38.6	66.0	85.0	32.6	42.0	72.0	67.0
60.0	28.0	36.0	62.0	79.0	30.4	39.4	67.0	61.0
65.0	26.2	33.8	58.0	72.0	28.6	37.0	63.0	56.0
70.0	24.6	32.0	55.0	66.0	26.8	35.0	60.0	52.0
75.0	22.6	30.2	51.0	61.0	25.0	33.2	57.0	48.0
80.0	20.6	28.6	48.0	55.0	23.2	31.4	54.0	45.0
85.0	19.4	27.2	46.0	51.0	20.8	30.0	51.0	41.0
90.0	18.4	25.8	42.6	46.0	19.4	28.6	48.0	38.4
95.0	17.4	24.8	40.2	42.4	18.4	27.4	44.0	36.2
100.0	16.6	23.4	38.2	37.2	17.4	26.2	40.8	34.0
105.0					16.4	25.2	37.6	32.0
110.0					15.6	24.2	34.8	30.2
115.0					14.8	23.4	30.4	28.0
SLI Code	2200							
Max. permitted windspeed	**14 m/s**		**11 m/s**	**9 m/s**	**12 m/s**		**9 m/s**	

Weights & Dimensions
European Version

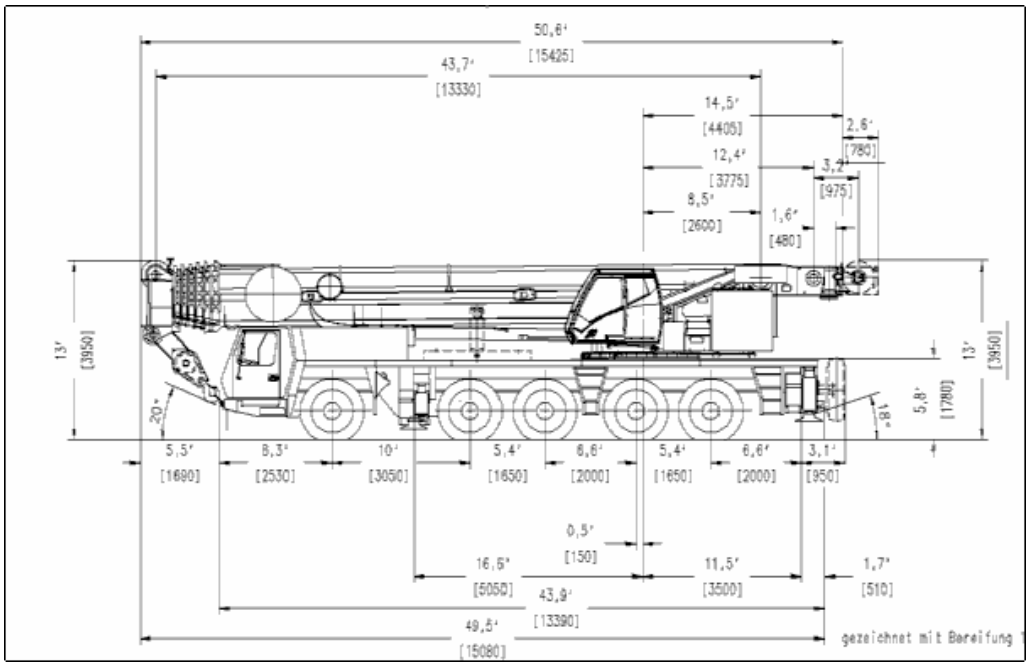

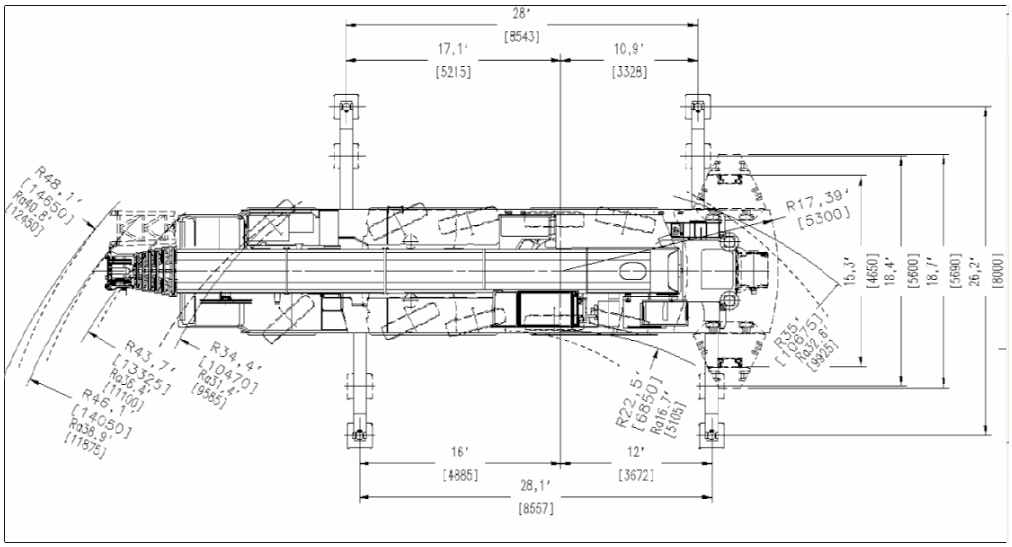

Width is 26'-6"
Center/Center
Rear Outriggers

Basic Weights - lb. (kg.)	Axles 1-3		Axles 4 & 5		Total	
Mercedes power, 14.00 tires, 10X6X10 drive/steer and driver.	74,810	(33934)	53,354	(24201)	128,164	(58135)
Additions:						
10X8X10 drive /steer	316	(316)	39	(39)	739	(355)
14.00R25 spare tire with bracket	-357	(-162)	941	(427)	584	(265)
16.00R25 spare tire with bracket	-439	(-199)	1,155	(524)	717	(325)
20.5R25 spare tire with bracket	-496	(-225)	1,305	(592)	809	(367)
Brackets and hose reel for swingaway	950	(431)	-355	(-161)	595	(270)
39 ft. - 69 ft. (12 m - 21 m) swingaway	5,117	(2321)	-686	(-311)	4,431	-2,010
Auxiliary hoist	-3,124	(-1417)	6,960	(3157)	3,836	(1740)
Substitutions						
16.00R25 tires	904	(410)	419	(190)	1,323	(600)
20.5R25 tires	1,534	(696)	714	(324)	2,249	(1020)
Remove:						
Boom assembly	-43,270	(-19627)	-3,369	(-1528)	-46,639	(-21155)
Front outriggers	-4,828	(-2190)	661	(300)	-4,167	(-1890)
Rear outriggers	2,950	(1338)	-8,109	(-3678)	-5,159	(-2340)
Front and rear outrigger floats	-130	(-59)	-311	(-141)	-441	(-200)

LS-248 HII load chart

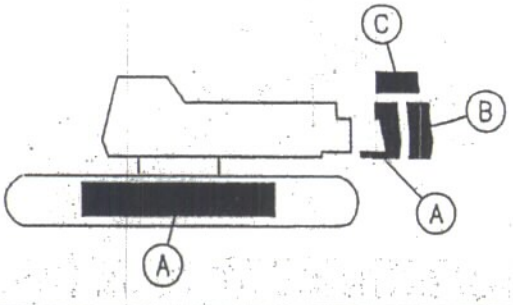

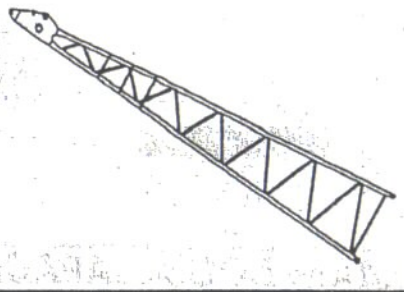

MAIN BOOM CAPACITIES – 160 FT OPEN THROAT TUBE BOOM

Load Radius (ft)	Boom Angle (deg)	360° Rotation					Over End Blocked	Load Radius (ft)
		ABC + A CTWT (lb)	ABC CTWT (lb)	AB CTWT (lb)	A CTWT (lb)	0 CTWT (lb)	ABC + A CTWT (lb)	
25.6	82.0	135,700	135,700	135,700	94,200	PROHIBITED	135,700	25.6
30	80.4	130,400	130,400	116,700	71,900		130,400	30
35	78.6	124,600	114,500	92,200	56,300		124,600	35
40	76.7	106,000	94,400	75,700	45,800		109,600	40
50	73.0	77,900	69,200	55,100	32,600		84,300	50
60	69.2	60,900	53,900	42,700	24,700		67,000	60
70	65.4	49,600	43,800	34,400	19,300		56,200	70
80	61.3	41,500	36,500	28,400	15,500		47,200	80
90	57.2	35,400	31,000	24,000	12,700		40,300	90
100	52.8	30,600	26,700	20,500	10,400		34,800	100
110	48.2	26,800	23,300	17,700	8,600		30,400	110
120	43.2	23,700	20,500	15,400	7,200		27,600	120
130	37.6	21,100	18,100	13,400	5,900		24,300	130
140	31.3	18,800	16,100	11,800	4,800		21,400	140
150	23.5	16,900	14,400	10,400	3,900		18,900	150
160	11.6	15,200	12,900	9,100	3,100		16,500	160

Note: Refer To Page 12 For "Capacity Deductions" Caused By Any Jib Attachment Or Tip Extension.

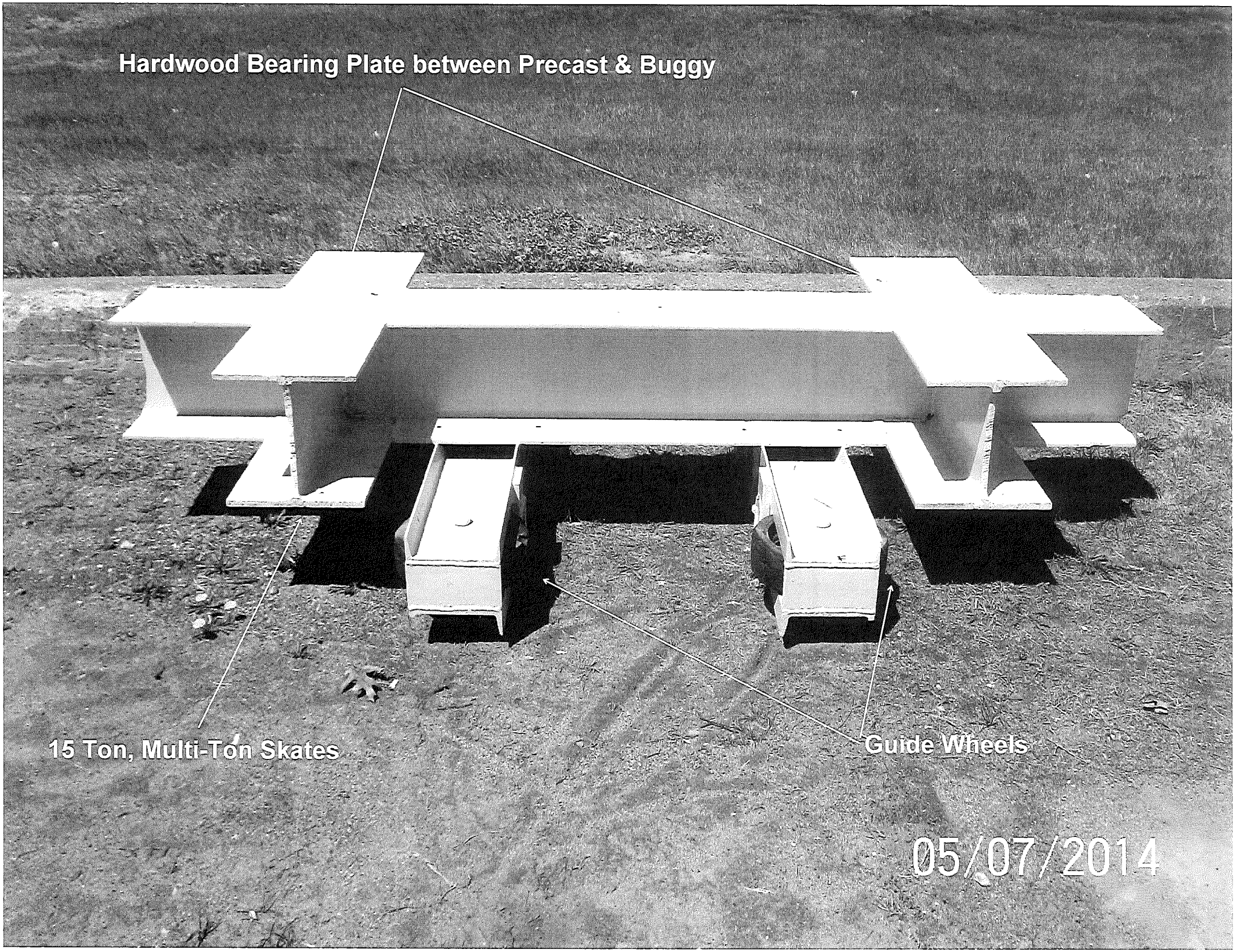
Hardwood Bearing Plate between Precast & Buggy
15 Ton, Multi-Ton Skates
Guide Wheels
05/07/2014

CALDERWOOD ENGINEERING ETC, LLC
222 RIVER ROAD
RICHMOND, ME 04357
PH. (207) 737-2007 FAX (207) 737-2008
www.calderwoodengineering.com

JOB BARNARD ER BRF 0241 (39)
SHEET NO. 1 OF 9
CALCULATED BY PJH DATE 2/14
CHECKED BY ETC DATE 4/14
SCALE

MAX. LOAD EXTERION NEXT BEAM

= 73.38 TONS = 146.760 KIPS

℄ BRG TO ℄ BRG = 85 ft

EXISTING STEEL GRADE ASSUME GRADE 33 KSI

SAY DOLLY WEIGHT = 500 lbs +/-

EXISTING STEEL = W36x231

USE AISC 13TH EDITION ASD DESIGN

$\Omega_{BENDING}$ = 1.67 (ASD)

Ω_{SHEAR} = 1.50 (ASD)

ϕ_b = 0.9 (LRFD)

ϕ_v = 1.0 (LRFD)

PROVIDE BRACING @ 10 ft CENTERS

l_b = 120 INCHES

W36x230 BEAM IS COMPACT BY DEFINITION

STATE OF VERMONT
ANDREW D. WHITE
NO. 9030
STRUCTURAL
LICENSED
PROFESSIONAL ENGINEER

July 2, 2014,
9 sheets of
calculations

CALDERWOOD ENGINEERING ETC LLC
222 RIVER ROAD
RICHMOND, ME 04357
PH. (207) 737-2007 FAX (207) 737-2008
www.calderwoodengineering.com

JOB BARNARD
SHEET NO. 2 OF 9
CALCULATED BY PJH DATE 2/14
CHECKED BY ETC DATE 4/14
SCALE

$L_p = 1.76\, r_y \sqrt{E/F_y}$ (F2-5 AISC 13TH)

$L_p = 1.76\,(3.71)\sqrt{29000/33} = 193.57$ IN

$L_b = 120$ IN $\leq L_p$ ∴ LATERAL TORSIONAL BUCKLING IS NOT AN ISSUE

& $M_n = M_p = F_y Z_x$

$M_n = 33$ KSI * 963 IN^3 = 31,779 K-IN

$M_A = \frac{M_n}{\Omega} = \frac{(31{,}779 \text{ K-IN})}{1.67} = 19{,}029.3$ K-IN

= 1585.8 K-FT

1/4 NEXT BM CARRIED BY EACH BEAM (1/2 CARRIED BY TRUCK, HALF BY SLIDING BEAM ASSEMBLY)

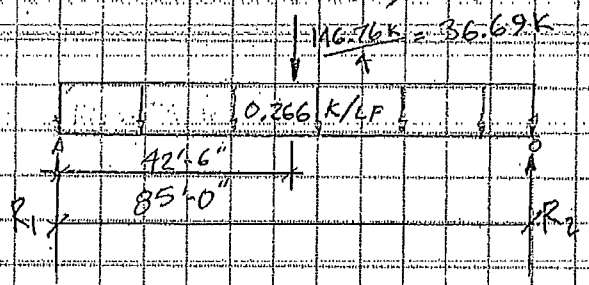

$\omega = 0.231$ K/FT * 1.15 = 0.266 KLF

$R_1 = R_2 = \frac{36.69\text{K} + 0.266 * 85'}{2}$

= 29.65 KIPS

CALDERWOOD ENGINEERING ETC, LLC
222 RIVER ROAD
RICHMOND, ME 04357
PH. (207) 737-2007 FAX (207) 737-2008
www.calderwoodengineering.com

JOB BARNARD
SHEET NO. 3 OF 9
CALCULATED BY PJH DATE 2/14
CHECKED BY ETC DATE 4/14
SCALE

$$M_u = \frac{29.65k + 29.65k - 42.5 * 0.266\,klf}{2} * 42.5\,ft = 1019.9\,k\text{-}ft$$

$M_{u\,(SVC\ LOAD)} = 1019.9$ K-FT

$M_{A\,(ASD)} = 1585.8$ K-FT

$M_R >> M_u$ ∴ O.K.

$V_u = 36.69k + 0.266 * 85\,ft/2 = 47.995$ KIPS
(WITH SLIDING SLED @ ℄ BRG EITHER END)

$V_n = 0.6\,F_y\,A_w\,C_v$ (G2-1)

$h/t_w = 36.5\,in / 0.76\,in = 48.03$

$2.24\sqrt{E/F_y} = 2.24 * \sqrt{29000/33} = 66.4$

$66.4 > 48.03$ ∴ $C_v = 1.0$

$V_n = 0.60\,(33\,ksi) * (36.5\,in) * (0.76\,in) * 1.0 = 549.25$ KIPS

$V_{u\,(SVC)} << V_A = \frac{549.25\,k}{1.5} = 366.2$ KIPS ∴ O.K.

CALDERWOOD ENGINEERING ETC, LLC
222 RIVER ROAD
RICHMOND, ME 04357
PH. (207) 737-2007 FAX (207) 737-2008
www.calderwoodengineering.com

JOB BARNARD
SHEET NO. 4 OF 9
CALCULATED BY PJH DATE 2/14
CHECKED BY ETC DATE 4/14
SCALE

✓ WEB LOCAL YIELDING (J10-3) J-2

SAY $N = k$

$R_N = (2.5k + N)(F_{yw})(t_w)$

$k = 2.21\,in$ ∴ $R_N = (2.5(2.21\,in) + 2.21\,in)(33\,ksi)(0.76\,in)$

$R_N = 193.99$ kips $\Omega = 1.5$

∴ $R_A = 193.99\,k / 1.5 = 129.33$ kips

$R_u = 48$ kips $<<$ R_A ∴ LOCAL WEB YIELDING OK

✓ WEB CRIPPLING (J10-4) J-3

USE $N = k = 2.21\,in$

$$R_N \text{ (@ END OF MEMBER)} = 0.4 t_w^2 \left[1 + 3\left(\frac{N}{d}\right)\left(\frac{t_w}{t_f}\right)^{1.5}\right]\sqrt{\frac{E F_{yw} t_f}{t_w}}$$

$$R_N = 0.4(0.76\,in)^2\left[1 + 3 * \left[\frac{2.21\,in}{36.5\,in} * \left(\frac{0.760\,in}{1.26\,in}\right)^{1.5}\right]\right]\sqrt{\frac{29000 * 33\,ksi * 1.26\,in}{0.76\,in}}$$

$R_N = 293.496$ kips $R_A = R_N / \Omega$ $\Omega = 2.00$

$R_A = 293.5\,k / 2.0 = 146.7$ kips $>>$ R_u ∴ OK

CALDERWOOD ENGINEERING ETC, LLC
222 RIVER ROAD
RICHMOND, ME 04357
PH. (207) 737-2007 FAX (207) 737-2008
www.calderwoodengineering.com

JOB BARNARD
SHEET NO. 5 OF 9
CALCULATED BY PJH DATE 2/14
CHECKED BY ETC DATE 4/14
SCALE

✓ SIDESWAY WEB BUCKLING J-4

$h/t_w = (36.5\,in - 2.21\,in * 2)/0.76\,in = 32.08$

$l/b_f = 120\,in/16.5\,in = 7.27$

$(h/t_w)/(l/b_f) = 32.08/7.27 = 4.41$

COMPRESSION FLANGE IS NOT RESTRAINED AGAINST ROTATION

$(h/t_w)/(l/b_f) = 4.41 \geq 1.7$ ∴ SIDESWAY WEB BUCKLING IS NOT A CONCERN

✓ BRACING FORCE REQ'D

RULE OF THUMB: 2% FORCE IN COMPRESSION FLANGE

APPENDIX D (C-A-6-4b)

$P_{br} = 0.01 * M_u (C_t) C_d / h_o = 0.01 * (1019.9\,k\text{-}ft) * 12''/ft\,(2.0)(2.0)/36.5''$

$C_t = 2.0 \quad C_d = 2.0$

$P_{br} = 13.41$ KIPS

AVE STRESS IN COMP. FLANGE $= \left[\frac{1019.9\,(12\,in/ft)}{85\,in^3} + \frac{1019.9\,(12) * 16.99\,in}{15600\,in^4}\right] * 1/2$

$= 13.83\,ksi \quad 2\%\,P_u = 0.02 * 13.83\,ksi * 1.26\,in * 16.5\,in = 5.75\,k$

USE 13.41 KIPS BRACING FORCE REQ'D

CALDERWOOD ENGINEERING ETC, LLC
222 RIVER ROAD
RICHMOND, ME 04357
PH. (207) 737-2007 FAX (207) 737-2008
www.calderwoodengineering.com

JOB BARNARD
SHEET NO. 6 OF 9
CALCULATED BY RJH DATE 2/14
CHECKED BY ETC DATE 4/14
SCALE

L_B REQ'D = 193.57 IN
L_B PROV = 120 IN

BRACING FORCE MAY BE REDUCED TO ACCOUNT FOR CLOSER SPACING PROVIDED.

∴ BRACING FORCE REQ'D @ 120 IN

= 13.41 KIPS * 120 IN / 193.57 IN = 8.3133 K / X-FRAME

SPACING OF GIRDERS = SPACING OF STEMS OF NEXT BM = 5'-0"

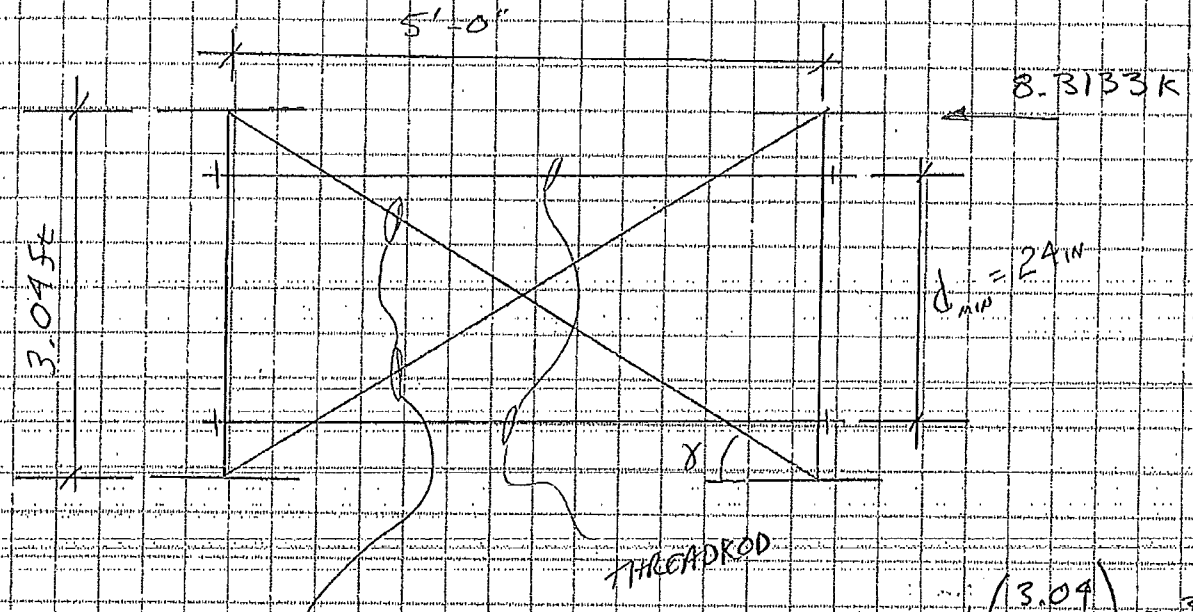

$\gamma = \tan^{-1}\left(\frac{3.04}{5.0}\right) = 31.3°$

CALDERWOOD ENGINEERING ETC, LLC
222 RIVER ROAD
RICHMOND, ME 04357
PH. (207) 737-2007 FAX (207) 737-2008
www.calderwoodengineering.com

JOB BARNARD
SHEET NO. 7 OF 9
CALCULATED BY PJH DATE 2/14
CHECKED BY ETC DATE 4/14
SCALE

P_u IN BRACING = 8,313.3 lbs * 1/cos 31.3° = 9,730 lbs

$F_{c\parallel} = 9730 \text{ lbs} / (4 \text{ in} * 6 \text{ in}) = 405.4 \text{ psi}$

$l_e = \sqrt{(3.04)^2 + (5)^2} = 5.852 \text{ ft} = 70.22 \text{ in}$

$F'_{c\parallel} = 1000 \text{ psi}$ (NDS - ASD 2005)

$C_F = 1.1$ $C_D = 1.0$ (FOR CONSERVATISM)

$C_M = 0.80$

$F^*_c = 1000 \text{ psi} * 1.1 * 0.80 * 1.0 = 880 \text{ psi}$

$l_e/d = 70.22 \text{ in} / 4 \text{ in} = 17.56$

$$F_{cE} = \frac{0.822 \, E_{min}}{(l_e/d)^2} = \frac{0.822 * 400{,}000 \text{ psi}}{(17.56)^2} = 1066 \text{ psi}$$

$c = 0.80$ FOR SAWN LUMBER

$$\frac{1 + F_{cE}/F^*_c}{2c} = 1.3821 \qquad \frac{F_{cE}/F^*_c}{c} = 1.5142$$

CALDERWOOD ENGINEERING ETC, LLC
222 RIVER ROAD
RICHMOND, ME 04357
PH. (207) 737-2007 FAX (207) 737-2008
www.calderwoodengineering.com

JOB: BARNARD
SHEET NO. 8 OF 9
CALCULATED BY: PJH DATE: 2/14
CHECKED BY: ETC DATE: 4/14
SCALE:

$$C_P = \frac{1 + F_{CE}/F_C^*}{2c} - \sqrt{\left(\frac{1 + F_{CE}/F_C^*}{2c}\right)^2 - \frac{F_{CE}/F_C^*}{c}} \quad (3.7\text{-}1)$$

$$C_P = 1.3821 - \sqrt{(1.3821)^2 - 1.5142} = 0.7528$$

$$\therefore F'_{CII} = C_P F_C^* = 0.7528 * 880\,psi = 662.5\,psi$$

$$P_{ALLOWABLE} = 662.5 * 4\,in * 6\,in = 15{,}900\,lbs$$

$$15{,}900\,lbs \geq 9{,}730\,lbs \quad \therefore \text{OK.}$$

THREADROD MUST BE CAPABLE OF RESISTING

$$8{,}313.3\,lbs * \frac{36.5 - 6.25\,in}{24\,in} = 10{,}251.35\,lbs$$

$$P_{T\,ALL} \geq 10.25\,kips$$

$\Omega_t = 1.67$ (YIELD) $P_n = F_y A_g$ $P_n = \frac{F_y A_g}{1.67}$

USING A36 THREADROD 7/8" ϕ $A_g = 0.60\,in^2$

$$P_{ALL} = \frac{36\,ksi * 0.60\,in^2}{1.67} = 12.96\,kips$$

✓ RUPTURE $F_u = 58\,ksi$ $A_e = 0.429\,in^2$ (UNC THREADS)

$\Omega_t = 2.00$ (FOR RUPTURE)

$$P_{ALL} = \frac{58\,ksi * 0.429\,in^2}{2.0} = 12.41\,kips \quad \text{(GOVERNS)}$$

CALDERWOOD ENGINEERING ETC LLC
222 RIVER ROAD
RICHMOND, ME 04357
PH. (207) 737-2007 FAX (207) 737-2008
www.calderwoodengineering.com

JOB BARNARD
SHEET NO. 9 OF 9
CALCULATED BY PJW DATE 2/14
CHECKED BY ETC DATE 4/14
SCALE

12.44 KIPS ≥ 10.25 KIPS ∴ O.K.

✓ CONCRETE BEARING STRESS $f'_c = 5{,}000$ psi

USE 12 x 18 PL

MAX REACTION = 48 K / (12 x 18) = 0.222 ksi

= 222 psi

ALLOWABLE BEARING PRESSURE ON CONCRETE

PER AASHTO 17TH EDITION ASD

= 0.3 f'_c = 0.3 * 5,000 psi = 1500 psi ALLOWED

222 psi << 1500 psi ∴ O.K.

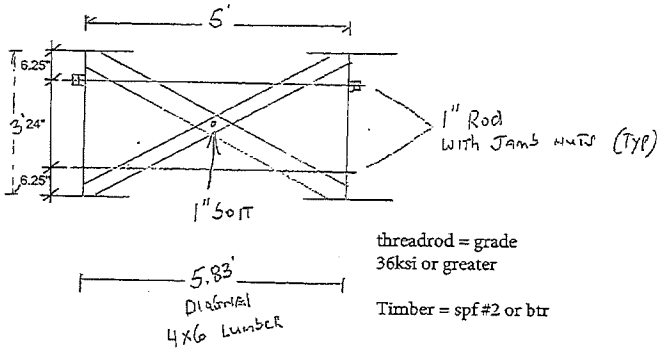

threadrod = grade
36ksi or greater

Timber = spf #2 or btr

20 - 1" flat washers (Extras)
65 - 1" nuts (Extras)
20 - 1"x6" Threaded Rod (Extras)
20 - 4"x6"x6' for Diag bracing (extras)
10 - 1"x12" bolts/nuts (Extras)

Girder wt: 19,780 ea +-

July 1, 2014

STATE OF VERMONT
ANDREW D. WHITE
NO. 9030
STRUCTURAL
LICENSED
PROFESSIONAL ENGINEER

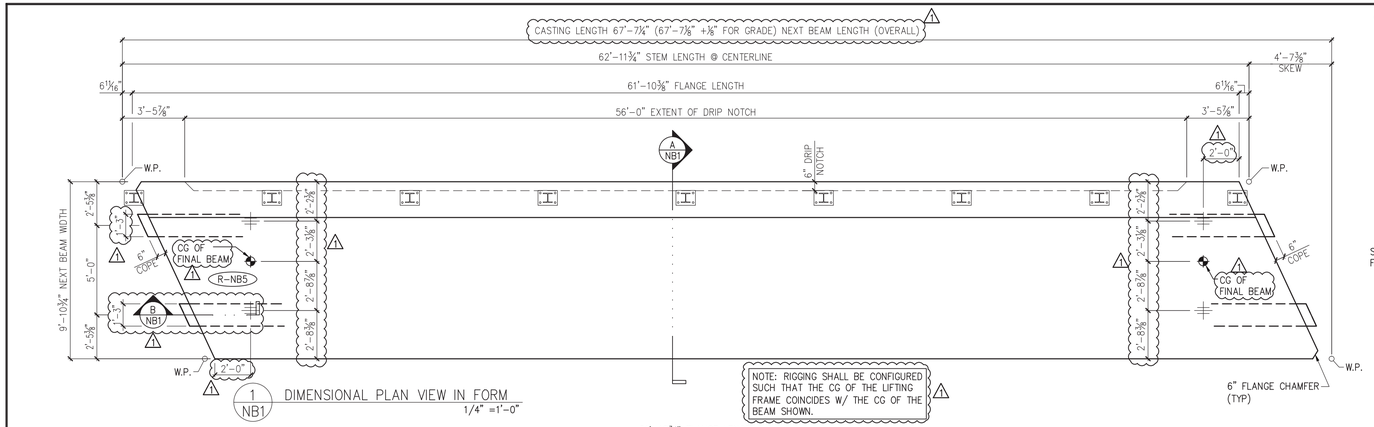

1 NB1 DIMENSIONAL PLAN VIEW IN FORM 1/4" =1'-0"

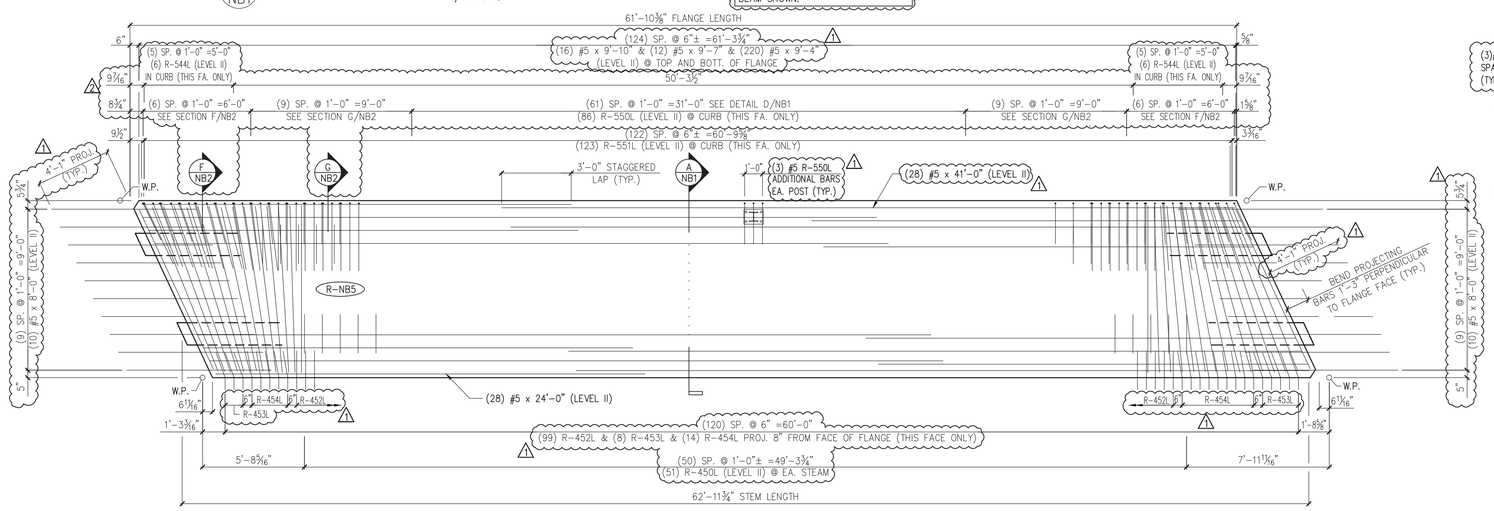

2 NB1 REINFORCING PLAN VIEW IN FORM 1/4" =1'-0"
ALL DIMENSIONS INDICATED ARE PARALLEL OR PERPENDICULAR TO ℄ OF STEMS U.N.O.

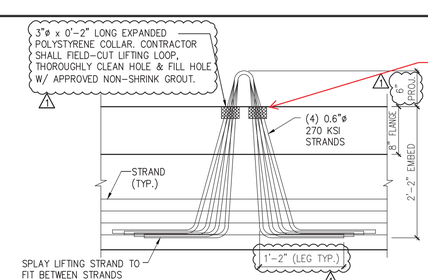

Revise as required per contract plans for clear cover, per A/NB1. Add note that states field cut point to match clear cover. Add note to specify epoxy paint cut ends.

TYPICAL LIFTING AND HANDING DETAIL
SCALE: 1" =1'-0"
NOTE: OTHER REINF. NOT SHOWN FOR CLARITY.

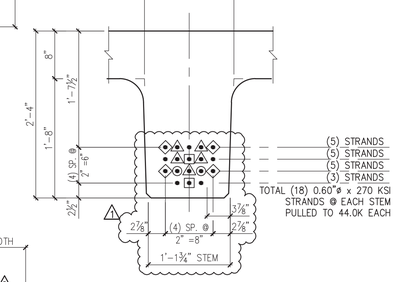

DETAIL – "C" (STEM STRAND PATTERN)
1" =1'-0"

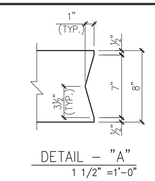

DETAIL – "A"
1 1/2" =1'-0"

PRESTRESSING NOTATIONS

- ● DENOTES STRAIGHT STRANDS TO BE CUT FLUSH WITH EA. END OF EA. STEM
- ◇ DENOTES STRAIGHT STRANDS TO PROJECT 1'-6" FROM EA. END OF EA. STEM
- △ DENOTES STRAIGHT STRANDS TO BE DEBONDED 6" FROM EA. END OF EA. STEM
- ▣ DENOTES STRAIGHT STRANDS TO BE DEBONDED 8'-0" FROM EA. END OF EA. STEM
- ⊙ DENOTES STRAIGHT STRANDS TO BE DEBONDED 12'-0" FROM EA. END OF EA. STEM

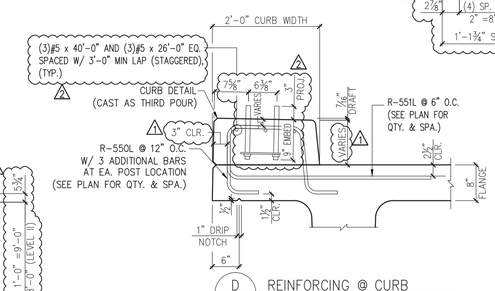

D NB1 REINFORCING @ CURB
OTHER BEAM REINF. NOT SHOWN FOR CLARITY 3/4" =1'-0"

DETENSIONING SCHEDULE
N.T.S.

Vermont Agency of Transportation
RECEIVED
ON: May 9, 2014
and Checked for
CONFORMANCE
BY: Jennifer Fitch DATE: 05/16/2014

MARK: R-NB5	QTY.: 1	WT.: 49.3 T	VOL.: 24.33 cy
TOTAL WITH CURTAIN WALLS & CURB –	WT.: 67.5 T	VOL.: 33.4 cy	

MATERIAL LIST / NEXT BEAM

ITEM	MARK	DESCRIPTION	QTY.
1	~~R-450L~~	~~#4 BENT BAR (LEVEL II, DUAL COATED)~~	~~146~~
2	R-451L	#4 BENT BAR (LEVEL II, DUAL COATED)	8
3	R-452L	#4 BENT BAR (LEVEL II, DUAL COATED)	99
4	R-453L	#4 BENT BAR (LEVEL II, DUAL COATED)	8
5	R-454L	#4 BENT BAR (LEVEL II, DUAL COATED)	14
6			
7	R-544L	#5 BENT BAR (LEVEL II, DUAL COATED)	12
8	R-550L	#5 BENT BAR (LEVEL II, DUAL COATED)	89
9	R-551L	#5 BENT BAR (LEVEL II, DUAL COATED)	123
10	R-552L	#5 BENT BAR (LEVEL II, DUAL COATED)	16
11			
12		#4 x 9'-10" (LEVEL II, DUAL COATED)	18
13			
14		#5 x 8-0" (LEVEL II, DUAL COATED)	20
15		#5 x 9'-4" (LEVEL II, DUAL COATED)	220
16		#5 x 9'-7" (LEVEL II, DUAL COATED)	12
17		#5 x 9'-10" (LEVEL II, DUAL COATED)	20
18		#5 x 24'-0" (LEVEL II, DUAL COATED)	28
19		#5 x 26'-0" (LEVEL II, DUAL COATED)	6
20		#5 x 40'-0" (LEVEL II, DUAL COATED)	6
21		#5 x 41'-0" (LEVEL II, DUAL COATED)	28
22			
23		SET OF (4) 0.60"ø x 270 KSI STRAND LIFTING LOOPS	4

Confirm quantity include extra 3 at each post location, per D/NB1

Verify quantity with D/NB1

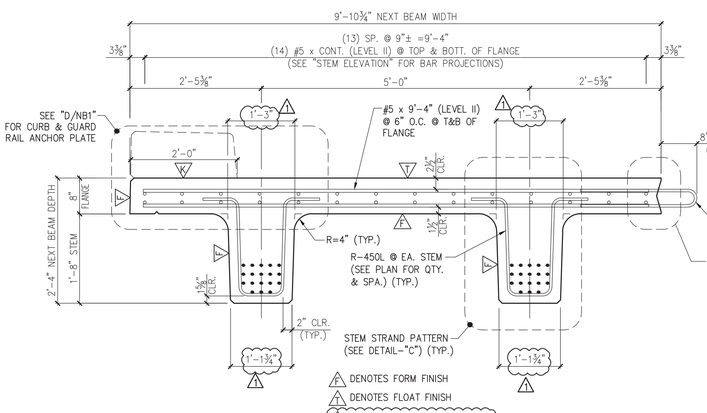

A NB1 DIMENSIONAL & REINFORCING SECTION 3/4" =1'-0"

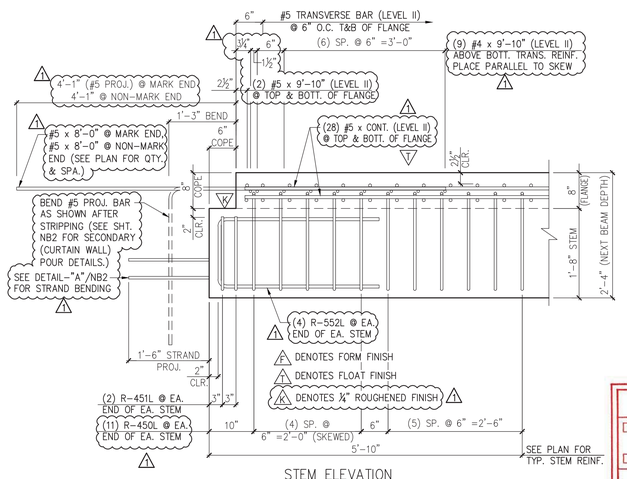

STEM ELEVATION

B NB1 END BLOCK STEM REINFORCING DETAILS 3/4" =1'-0"

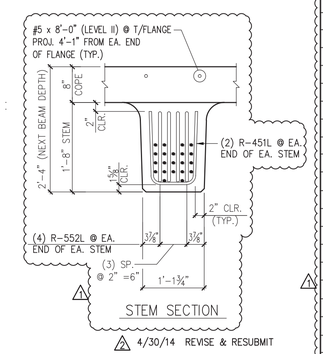

STEM SECTION

△ 4/30/14 REVISE & RESUBMIT
△ 4/11/14 REVISE & RESUBMIT

SHOP DRAWING REVIEW

☐ REVIEWED AS REQUIRED BY THE CONSTRUCTION CONTRACT DOCUMENTS AND APPROVED, BUT ONLY FOR CONFORMANCE TO THE DESIGN CONCEPT OF THE WORK, AND SUBJECT TO FURTHER LIMITATIONS AND REQUIREMENTS CONTAINED IN THE CONSTRUCTION CONTRACT DOCUMENTS.
☐ REJECTED ☒ REVISE AND RESUBMIT ☐ FURNISH AS CORRECTED

CORRECTIONS OR COMMENTS MADE ON THE SHOP DRAWINGS DURING THIS REVIEW DO NOT RELIEVE CONTRACTOR FROM COMPLIANCE WITH REQUIREMENTS OF THE DRAWINGS AND SPECIFICATIONS. THIS CHECK IS ONLY FOR REVIEW OF GENERAL CONFORMANCE WITH THE DESIGN CONCEPT OF THE PROJECT AND GENERAL COMPLIANCE WITH THE INFORMATION GIVEN IN THE CONTRACT DOCUMENTS. THE CONTRACTOR IS RESPONSIBLE FOR: CONFIRMING AND CORRELATING ALL QUANTITIES AND DIMENSIONS; SELECTING FABRICATION PROCESSES AND TECHNIQUES OF CONSTRUCTION; COORDINATING HIS WORK WITH THAT OF ALL OTHER TRADES; AND PERFORMING HIS WORK IN A SAFE AND SATISFACTORY MANNER.

VHB Vanasse Hangen Brustlin, Inc.
7056 US Route 7
North Ferrisburgh, VT 05473
802.425.7788
Job Number: 57527
Reviewed By: LJ. WESTCOTT
Date: 5/16/2014

Eriksson technologies 813.989.3317 TAMPA, FL
© 2014 ERIKSSON TECHNOLOGIES

P. CARRARA & SONS INC.
Precast & Prestress Manufacturer
STR., MIDDLEBURY, VERMONT 05753 Phone:(802)388-6361 Fax:(802)388-9010

W.M. SCHULTZ CONSTRUCTION, INC.
PO BOX 2620
BALLSTON SPA, NY 12020

STATE OF VERMONT AGENCY OF TRANSPORTATION
COUNTY OF WINDSOR

TOWN OF ROCHESTER
VT ROUTE 73 (RURAL MAJOR COLLECTOR)
BRIDGE NO.: 16 PROJECT NO.: BRF 0162 (17)

DATE:	MAR. 14, 2014
SCALE:	NOTED
CHKD:	DFTM: AAT/RWS JLJ/KLT
JOB NO:	23419-013
DWG. NO:	NB1

S:\Engineering Services\Carrara\14002 Rochester BR 15 & 16\Production Drawings\AutoCAD Files\Bridge 16\BR-16 - R-NB1.dwg

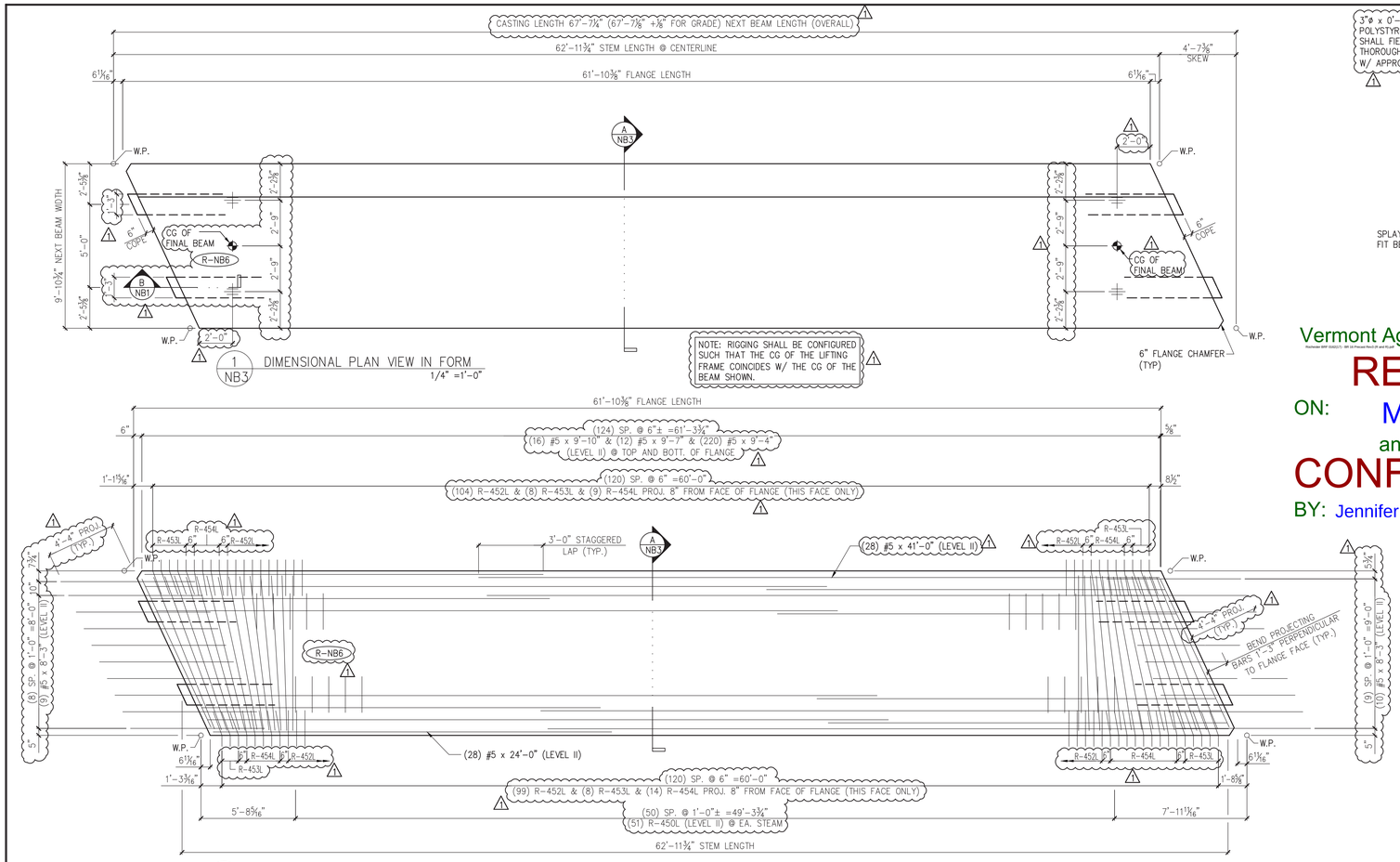

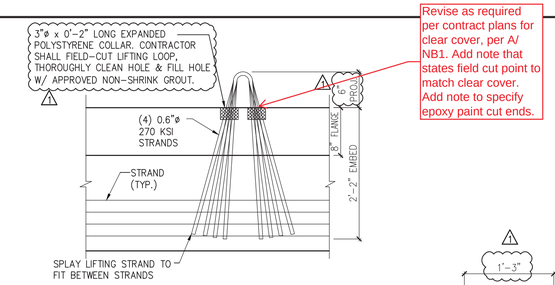

Revise as required per contract plans for clear cover, per A/NB1. Add note that states field cut point to match clear cover. Add note to specify epoxy paint cut ends.

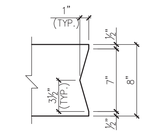

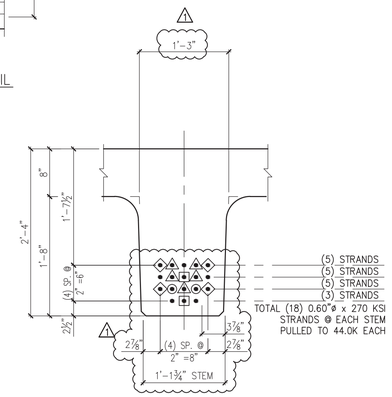

PRESTRESSING NOTATIONS

- DENOTES STRAIGHT STRANDS TO BE CUT FLUSH WITH EA. END OF EA. STEM
- DENOTES STRAIGHT STRANDS TO PROJECT 1'-6" FROM EA. END OF EA. STEM
- DENOTES STRAIGHT STRANDS TO BE DEBONDED 6" FROM EA. END OF EA. STEM
- DENOTES STRAIGHT STRANDS TO BE DEBONDED 8'-0" FROM EA. END OF EA. STEM
- DENOTES STRAIGHT STRANDS TO BE DEBONDED 12'-0" FROM EA. END OF EA. STEM

Vermont Agency of Transportation

Rochester BRF 0162(17) - BR 15 Precast Rec'd UP and RLUP

RECEIVED

ON: May 9, 2014

and Checked for

CONFORMANCE

BY: Jennifer Fitch DATE: 05/16/2014

SHOP DRAWING REVIEW

☐ REVIEWED AS REQUIRED BY THE CONSTRUCTION CONTRACT DOCUMENTS AND APPROVED, BUT ONLY FOR CONFORMANCE TO THE DESIGN CONCEPT OF THE WORK, AND SUBJECT TO FURTHER LIMITATIONS AND REQUIREMENTS CONTAINED IN THE CONSTRUCTION CONTRACT DOCUMENTS.

☐ REJECTED ☒ REVISE AND RESUBMIT ☐ FURNISH AS CORRECTED

CORRECTIONS OR COMMENTS MADE ON THE SHOP DRAWINGS DURING THIS REVIEW DO NOT RELIEVE CONTRACTOR FROM COMPLIANCE WITH REQUIREMENTS OF THE DRAWINGS AND SPECIFICATIONS. THIS CHECK IS ONLY FOR REVIEW OF GENERAL CONFORMANCE WITH THE DESIGN CONCEPT OF THE PROJECT AND GENERAL COMPLIANCE WITH THE INFORMATION GIVEN IN THE CONTRACT DOCUMENTS. THE CONTRACTOR IS RESPONSIBLE FOR: CONFIRMING AND CORRELATING ALL QUANTITIES AND DIMENSIONS; SELECTING FABRICATION PROCESSES AND TECHNIQUES OF CONSTRUCTION; COORDINATING HIS WORK WITH THAT OF ALL OTHER TRADES; AND PERFORMING HIS WORK IN A SAFE AND SATISFACTORY MANNER.

VHB *Vanasse Hangen Brustlin, Inc.* 7056 US Route 7 North Ferrisburgh, VT 05473 802.425.7788

Job Number: 57527
Reviewed By: LJ. WESTCOTT
Date: 5/16/2014

DETENSIONING SCHEDULE
N.T.S.

MARK:	R–NB6	QTY.:	1	WT.: △1	49.3 T	VOL.:	24.33 cy
TOTAL WITH CURTAIN WALLS –				WT.:	29.91 T	VOL.:	29.54 cy

MATERIAL LIST / NEXT BEAM

ITEM	MARK	DESCRIPTION	QTY.
1	R–450L	#4 BENT BAR (LEVEL II, DUAL COATED)	146
2	R–451L	#4 BENT BAR (LEVEL II, DUAL COATED)	8
3	R–452L	#4 BENT BAR (LEVEL II, DUAL COATED)	203
4	R–453L	#4 BENT BAR (LEVEL II, DUAL COATED)	16
5	R–454L	#4 BENT BAR (LEVEL II, DUAL COATED)	23
6			
7	R–552L	#5 BENT BAR (LEVEL II, DUAL COATED)	16
8			
9		#4 x 9'–10" (LEVEL II, DUAL COATED)	18
10		#5 x 8'–0" (LEVEL II, DUAL COATED)	20
11		#5 x 9'–4" (LEVEL II, DUAL COATED)	220
12		#5 x 9'–7" (LEVEL II, DUAL COATED)	12
13		#5 x 9'–10" (LEVEL II, DUAL COATED)	20
14		#5 x 24–0" (LEVEL II, DUAL COATED)	28
15		#5 x 41'–0" (LEVEL II, DUAL COATED)	28
16			
17			
18		SET OF (4) 0.60"ø x 270 KSI STRAND LIFTING LOOPS	4

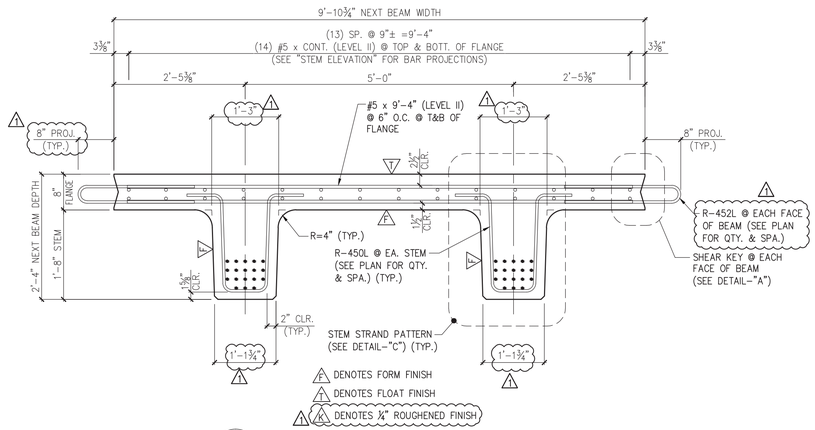

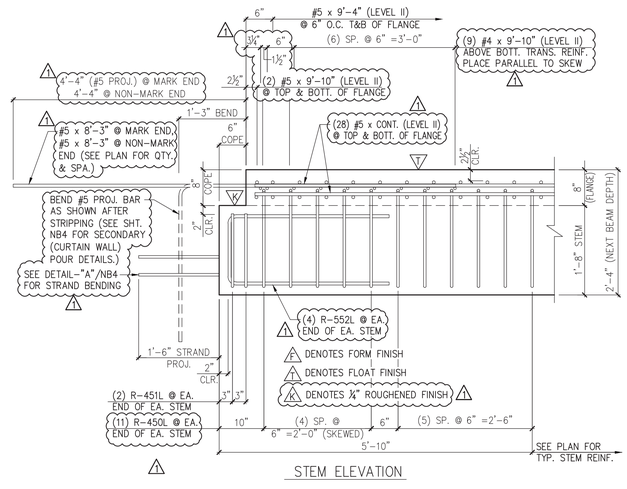

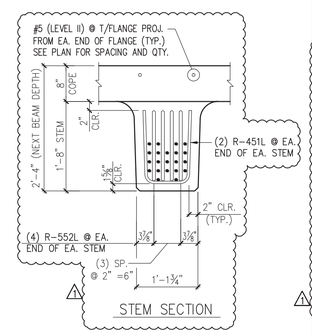

△1 4/11/14 REVISE & RESUBMIT

APPROVAL STAMP:

Eriksson technologies 813.989.3317 TAMPA, FL LRFD.COM

© 2014 ERIKSSON TECHNOLOGIES, INC. ALL RIGHTS RESERVED

J.P. CARRARA & SONS INC.
Precast & Prestress Manufacturer
2464 CASE STR., MIDDLEBURY, VERMONT 05753 Phone:(802)388-6361 Fax:(802)388-9010

W.M. SCHULTZ CONSTRUCTION, INC.
PO BOX 2620
BALLSTON SPA, NY 12020

STATE OF VERMONT AGENCY OF TRANSPORTATION
COUNTY OF WINDSOR

TOWN OF ROCHESTER
VT ROUTE 73 (RURAL MAJOR COLLECTOR)
BRIDGE NO.: 16 PROJECT NO.: BRF 0162 (17)

DATE: MAR. 14, 2014
SCALE: NOTED
CHKD: DFTM: AAT/RWS JJ/KLT
JOB NO: 23419–013
DWG. NO: NB3

S:\Engineering Services\Carrara\14002 Rochester BR 15 & 16\Production Drawings\AutoCAD Files\Bridge 16\BR.16 - R-NB2.dwg

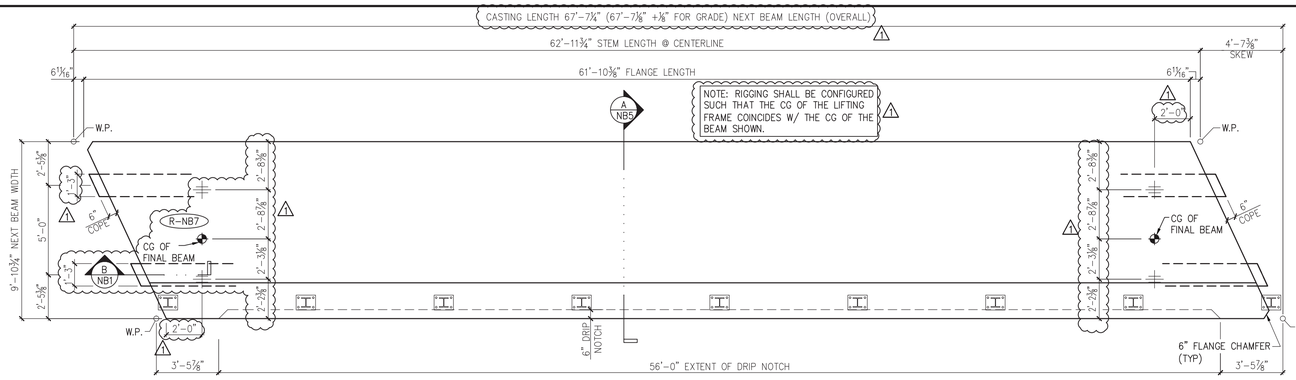

1 NB5 DIMENSIONAL PLAN VIEW IN FORM
1/4" =1'-0"

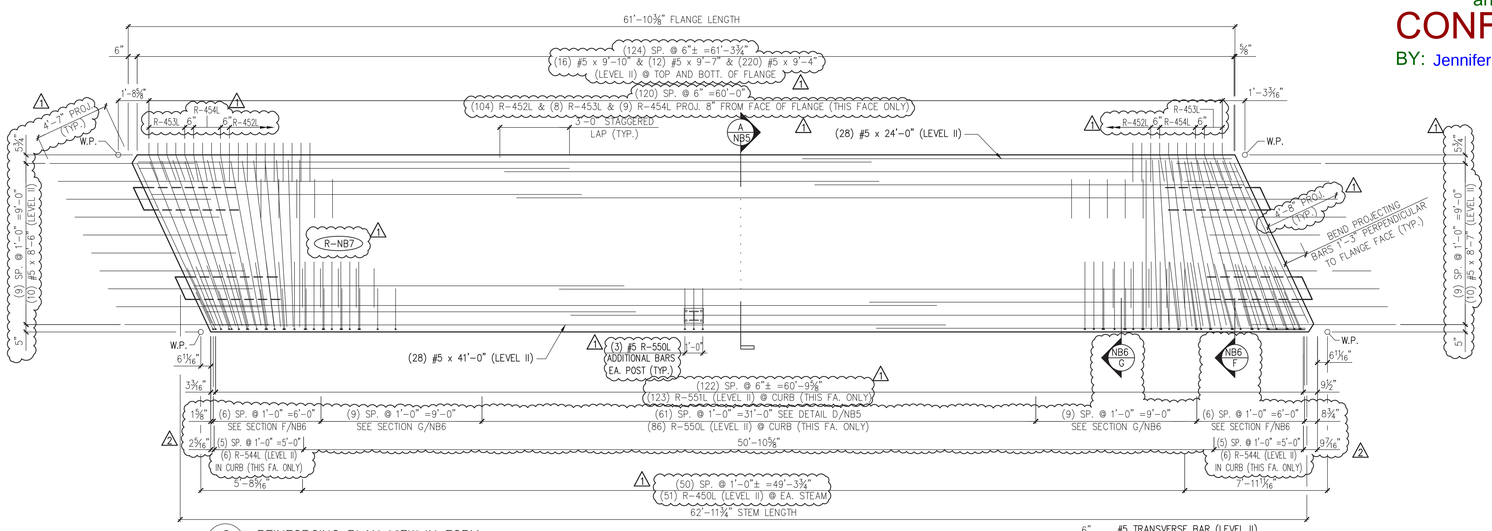

2 NB5 REINFORCING PLAN VIEW IN FORM
1/4" =1'-0"
ALL DIMENSIONS INDICATED ARE PARALLEL OR PERPENDICULAR TO ℄ OF STEMS U.N.O.

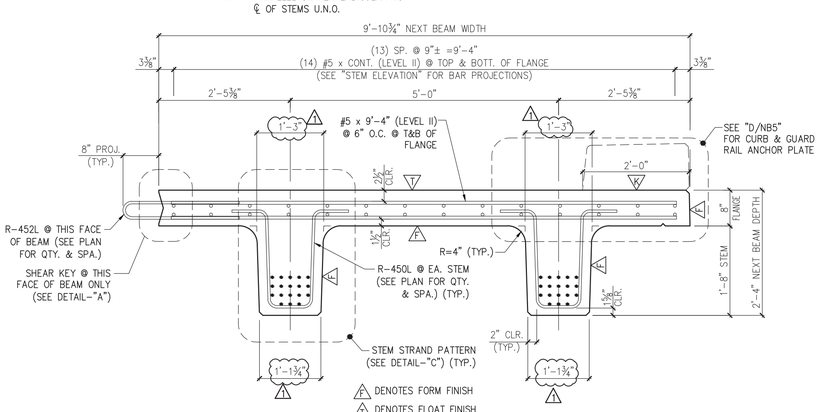

A NB5 DIMENSIONAL & REINFORCING SECTION
3/4" =1'-0"

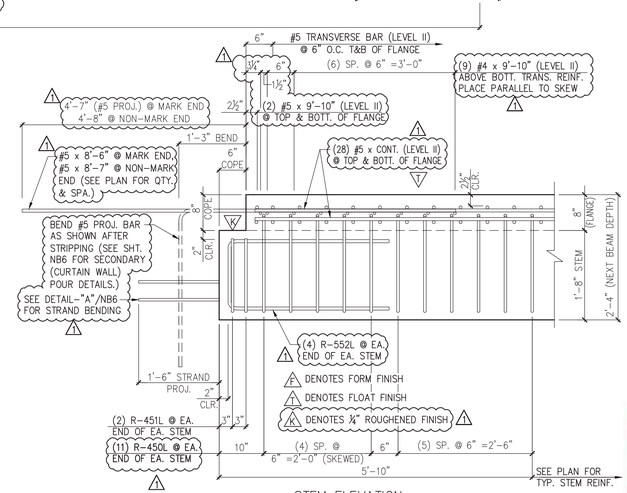

STEM ELEVATION

B NB5 END BLOCK STEM REINFORCING DETAILS
3/4" =1'-0"

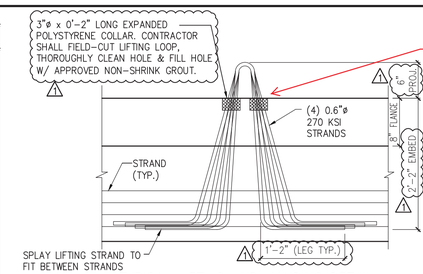

TYPICAL LIFTING AND HANDING DETAIL
SCALE: 1" =1'-0"
NOTE: OTHER REINF. NOT SHOWN FOR CLARITY.

Revise as required per contract plans for clear cover, per A/NB1. Add note that states field cut point to match clear cover. Add note to specify epoxy paint cut ends.

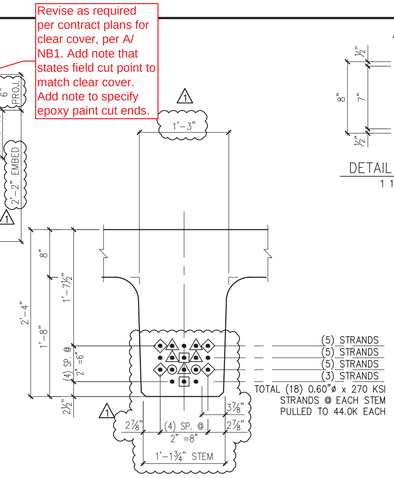

DETAIL – "C" (STEM STRAND PATTERN)
1" =1'-0"

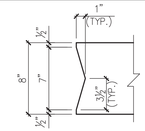

DETAIL – "A"
1 1/2" =1'-0"

PRESTRESSING NOTATIONS

- DENOTES STRAIGHT STRANDS TO BE CUT FLUSH WITH EA. END OF EA. STEM
- DENOTES STRAIGHT STRANDS TO PROJECT 1'-6" FROM EA. END OF EA. STEM
- DENOTES STRAIGHT STRANDS TO BE DEBONDED 6" FROM EA. END OF EA. STEM
- DENOTES STRAIGHT STRANDS TO BE DEBONDED 8'-0" FROM EA. END OF EA. STEM
- DENOTES STRAIGHT STRANDS TO BE DEBONDED 12'-0" FROM EA. END OF EA. STEM

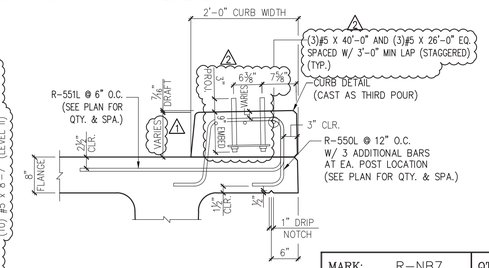

D NB5 REINFORCING @ CURB
OTHER BEAM REINF. NOT SHOWN FOR CLARITY
3/4" =1'-0"

DETENSIONING SCHEDULE
N.T.S.

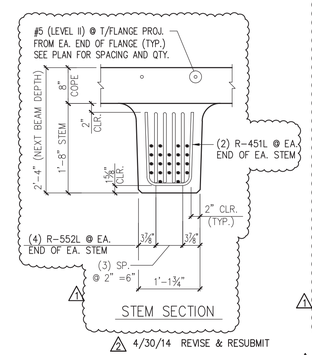

4/30/14 REVISE & RESUBMIT
4/11/14 REVISE & RESUBMIT

Vermont Agency of Transportation
RECEIVED
ON: May 9, 2014
and Checked for
CONFORMANCE
BY: Jennifer Fitch DATE: 05/16/2014

MARK:	R-NB7	QTY.:	1	WT.:	49.3 T	VOL.:	24.33 cy
TOTAL WITH CURTAIN WALLS & CURB –				WT.:	69.2 T	VOL.:	34.16 cy

MATERIAL LIST / NEXT BEAM

ITEM	MARK	DESCRIPTION	QTY.
1	R-450L	#4 BENT BAR (LEVEL II, DUAL COATED)	146
2	R-451L	#4 BENT BAR (LEVEL II, DUAL COATED)	8
3	R-452L	#4 BENT BAR (LEVEL II, DUAL COATED)	104
4	R-453L	#4 BENT BAR (LEVEL II, DUAL COATED)	8
5	R-454L	#4 BENT BAR (LEVEL II, DUAL COATED)	9
6			
7	R-544L	#5 BENT BAR (LEVEL II, DUAL COATED)	12
8	R-550L	#5 BENT BAR (LEVEL II, DUAL COATED)	89
9	R-551L	#5 BENT BAR (LEVEL II, DUAL COATED)	123
10	R-552L	#5 BENT BAR (LEVEL II, DUAL COATED)	16
11			
12		#4 x 9'-10" (LEVEL II, DUAL COATED)	18
13			
14			
15		#5 x 8'-6" (LEVEL II, DUAL COATED)	10
16		#5 x 8'-7" (LEVEL II, DUAL COATED)	10
17		#5 x 9'-4" (LEVEL II, DUAL COATED)	220
18		#5 x 9'-7" (LEVEL II, DUAL COATED)	12
19		#5 x 9'-10" (LEVEL II, DUAL COATED)	20
20		#5 x 24'-0" (LEVEL II, DUAL COATED)	28
21		#5 x 26'-0" (LEVEL II, DUAL COATED)	3
22		#5 x 40'-0" (LEVEL II, DUAL COATED)	3
23		#5 x 41'-0" (LEVEL II, DUAL COATED)	28
24			
25		SET OF (4) 0.60"ø x 270 KSI STRAND LIFTING LOOPS	4

Revise accordingly

SHOP DRAWING REVIEW

☐ REVIEWED AS REQUIRED BY THE CONSTRUCTION CONTRACT DOCUMENTS AND APPROVED, BUT ONLY FOR CONFORMANCE TO THE DESIGN CONCEPT OF THE WORK, AND SUBJECT TO FURTHER LIMITATIONS AND REQUIREMENTS CONTAINED IN THE CONSTRUCTION CONTRACT DOCUMENTS.
☐ REJECTED ☒ REVISE AND RESUBMIT ☐ FURNISH AS CORRECTED

CORRECTIONS OR COMMENTS MADE ON THE SHOP DRAWINGS DURING THIS REVIEW DO NOT RELIEVE CONTRACTOR FROM COMPLIANCE WITH REQUIREMENTS OF THE DRAWINGS AND SPECIFICATIONS. THIS CHECK IS ONLY FOR REVIEW OF GENERAL CONFORMANCE WITH THE DESIGN CONCEPT OF THE PROJECT AND GENERAL COMPLIANCE WITH THE INFORMATION GIVEN IN THE CONTRACT DOCUMENTS. THE CONTRACTOR IS RESPONSIBLE FOR, CONFIRMING AND CORRELATING ALL QUANTITIES AND DIMENSIONS; SELECTING FABRICATION PROCESSES AND TECHNIQUES OF CONSTRUCTION; COORDINATING HIS WORK WITH THAT OF ALL OTHER TRADES; AND PERFORMING HIS WORK IN A SAFE AND SATISFACTORY MANNER.

VHB Vanasse Hangen Brustlin, Inc.
7056 US Route 7
North Ferrisburgh, VT 05473
802.425.2788
Job Number: 57527
Reviewed by: LJ. WESTCOTT
Date: 5/16/2014

Eriksson technologies
813.989.3317
TAMPA, FL
© 2014 ERIKSSON TECHNOLOGIES

CARRARA & SONS INC.
Precast & Prestress Manufacturer
MIDDLEBURY, VERMONT 05753 Phone:(802)388-6361 Fax:(802)388-9010

W.M. SCHULTZ CONSTRUCTION, INC.
PO BOX 2620
BALLSTON SPA, NY 12020

STATE OF VERMONT AGENCY OF TRANSPORTATION
COUNTY OF WINDSOR

TOWN OF ROCHESTER
VT ROUTE 73 (RURAL MAJOR COLLECTOR)
BRIDGE NO.: 16 PROJECT NO.: BRF 0162 (17)

DATE: MAR. 14, 2014
SCALE: NOTED
CHKD: DFTM: AAT/RWS JJ/KLT
JOB NO: 23419-013
DWG. NO: NB5

S:\Engineering Services\Carrara\14002 Rochester BR 15 & 16\Production Drawings\AutoCAD Files\Bridge 16\BR 16 - R-NB3.dwg