CCS Constructors Inc.

Supply & Erect Structural Steel and Precast
Crane Service Rigging Pile Driving Heavy Hauling

Erection Plan for Precast Concrete Abutments
Rochester, VT
ER BRF 0162(17)
Bridge 16

July 22, 2014

Revised

General Requirements:

The erection shall not be performed during windy or heavy rain conditions. This submittal covers the erection of the precast abutments, wing walls, and approach slabs on the above project. Erection of the NEXT BEAMS is submitted separately.

A Link Belt **238 HSL** (150-ton) crawler crane and Grove **GMK 5275** hydraulic truck crane will be used for the erection. The **238 HSL** is to be outfitted with ABC+A (all) of manufacturer's supplied counterweights, and the **GMK 5275** is to be outfitted with 112,400 lbs. of manufacturer's supplied counterweights. Alternatively, a Link Belt **LS-248 H2** (200-ton) crawler crane outfitted with ABC counterweights may be used instead of the **GMK 5275** crane.

The sub-base beneath the cranes shall be firmly compacted structural backfill. Sub-base beneath all precast units shall be according to the project plans and specifications.

Abutment 2 (east abutment) precast erection will be done using a Link Belt **238HSL** sitting behind (east of) the abutment installation location. Trucks carrying the precast abutment units are to approach from the east. The maximum crane radius shall be 35'. The maximum abutment piece pick weight is approximately 88,000 lbs.

Sequence for Abutment 2 pieces:

Set R-AB 7.
Set R-AB 8.
Set R-WW 7.
Set R-WW 8.

Abutment 1 (west abutment) precast abutment erection will be done using the Grove **GMK 5275** (or **LS-248 H2**) crane, sitting behind (west of) abutment 1. Trucks with precast units are to approach from the west. The maximum crane radius shall be 35'. The maximum pick weight is approximately 94,000 lbs.

Sequence for Abutment 1 pieces:

Set R-AB 6.
Set R-AB 5.
Set R-WW 6.
Set R-WW 5.

All approach slabs will be set using the Link Belt **238HSL** and a Grove **GMK 5275 (or LS-248 H2)** crane, on each side of the bridge respective to the side on which each crane is located. The maximum crane radius shall be 30'. The maximum approach slab pick weight is approximately 37,000lbs. The crane will be located behind each abutment, with delivery of the slabs coming from the west at abutment 1 and the east at abutment 2.

See the attached marked up shop drawings specifying the require rigging for picking each precast piece.

Andrew D. White, P.E.
July 22, 2014

STATE OF VERMONT
ANDREW D. WHITE
NO. 9030
STRUCTURAL
LICENSED
PROFESSIONAL ENGINEER

Digitally signed by Andrew White
Date: 2014.07.22 13:56:18 -02'00'

4 - 1¼" x 15' minimum chokers or equivalent

60°

4 - 25 Ton Screw Type Shackles Typical

Typical for All Abutments

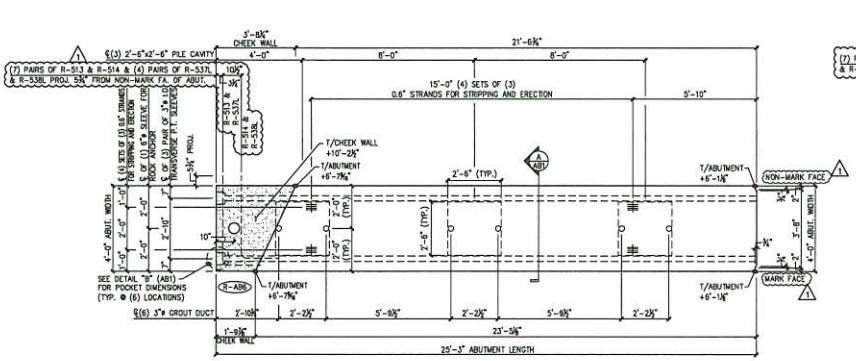

1 AB3 ABUTMENT DIMENSIONAL PLAN VIEW IN FORM
3/8" =1'-0"

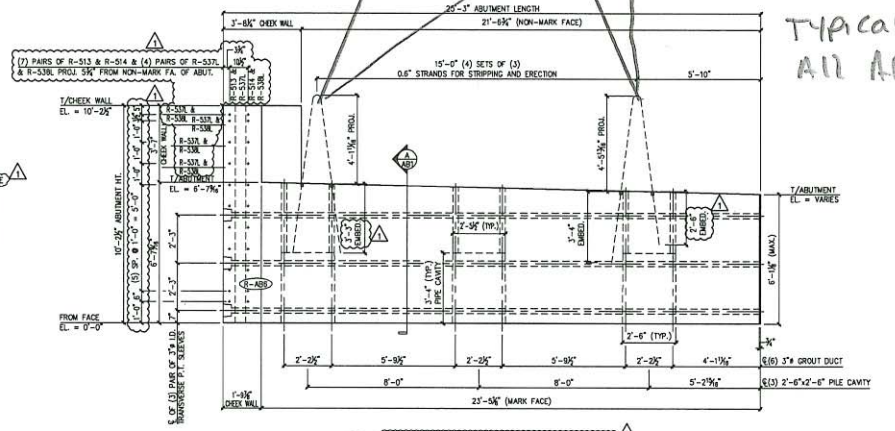

2 AB3 ABUTMENT DIMENSIONAL MARK FACE ELEV.
3/8" =1'-0"

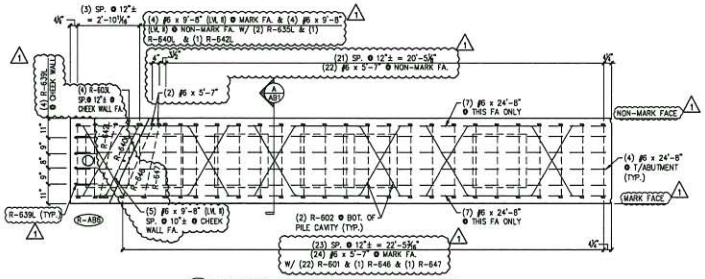

3 AB3 ABUTMENT REINFORCING PLAN VIEW IN FORM
3/8" =1'-0"

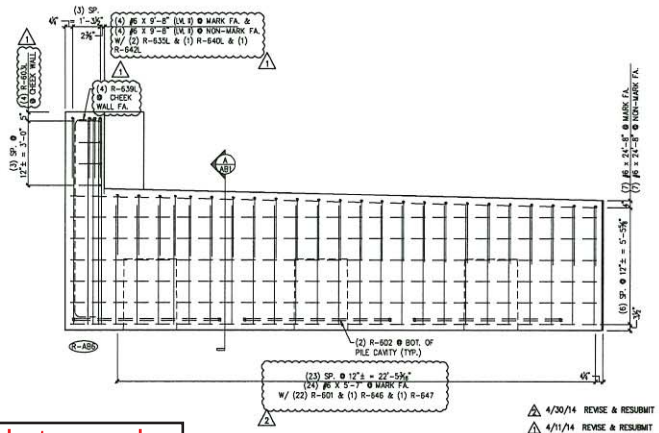

4 AB3 ABUTMENT REINFORCING MARK FACE ELEV.
3/8" =1'-0"

MARK: R-AB6	QTY.: 1	WT.: 46.8 T	VOL.: 21.10 cy

MATERIAL LIST / ABUTMENT

ITEM	MARK	DESCRIPTION	QTY.
1	R-513	#5 BENT BAR (LEVEL I - BLACK REINFORCEMENT)	7
2	R-514	#5 BENT BAR (LEVEL I - BLACK REINFORCEMENT)	7
3	R-537L	#5 BENT BAR (LEVEL II - DUAL COATED)	4
4	R-538L	#5 BENT BAR (LEVEL II - DUAL COATED)	4
5			
6	R-601	#5 BENT BAR (LEVEL I - BLACK REINFORCEMENT)	24
7	R-602	#5 BENT BAR (LEVEL I - BLACK REINFORCEMENT)	5
8	R-646	#5 BENT BAR (LEVEL I - BLACK REINFORCEMENT)	1
9	R-503L	#5 BENT BAR (LEVEL II - DUAL COATED)	4
10	R-635L	#5 BENT BAR (LEVEL II - DUAL COATED)	2
11	R-639L	#5 BENT BAR (LEVEL II - DUAL COATED)	4
12	R-640L	#5 BENT BAR (LEVEL II - DUAL COATED)	1
13	R-642L	#5 BENT BAR (LEVEL II - DUAL COATED)	1
14	R-645	#5 BENT BAR (LEVEL I - BLACK REINFORCEMENT)	1
15	R-646	#5 BENT BAR (LEVEL I - BLACK REINFORCEMENT)	1
16	R-647	#5 BENT BAR (LEVEL I - BLACK REINFORCEMENT)	1
17			
18			
19		#5 x 5'-7" (LEVEL I - BLACK REINFORCEMENT)	48
20		#5 x 9'-8" (LEVEL I - BLACK REINFORCEMENT)	13
21		#5 x 24'-8" (LEVEL I - BLACK REINFORCEMENT)	18
22			
23		SET OF (4) 0.60"ø x 270 KSI STRAND LIFTING LOOPS	2

4/30/14 REVISE & RESUBMIT
4/11/14 REVISE & RESUBMIT

APPROVAL STAMP:

J.P. CARRARA & SONS INC.
Precast & Prestress Manufacturer
2494 CHIC STR., MIDDLEBURY, VERMONT 05753 Phone:(802)388-6361 Fax:(802)388-9010

W.M. SCHULTZ CONSTRUCTION, INC.
PO BOX 2520
BALLSTON SPA, NY 12020

STATE OF VERMONT AGENCY OF TRANSPORTATION
COUNTY OF WINDSOR

TOWN OF ROCHESTER
VT ROUTE 73 (RURAL MAJOR COLLECTOR)
BRIDGE NO.: 16 PROJECT NO.: BRF 0162 (17)

PRECAST ABUTMENT DETAILS

DATE: MAR. 14, 2014
SCALE: NOTED
CHKD: DFTM AAT/RWS JJ/NLT
JOB NO: 23419-013
DWG. NO: AB3

Eriksson Technologies
813.989.3317
TAMPA, FL LRFD.COM
© 2014 ERIKSSON TECHNOLOGIES, INC. ALL RIGHTS RESERVED

STATE OF VERMONT
ANDREW D. WHITE
NO. 9030
STRUCTURAL
LICENSED
PROFESSIONAL ENGINEER

Vermont Agency of Transportation
RECEIVED
ON: May 9, 2014
and Checked for
CONFORMANCE
BY: Jennifer Fitch DATE: 05/16/20

reviewed and stamped for rigging to pick units only; component design by others

S:\Engineering Services\Carrara\14003 Rochester BR 15 & 16\Production Drawings\AutoCAD Files\Bridge 16\BR 16 - R-AB1.dwg

7/17/14

16

2 - 34ø" x 12' STEEL CHOKERS OF EQUIVELENT

2 - 8½ TON SCREW TYPE SHACKLES OF EQUIVELENT

TYPICAL FOR ALL WING WALLS

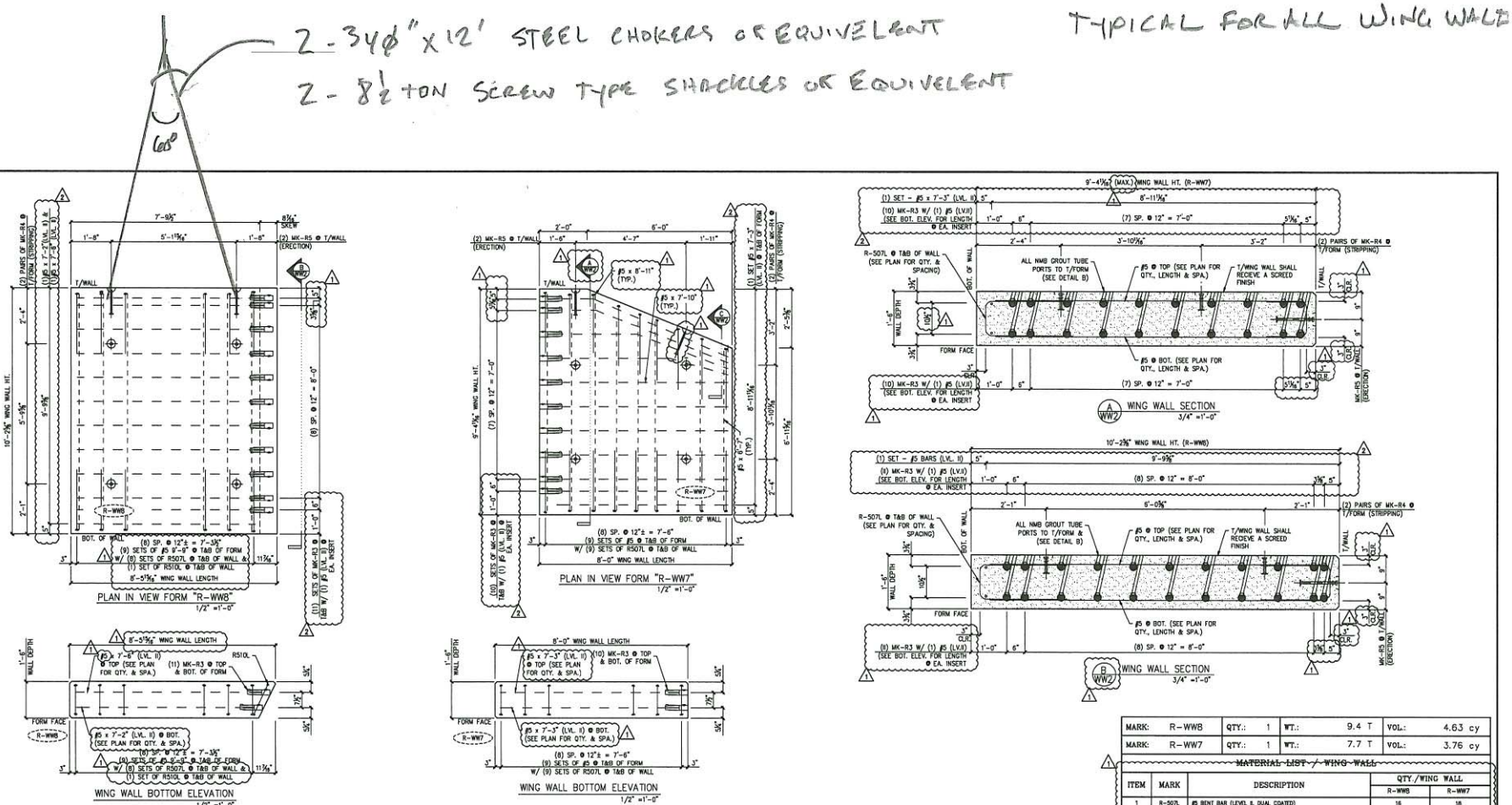

MARK:	R-WW8	QTY.:	1	WT.:	9.4 T	VOL.:	4.63 cy
MARK:	R-WW7	QTY.:	1	WT.:	7.7 T	VOL.:	3.76 cy

MATERIAL LIST / WING WALL

ITEM	MARK	DESCRIPTION	QTY./WING WALL R-WW8	QTY./WING WALL R-WW7
1	R-507L	#5 BENT BAR (LEVEL II, DUAL COATED)	16	18
2	R-510L	#5 BENT BAR (LEVEL II, DUAL COATED)	2	0
3	R-513L	#5 BENT BAR (LEVEL II, DUAL COATED)	0	2
4	R-514L	#5 BENT BAR (LEVEL II, DUAL COATED)	0	2
5	R-515L	#5 BENT BAR (LEVEL II, DUAL COATED)	0	2
6	R-516L	#5 BENT BAR (LEVEL II, DUAL COATED)	0	2
7				
8				
9		#5 x 6'-7" (LEVEL II, DUAL COATED)	0	6
10		#5 x 7'-2" (LEVEL II, DUAL COATED)	12	0
11		#5 x 7'-3" (LEVEL II, DUAL COATED)	0	14
12		#5 x 7'-6" (LEVEL II, DUAL COATED)	12	0
13		#5 x 7'-10" (LEVEL II, DUAL COATED)	0	6
14		#5 x 8'-11" (LEVEL II, DUAL COATED)	0	6
15		#5 x 9'-9" (LEVEL II, DUAL COATED)	18	0
16				
17				
18				
19	MK-R3	NMB SPLICE SLEEVE #5 U-X(PG) (EPOXY COATED) 1	22	20
	MK-R4	41' x 9 1/2" SWIFT LIFT LIFTER	4	4
	MK-R5	20' x 19 3/4" SWIFT LIFT LIFTER	2	2

Vermont Agency of Transportation
RECEIVED
ON: May 9, 2014
and Checked for
CONFORMANCE
BY: Jennifer Fitch DATE: 05/16/2014

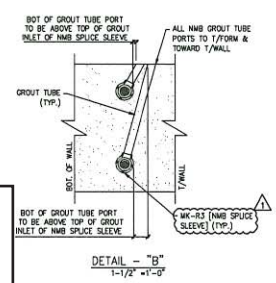

Verify dimension and quantity with material list

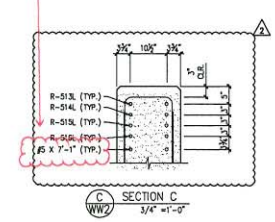

STATE OF VERMONT
ANDREW D. WHITE
NO. 9030
STRUCTURAL
LICENSED
PROFESSIONAL ENGINEER

7/17/14

reviewed and stamped for rigging to pick units only; component design by others

4/30/14 REVISE & RESUBMIT
4/11/14 REVISE & RESUBMIT

APPROVAL STAMP:

J.P. CARRARA & SONS INC.
Precast & Prestress Manufacturer
2484 CASE STR., MIDDLEBURY, VERMONT 05753 Phone:(802)388-6361 Fax:(802)388-9010

W.M. SCHULTZ CONSTRUCTION, INC.
PO BOX 2620
BALLSTON SPA, NY 12020

STATE OF VERMONT AGENCY OF TRANSPORTATION
COUNTY OF WINDSOR

TOWN OF ROCHESTER
VT ROUTE 73 (RURAL MAJOR COLLECTOR)
BRIDGE NO.: 16 PROJECT NO.: BRF 0162 (17)

PRECAST WING WALL DETAILS

DATE: MAR. 14, 2014
SCALE: NOTED
CHKD: DFTM: AAT/RWS JJ/KLT
JOB NO: 23419-013
DWG. NO: WW2

Eriksson technologies
813.989.3317
TAMPA, FL LRFD.COM
©2014 ERIKSSON TECHNOLOGIES, INC. ALL RIGHTS RESERVED

S:\Engineering S... ...ion Drawings\AutoCAD Files\Bridge 16\BR 16 - WW.dwg

16

except for piece R-AS10, where 1"x12' minimum chokers shall be used

4 - 34 ø" x 12' minimum chokers or equivelent

4 - 8½ Ton Screw Type Shackles

Typical for all Approach Slabs

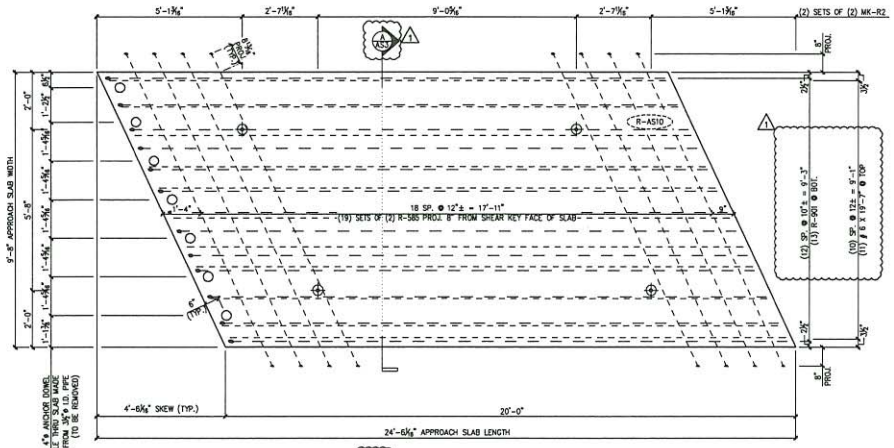

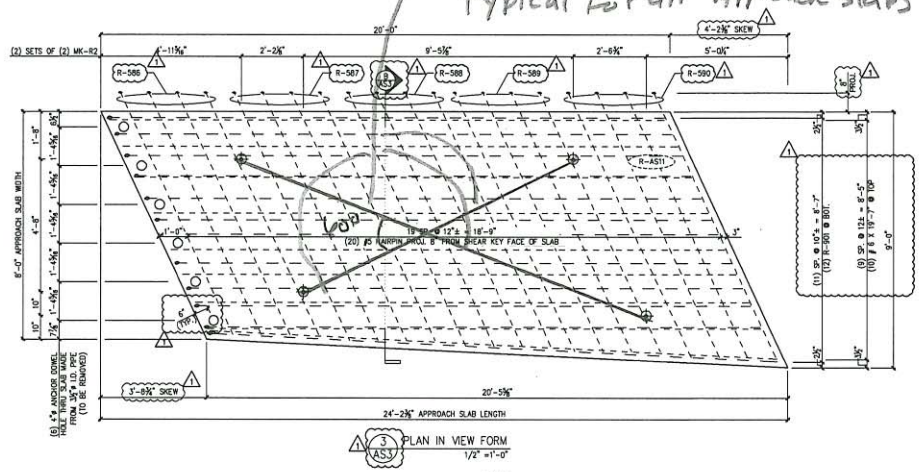

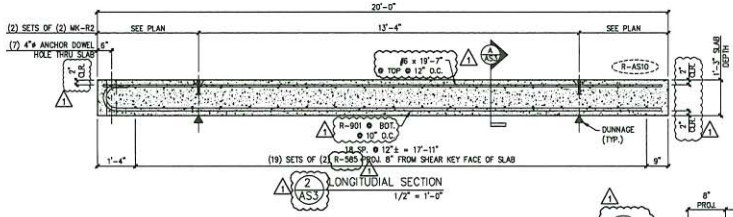

PER THE RFI RESPONSE DATED MAY 8 2014:
FABRICATOR SHALL ROTATE THE #6 BARS TO PROVIDE THE REQUIRED 3" CLEARANCE

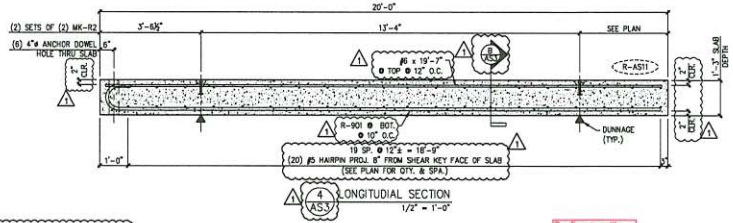

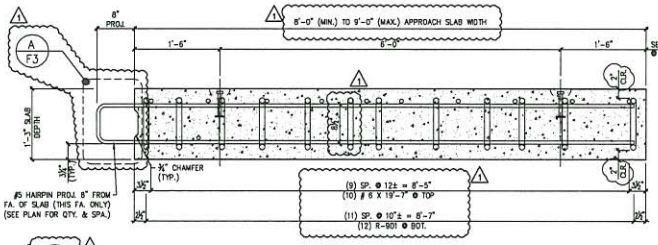

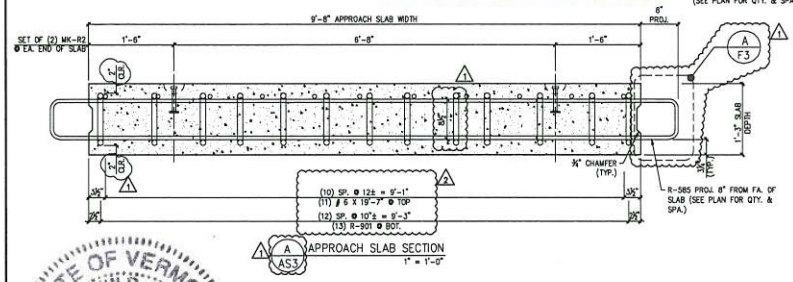

Confirm quantity with A/AS3

MARK:	R-AS10	QTY.: 1	WT.: 18.2 T	VOL.: 8.95 cy
MARK:	R-AS11	QTY.: 1	WT.: 16.0 T	VOL.: 7.87 cy

MATERIAL LIST / APPROACH SLAB

ITEM	MARK	DESCRIPTION	QTY./WING WALL R-AS10	QTY./WING WALL R-AS11
1	R-585	#5 BENT BAR (LEVEL I, BLACK REINFORCEMENT)	36	0
2	R-586	#5 BENT BAR (LEVEL I, BLACK REINFORCEMENT)	0	4
3	R-587	#5 BENT BAR (LEVEL I, BLACK REINFORCEMENT)	0	4
4	R-588	#5 BENT BAR (LEVEL I, BLACK REINFORCEMENT)	0	4
5	R-589	#5 BENT BAR (LEVEL I, BLACK REINFORCEMENT)	0	4
6	R-590	#5 BENT BAR (LEVEL I, BLACK REINFORCEMENT)	0	4
7				
8				
9		#6 x 19'-7" (LEVEL I, BLACK REINFORCEMENT)	9	10
10				
11	R-901	#9 BENT BAR (LEVEL I, BLACK REINFORCEMENT)	13	12
12				
13	MK-R2	81 x 10" SWIFT LIFT LIFTER	4	4

4/30/14 REVISE & RESUBMIT
4/11/14 REVISE & RESUBMIT

Vermont Agency of Transportation
RECEIVED
ON: May 9, 2014
and Checked for
CONFORMANCE
BY: Jennifer Fitch DATE: 05/16/2014

reviewed and stamped for rigging to pick units only; component design by others

APPROVAL STAMP:

J.P. CARRARA & SONS INC.
Precast & Prestress Manufacturer
2484 OKE STR, MIDDLEBURY, VERMONT 05753 Phone:(802)388-6361 Fax:(802)388-9310

W.M. SCHULTZ CONSTRUCTION, INC.
PO BOX 2620
BALLSTON SPA, NY 12020

STATE OF VERMONT AGENCY OF TRANSPORTATION
COUNTY OF WINDSOR

TOWN OF ROCHESTER
VT ROUTE 73 (RURAL MAJOR COLLECTOR)
BRIDGE NO.: 16 PROJECT NO.: BRF 0162 (17)

PRECAST APPROACH SLAB DETAILS

DATE: MAR. 14, 2014
SCALE: NOTED
CHKD: DFTM AAT/RWS JJ/MLT
JOB NO: 23419-013
DWG. NO: AS3

Eriksson Bridges
813.989.3317
TAMPA, FL LRFD.COM
©2014 ERIKSSON TECHNOLOGIES, INC. ALL RIGHTS RESERVED

S:\Engineering Services\Carrara\14002 Rochester BR 15 & 16\Production Drawings\AutoCAD Files\Bridge 16\BR 16-AS.dwg

STATE OF VERMONT
ANDREW D. WHITE
NO. 9030
STRUCTURAL
LICENSED
PROFESSIONAL ENGINEER

7/17/14

16

load charts

GMK5275

44-223 ft. (13.3-68 m) | 112,400 lbs. (51,000 kg) | 100% 26'-7" spread | 360°

Pounds (thousands)

Feet	43.7	59.1	74.5	89.3	104.2	119.1	133.4	148.8	164.0	179.0	193.9	208.7	223.1
10	336.0	332.0	312.0	244.0									
15	267.0	260.0	255.0	244.0	184.0								
20	210.0	211.0	208.0	210.0	182.0	144.0	106.0						
25	176.0	177.0	176.0	176.0	166.0	140.0	106.0	96.0					
30	149.0	150.0	150.0	148.0	150.0	129.0	105.0	86.0	69.0	55.0	45.0		
35		132.0	130.0	127.0	134.0	118.0	96.0	86.0	69.0	55.0	45.0	36.4	
40		114.0	111.0	110.0	103.0	102.0	88.0	82.0	69.0	55.0	45.0	36.4	30.8
45		96.0	95.0	94.0	90.0	86.0	81.0	75.0	68.0	55.0	45.0	36.4	30.8
50			83.0	82.0	81.0	76.0	76.0	70.0	63.0	55.0	45.0	36.4	30.8
55			72.0	71.0	72.0	67.0	68.0	64.0	59.0	52.0	45.0	36.4	30.8
60				62.0	64.0	62.0	60.0	57.0	54.0	49.0	44.0	36.4	30.8
65				57.0	56.0	58.0	54.0	50.0	49.0	46.0	41.2	36.4	30.8
70				51.0	50.0	52.0	49.0	45.0	43.8	43.2	39.0	36.0	30.8
75				46.0	45.0	47.0	44.0	40.8	39.6	39.6	36.8	34.8	30.8
80					41.6	42.0	40.0	37.0	35.8	35.4	34.8	32.6	30.4
85					38.0	38.2	36.0	34.2	32.4	32.0	32.0	31.0	29.6
90					35.6	34.6	32.6	32.8	29.4	29.2	29.2	29.4	28.0
95						31.4	29.4	31.4	26.8	26.6	26.6	27.4	26.8
100						28.8	26.8	28.6	24.4	24.4	24.4	25.0	25.6
105							25.2	26.0	22.2	22.2	22.2	23.0	23.6
110							24.2	23.8	20.0	21.2	20.4	21.2	21.8
115							23.4	21.8	18.4	20.2	19.0	19.4	20.2
120								20.0	17.8	19.4	18.0	18.6	18.6
125								18.4	17.0	18.4	17.2	17.6	17.2
130								16.8	16.2	17.8	16.4	16.6	15.8
135									15.6	16.8	15.8	15.8	14.6
140									15.0	15.4	15.0	14.8	13.4
145										14.4	14.2	13.8	12.4
150										13.2	13.2	12.6	11.2
155										12.2	12.2	11.4	10.2
160										11.4	11.2	10.6	9.2
165											10.6	9.8	8.4
170											9.8	8.8	7.6
175											9.2	8.0	6.8
180												7.2	6.0
185												6.6	5.2
190												6.0	4.6
195													4.0
200													3.4

44-223 ft. (13.3-68 m) | 90,300 lbs. (41,000 kg) | 100% 26'-7" spread | 360°

Pounds (thousands)

Feet	43.7	59.1	74.3	89.3	104.2	119.1	133.4	148.8	164.0	179.0	193.0	208.7	223.1
10	332.0	328.0	312.0	244.0									
15	266.0	258.0	254.0	242.0	185.0								
20	207.0	208.0	206.0	206.0	182.0	144.0	106.0						
25	172.0	173.0	173.0	171.0	166.0	140.0	106.0	86.0					
30	146.0	149.0	146.0	138.0	131.0	128.0	105.0	86.0	69.0	55.0	45.0		
35		124.0	117.0	114.0	110.0	105.0	96.0	86.0	69.0	55.0	45.0	36.4	
40		102.0	101.0	95.0	94.0	88.0	87.0	82.0	69.0	55.0	45.0	36.4	30.8
45		84.0	85.0	81.0	80.0	76.0	75.0	71.0	68.0	55.0	45.0	36.4	30.8
50			72.0	72.0	70.0	70.0	65.0	61.0	59.0	55.0	45.0	36.4	30.8
55			64.0	64.0	61.0	62.0	57.0	54.0	52.0	51.0	45.0	36.4	30.8
60				55.0	56.0	55.0	51.0	47.0	46.0	45.0	44.0	36.4	30.8
65				49.0	51.0	49.0	45.0	42.0	40.6	40.0	39.6	36.4	30.8
70				43.6	45.0	44.0	40.6	39.8	36.2	35.6	35.4	36.0	30.8
75				38.4	40.6	39.4	36.4	37.6	32.4	32.0	31.8	32.2	30.8
80					36.6	35.4	33.0	34.0	29.0	29.4	29.2	30.2	29.8
85					33.0	31.6	30.0	31.0	26.4	28.2	27.6	28.6	27.0
90					29.8	28.6	28.6	28.4	25.0	27.0	26.2	26.6	24.6
95						25.8	27.4	25.6	23.2	25.8	24.6	24.4	22.4
100						23.4	25.2	23.2	21.2	24.0	23.0	22.4	20.4
105							22.8	21.0	20.4	22.2	20.8	20.6	18.6
110							21.0	19.0	19.4	20.4	19.8	18.8	17.0
115							19.2	17.2	18.4	18.6	18.4	17.4	15.6
120								16.0	17.8	17.0	17.0	16.0	14.2
125								15.2	17.0	15.8	16.0	14.6	13.0
130								14.6	15.8	15.0	14.6	13.4	11.8
135									14.6	14.2	13.4	12.2	10.6
140									13.4	13.0	12.2	11.2	9.6
145										12.0	11.2	10.0	8.8
150										11.0	10.2	9.0	7.8
155										10.2	9.2	8.2	7.0
160										9.4	8.4	7.4	6.0
165											7.6	6.6	5.2
170											7.0	5.8	4.6
175											6.2	5.2	3.8
180												4.4	3.2
185												3.8	
190												3.2	
195													
200													

Loads greater than 297,000 lb. can only be lifted with additional equipment
Loads greater than 335,000 lb. can only be lifted with special equipment

GMK5275

GROVE.

THIS CHART IS ONLY A GUIDE AND SHOULD NOT BE USED TO OPERATE THE CRANE. The individual crane's load chart, operating instructions and other instructional plates must be read and understood prior to operating the crane.

GMK5275

Weights & Dimensions

European Version

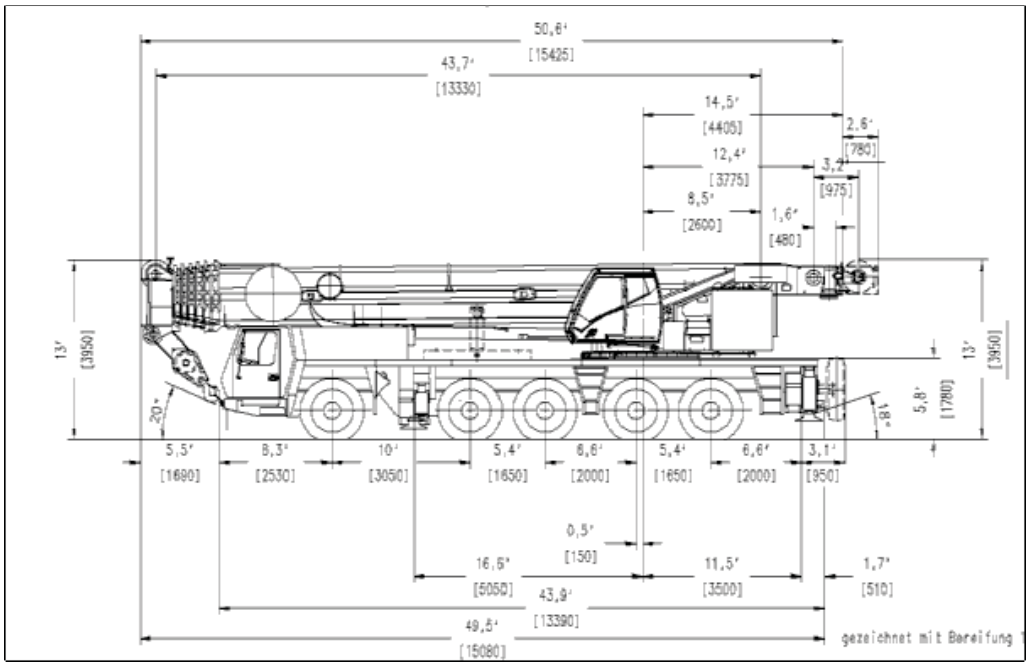

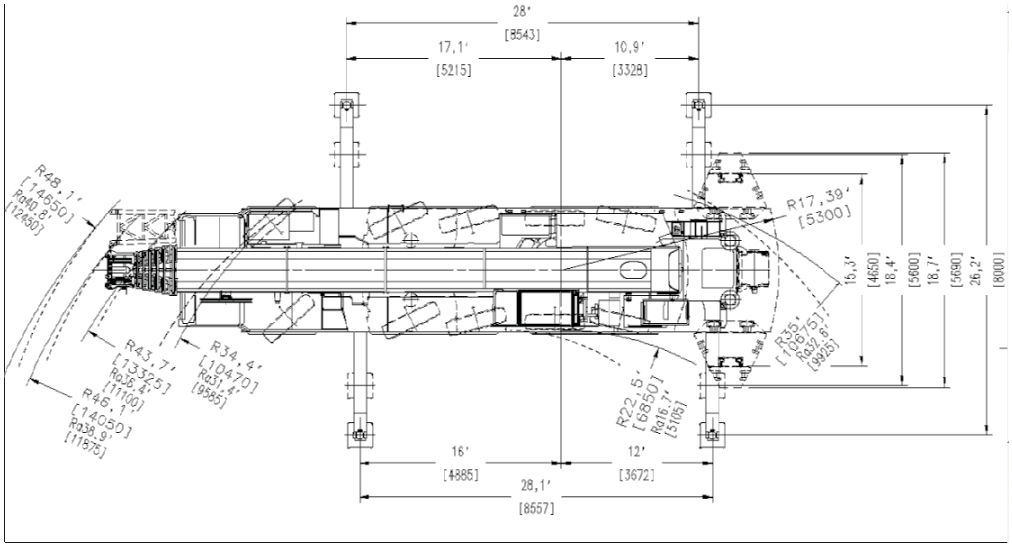

Width is 26'-6"
Center/Center
Rear Outriggers

Basic Weights - lb. (kg.)	Axles 1-3		Axles 4 & 5		Total	
Mercedes power, 14.00 tires, 10X6X10 drive/steer and driver.	74,810	(33934)	53,354	(24201)	128,164	(58135)
Additions:						
10X8X10 drive /steer	316	(316)	39	(39)	739	(355)
14.00R25 spare tire with bracket	-357	(-162)	941	(427)	584	(265)
16.00R25 spare tire with bracket	-439	(-199)	1,155	(524)	717	(325)
20.5R25 spare tire with bracket	-496	(-225)	1,305	(592)	809	(367)
Brackets and hose reel for swingaway	950	(431)	-355	(-161)	595	(270)
39 ft. - 69 ft. (12 m - 21 m) swingaway	5,117	(2321)	-686	(-311)	4,431	-2,010
Auxiliary hoist	-3,124	(-1417)	6,960	(3157)	3,836	(1740)
Substitutions						
16.00R25 tires	904	(410)	419	(190)	1,323	(600)
20.5R25 tires	1,534	(696)	714	(324)	2,249	(1020)
Remove:						
Boom assembly	-43,270	(-19627)	-3,369	(-1528)	-46,639	(-21155)
Front outriggers	-4,828	(-2190)	661	(300)	-4,167	(-1890)
Rear outriggers	2,950	(1338)	-8,109	(-3678)	-5,159	(-2340)
Front and rear outrigger floats	-130	(-59)	-311	(-141)	-441	(-200)

Dimensions

238HSL

General Dimensions	English	*Metric*
Basic Boom	50 ft	*15.24m*
Minimum Load Radius	12 ft	*3.66m*
Maximum Boom Angle	80°	*80°*
Track Shoe Width	44 in	*1.12m*

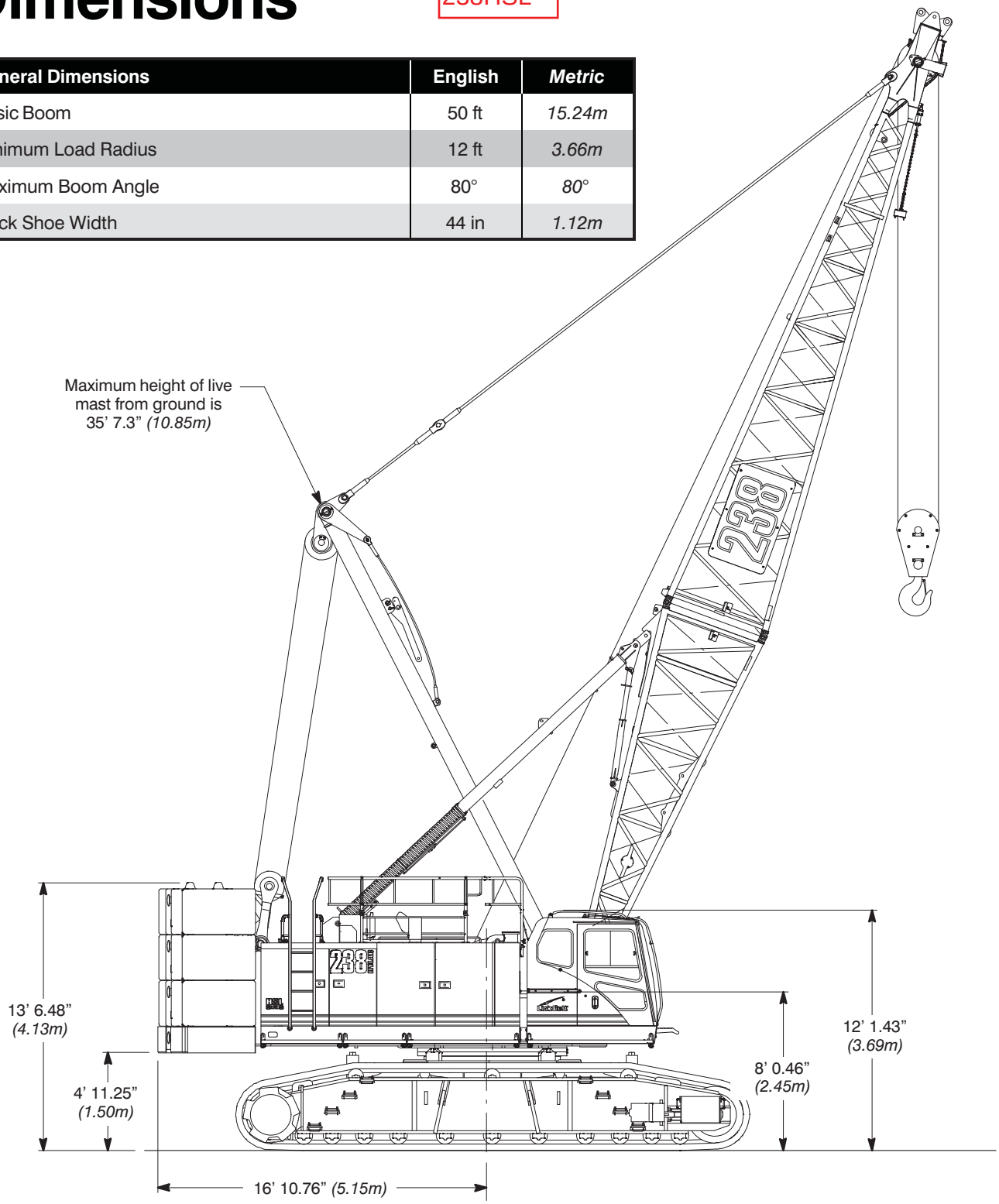

238HSL

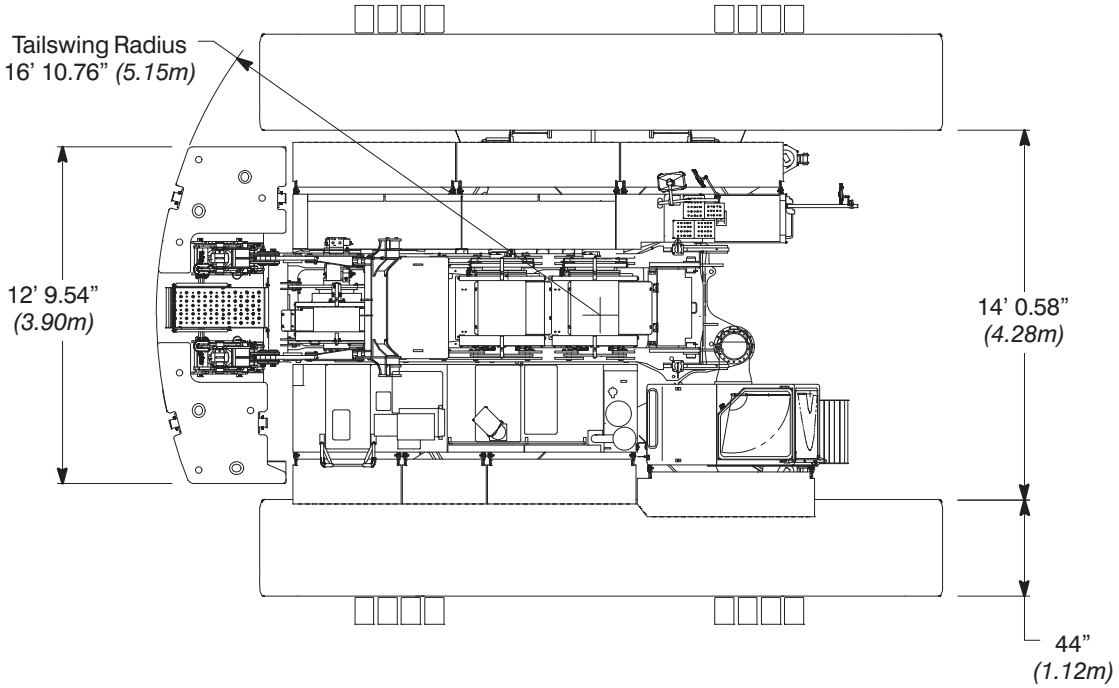
Tailswing Radius
16’ 10.76” (5.15m)
12’ 9.54”
(3.90m)
14’ 0.58”
(4.28m)
44”
(1.12m)

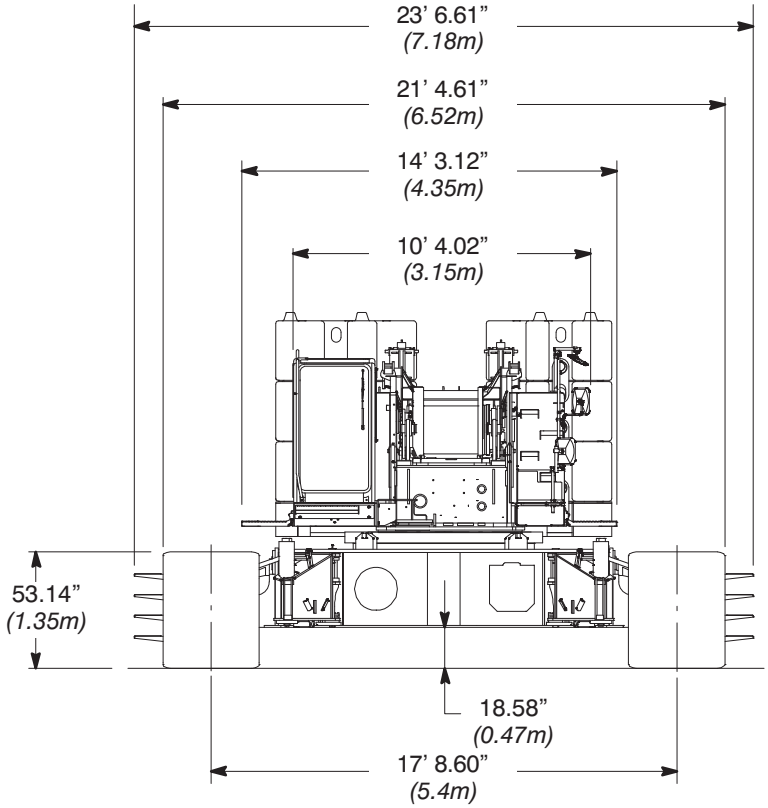
23’ 6.61”
(7.18m)
21’ 4.61”
(6.52m)
14’ 3.12”
(4.35m)
10’ 4.02”
(3.15m)
53.14”
(1.35m)
18.58”
(0.47m)
17’ 8.60”
(5.4m)

Base Crane

238HSL

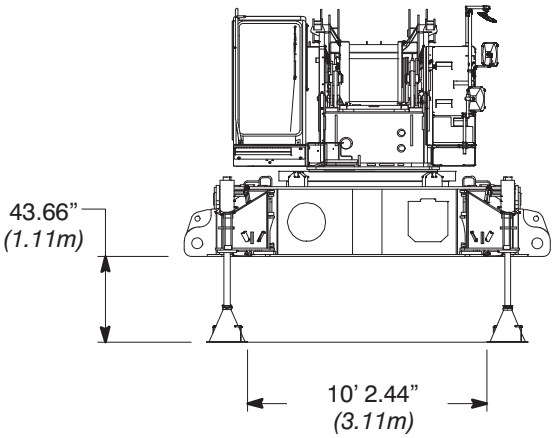

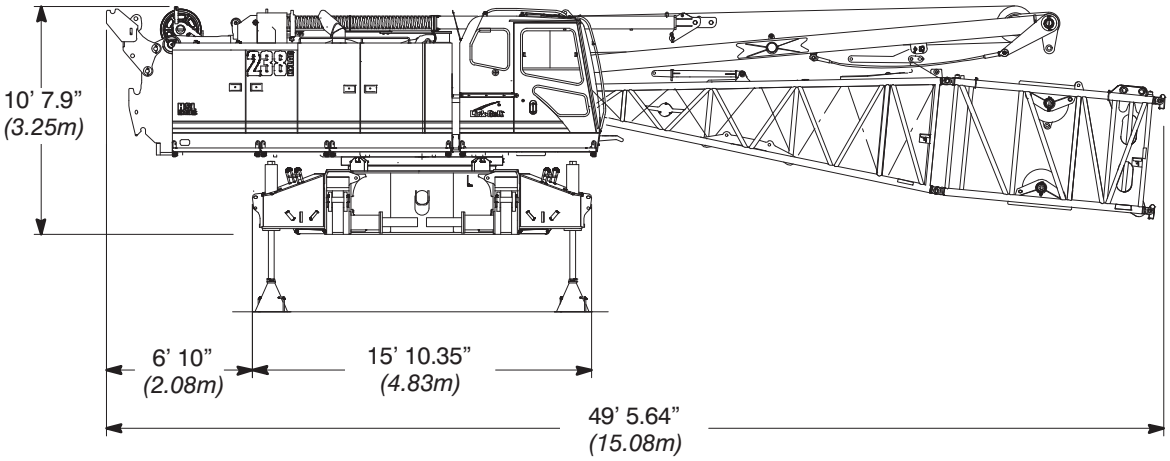

Weight: 87,000 *(39 463kg)*

Side Frames

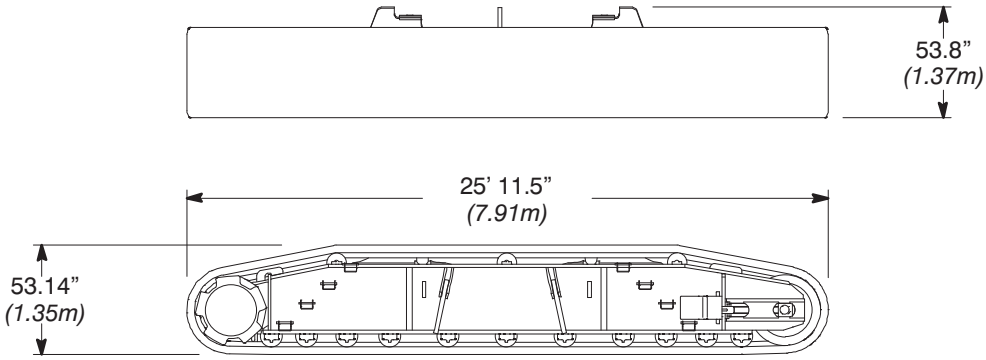

Weight: 32,850 *(14 901kg)*

Working Areas

238HSL

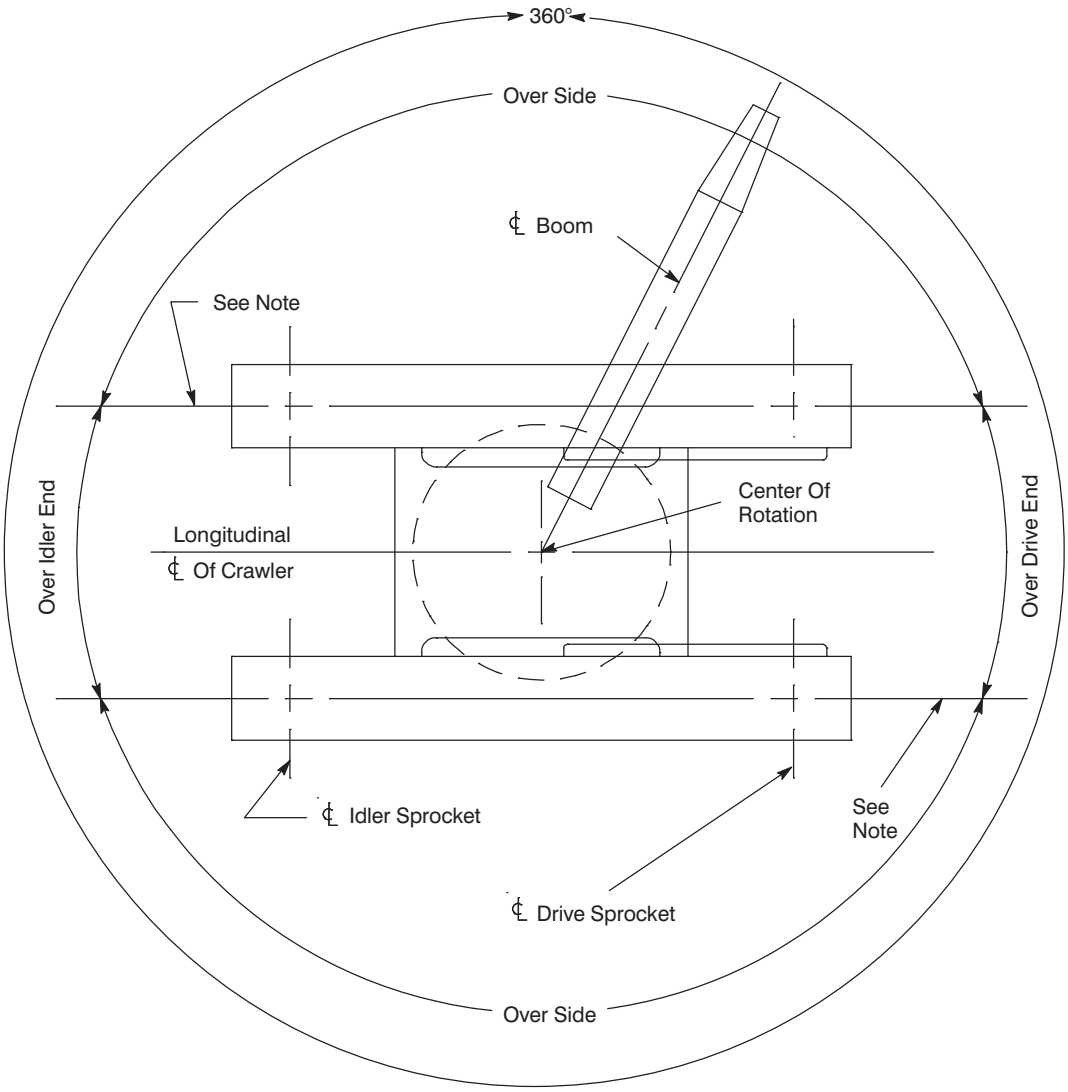

Note: These Lines Determine The Limiting Position Of Any Load For Operation Within Working Areas Indicated.

238HSL

Main Boom Load Charts

Main Boom Lift Capacity Chart — 360° Rotation
ABCD = 107,600 lb (*48 807kg*) Counterweight
[All capacities are listed in kips (*mt*)]

Load Radius ft *(m)*	Boom Length - ft (m)											Load Radius ft *(m)*
	50 *(15.2)*	60 *(18.3)*	70 *(21.3)*	80 *(24.4)*	90 *(27.4)*	100 *(30.5)*	110 *(33.5)*	120 *(36.6)*	130 *(39.6)*	140 *(42.7)*	150 *(45.7)*	
14 *(4.3)*	300.0 *(136.1)*											14 *(4.3)*
15 *(4.6)*	287.7 *(130.5)*	273.4 *(124.0)*										15 *(4.6)*
16 *(4.9)*	271.0 *(122.9)*	269.1 *(122.1)*										16 *(4.9)*
17 *(5.2)*	256.2 *(116.2)*	254.1 *(115.3)*	240.4 *(109.0)*									17 *(5.2)*
18 *(5.5)*	242.8 *(110.1)*	240.8 *(109.2)*	236.6 *(107.3)*									18 *(5.5)*
19 *(5.8)*	230.7 *(104.6)*	228.8 *(103.8)*	228.1 *(103.5)*	213.9 *(97.0)*								19 *(5.8)*
20 *(6.1)*	219.8 *(99.7)*	218.1 *(98.9)*	217.4 *(98.6)*	210.6 *(95.5)*								20 *(6.1)*
25 *(7.6)*	177.4 *(80.5)*	175.9 *(79.8)*	175.5 *(79.6)*	175.0 *(79.4)*	174.4 *(79.1)*	167.7 *(76.1)*	155.2 *(70.4)*					25 *(7.6)*
30 *(9.1)*	138.9 *(63.0)*	138.5 *(62.8)*	138.6 *(62.9)*	138.6 *(62.9)*	138.5 *(62.8)*	138.3 *(62.7)*	138.2 *(62.7)*	136.6 *(62.0)*	126.2 *(57.2)*	117.6 *(53.3)*		30 *(9.1)*
35 *(10.7)*	111.2 *(50.4)*	110.7 *(50.2)*	110.8 *(50.3)*	110.8 *(50.3)*	110.7 *(50.2)*	110.5 *(50.1)*	110.4 *(50.1)*	110.2 *(50.0)*	110.0 *(49.9)*	109.8 *(49.8)*	104.7 *(47.5)*	35 *(10.7)*
40 *(12.2)*	92.5 *(42.0)*	92.0 *(41.7)*	92.0 *(41.7)*	92.0 *(41.7)*	91.9 *(41.7)*	91.8 *(41.6)*	91.6 *(41.5)*	91.4 *(41.5)*	91.2 *(41.4)*	91.0 *(41.3)*	90.8 *(41.2)*	40 *(12.2)*
50 *(15.2)*	68.6 *(31.1)*	68.0 *(30.8)*	68.1 *(30.9)*	68.1 *(30.9)*	67.9 *(30.8)*	67.8 *(30.8)*	67.6 *(30.7)*	67.4 *(30.6)*	67.1 *(30.4)*	66.9 *(30.3)*	66.7 *(30.3)*	50 *(15.2)*
60 *(18.3)*		53.5 *(24.3)*	53.7 *(24.4)*	53.6 *(24.3)*	53.5 *(24.3)*	53.4 *(24.2)*	53.2 *(24.1)*	53.0 *(24.0)*	52.8 *(23.9)*	52.6 *(23.9)*	52.3 *(23.7)*	60 *(18.3)*
70 *(21.3)*			43.8 *(19.9)*	43.8 *(19.9)*	43.7 *(19.8)*	43.6 *(19.8)*	43.4 *(19.7)*	43.2 *(19.6)*	43.0 *(19.5)*	42.7 *(19.4)*	42.5 *(19.3)*	70 *(21.3)*
80 *(24.4)*					36.7 *(16.6)*	36.6 *(16.6)*	36.4 *(16.5)*	36.1 *(16.4)*	35.9 *(16.3)*	35.7 *(16.2)*	35.4 *(16.1)*	80 *(24.4)*
90 *(27.4)*						31.4 *(14.2)*	31.2 *(14.2)*	31.0 *(14.1)*	30.8 *(14.0)*	30.6 *(13.9)*	30.4 *(13.8)*	90 *(27.4)*
100 *(30.5)*							27.1 *(12.3)*	26.9 *(12.2)*	26.7 *(12.1)*	26.5 *(12.0)*	26.2 *(11.9)*	100 *(30.5)*
110 *(33.5)*								23.5 *(10.7)*	23.3 *(10.6)*	23.1 *(10.5)*	22.9 *(10.4)*	110 *(33.5)*
120 *(36.6)*									20.6 *(9.3)*	20.4 *(9.3)*	20.1 *(9.1)*	120 *(36.6)*
130 *(39.6)*										18.1 *(8.2)*	17.9 *(8.1)*	130 *(39.6)*
140 *(42.7)*											15.9 *(7.2)*	140 *(42.7)*

This material is supplied for reference use only. Operator must refer to in-cab Crane Rating Manual and Operator's Manual to determine allowable crane lifting capacities and assembly and operating procedures.

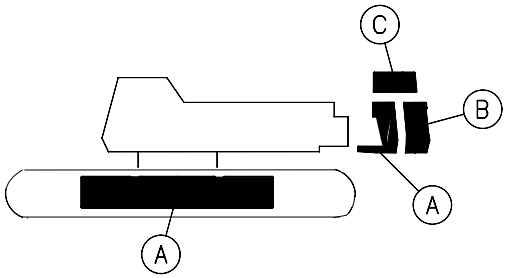

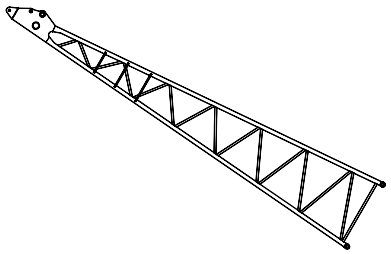

MAIN BOOM CAPACITIES – 80 FT OPEN THROAT TUBE BOOM

Load Radius (ft)	Boom Angle (deg)	360° Rotation					Over End Blocked	Load Radius (ft)
		ABC + A CTWT (lb)	ABC CTWT (lb)	AB CTWT (lb)	A CTWT (lb)	0 CTWT (lb)	ABC + A CTWT (lb)	
14.4	82.0	260,100	260,100	260,100	260,100	238,700	260,100	14.4
15	81.6	257,700	257,700	257,700	257,700	211,400	257,700	15
16	80.9	253,500	253,500	253,500	244,500	176,800	253,500	16
17	80.1	249,600	249,600	249,600	210,900	151,700	249,600	17
18	79.4	245,700	245,700	245,700	184,700	132,700	245,600	18
19	78.7	241,900	241,900	235,800	164,200	117,800	241,900	19
20	77.9	238,300	238,300	224,600	147,700	105,800	238,300	20
25	74.2	194,300	194,000	156,900	97,500	69,300	194,300	25
30	70.5	162,100	144,800	116,800	72,100	50,900	162,400	30
35	66.6	128,900	115,000	92,600	56,700	39,700	135,700	35
40	62.7	106,700	95,100	76,400	46,500	32,300	116,500	40
50	54.3	78,800	70,100	56,000	33,500	22,800	88,600	50
60	44.8	61,900	54,900	43,700	25,700	17,100	71,400	60
70	33.5	50,600	44,800	35,400	20,400	13,200	59,000	70
80	16.5	42,400	37,400	29,400	16,500	10,400	48,400	80

Note: Refer To Page 13 For "Capacity Deductions" Caused By Any Jib Attachment Or Tip Extension.

REFERENCE ONLY