STATE OF VERMONT
AGENCY OF TRANSPORTATION

PRELIMINARY INFORMATION SHEET (BRIDGE)

Version 12.01.01c

LRFD

INDEX OF SHEETS

PLAN SHEETS

STANDARDS LIST

⚠ REVISION SHEETS: JUNE 11, 2014
152 BR 16 CURTAIN WALL DETAILS (2 OF 2)
156 BR 16 ABUTMENT NO 1 PLAN & ELEVATION

⚠ REVISION SHEETS: JUNE 19, 2014
122 BR 16 PRELIMINARY INFORMATION SHEET
125 BR 16 TYPICAL EARTHWORK SECTIONS
150 BR 16 NEXT BEAM DETAILS (3 OF 3)
154 BR 16 PRECAST APPROACH SLAB (1 OF 2)

VHB Vanasse Hangen Brustlin, Inc.

AS BUILT "REBAR" DETAILS

LEVEL I	LEVEL II	LEVEL III
TYPE:	TYPE:	TYPE:
GRADE:	GRADE:	GRADE:

TRAFFIC DATA

YEAR	ADT	DHV	% D	% T	ADTT
2014	770	160	65	8.7	65
2034	810	160	65	12.6	100

20 year ESAL for flexible pavement from 2014 to 2034 : 398000
40 year ESAL for flexible pavement from 2014 to 2054 : 950000
Design Speed : 45 mph

FINAL HYDRAULIC REPORT

HYDROLOGIC DATA

Date: October 2012

DRAINAGE AREA : 6.0 sq. mi.
CHARACTER OF TERRAIN : Mountainous, forested, steep
STREAM CHARACTERISTICS : Incised, semi-alluvial
NATURE OF STREAMBED : Cobbles and gravel

PEAK FLOW DATA

Q 2.33 =	400 cfs	Q 50 =	1400 cfs
Q 10 =	860 cfs	Q 100 =	1650 cfs
Q 25 =	1150 cfs	Q 500 =	2300 cfs

DATE OF FLOOD OF RECORD : Unknown
ESTIMATED DISCHARGE: Unknown
WATER SURFACE ELEV.: Unknown
NATURAL STREAM VELOCITY : @ 50 = 11.4 fps
ICE CONDITIONS : Moderate
DEBRIS: Moderate
DOES THE STREAM REACH MAXIMUM HIGHWATER ELEV. RAPIDLY? No
IS ORDINARY RISE RAPID? No
IS STAGE AFFECTED BY UPSTREAM OR DOWNSTREAM CONDITIONS? No
IF YES, DESCRIBE:

WATERSHED STORAGE: <1%
HEADWATERS:
UNIFORM: X
IMMEDIATELY ABOVE SITE:

EXISTING STRUCTURE INFORMATION

STRUCTURE TYPE: Concrete T-beam
YEAR BUILT: 1929
CLEAR SPAN(NORMAL TO STREAM): 18'
VERTICAL CLEARANCE ABOVE STREAMBED: 8'
WATERWAY OF FULL OPENING: 150 sq. ft.
DISPOSITION OF STRUCTURE: Replace
TYPE OF MATERIAL UNDER SUBSTRUCTURE: See borings

WATER SURFACE ELEVATIONS AT:

Q2.33 =	945.8'	VELOCITY =	9.0 fps
Q10 =	947.7'	"	11.5 fps
Q25 =	948.6'	"	12.8 fps
Q50 =	950.5'	"	13.6 fps
Q100 =	951.5'	"	14.3 fps

LONG TERM STREAMBED CHANGES: None noted

IS THE ROADWAY OVERTOPPED BELOW Q100: No
FREQUENCY: N/A
RELIEF ELEVATION: 952.6'
DISCHARGE OVER ROAD @Q100: N/A

UPSTREAM STRUCTURE

TOWN: Rochester
DISTANCE: 1900'
HIGHWAY # : TH 40 (NFS 226)
STRUCTURE #:
CLEAR SPAN: 23.5'
CLEAR HEIGHT: ~7.5'
YEAR BUILT:
FULL WATERWAY:
STRUCTURE TYPE: I-beam bridge with wood deck

DOWNSTREAM STRUCTURE

TOWN: Rochester
DISTANCE: 900'
HIGHWAY # :
STRUCTURE #:
CLEAR SPAN:
CLEAR HEIGHT:
YEAR BUILT:
FULL WATERWAY:
STRUCTURE TYPE: Confluence with West Branch White River

LRFR LOAD RATING FACTORS

LOADING LEVELS	TRUCK						
	H-20	HL-93	3S2	6 AXLE	3A. STR.	4A. STR.	5A. SEMI
TONNAGE	20	36	36	66	30	34.5	38
INVENTORY	1.86	1.01					
POSTING							
OPERATING	2.51	1.36	2.4	1.44	1.86	1.68	1.94
COMMENTS:							

• SEE PROJECT NOTES.

PILE DRIVING AND TESTING REQUIREMENTS

1. NOMINAL PILE DRIVING CAPACITY — Rndr: •
2. PILE TEST RESISTANCE FACTOR — ϕ: 0.65
3. MAXIMUM PILE TIP ELEVATION — •
4. A MINIMUM OF 3 DYNAMIC TESTS SHALL BE PERFORMED DURING INSTALLATION. NO LESS THAN 1 TEST SHOULD BE PERFORMED AT EACH ABUTMENT. THE REMAINING PILES SHOULD BE CALIBRATED BY WAVE EQUATION ANALYSIS.

PROPOSED STRUCTURE

STRUCTURE TYPE: Single span prestressed concrete NEXT beam

CLEAR SPAN(NORMAL TO STREAM): 46'
VERTICAL CLEARANCE ABOVE STREAMBED: 8.5'
WATERWAY OF FULL OPENING: 315 sq. ft.

WATER SURFACE ELEVATIONS AT:

Q2.33 =	945.0'	VELOCITY=	9.4 fps
Q10 =	946.5'	"	10.7 fps
Q25 =	947.3'	"	11.0 fps
Q50 =	947.9'	"	11.4 fps
Q100 =	948.4'	"	12.0 fps

IS THE ROADWAY OVERTOPPED BELOW Q100: No
FREQUENCY: N/A
RELIEF ELEVATION: 952.6'
DISCHARGE OVER ROAD @Q100: N/A

AVERAGE LOW ELEVATION OF SUPERSTRUCTURE: 950.6'
VERTICAL CLEARANCE: @ Q50 = 2.7'

SCOUR: Contraction scour = 2.0' up to Q500

REQUIRED CHANNEL PROTECTION: Stone Fill, Type IV

PERMIT INFORMATION

AVERAGE DAILY FLOW:	12 cfs	DEPTH OR ELEVATION:
ORDINARY LOW WATER:	6 cfs	~0.5'
ORDINARY HIGH WATER:	175 cfs	~1.5'

TEMPORARY BRIDGE REQUIREMENTS

STRUCTURE TYPE: None needed - detour will be in place during construction
CLEAR SPAN (NORMAL TO STREAM):
VERTICAL CLEARANCE ABOVE STREAMBED:
WATERWAY AREA OF FULL OPENING:

ADDITIONAL INFORMATION

TRAFFIC MAINTENANCE NOTES

1. MAINTAIN TRAFFIC ON AN OFF SITE DETOUR.
2. TRAFFIC SIGNALS ARE NOT NECESSARY.
3. SIDEWALKS ARE NOT NECESSARY

DESIGN VALUES

1. DESIGN LIVE LOAD		HL-93
2. FUTURE PAVEMENT	d_p:	0 INCH
3. DESIGN SPAN	L:	58.00 FT
4. MIN. MID-SPAN POS. CAMBER @ RELEASE (PRESTRESSED UNITS)	Δ:	1.75 INCH
5. PRESTRESSING STRAND (0.60 INCH DIAMETER - LOW RELAX)	f_y:	270 KSI
6. PRESTRESSED CONCRETE STRENGTH	f'_c:	7.0 KSI
7. PRESTRESSED CONCRETE RELEASE STRENGTH	f'_{ci}:	5.5 KSI
8. CONCRETE, HIGH PERFORMANCE CLASS AA	f'_c:	- - -
9. CONCRETE, HIGH PERFORMANCE CLASS A	f'_c:	- - -
10. CONCRETE, HIGH PERFORMANCE CLASS B	f'_c:	- - -
11. CONCRETE, CLASS C	f'_c:	- - -
12. REINFORCING STEEL	f_y:	60 KSI
13. STRUCTURAL STEEL AASHTO M270	f_y:	- - -
14. SOIL UNIT WEIGHT	γ:	- - -
15. NOMINAL BEARING RESISTANCE OF SOIL	q_n:	- - -
16. SOIL BEARING RESISTANCE FACTOR (REFER TO AASHTO LRFD)	ϕ:	- - -
17. NOMINAL BEARING RESISTANCE OF ROCK	q_n:	- - -
18. ROCK BEARING RESISTANCE FACTOR (REFER TO AASHTO LRFD)	ϕ:	- - -
19. NOMINAL AXIAL PILE RESISTANCE	q_p:	- - -
20. PILE YIELD STRENGTH ASTM A572	f_y:	50 KSI
21. PILE SIZE		HP 12X 84
22. EST. AVG. PILE LENGTH	L_p:	14 '
23. PILE RESISTANCE FACTOR	ϕ:	- - -
24. LATERAL PILE DEFLECTION	Δ:	- - -
25. BASIC WIND SPEED	V_{3s}:	- - -
26. MINIMUM GROUND SNOW LOAD	p_g:	- - -
27. SEISMIC DATA — PGA: - - -	S_s:	- - -
	S_1:	- - -

PROJECT NAME: ROCHESTER
PROJECT NUMBER: BRF 0162(17)

FILE NAME: z85e035 PI.xls
PROJECT LEADER: G.S. GOODRICH
DESIGNED BY: E.A. FIALA
BR 16 PRELIMINARY INFORMATION SHEET

PLOT DATE: 6/18/2014
DRAWN BY: E.A. FIALA
CHECKED BY: S.E. BURBANK
SHEET 122 OF 238

VHB 57527

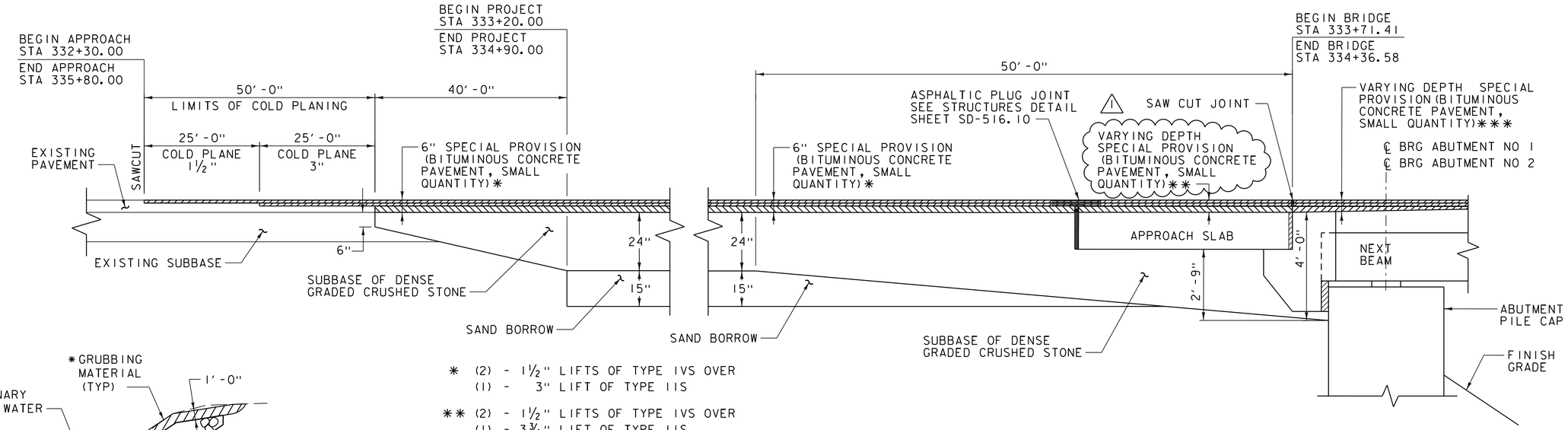

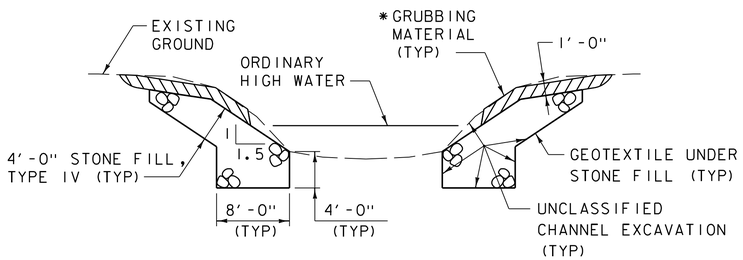

TYPICAL CHANNEL SECTION

NOT TO SCALE

*GRUBBING MATERIAL SHALL NOT BE PLACED ON THE STONE FILL IN THE AREA UNDER THE BRIDGE. WHENEVER CHANNEL SLOPE INTERSECTS ROADWAY SUBBASE, GRUBBING MATERIAL SHALL BEGIN AT THE BOTTOM OF SUBBASE.

* (2) - 1½" LIFTS OF TYPE IVS OVER
(1) - 3" LIFT OF TYPE IIS

** (2) - 1½" LIFTS OF TYPE IVS OVER
(1) - 3¾" LIFT OF TYPE IIS

*** (2) - 1½" LIFTS OF TYPE IVS
(1) - VARIABLE LIFT OF TYPE IVS (0" MIN, 3" MAX)

NOTE: EMULSIFIED ASPHALT IS TO BE APPLIED AT A RATE OF 0.040 GAL/SY BETWEEN ALL LIFTS OF BITUMINOUS CONCRETE PAVEMENT AND ON THE EXISTING PAVEMENT AND THE APPROACH SLAB PRIOR TO PLACING THE FIRST LIFT, AS DIRECTED BY THE ENGINEER.

APPROACH SECTION

NOT TO SCALE

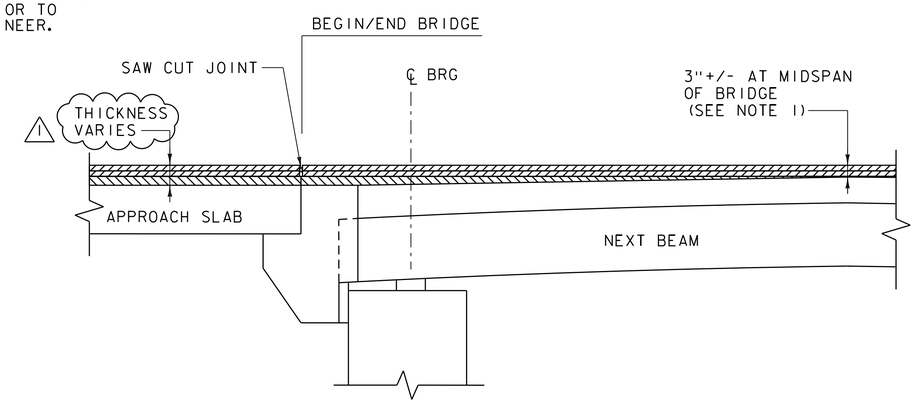

NOTE:

1. PAVEMENT THICKNESS VARIES ON BRIDGE TO ACCOUNT FOR CAMBER. SEE BR 16 NEXT BEAM DETAILS (2 OF 3) FOR PAVEMENT THICKNESS IN PRECAST CONCRETE CURB HEIGHT DETAIL.

PAVEMENT TRANSITION DETAIL

NOT TO SCALE

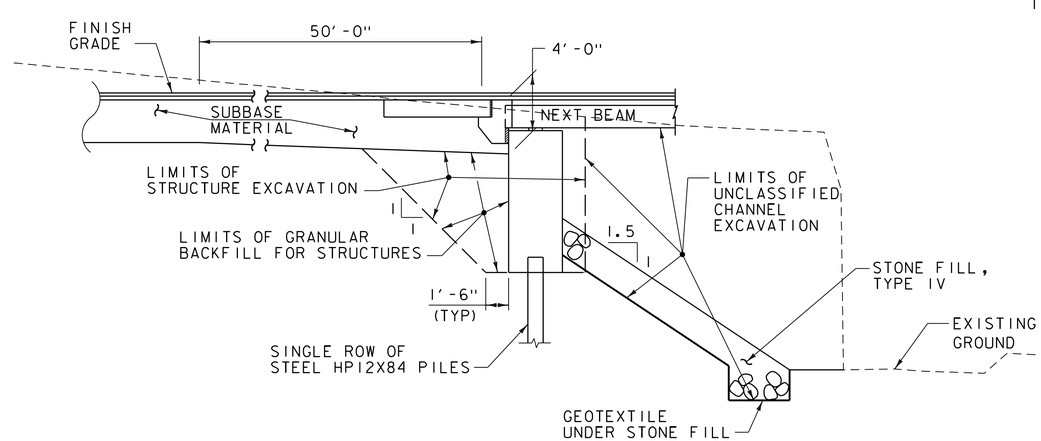

NOTE: ACTUAL STRUCTURE EXCAVATION LIMITS SHALL BE DETERMINED BY THE CONTRACTOR. HOWEVER, ONLY THE EXCAVATION BETWEEN THE LIMITS SHOWN FOR STRUCTURE EXCAVATION WILL BE PAID FOR UNDER ITEM 204.25 "STRUCTURE EXCAVATION". EXCAVATION OUTSIDE OF THESE LIMITS OR OUTSIDE THE UNCLASSIFIED CHANNEL EXCAVATION WILL BE AT THE EXPENSE OF THE CONTRACTOR.

ABUTMENT EARTHWORK SECTION

NOT TO SCALE

REVISION	DESCRIPTION	DATE
1	DIMENSION CHANGES	6/19/2014

PROJECT NAME: ROCHESTER
PROJECT NUMBER: BRF 0162(17)

Vanasse Hangen Brustlin, Inc.

FILE NAME: z85e035typ.dgn
PROJECT LEADER: G.S. GOODRICH
DESIGNED BY: C.L. CILLEY
BR 16 TYPICAL EARTHWORK SECTIONS

PLOT DATE: 6/18/2014
DRAWN BY: C.L. CILLEY
CHECKED BY: D.M. PECK
SHEET 125 OF 238

VHB 57527

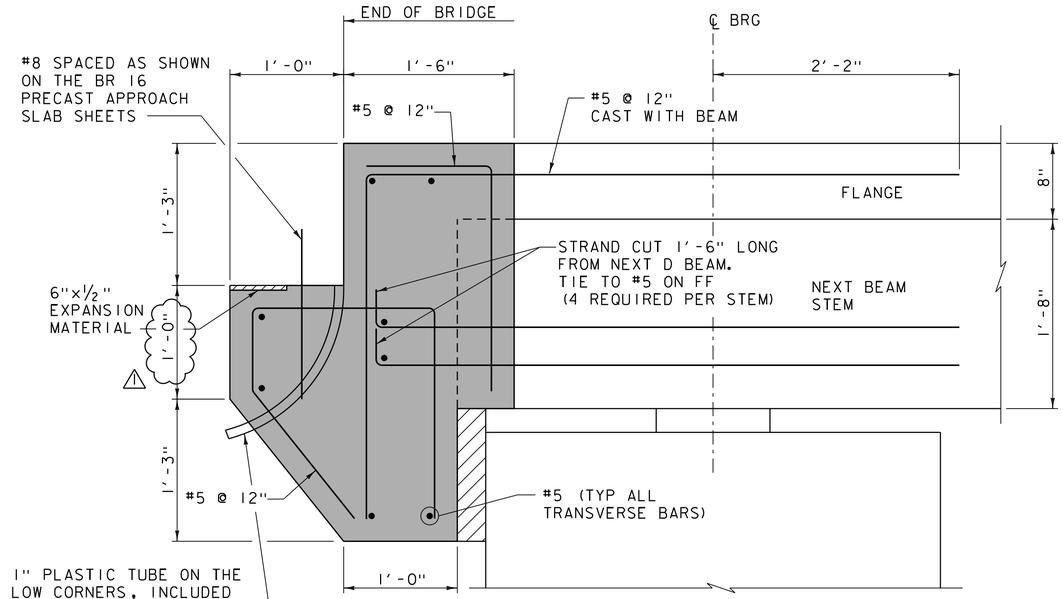

PRECAST CONCRETE CURTAIN WALL
REINFORCING TYPICAL SECTION

(ABUT NO 1 SHOWN, ABUT NO 2 SIMILAR, OPPOSITE HAND)
(DIMENSIONS ARE NORMAL TO ℄ BRG)
SCALE 1½" = 1'-0"

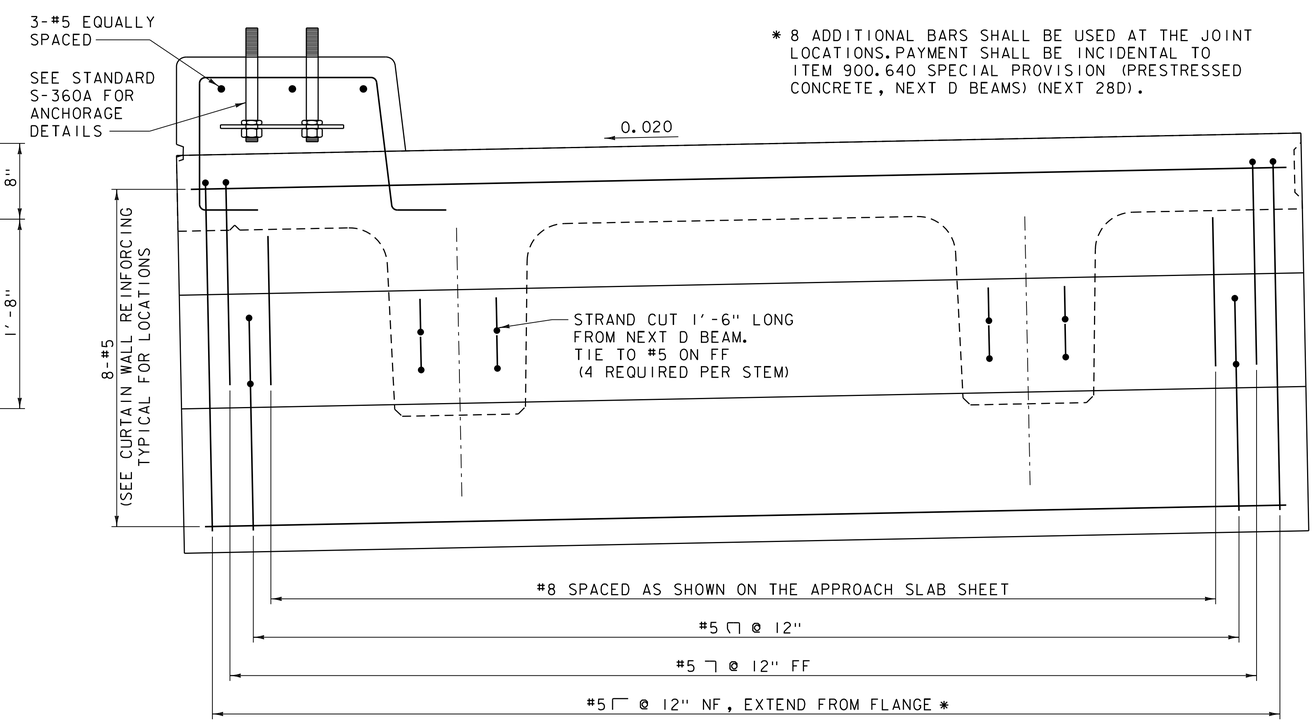

PRECAST CONCRETE CURTAIN WALL
REINFORCING ELEVATION

SCALE 1½" = 1'-0"

▨ - LIMITS OF PRECAST CONCRETE CURTAIN WALL

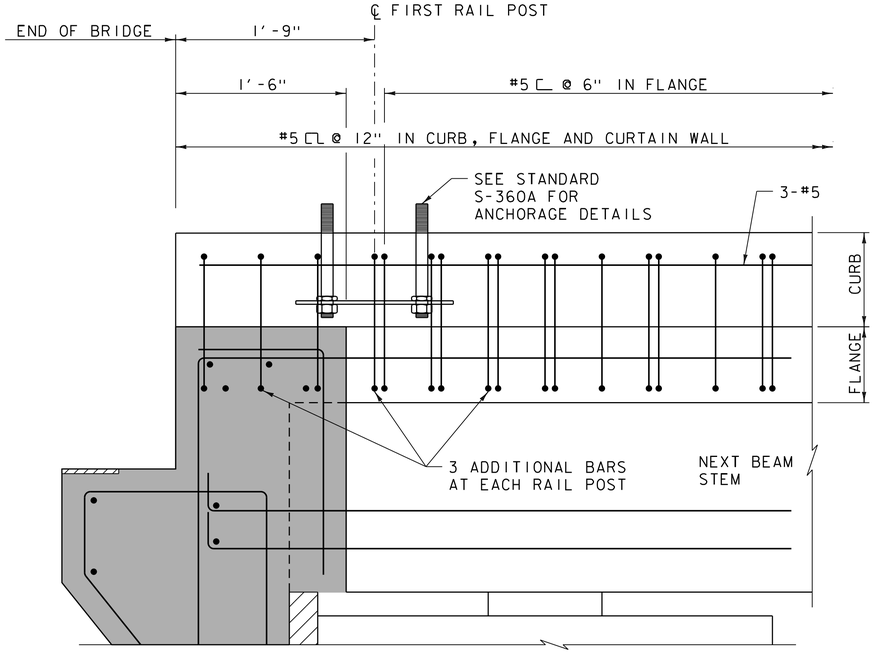

PRECAST CONCRETE CURTAIN WALL
REINFORCING AT CURB SECTION

(ABUT NO 1 SHOWN, ABUT NO 2 SIMILAR, OPPOSITE HAND)
(DIMENSIONS ARE NORMAL TO ℄ BRG)
SCALE 1½" = 1'-0"

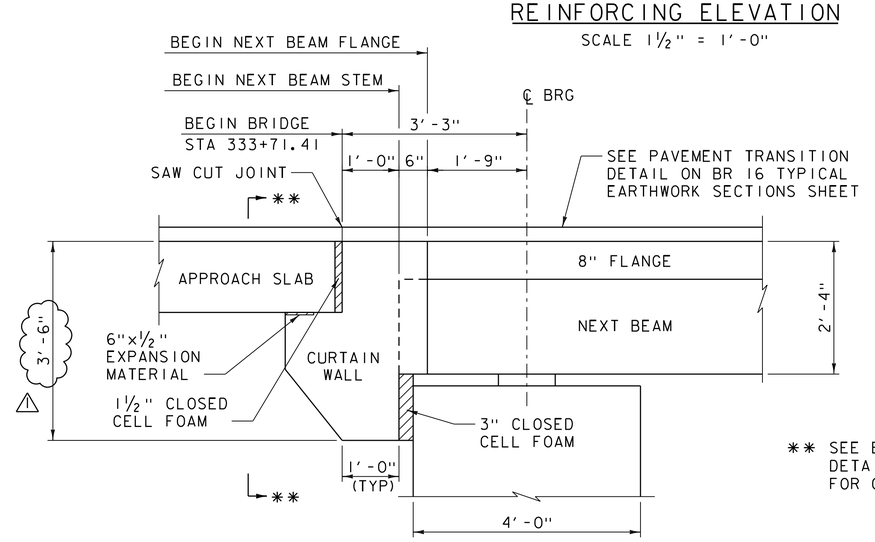

BRIDGE END DETAIL

(ABUT NO 1 SHOWN, ABUT NO 2 SIMILAR, OPPOSITE HAND)
(DIMENSIONS ARE NORMAL TO ℄ BRG)
SCALE ¾" = 1'-0"

NOTE:

NF = NEAR FACE
FF = FAR FACE
EF = EACH FACE
▲ = CUT TO FIT IN FIELD
3" CLEAR, UNLESS OTHERWISE SPECIFIED ON THE PLANS.
2'-2" BAR LAP UNLESS OTHERWISE SPECIFIED ON THE PLANS.

** SEE BR 16 CURTAIN WALL DETAILS (SHEET 2 OF 2) FOR CURTAIN WALL END VIEWS

REVISION	DESCRIPTION	DATE
1	DIMENSION CHANGES	6/19/2014

PROJECT NAME: ROCHESTER
PROJECT NUMBER: BRF 0162(17)

FILE NAME: z85e035sub.dgn
PROJECT LEADER: G.S. GOODRICH
DESIGNED BY: J.J. WESTCOTT
BR 16 NEXT BEAM DETAILS (3 OF 3)

PLOT DATE: 6/18/2014
DRAWN BY: B.J. MASSE
CHECKED BY: L.S. CHERVINCKY
SHEET 150 OF 238

VHB Vanasse Hangen Brustlin, Inc.

VHB 57527

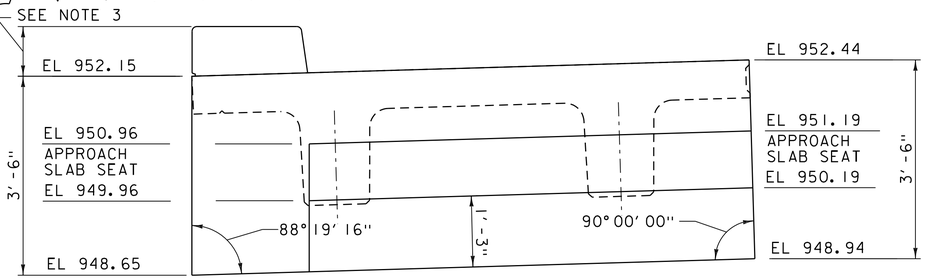

ABUTMENT NO 1, NEXT 1

SCALE 3/4" = 1'-0"

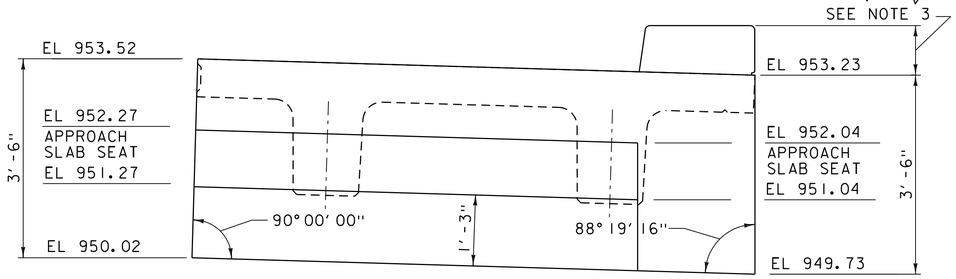

ABUTMENT NO 2, NEXT 1

SCALE 3/4" = 1'-0"

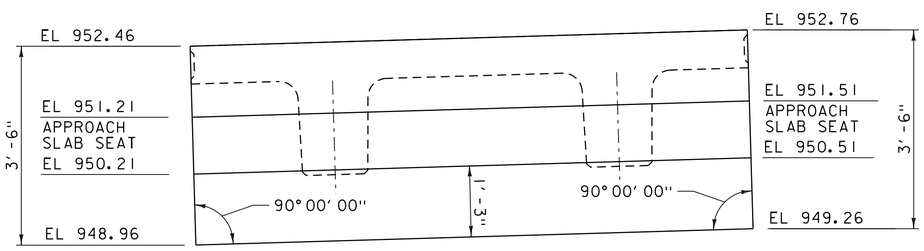

ABUTMENT NO 1, NEXT 2

SCALE 3/4" = 1'-0"

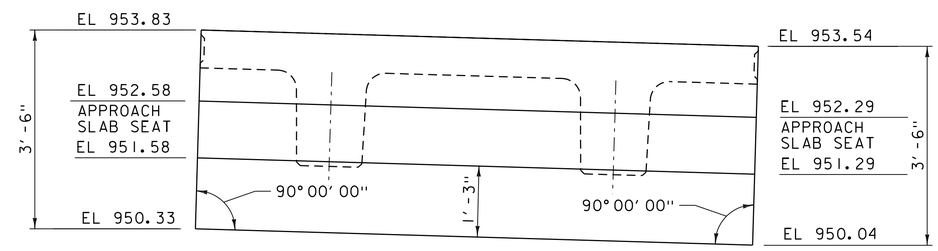

ABUTMENT NO 2, NEXT 2

SCALE 3/4" = 1'-0"

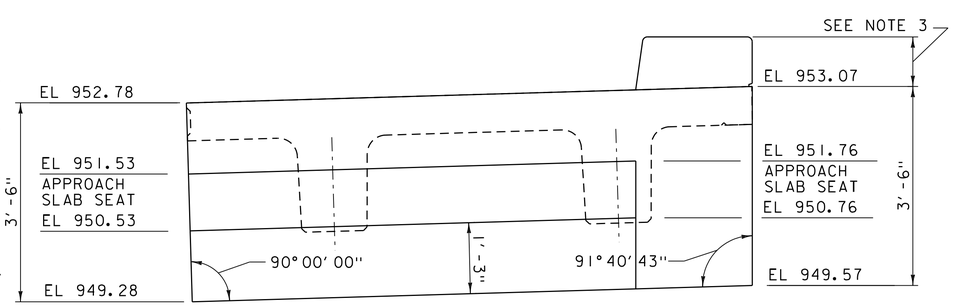

ABUTMENT NO 1, NEXT 3

SCALE 3/4" = 1'-0"

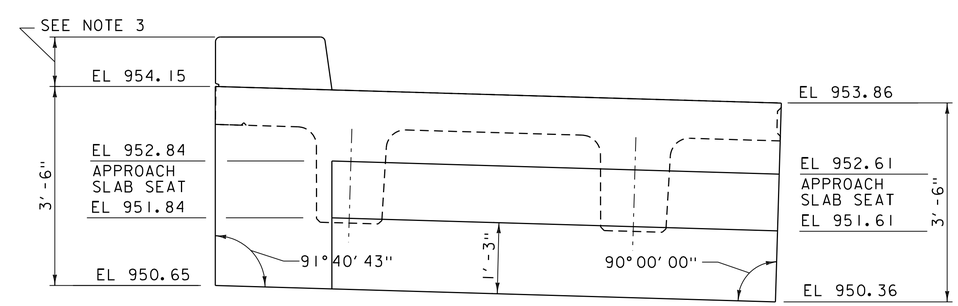

ABUTMENT NO 2, NEXT 3

SCALE 3/4" = 1'-0"

NOTES:

1. SEE BR 16 CURTAIN WALL DETAILS SHEET (1 OF 2) FOR HORIZONTAL DIMENSIONS AND CURTAIN WALL LIMITS.
2. SEE BR 16 NEXT BEAM DETAILS SHEET (3 OF 3) FOR PRECAST CURTAIN WALL SECTION AND REINFORCING INFORMATION.
3. SEE CURB HEIGHT DETAIL ON BR 16 NEXT BEAM DETAILS SHEET (2 OF 3).

REVISION	DESCRIPTION	DATE
1	ELEVATION CHANGES	6/11/2014

PROJECT NAME: ROCHESTER

PROJECT NUMBER: BRF 0162(17)

Vanasse Hangen Brustlin, Inc.

FILE NAME: z85e035sup.dgn
PROJECT LEADER: G.S. GOODRICH
DESIGNED BY: G.S. GOODRICH
BR 16 CURTAIN WALL DETAILS (2 OF 2)

PLOT DATE: 6/9/2014
DRAWN BY: B.J. MASSE
CHECKED BY: L.S. CHERVINCKY
SHEET 152 OF 238

VHB 57527

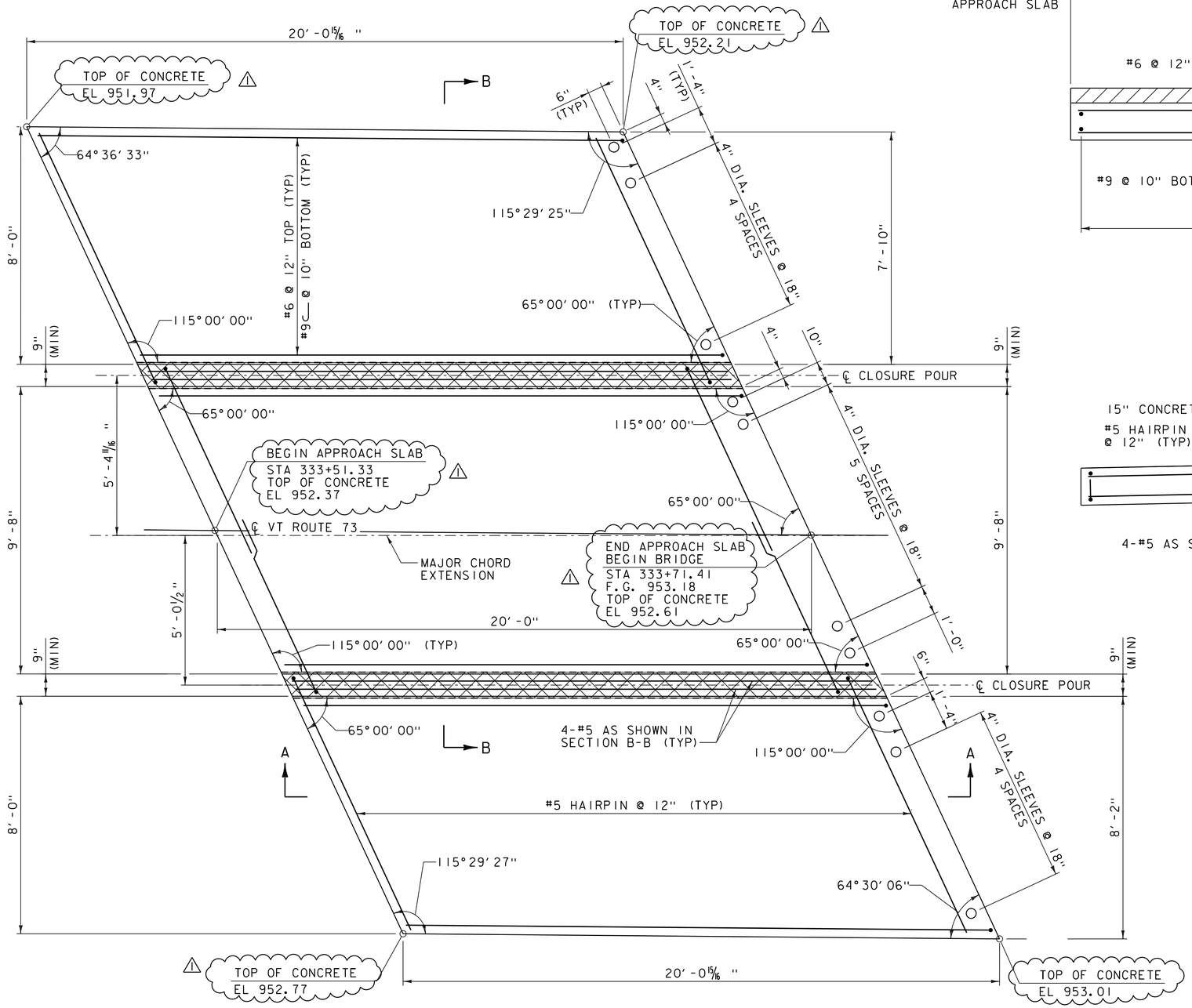

NOTE:

NF = NEAR FACE
FF = FAR FACE
EF = EACH FACE
▲ = CUT TO FIT IN FIELD
3" CLEAR, UNLESS OTHERWISE
SPECIFIED ON THE PLANS.
2' -2" BAR LAP UNLESS OTHERWISE
SPECIFIED ON THE PLANS.

APPROACH SLAB NO 1 PLAN

SCALE 1/2" = 1' -0"

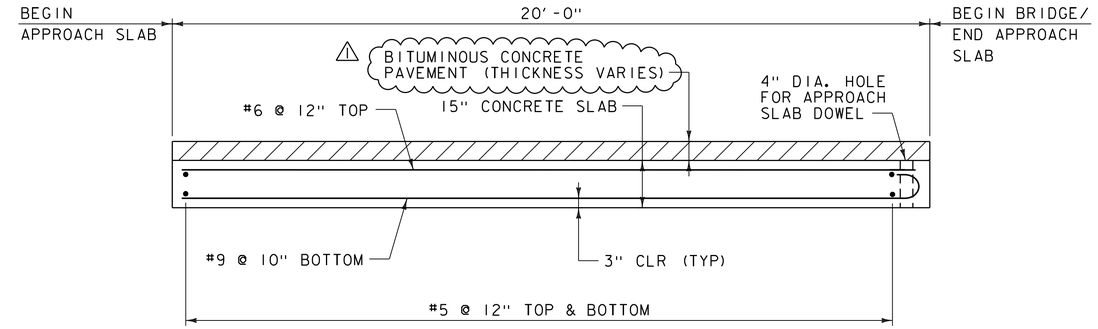

SECTION A-A

SCALE 1/2" = 1' -0"

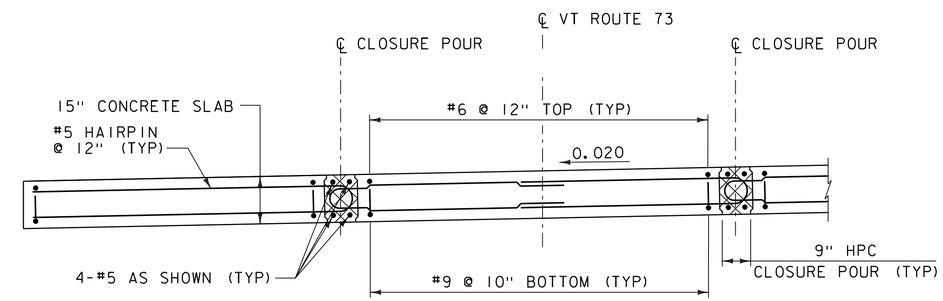

SECTION B-B

SCALE 1/2" = 1' -0"

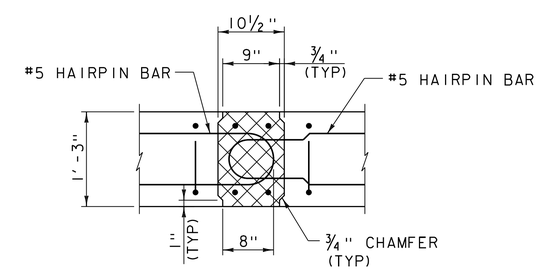

JOINT DETAIL

SCALE 1" = 1' -0"

NOTES:

1. LIFTING POINTS IN APPROACH SLABS TO BE LOCATED BY FABRICATOR.
2. 4" DIA. SLEEVES FOR APPROACH SLAB DOWELS ARE LOCATED TO AVOID JOINTS IN PRECAST CURTAIN WALLS. SEE BR 16 CURTAIN WALL SHEET (1 OF 2).
3. CONTRACTOR SHALL PROVIDE METHOD AND DETAILS FOR ESTABLISHING CONTINUOUS CONTACT WITH SUBGRADE AND SUPPORT FOR PRECAST APPROACH SLABS WITH SHOP DRAWINGS.

REVISION	DESCRIPTION	DATE
1	ELEVATION CHANGES	6/19/2014

PROJECT NAME: ROCHESTER
PROJECT NUMBER: BRF 0162(17)

Vanasse Hangen Brustlin, Inc.

FILE NAME: z85e035slab.dgn
PROJECT LEADER: G.S. GOODRICH
DESIGNED BY: E.A. FIALA
BR 16 PRECAST APPROACH SLAB (1 OF 2)
PLOT DATE: 6/18/2014
DRAWN BY: E.A. FIALA
CHECKED BY: L.S. CHERVINCKY
SHEET 154 OF 238

VHB 57527

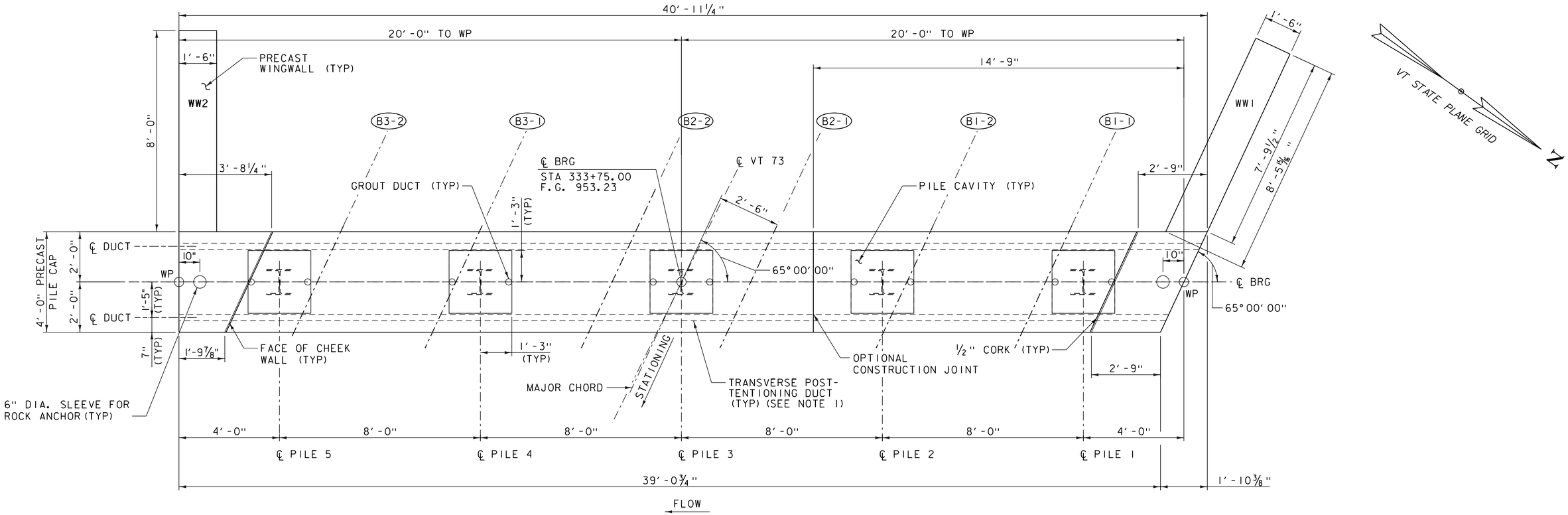

ABUTMENT NO 1 PLAN

SCALE ½" = 1'-0"

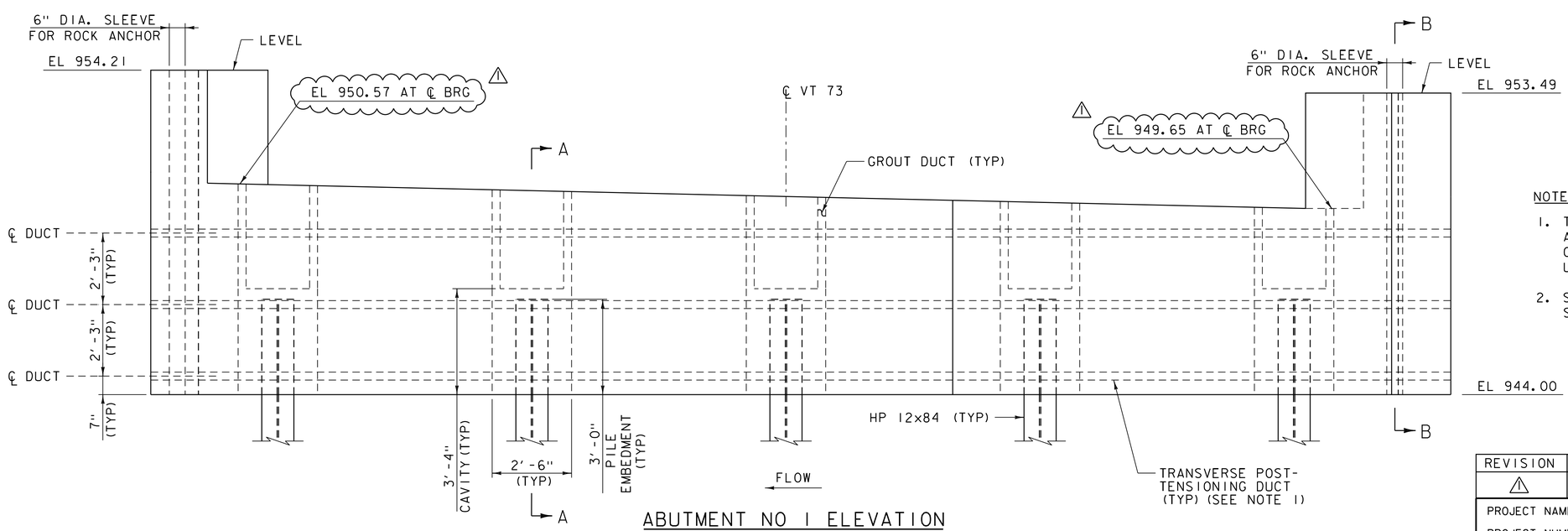

ABUTMENT NO 1 ELEVATION

SCALE ½" = 1'-0"

NOTES:

1. TRANSVERSE POST-TENSIONING AND ASSOCIATED ITEMS ONLY REQUIRED IF PILE CAP IS CONSTRUCTED OF MORE THAN ONE UNIT.
2. SEE BR 16 ABUTMENT DETAILS SHEET FOR SECTIONS A-A AND B-B.

REVISION	DESCRIPTION	DATE
1	ELEVATION CHANGES	6/11/2014

PROJECT NAME: ROCHESTER
PROJECT NUMBER: BRF 0162(17)

FILE NAME: z85e035sub.dgn
PROJECT LEADER: G.S. GOODRICH
DESIGNED BY: E.A. FIALA
BR 16 ABUTMENT NO 1 PLAN & ELEVATION

PLOT DATE: 6/9/2014
DRAWN BY: B.J. MASSE
CHECKED BY: L.S. CHERVINCKY
SHEET 156 OF 238

VHB Vanasse Hangen Brustlin, Inc.

VHB 57527