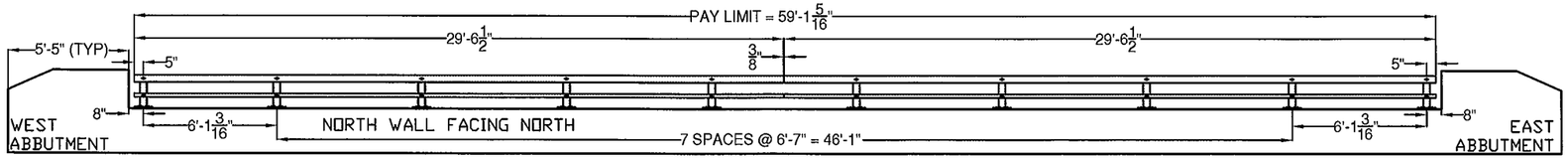

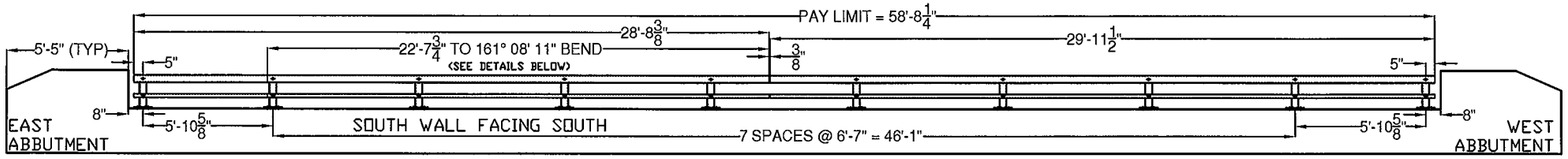

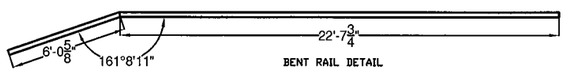

BENT RAIL DETAIL

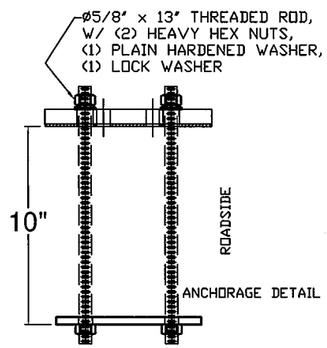

ANCHORAGE DETAIL

ALTERNATE ANCHORAGE DETAIL SHOWN (THREADED ROD) PER PREVIOUSLY APPROVED JOB (JAMAICA ER BRF 015-1 (23))

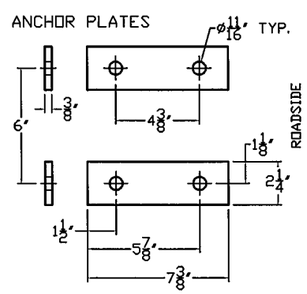

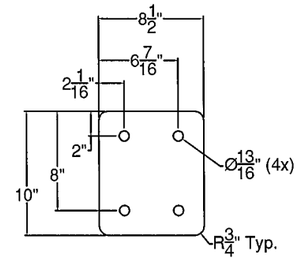

1/8" Fabreeka Pad

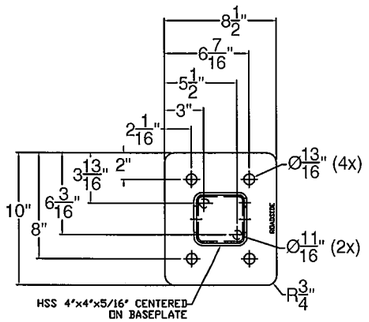

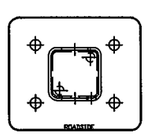

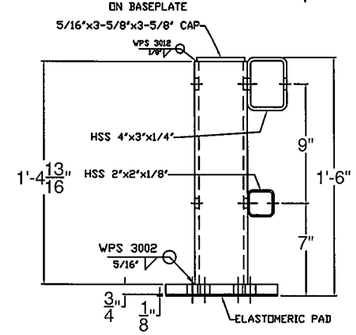

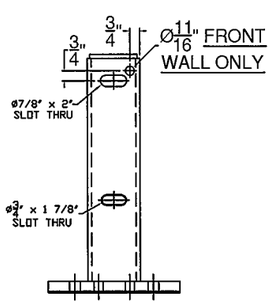

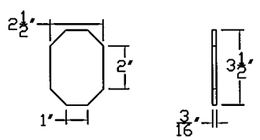

Welded to 4"x3" Tube

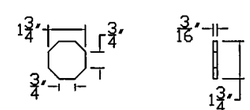

Welded to 2"x2" Tube

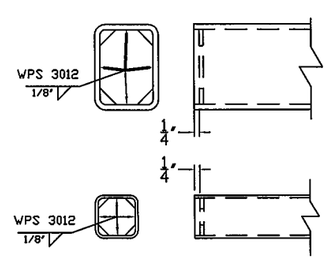

END OF RAIL DETAIL

BILL OF MATERIAL

ITEM #	QTY	PART #	DESCRIPTION	ASTM DESIGNATION
1	20	0033.90017	TWO RAIL POST & BASEPLATE ASSEMBLY	A572 Gr. 50
2	2	0033.91117	4" X 3" X 1/4" RAIL @ 29'-6 1/2" W/ END PLATE (NORTH RAIL)	A500 Gr. B
3	1	0033.91118	4" X 3" X 1/4" RAIL @ 29'-11 1/2" W/ END PLATE (SOUTH RAIL)	A500 Gr. B
4	1	0033.91119	4" X 3" X 1/4" RAIL @ 28'-8 3/8" W/ BEND (SOUTH RAIL) W/ END PL	A500 Gr. B
5	2	0033.91120	2" X 2" X 1/8" RAIL @ 29'-6 1/2" W/ END PLATE (NORTH RAIL)	A500 Gr. B
6	1	0033.91121	2" X 2" X 1/8" RAIL @ 29'-11 1/2" W/ END PLATE (SOUTH RAIL)	A500 Gr. B
7	1	0033.91122	2" X 2" X 1/8" RAIL @ 28'-8 3/4" W/ BEND (SOUTH RAIL) W/ END PL	A500 Gr. B
8	2	0033.90069	1-1/2" X 1-1/2" FIX. SPL BAR @ 2' 4"	A572 Gr. 50
9	2	0033.90071	2-1/4" X 3-1/4" FIX. SPL. BAR @ 2' 4"	A572 Gr. 50
10	40	0033.00295	3/8" X 2 1/4" X 7 3/8" ANCHOR PLATES	A36
11	80	0042.05813	ø 5/8" X 13" ANCHOR STUDS	A449
12	160	0080.15901	ø 5/8" HEAVY HEX NUTS	A563
13	80	0080.15911	ø 5/8" FLAT WASHERS	F436
14	80	0080.15920	ø 5/8" LOCK WASHERS	ASME D18.2
15	20	0080.05560	ø 5/8" X 7 1/2" ROUND HEAD BOLT, NUT, F.W., & L.W.	A325, A563, F436, & ASME D1
16	20	0080.05585	ø 3/4" X 8 1/2" ROUND HEAD BOLT, NUT, F.W., & L.W.	A325, A563, F436, & ASME D1
17	8	0080.05275	ø 5/8" X 3" HEX BOLT, NUT, F.W., & L.W.	A325, A563, F436, & ASME D1
18	8	0080.07330	ø 7/8" X 5 1/2" HEX BOLT, NUT, F.W., & L.W.	A325, A563, F436, & ASME D1
19	20	0033.90068	1/8" ELASTOMERIC PAD	D2240

POWDER COATED BLACK

NOTES:

1. ALL WORK AND MATERIALS SHALL CONFORM TO SECTION 525.
2. PRIOR TO GALVANIZING THE ASSEMBLED POST, GRIND ALL EDGES TO A MINIMUM RADIUS OF 1/16".
3. ALL POSTS SHALL BE SET NORMAL TO GRADE.
4. SECTIONS OF RAIL TUBE SHALL BE ATTACHED TO A MINIMUM OF TWO BRIDGE POSTS AND PREFERABLY TO AT LEAST 4 POSTS.
5. HOLES IN RAILS FOR TUBE ATTACHMENT, WILL BE SHOP-DRILLED.
6. BOLTS SHALL BE TORQUED SNUG TIGHT (APPROXIMATELY 100 FT-LB).
7. RAIL TUBES SHALL BE ATTACHED USING 3/4" FULL DIAMETER BODY ASTM A449 (TYPE I) ROUND HEAD BOLTS INSERTED THROUGH THE FACE OF THE TUBE.
8. SEE STANDARD DRAWING G-I FOR DETAILS OF DELINEATORS. A DELINEATOR SHALL BE INSTALLED AT 30 FOOT SPACING OR THE NEAREST POST. WHITE IS TO BE INSTALLED ON THE DRIVER'S RIGHT. FOR ONE WAY BRIDGES, YELLOW IS TO BE INSTALLED ON THE DRIVER'S LEFT. PAYMENT FOR DELINEATORS SHALL BE INCIDENTAL TO OTHER ITEMS.
9. THIS RAILING MEETS THE REQUIREMENTS FOR A NCHRP REPORT 350 TL-4 SERVICE LEVEL.
10. ALL STEEL COMPONENTS SHALL BE POWDER COATED AFTER GALVANIZING. COLOR SHALL CONFORM TO ASTM D7803 (BLACK)

ITEM #: 900.640

SHEET 1 OF 2

APPROVED BY:

BRIDGE RAIL DETAILS SHEET

ROCHESTER, BRF 0162 (16) VT RTE 73 (MAJOR COLLECTOR), BRIDGE NO. 15, OVER BRANDON BROOK
TOWN OF ROCHESTER, COUNTY OF WINDSOR, VT

REV	NO.	DATE	DESCRIPTION	BY	REV	NO.	DATE	DESCRIPTION	BY

ELDERLEE, INC.
OAKS CORNERS, NEW YORK 14518
E-Mail: dlong@elderlee.com / epeek@elderlee.com
Tel: 315-789-6670 Fax: 315-789-6615

AISC CERTIFIED FABRICATOR

DRAWN	E.P.	5/6/14
CHECKED	D.L.	5/6/14
APPROVED	.	.
SCALE	SCHEMATIC	
DRAWING NO.	FR L - ROCH-BR15	

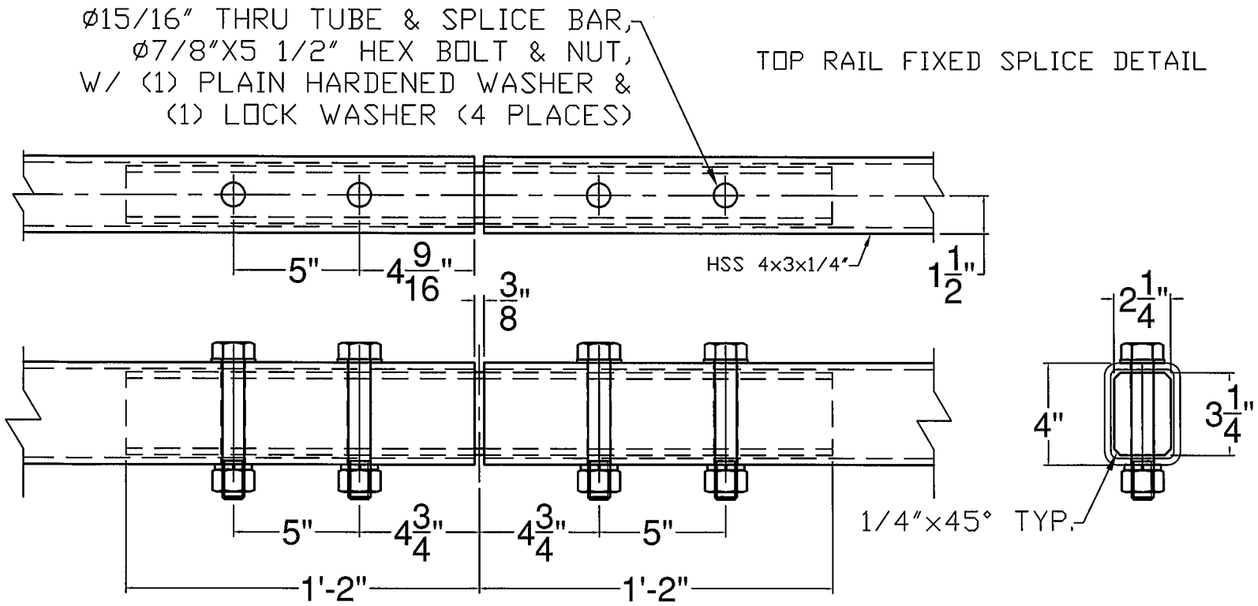

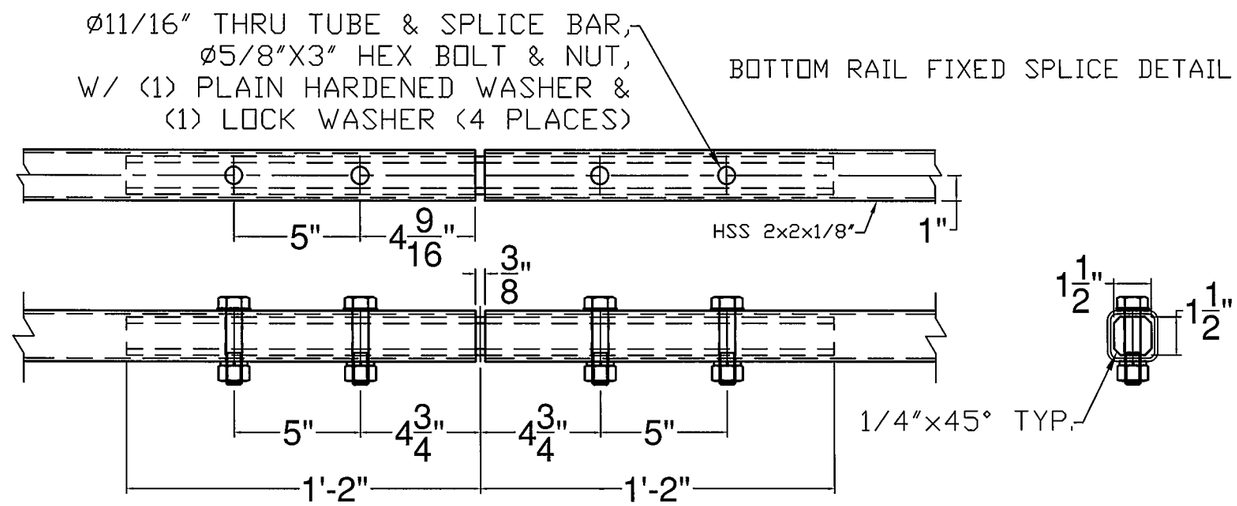

ITEM #: 900.640

SHEET 2 OF 2

APPROVED BY:

BRIDGE RAIL DETAILS SHEET

ROCHESTER, BRF 0162 (16) VT RTE 73 (MAJOR COLLECTOR), BRIDGE NO. 15, OVER BRANDON BROOK
TOWN OF ROCHESTER, COUNTY OF WINDSOR, VT

REV	NO.	DATE	DESCRIPTION	BY	REV	NO.	DATE	DESCRIPTION	BY

ELDERLEE, INC.
OAKS CORNERS, NEW YORK 14518
E-Mail: dlong@elderlee.com / epeek@elderlee.com
Tel: 315-789-6670 Fax: 315-789-6615

AISC CERTIFIED FABRICATOR

DRAWN	E.P.	5/6/14
CHECKED	D.L.	5/6/14
APPROVED	.	.
SCALE	SCHEMATIC	
DRAWING NO.	FR L - ROCH-BR15	

WELDING PROCEDURE SPECIFICATION

PQR ELDERLEE #3

Material Specification	A572 TO A572
Welding Process	FCAW-G
Manual or Machine	SEMAUTOMATIC
Position of Welding	FLAT/HORIZONTAL
Filler Metal Specification	A5.29
Filler Metal Classification	E81T1-Ni1C-JH4
Flux	N/A
Shielding Gas	CO 2 Dew Point -40DEG F Flow Rate 50CFH
Single or Multiple Pass	SINGLE
Single or Multiple Arc	SINGLE
Welding Current	DC ELECTRODE POSITIVE
Polarity	REVERSE
Welding Progression	STRINGER
Root Treatment	PER D1.5
Preheat and Interpass Temperature	PER D1.5
Postheat Temperature	NONE
Heat Input	Min _____ Max _____

WELDING PROCEDURE

Pass no.	Electrode size	Welding Current Amperes	Welding Current Volts	Travel speed	Joint detail
1	1/16	310	25	11	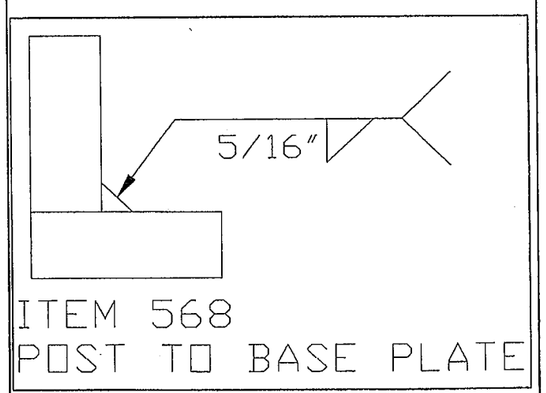
Variable	LIMITS	341 TO 269	27 TO 23	12 TO 10	

This procedure may vary due to fabrication sequence, fit-up, pass size, etc., within the limitation of variables given in Section 5.

Procedure No. 3002

Revision No. _____

Contractor Elderlee, Inc.

Authorized By RANDY SCOTT

Date 3/20/2014

WELDING PROCEDURE SPECIFICATION

PQR ELDERLEE #3

Material Specification	ASTM-A500-A53-GRADE B TO A36
Welding Process	FCAW-G
Manual or Machine	SEMAUTOMATIC
Position of Welding	FLAT/HORIZONTAL
Filler Metal Specification	A5.29
Filler Metal Classification	E81T1-Ni1C-JH4
Flux	N/A
Shielding Gas	CO 2 Dew Point -40DEG F FLOW RATE 50 CFH
Single or Multiple Pass	SINGLE
Single or Multiple Arc	SINGLE
Welding Current	DC
Polarity	REVERSE ELECTRODE POSITIVE
Welding Progression	STRINGER
Root Treatment	PER D1.5
Preheat and Interpass Temperature	PER. D1.5
Postheat Temperature	NONE
Heat Input	Min Max

WELDING PROCEDURE

Pass no.	Electrode size	Welding Current Amperes	Welding Current Volts	Travel speed	Joint detail
1	1/16	310	25	11	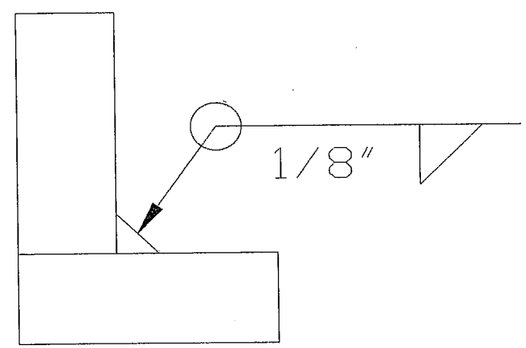
Variable	LIMITS	341 TO 269	27 TO 23	12 TO 10	

This procedure may vary due to fabrication sequence, fit-up, pass size, etc., within the limitation of variables given in Section 5.

Procedure No.	3012	Contractor	Elderlee, Inc.
Revision No.		Authorized By	RANDY SCOTT
		Date	3/20/2014