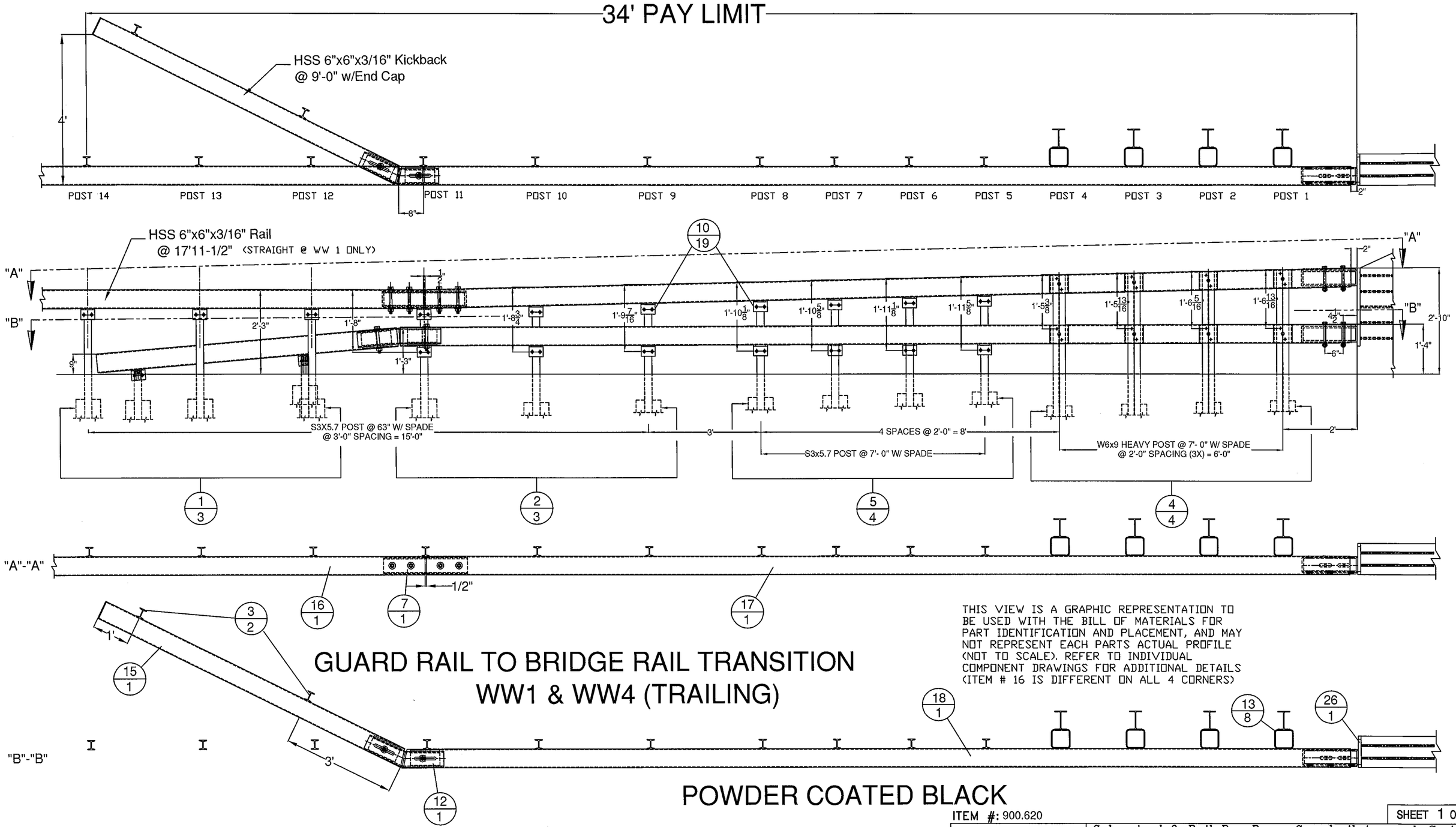

GUARD RAIL TO BRIDGE RAIL TRANSITION
WW1 & WW4 (TRAILING)

THIS VIEW IS A GRAPHIC REPRESENTATION TO BE USED WITH THE BILL OF MATERIALS FOR PART IDENTIFICATION AND PLACEMENT, AND MAY NOT REPRESENT EACH PARTS ACTUAL PROFILE (NOT TO SCALE). REFER TO INDIVIDUAL COMPONENT DRAWINGS FOR ADDITIONAL DETAILS (ITEM # 16 IS DIFFERENT ON ALL 4 CORNERS)

POWDER COATED BLACK

ITEM #: 900.620

SHEET 1 OF 7

APPROVED BY:

Galvanized 2-Rail Box Beam Guardrail Approach Section

ROCHESTER, BRF 0162 (16) VT RTE 73 (MAJOR COLLECTOR), BRIDGE NO. 15, OVER BRANDON BROOK
TOWN OF ROCHESTER, COUNTY OF WINDSOR, VT

REV	NO.	DATE	DESCRIPTION	BY
	1	6/10/14	REVISED PER 5/29/14 MARK-UP	E.P.

REV	NO.	DATE	DESCRIPTION	BY

ELDERLEE, INC.
OAKS CORNERS, NEW YORK 14518
E-Mail: dlong@elderlee.com / epeek@elderlee.com
Tel: 315-789-6670 Fax: 315-789-6615

AISC CERTIFIED FABRICATOR

DRAWN	E.P.	5/13/14
CHECKED	D.L.	
APPROVED	M.V.	
SCALE	SCHEMATIC	
DRAWING NO.	FR L - ROCHESTER TR15	

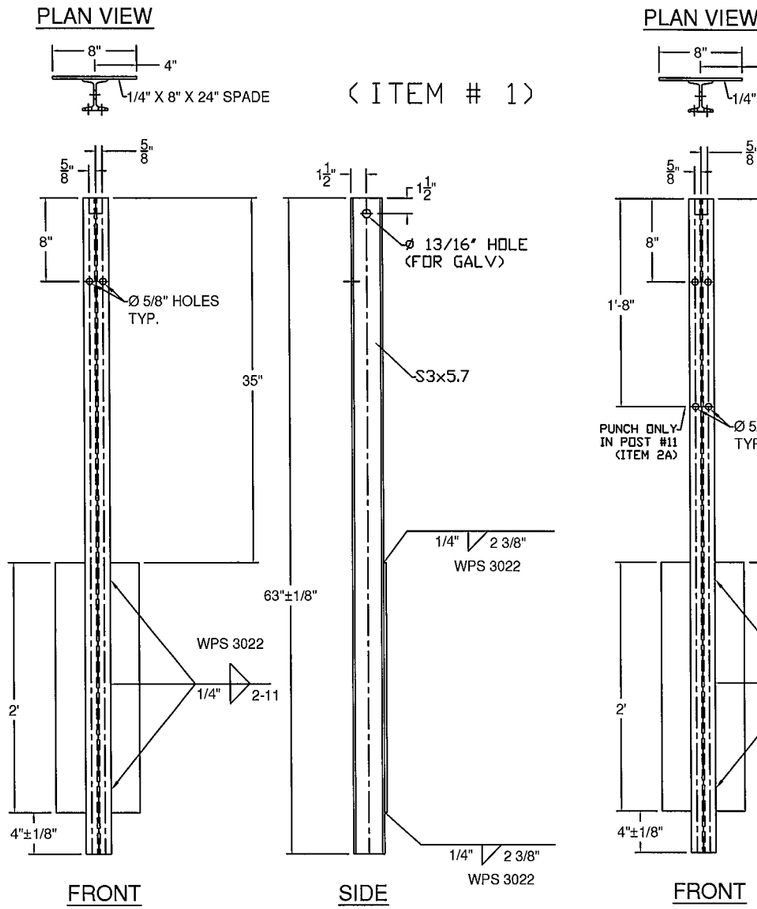

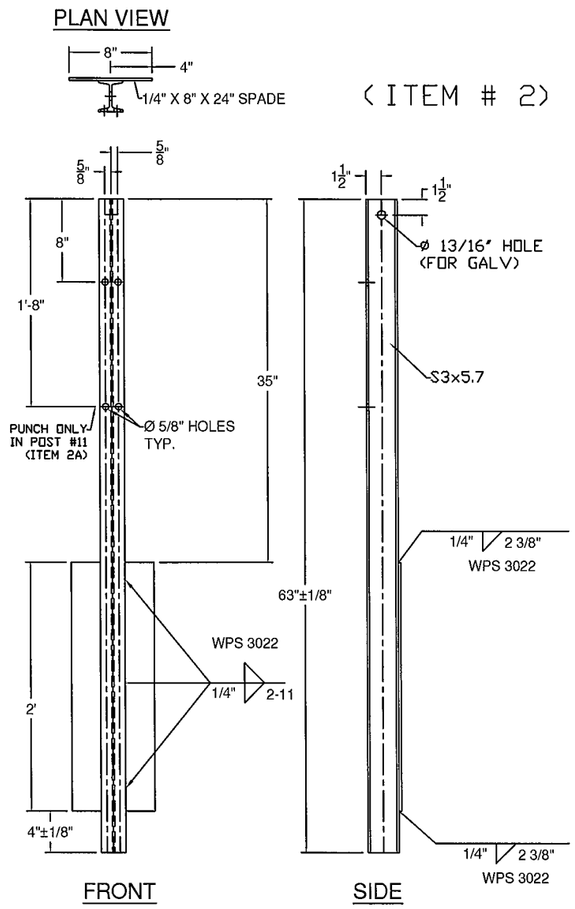

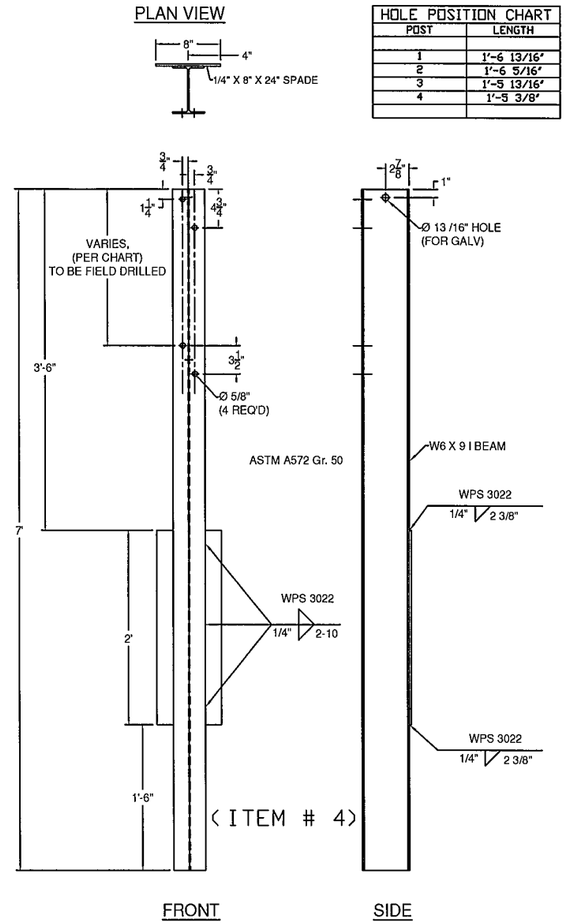

HOLE POSITION CHART	
POST	LENGTH
1	1'-6 13/16"
2	1'-6 5/16"
3	1'-5 13/16"
4	1'-5 3/8"

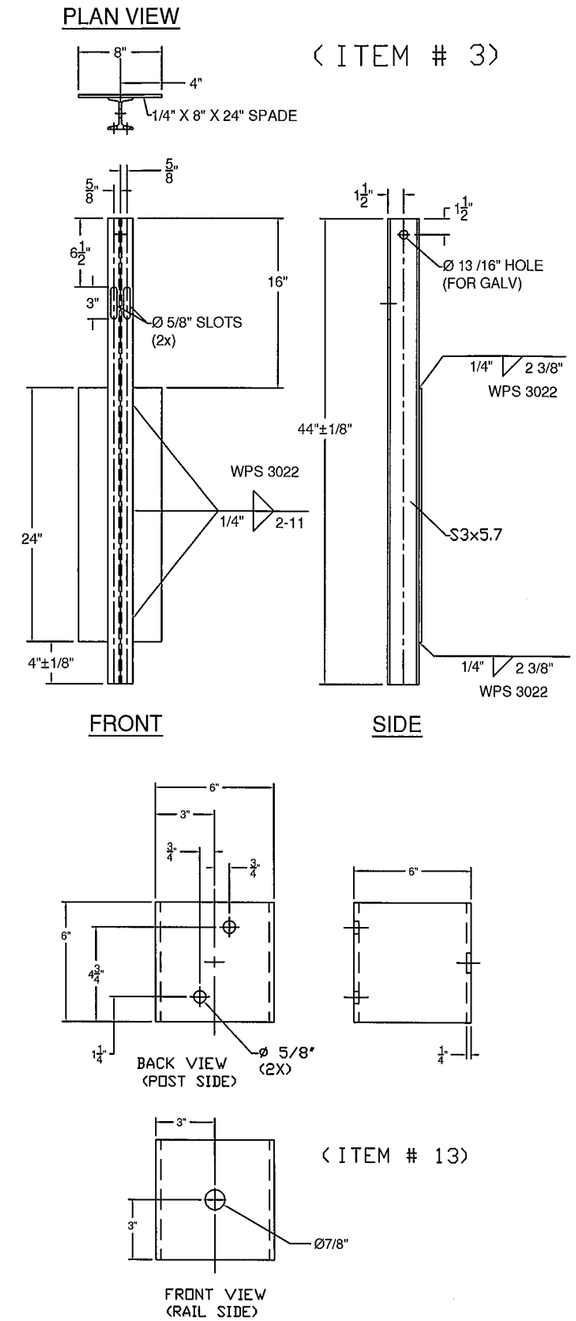

BILL OF MATERIALS			
ITEM #	QTY	DESCRIPTION	ASTM #
1	1	DBL TUBE WALL PLATE - 1' X 10' x 25'	ASTM A572 Gr. 50
2	10	RAW, Ø5/8' REBAR @ 24'	A615, Gr. 60
3	2	5' X 5' X 5/16' TUBE W/ SLOTS @ 18'	ASTM A500 Gr. B
4	2	SHIM PL 1/2' X 4' X 17' W/ SLOTS	ASTM A36(ASTM A709 Gr. 36)CVN
5	2	SHIM PL 1/2' X 4' X 17' (W/O SLOTS)	ASTM A36(ASTM A709 Gr. 36)CVN

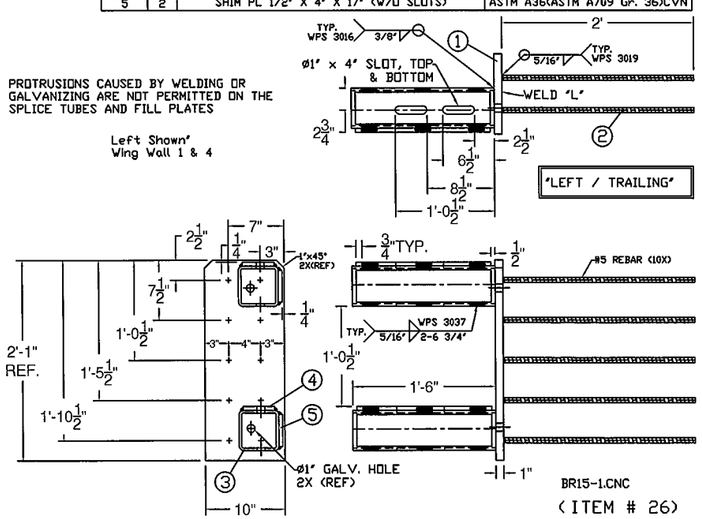

BILL OF MATERIALS			
ITEM #	QTY	DESCRIPTION	ASTM #
1	1	DBL TUBE WALL PLATE - 1' X 10' x 25'	ASTM A572 Gr. 50
2	10	RAW, Ø5/8' REBAR @ 24'	A615, Gr. 60
3	2	5' X 5' X 5/16' TUBE W/ SLOTS @ 18'	ASTM A500 Gr. B
4	2	SHIM PL 1/2' X 4' X 17' W/ SLOTS	ASTM A36(ASTM A709 Gr. 36)CVN
5	2	SHIM PL 1/2' X 4' X 17' (W/O SLOTS)	ASTM A36(ASTM A709 Gr. 36)CVN

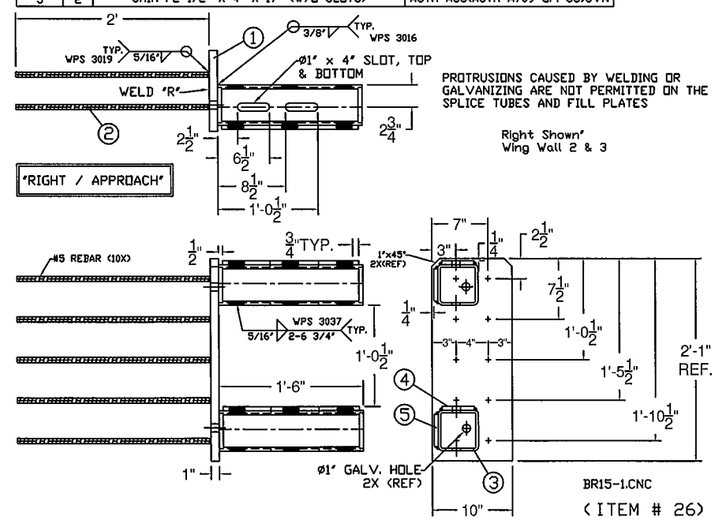

ITEM #: 900.620

APPROVED BY:

SHEET 2 OF 7

Galvanized 2-Rail Box Beam Guardrail Approach Section

ROCHESTER, BRF 0162 (16) VT RTE 73 (MAJOR COLLECTOR), BRIDGE NO. 15, OVER BRANDON BROOK
TOWN OF ROCHESTER, COUNTY OF WINDSOR, VT

R E V	NO.	DATE	DESCRIPTION	BY
	1	6/10/14	REVISED PER 5/29/14 MARK-UP	E.P.

R E V	NO.	DATE	DESCRIPTION	BY

ELDERLEE, INC.
OAKS CORNERS, NEW YORK 14518
E-Mail: dlong@elderlee.com / epeek@elderlee.com
Tel: 315-789-6670 Fax: 315-789-6615

AISC CERTIFIED FABRICATOR

DRAWN	E.P.	5/13/14
CHECKED	D.L.	
APPROVED	M.V.	
SCALE	SCHEMATIC	
DRAWING NO.	FR L - ROCHESTER TR15	

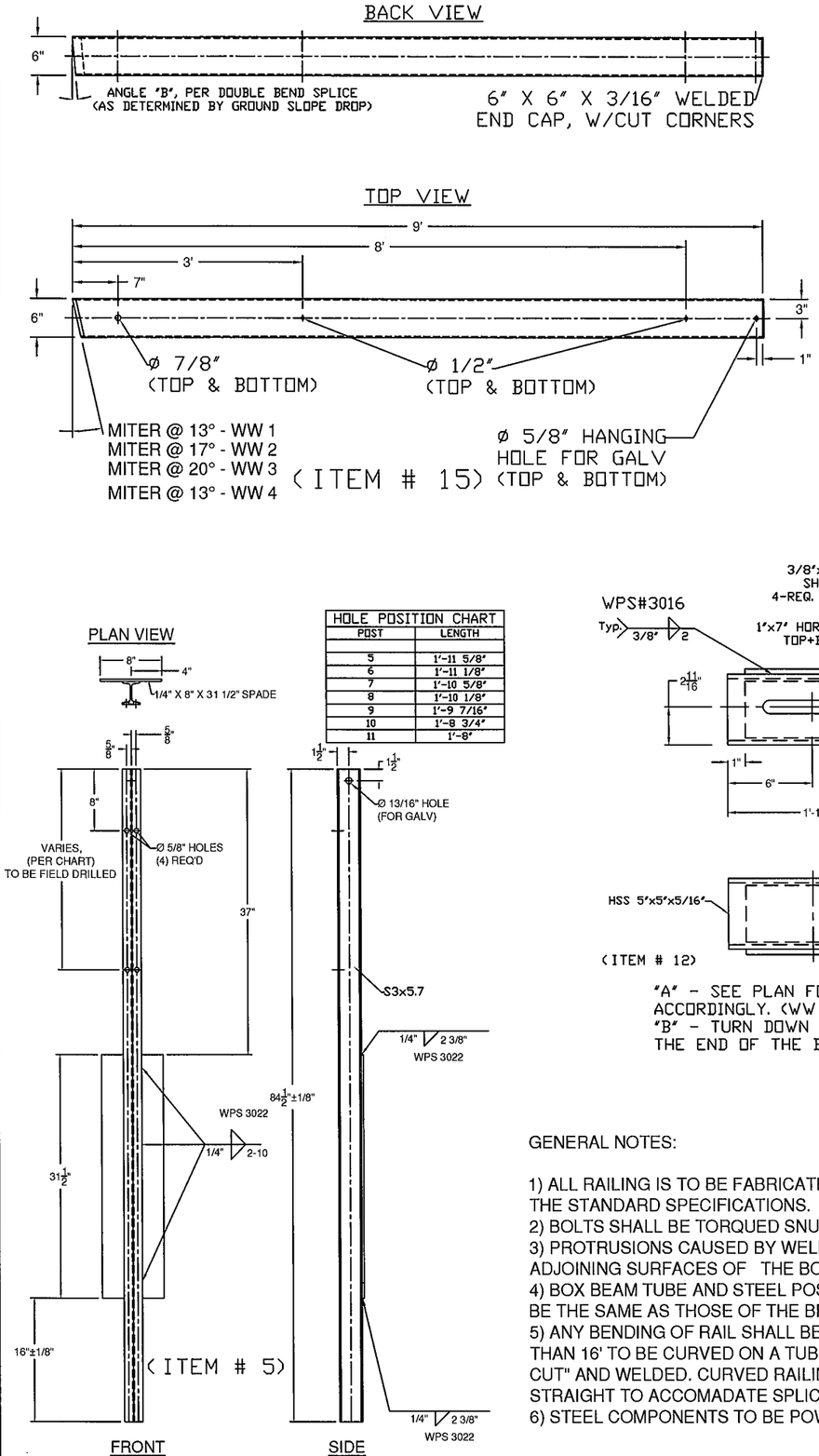

GENERAL NOTES:

1) ALL RAILING IS TO BE FABRICATED AND ERECTED ACCORDING TO SECTION 525 OF THE STANDARD SPECIFICATIONS.
2) BOLTS SHALL BE TORQUED SNUG TIGHT (APPROXIMATELY 100 FT-LB).
3) PROTRUSIONS CAUSED BY WELDING OR GALVANIZING ARE NOT PERMITTED ON THE ADJOINING SURFACES OF THE BOX BEAM RAILS, SPLICE TUBES AND FILL PLATES.
4) BOX BEAM TUBE AND STEEL POST MATERIALS, DIMENSION SIZES AND NOTES SHALL BE THE SAME AS THOSE OF THE BRIDGE RAIL, UNLESS OTHERWISE NOTED.
5) ANY BENDING OF RAIL SHALL BE DONE AT THE FABRICATION PLANT. RADII GREATER THAN 16' TO BE CURVED ON A TUBE BENDING MACHINE, RADII LESS THAN 16' TO BE "PIE CUT" AND WELDED. CURVED RAILING WILL HAVE AN 18" LENGTH ON EACH END STRAIGHT TO ACCOMADATE SPLICES.
6) STEEL COMPONENTS TO BE POWDER COATED BLACK PER ASTM D7803 AFTER GALV.

ITEM #: 900.620

SHEET 3 OF 7

APPROVED BY:

Galvanized 2-Rail Box Beam Guardrail Approach Section

ROCHESTER, BRF 0162 (16) VT RTE 73 (MAJOR COLLECTOR), BRIDGE NO. 15, OVER BRANDON BROOK
TOWN OF ROCHESTER, COUNTY OF WINDSOR, VT

REV	NO.	DATE	DESCRIPTION	BY
1	1	6/10/14	REVISED PER 5/29/14 MARK-UP	E.P.

REV	NO.	DATE	DESCRIPTION	BY

ELDERLEE, INC.
OAKS CORNERS, NEW YORK 14518
E-Mail: dlong@elderlee.com / epeek@elderlee.com
Tel: 315-789-6670 Fax: 315-789-6615

CERTIFIED FABRICATOR

DRAWN	E.P.	5/13/14
CHECKED	D.L.	
APPROVED	M.V.	
SCALE	SCHEMATIC	
DRAWING NO.	FR L - ROCHESTER TR15	

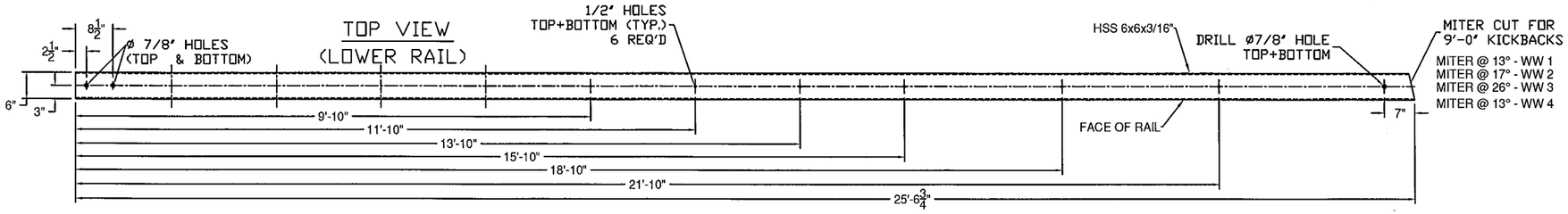

WW1, 3, & 4

(ITEM # 18)

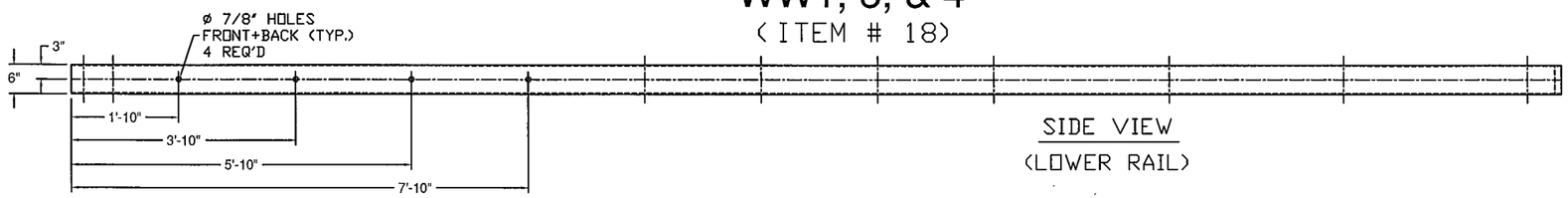

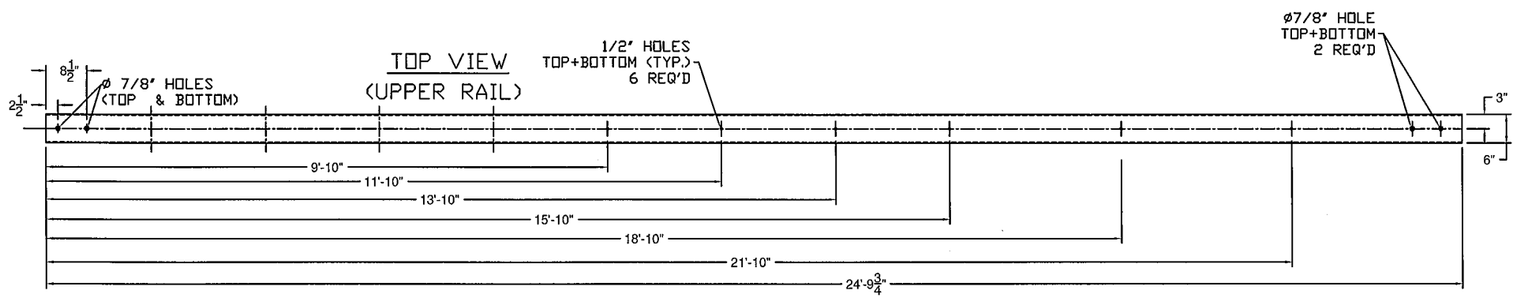

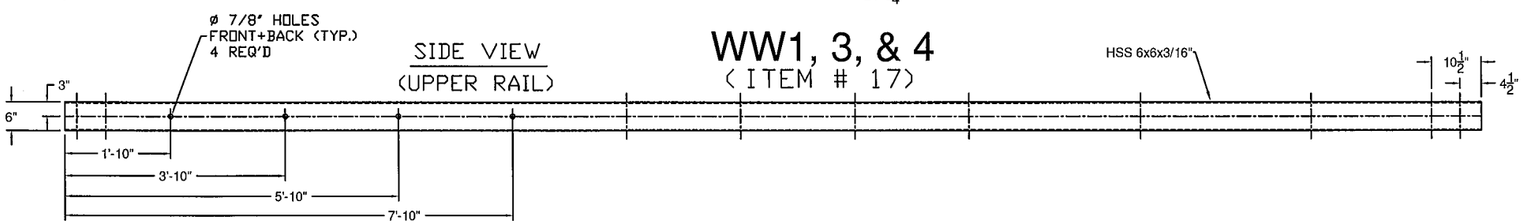

WW1, 3, & 4

(ITEM # 17)

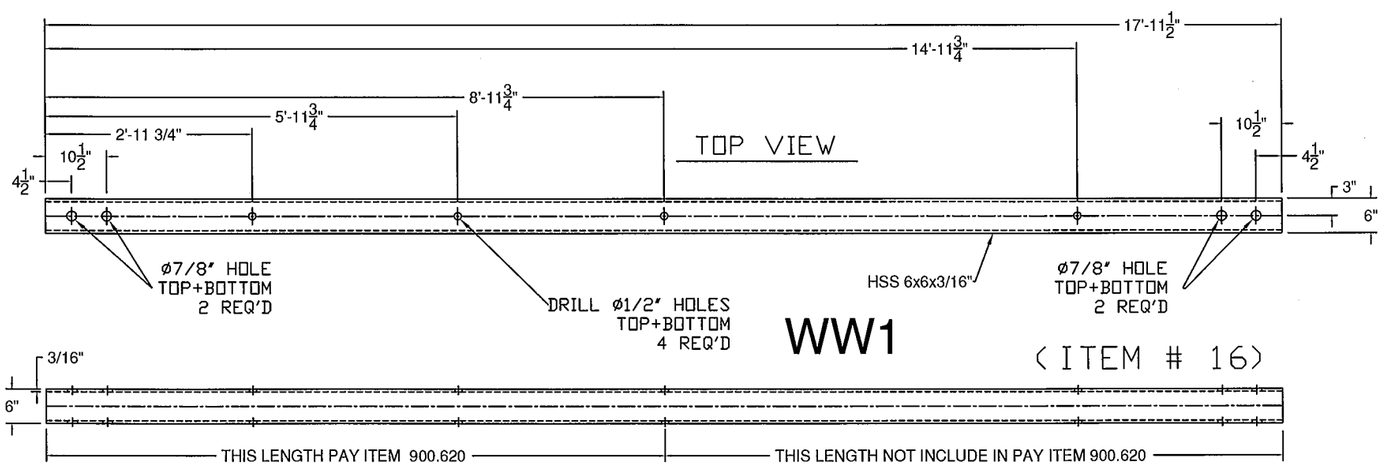

WW1

(ITEM # 16)

ITEM #: 900.620

SHEET 4 OF 7

APPROVED BY:

Galvanized 2-Rail Box Beam Guardrail Approach Section

ROCHESTER, BRF 0162 (16) VT RTE 73 (MAJOR COLLECTOR), BRIDGE NO. 15, OVER BRANDON BROOK
TOWN OF ROCHESTER, COUNTY OF WINDSOR, VT

REV	NO.	DATE	DESCRIPTION	BY	REV	NO.	DATE	DESCRIPTION	BY
	1	6/10/14	REVISED PER 5/29/14 MARK-UP	E.P.					

ELDERLEE, INC.
OAKS CORNERS, NEW YORK 14518
E-Mail: dlong@elderlee.com / epeek@elderlee.com
Tel: 315-789-6670 Fax: 315-789-6615

AISC CERTIFIED FABRICATOR

DRAWN	E.P.	5/13/14
CHECKED	D.L.	
APPROVED	M.V.	.
SCALE	SCHEMATIC	
DRAWING NO.	FR L - ROCHESTER TR15	

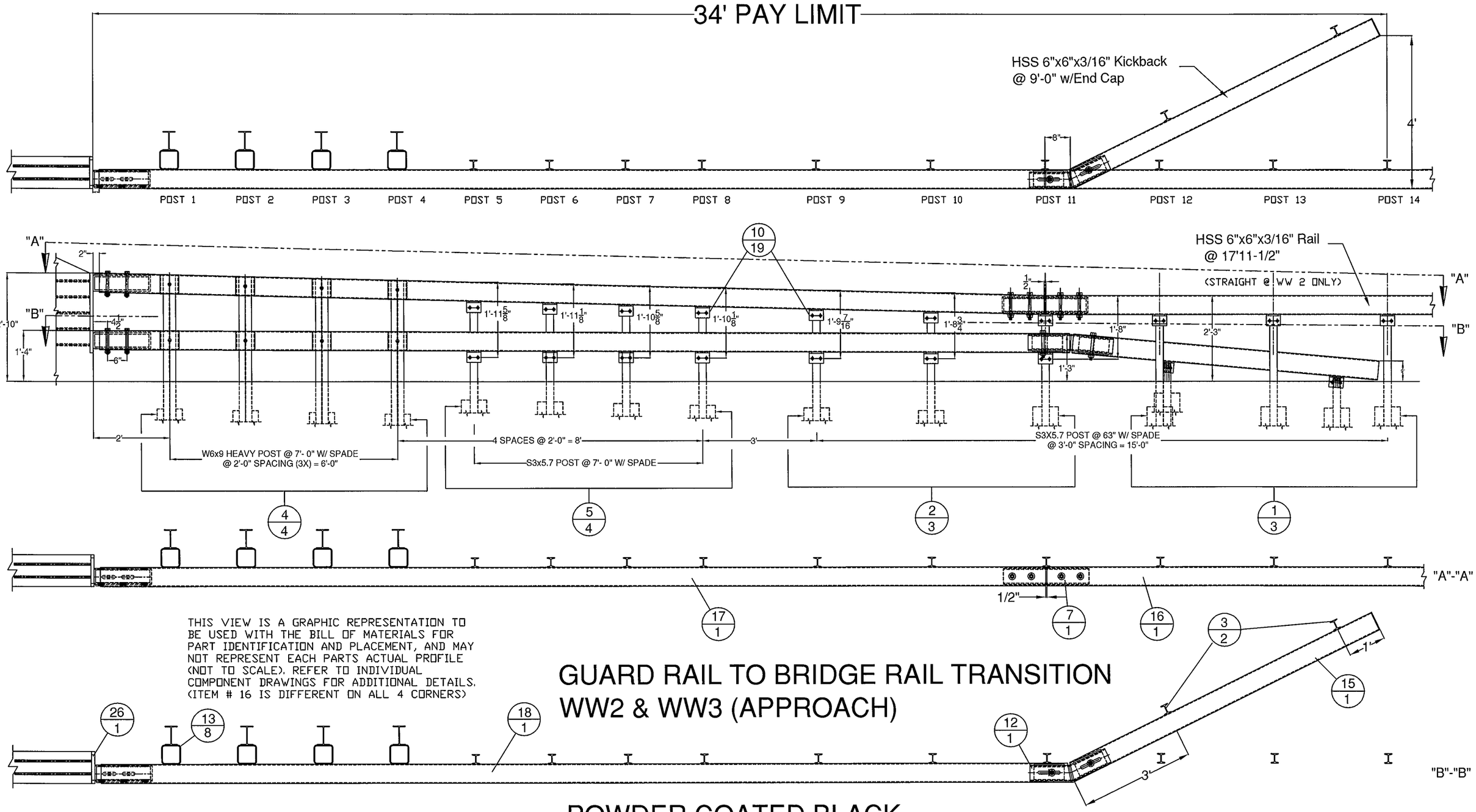

THIS VIEW IS A GRAPHIC REPRESENTATION TO BE USED WITH THE BILL OF MATERIALS FOR PART IDENTIFICATION AND PLACEMENT, AND MAY NOT REPRESENT EACH PARTS ACTUAL PROFILE (NOT TO SCALE). REFER TO INDIVIDUAL COMPONENT DRAWINGS FOR ADDITIONAL DETAILS. (ITEM # 16 IS DIFFERENT ON ALL 4 CORNERS)

GUARD RAIL TO BRIDGE RAIL TRANSITION
WW2 & WW3 (APPROACH)

POWDER COATED BLACK

ITEM #: 900.620

SHEET 5 OF 7

APPROVED BY:

Galvanized 2-Rail Box Beam Guardrail Approach Section

ROCHESTER, BRF 0162 (16) VT RTE 73 (MAJOR COLLECTOR), BRIDGE NO. 15, OVER BRANDON BROOK
TOWN OF ROCHESTER, COUNTY OF WINDSOR, VT

REV	NO.	DATE	DESCRIPTION	BY
	1	6/10/14	REVISED PER 5/29/14 MARK-UP	E.P.

REV	NO.	DATE	DESCRIPTION	BY

ELDERLEE, INC.
OAKS CORNERS, NEW YORK 14518
E-Mail: dlong@elderlee.com / speek@elderlee.com
Tel: 315-789-6670 Fax: 315-789-6615

CERTIFIED FABRICATOR

DRAWN	E.P.	5/13/14
CHECKED	D.L.	
APPROVED	M.V.	
SCALE	SCHEMATIC	
DRAWING NO.	FR L - ROCHESTER TR15	

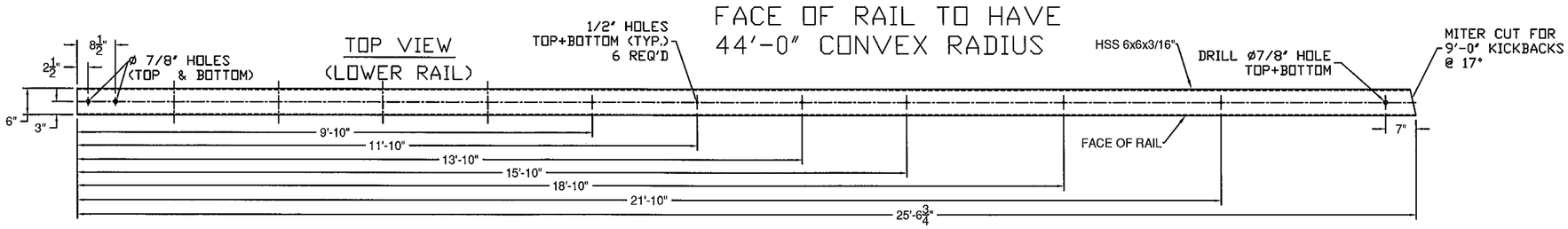

WW2

(ITEM # 18)

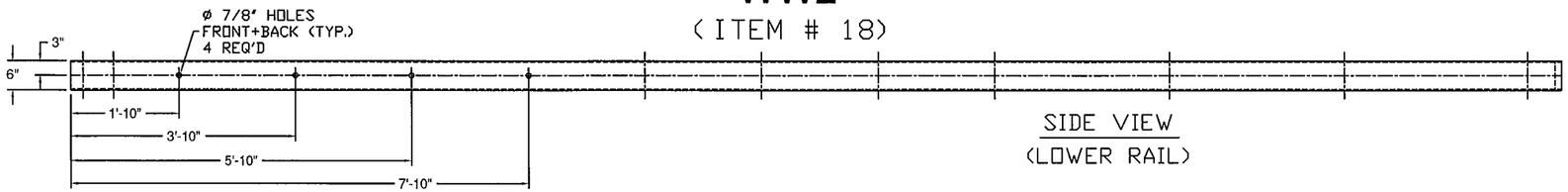

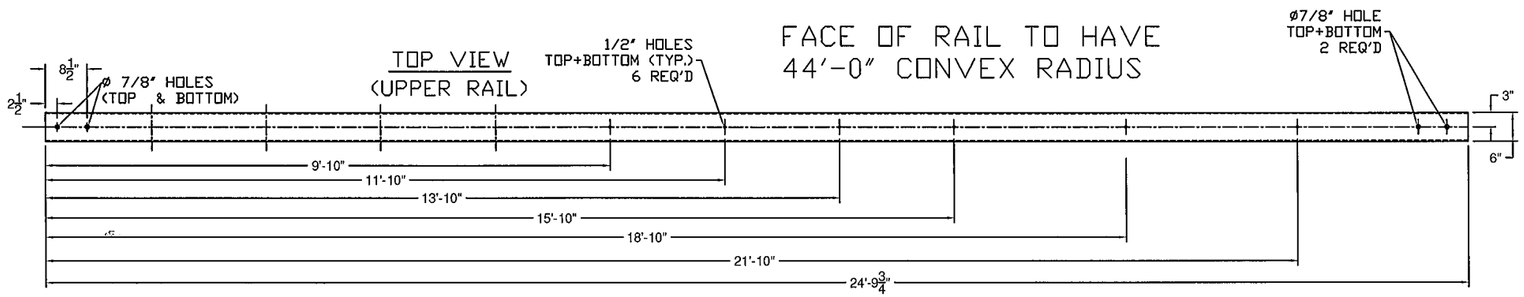

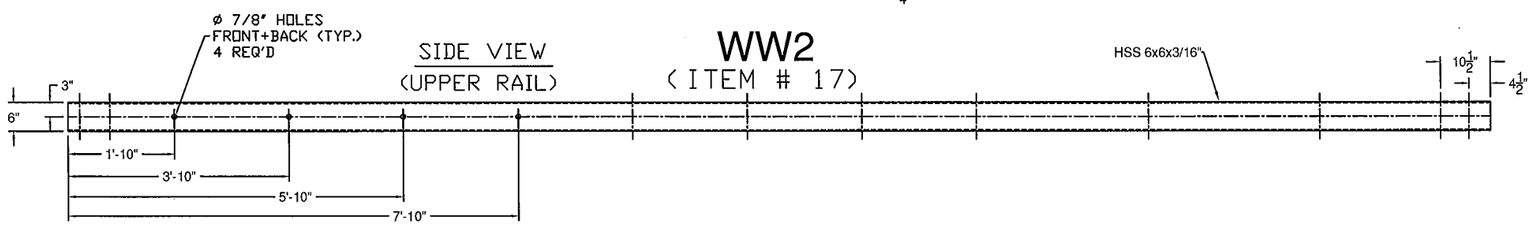

WW2

(ITEM # 17)

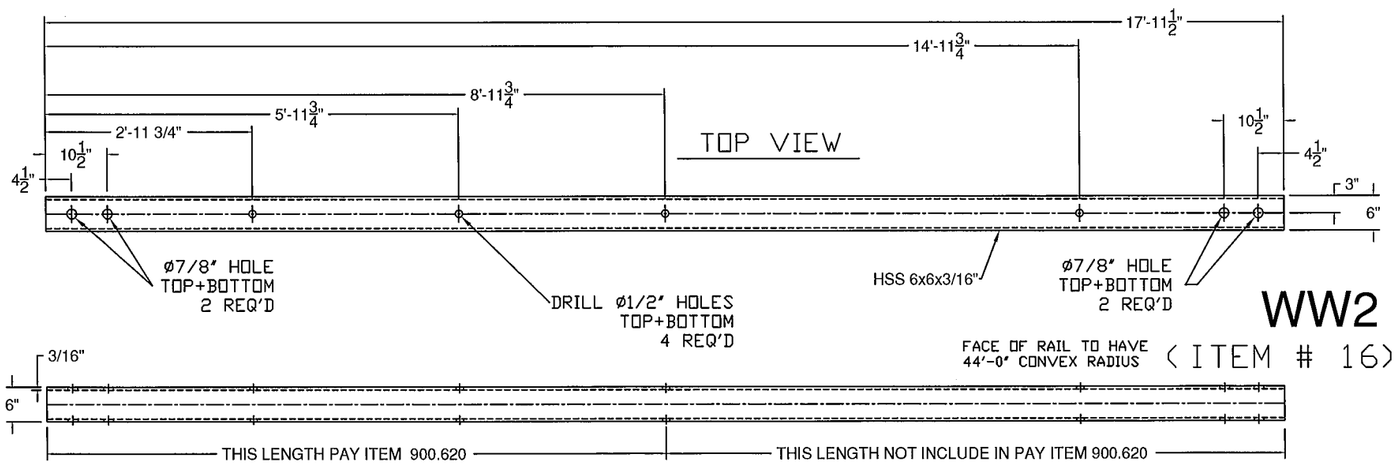

WW2

(ITEM # 16)

ITEM #: 900.620

SHEET 6 OF 7

APPROVED BY:

Galvanized 2-Rail Box Beam Guardrail Approach Section

ROCHESTER, BRF 0162 (16) VT RTE 73 (MAJOR COLLECTOR), BRIDGE NO. T5, OVER BRANDON BROOK
TOWN OF ROCHESTER, COUNTY OF WINDSOR, VT

REV	NO.	DATE	DESCRIPTION	BY
	1	6/10/14	REVISED PER 5/29/14 MARK-UP	E.P.

REV	NO.	DATE	DESCRIPTION	BY

ELDERLEE, INC.
OAKS CORNERS, NEW YORK 14518
E-Mail: dlong@elderlee.com / epeek@elderlee.com
Tel: 315-789-6670 Fax: 315-789-6615

AISC CERTIFIED FABRICATOR

DRAWN	E.P.	5/13/14
CHECKED	D.L.	
APPROVED	M.V.	
SCALE	SCHEMATIC	
DRAWING NO.	FR L - ROCHESTER TR15	

BILL OF MATERIALS, WW 1

ITEM #	QTY.	COMPONENT #	DESCRIPTION	MATERIAL (ASTM)
1	3	0013.57021	3" I-POST, PUNCH 8" W/SPD @ 63" LG	ASTM A572 Gr. 50
2	3	0013.57025	3" I-POST, PUNCH 8", & 20" W/SPD @ 63" LG	ASTM A572 Gr. 50
3	2	0013.57060	3" I-END POST W/SPD @ 3'-8" LG	ASTM A572 Gr. 50
4	4		W6X9 POST @ 7' W/SPD & 5/8" HOLES @ VARIOUS	ASTM A572 Gr. 50
5	4		3" I-POST, PUNCH 8" & VARIOUS", W/8X32" SPADE @7'	ASTM A572 Gr. 50
7	1	0033.00640	HSS 5X5 TUBE SPLICE @27" LG W/ 1/4" SHIMS	A500 Gr. B / A572 Gr 50
10	19	0054.00050	REG BB SHELF ANGLES @ 4-1/2"	ASTM A36
12	1		HSS 5X5 DBL BEND TUBE SPL @ 27" LG & 26° ANGLE	A500 Gr. B / A572 Gr 50
13	8	0054.00566	6X6" TRANS. TUBE B/□ @ 6" LG	A500 Gr. B
15	1		6X6" BB @ 9'-0" KICKBACK, W/ CAP & 13° ANGLE	A500 Gr. B / A36
16	1		6X6" BB @ 17'-11 1/2", DRILL 3" CC.	A500 Gr. B
17	1		6X6" BB TOP TRANS @ 24'-9 3/4" LG W/EXP END	A500 Gr. B
18	1		6X6" BB BTM TRANS @ 25'-6 3/4" LG W/EXP END & 13° ANGLE	A500 Gr. B
19	18	0080.03355	3/8" X 7 1/2" BOLT, NUT, & 2 FW	A307, A563, F436
20	19	0080.04100	1/2" x 1-1/2" BOLT, NUT, & FW	A307, A563, F436
21	16	0080.04120	1/2" x 1-1/2" BOLT, NUT, 2 FW & LW	A307, A563, F436
23	14	0080.06340	3/4" X 7-1/2" BOLT, NUT, 2 FW	A325, A563, F436
24	8	0080.06370	3/4" X 8" CARR BOLT, NUT, FW & LW	A307, A563, F436
26	1		PARAPET WALL CONNECTION, LEFT-TRAILING	A572 Gr. 50, A615 Gr. 60, A709

BILL OF MATERIALS, WW 2

ITEM #	QTY.	COMPONENT #	DESCRIPTION	MATERIAL (ASTM)
1	3	0013.57021	3" I-POST, PUNCH 8" W/SPD @ 63" LG	ASTM A572 Gr. 50
2	3	0013.57025	3" I-POST, PUNCH 8", & 20" W/SPD @ 63" LG	ASTM A572 Gr. 50
3	2	0013.57060	3" I-END POST W/SPD @ 3'-8" LG	ASTM A572 Gr. 50
4	4	0013.09001	W6X9 POST @ 7' W/SPD & 5/8" HOLES	ASTM A572 Gr. 50
5	4	0013.57010	3" I-POST, PUNCH 8" & 20", W/8X32" SPADE @7'	ASTM A572 Gr. 50
7	1	0033.00640	HSS 5X5 TUBE SPLICE @27" LG W/ 1/4" SHIMS	A500 Gr. B / A572 Gr 50
10	19	0054.00050	REG BB SHELF ANGLES @ 4-1/2"	ASTM A36
12	1		HSS 5X5 DBL BEND TUBE SPL @ 27" LG & 34° ANGLE	A500 Gr. B / A572 Gr 50
13	8	0054.00566	6X6" TRANS. TUBE B/□ @ 6" LG	A500 Gr. B
15	1		6X6" BB @ 9'-0" KICKBACK, W/ CAP & TBD° ANGLE	A500 Gr. B / A36
16	1		6X6" BB @ 17'-11 1/2", DRILL 3" CC, W/ 44'-0" RADIUS	A500 Gr. B
17	1		6X6" BB TOP TRANS @ 24'-9 3/4" LG W/EXP END, & 44'-0" RAD.	A500 Gr. B
18	1		6X6" BB BTM TRANS @ 25'-6 3/4" LG W/EXP END & 44'-0" RAD.	A500 Gr. B
19	18	0080.03355	3/8" X 7 1/2" BOLT, NUT, & 2 FW	A307, A563, F436
20	19	0080.04100	1/2" x 1-1/2" BOLT, NUT, & FW	A307, A563, F436
21	16	0080.04120	1/2" x 1-1/2" BOLT, NUT, 2 FW & LW	A307, A563, F436
23	14	0080.06340	3/4" X 7-1/2" BOLT, NUT, 2 FW	A325, A563, F436
24	8	0080.06370	3/4" X 8" CARR BOLT, NUT, FW & LW	A307, A563, F436
26	1		PARAPET WALL CONNECTION, RIGHT-APPROACH	A572 Gr. 50, A615 Gr. 60, A709

BILL OF MATERIALS, WW 3

ITEM #	QTY.	COMPONENT #	DESCRIPTION	MATERIAL (ASTM)
1	4	0013.57021	3" I-POST, PUNCH 8" W/SPD @ 63" LG	ASTM A572 Gr. 50
2	3	0013.57025	3" I-POST, PUNCH 8", & 20" W/SPD @ 63" LG	ASTM A572 Gr. 50
3	3	0013.57060	3" I-END POST W/SPD @ 3'-8" LG	ASTM A572 Gr. 50
4	4	0013.09001	W6X9 POST @ 7' W/SPD & 5/8" HOLES	ASTM A572 Gr. 50
5	4	0013.57010	3" I-POST, PUNCH 8" & 20", W/8X32" SPADE @7'	ASTM A572 Gr. 50
7	1	0033.00640	HSS 5X5 TUBE SPLICE @27" LG W/ 1/4" SHIMS	A500 Gr. B / A572 Gr 50
10	21	0054.00050	REG BB SHELF ANGLES @ 4-1/2"	ASTM A36
12	1		HSS 5X5 DBL BEND TUBE SPL @ 27" LG & 52° ANGLE	A500 Gr. B / A572 Gr 50
13	8	0054.00566	6X6" TRANS. TUBE B/□ @ 6" LG	A500 Gr. B
15	1		6X6" BB @ 9'-0" KICKBACK, W/ CAP & 12 1/2° ANGLE	A500 Gr. B / A36
16	1		6X6" BB @ 17'-11 1/2", W/ PARTIAL 10' RADIUS	A500 Gr. B
17	1		6X6" BB TOP TRANS @ 24'-9 3/4" LG W/EXP END	A500 Gr. B
18	1		6X6" BB BTM TRANS @ 25'-6 3/4" LG W/EXP END	A500 Gr. B
19	20	0080.03355	3/8" X 7 1/2" BOLT, NUT, & 2 FW	A307, A563, F436
20	20	0080.04100	1/2" x 1-1/2" BOLT, NUT, & FW	A307, A563, F436
21	16	0080.04120	1/2" x 1-1/2" BOLT, NUT, 2 FW & LW	A307, A563, F436
23	14	0080.06340	3/4" X 7-1/2" BOLT, NUT, 2 FW	A325, A563, F436
24	8	0080.06370	3/4" X 8" CARR BOLT, NUT, FW & LW	A307, A563, F436
26	1		PARAPET WALL CONNECTION, RIGHT-APPROACH	A572 Gr. 50, A615 Gr. 60, A709

BILL OF MATERIALS, WW 4

ITEM #	QTY.	COMPONENT #	DESCRIPTION	MATERIAL (ASTM)
1	3	0013.57021	3" I-POST, PUNCH 8" W/SPD @ 63" LG	ASTM A572 Gr. 50
2	3	0013.57025	3" I-POST, PUNCH 8", & 20" W/SPD @ 63" LG	ASTM A572 Gr. 50
3	2	0013.57060	3" I-END POST W/SPD @ 3'-8" LG	ASTM A572 Gr. 50
4	4	0013.09001	W6X9 POST @ 7' W/SPD & 5/8" HOLES	ASTM A572 Gr. 50
5	4	0013.57010	3" I-POST, PUNCH 8" & 20", W/8X32" SPADE @7'	ASTM A572 Gr. 50
7	1	0033.00640	HSS 5X5 TUBE SPLICE @27" LG W/ 1/4" SHIMS	A500 Gr. B / A572 Gr 50
10	19	0054.00050	REG BB SHELF ANGLES @ 4-1/2"	ASTM A36
12	1		HSS 5X5 DBL BEND TUBE SPL @ 27" LG & 26°ANGLE	A500 Gr. B / A572 Gr 50
13	8	0054.00566	6X6" TRANS. TUBE B/□ @ 6" LG	A500 Gr. B
15	1		6X6" BB @ 9'-0" KICKBACK, W/ CAP & 13° ANGLE	A500 Gr. B / A36
16	1		6X6" BB @ 13'-1 3/16", DRILL 3" CC	A500 Gr. B
17	1		6X6" BB TOP TRANS @ 24'-9 3/4" LG W/EXP END	A500 Gr. B
18	1		6X6" BB BTM TRANS @ 25'-6 3/4" LG W/EXP END	A500 Gr. B
19	18	0080.03355	3/8" X 7 1/2" BOLT, NUT, & 2 FW	A307, A563, F436
20	19	0080.04100	1/2" x 1-1/2" BOLT, NUT, & FW	A307, A563, F436
21	16	0080.04120	1/2" x 1-1/2" BOLT, NUT, 2 FW & LW	A307, A563, F436
23	14	0080.06340	3/4" X 7-1/2" BOLT, NUT, 2 FW	A325, A563, F436
24	8	0080.06370	3/4" X 8" CARR BOLT, NUT, FW & LW	A307, A563, F436
26	1		PARAPET WALL CONNECTIONS, LEFT-TRAILING	A572 Gr. 50, A615 Gr. 60, A709

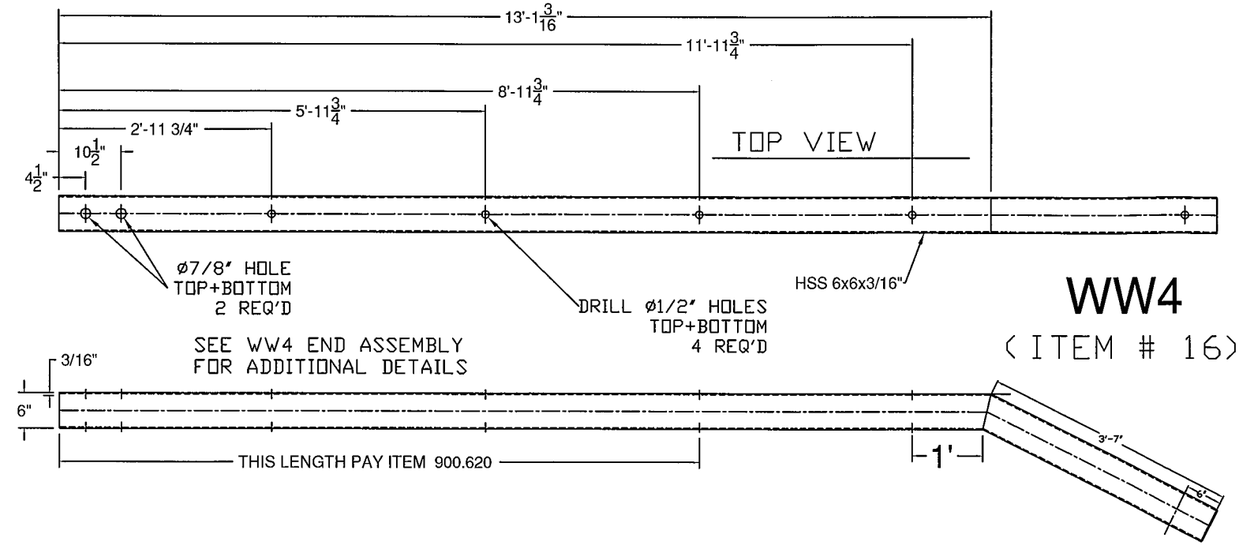

WW4
(ITEM # 16)

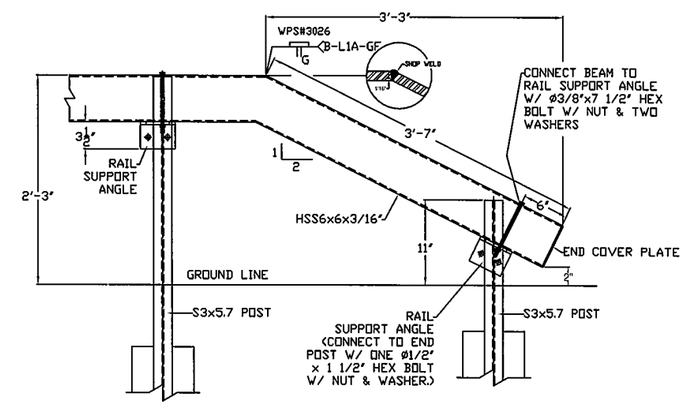

WW 4 END ASSEMBLY DETAIL

HARDWARE NOTES

ITEM #	FUNCTION
19	BOLT RAIL TO SHELF ANGLE (ITEM #10)
20	BOLT SHELF ANGLE (ITEM # 10) TO POST
21	BOLT BLOCK-OUTS (ITEM # 13) TO HEAVY POST (ITEM # 4)
23	SPLICE TUBING (ITEM #'S 7 & 12), & (4) PER PARAPET WALL CONNECTION (ITEM # 26)
24	BOLT RAIL (ITEMS #'S 17, & 18 TO BLOCK-OUTS (ITEM # 13)

ITEM #: 900.620

SHEET 7 OF 7

APPROVED BY:

Galvanized 2-Rail Box Beam Guardrail Approach Section

ROCHESTER, BRF 0162 (16) VT RTE 73 (MAJOR COLLECTOR), BRIDGE NO. 15, OVER BRANDON BROOK
TOWN OF ROCHESTER, COUNTY OF WINDSOR, VT

REV	NO.	DATE	DESCRIPTION	BY	REV	NO.	DATE	DESCRIPTION	BY
	1	6/10/14	REVISED PER 5/29/14 MARK-UP	E.P.					

ELDERLEE, INC.
OAKS CORNERS, NEW YORK 14518
E-Mail: dlong@elderlee.com / epeek@elderlee.com
Tel: 315-789-6620 Fax: 315-789-6615

AISC CERTIFIED FABRICATOR

DRAWN	E.P.	5/13/14
CHECKED	D.L.	3/10/14
APPROVED	M.V.	.
SCALE	SCHEMATIC	
DRAWING NO.	FR L - ROCHESTER TR15	

WELDING PROCEDURE SPECIFICATION

PQR ELDERLEE#3

Material Specification	A500 GR B
Welding Process	FCAW
Manual or Machine	SEMAUTOMATIC
Position of Welding	FLAT / HORIZONTAL
Filler Metal Specification	A5.20 - 95
Filler Metal Classification	E81T-Ni1C-JH4
Flux	N/A
Shielding Gas	CO 2 Dew Point -40DEG F Flow Rate 50CFH
Single or Multiple Pass	SINGLE
Single or Multiple Arc	SINGLE
Welding Current	DC
Polarity	REVERSE ELECTRODE POSITIVE
Welding Progression	STRINGER
Root Treatment	PER D1.5
Preheat and Interpass Temperature	PER D1.5
Postheat Temperature	NONE
Heat Input	Min _____ Max _____

WELDING PROCEDURE

Pass no.	Electrode size	Welding Current Amperes	Welding Current Volts	Travel speed	Joint detail
	1/16	310	25	11	
Variable	LIMITS	341 TO 269	27 TO 23	12 TO 10	

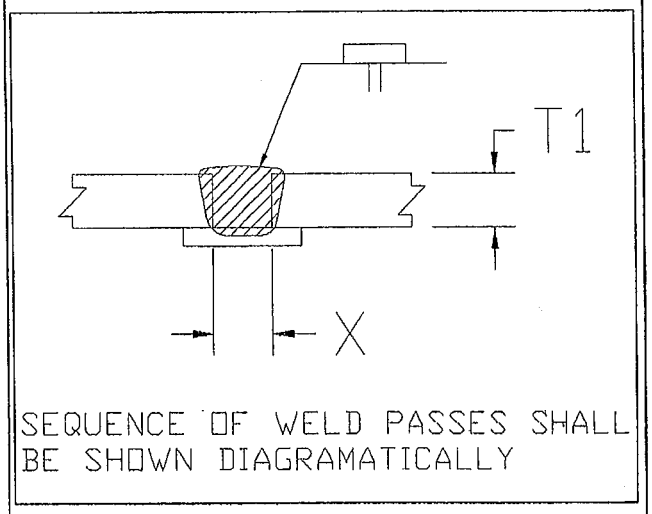

This procedure may vary due to fabrication sequence, fit-up, pass size, etc., within the limitation of variables given in Section 5.

Procedure No. 3003

Revision No. _____

Contractor Elderlee, Inc.

Authorized By RANDY SCOTT

Date 5/8/2014

Form III-2

WELDING PROCEDURE SPECIFICATION

PQR ELDERLEE #3

Material Specification	A709 TO A500 GR B
Welding Process	FCAW-G
Manual or Machine	SEMAUTOMATIC
Position of Welding	FLAT/HORIZONTAL
Filler Metal Specification	A5.29
Filler Metal Classification	E81T1-Ni1C-JH4
Flux	N/A
Shielding Gas	CO 2 Dew Point -40DEG F Flow Rate 50CFH
Single or Multiple Pass	SINGLE
Single or Multiple Arc	SINGLE
Welding Current	DC
Polarity	REVERSE ELECTRODE POSITIVE
Welding Progression	STRINGER
Root Treatment	D1.5
Preheat and Interpass Temperature	D1.5
Postheat Temperature	NONE
Heat Input	Min _____ Max _____

WELDING PROCEDURE

Pass no.	Electrode size	Welding Current Amperes	Welding Current Volts	Travel speed	Joint detail
1	1/16	310	25	11	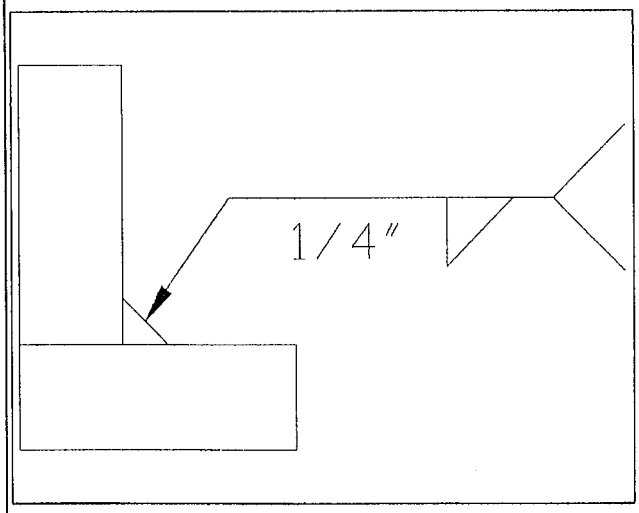
Variable	LIMITS	341 TO 269	27 TO 23	12 TO 10	

This procedure may vary due to fabrication sequence, fit-up, pass size, etc., within the limitation of variables given in Section 5.

Procedure No.	3009	Contractor	Elderlee, Inc.
Revision No.		Authorized By	RANDY SCOTT
		Date	3/20/2014

WELDING PROCEDURE SPECIFICATION

PQR ELDERLEE #3

Material Specification	ASTM-A36 A709 GR 36 CVN
Welding Process	FCAW-G
Manual or Machine	SEMAUTOMATIC
Position of Welding	FLAT/HORIZONTAL
Filler Metal Specification	A5.29
Filler Metal Classification	E81T1-Ni1C-JH4
Flux	N/A
Shielding Gas	CO 2 Dew Point -40DEG F Flow Rate 50CFH
Single or Multiple Pass	SINGLE
Single or Multiple Arc	SINGLE
Welding Current	DC
Polarity	REVERSE
Welding Progression	STRINGER
Root Treatment	PER D1.5
Preheat and Interpass Temperature	PER D1.5
Postheat Temperature	NONE
Heat Input	Min _____ Max _____

WELDING PROCEDURE

Pass no.	Electrode size	Welding Current Amperes	Welding Current Volts	Travel speed	Joint detail
1	1/16	310	25	11	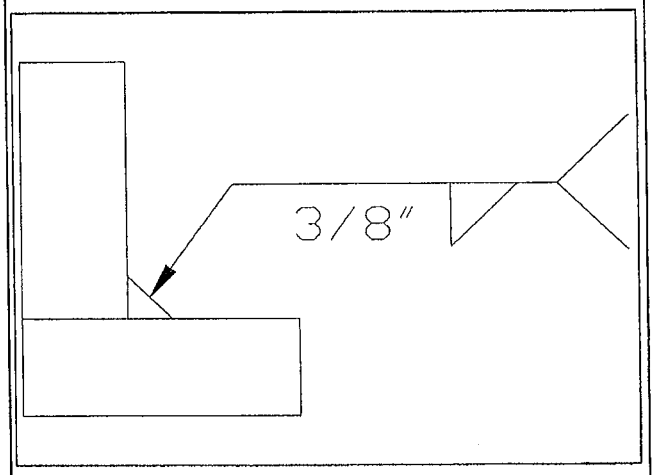
Variable	LIMITS	341 TO 269	27 TO 23	12 TO 10	

This procedure may vary due to fabrication sequence, fit-up, pass size, etc., within the limitation of variables given in Section 5.

Procedure No.	3016	Contractor	Elderlee, Inc.
Revision No.		Authorized By	RANDY SCOTT
		Date	3/24/2014

WELDING PROCEDURE SPECIFICATION

PQR ELDERLEE #3

Material Specification	ASTM A572 GR. 50
Welding Process	FCAW-G
Manual or Machine	SEMAUTOMATIC
Position of Welding	FLAT/HORIZONTAL
Filler Metal Specification	A5.29
Filler Metal Classification	E81T1-Ni1C-JH4
Flux	N/A
Shielding Gas	CO 2 Dew Point -40DEG F Flow Rate 50CFH
Single or Multiple Pass	SINGLE
Single or Multiple Arc	SINGLE
Welding Current	DC
Polarity	REVERSE ELECTRODE POSITIVE
Welding Progression	STRINGER
Root Treatment	CLEAN PER D1.5
Preheat and Interpass Temperature	PER D1.5
Postheat Temperature	NONE
Heat Input	Min _____ Max _____

WELDING PROCEDURE

Pass no.	Electrode size	Welding Current Amperes	Welding Current Volts	Travel speed	Joint detail
1	1/16	310	25	11	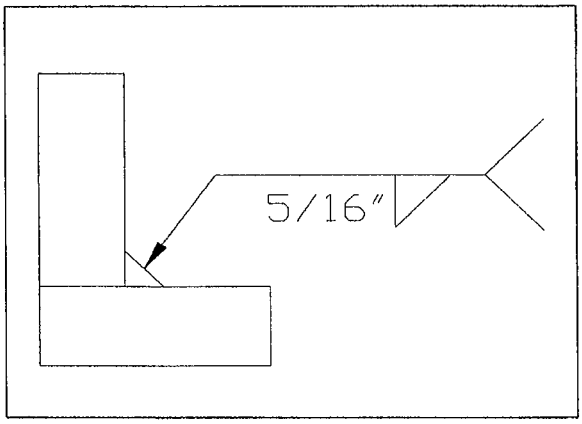
Variable	LIMITS	341 TO 269	27 TO 23	12 TO 10	

This procedure may vary due to fabrication sequence, fit-up, pass size, etc., within the limitation of variables given in Section 5.

Procedure No.	3019	Contractor	Elderlee, Inc.
Revision No.		Authorized By	RANDY SCOTT
		Date	3/20/2014

WELDING PROCEDURE SPECIFICATION

Material Specification	ASTM A36-08
Welding Process	GMAW
Manual or Machine	SEMIAUTOMATIC/ROBOTIC
Position of Welding	FLAT/HORIZONTAL
Filler Metal Specification	A5.18
Filler Metal Classification	L-56 LINCOLN
Flux	N/A
Shielding Gas	90% ARGON /10% CO2 Dew Point -40DEG F Flow Rate 45CFH
Single or Multiple Pass	SINGLE
Single or Multiple Arc	SINGLE
Welding Current	DC
Polarity	REVERSE
Welding Progression	STRINGER
Root Treatment	PER D1.5
Preheat and Interpass Temperature	PER D1.5
Postheat Temperature	NONE
Heat Input	Min _____ Max _____

WELDING PROCEDURE

Pass no.	Electrode size	Welding Current Amperes	Welding Current Volts	Travel speed	Joint detail
	.045	190	22	19	
Variable	LIMITS	171 TO 209	20 TO 24	17 TO 21	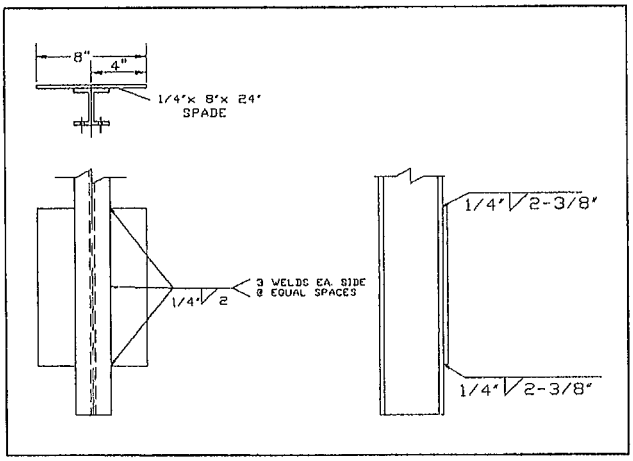

This procedure may vary due to fabrication sequence, fit-up, pass size, etc., within the limitation of variables given in Section 5.

Procedure No. 3022

Revision No. _____

Contractor Elderlee, Inc.

Authorized By RANDY SCOTT

Date 3/20/2014

WELDING PROCEDURE SPECIFICATION

PQR ELDERLEE #3

Material Specification	A500 TO A36
Welding Process	FCAW-G
Manual or Machine	SEMAUTOMATIC
Position of Welding	FLAT/HORIZONTAL
Filler Metal Specification	A5.29
Filler Metal Classification	E81T1-Ni1C-JH4
Flux	N/A
Shielding Gas	CO 2 Dew Point -40DEG F Flow Rate 50CFH
Single or Multiple Pass	SINGLE
Single or Multiple Arc	SINGLE
Welding Current	DC
Polarity	REVERSE
Welding Progression	STRINGER
Root Treatment	CLEAN PER D1.5
Preheat and Interpass Temperature	PER D1.5
Postheat Temperature	NONE
Heat Input	Min _____ Max _____

WELDING PROCEDURE

Pass no.	Electrode size	Welding Current		Travel speed	Joint detail
		Amperes	Volts		
	1/16	310	25	11	
Variable	LIMITS	341 TO 269	27 TO 23	12 TO 10	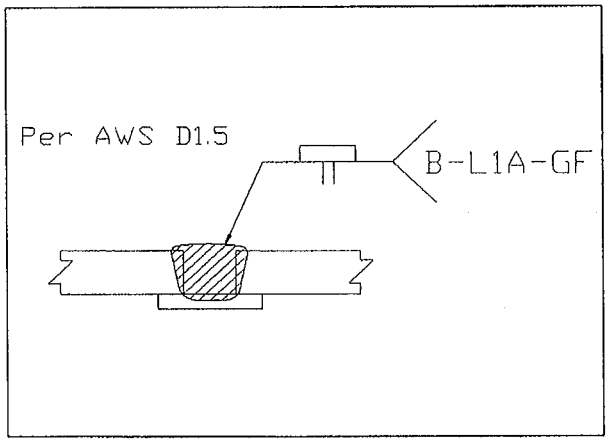

This procedure may vary due to fabrication sequence, fit-up, pass size, etc., within the limitation of variables given in Section 5.

Procedure No. 3026

Revision No. _____

Contractor Elderlee, Inc.

Authorized By RANDY SCOTT

Date 3/24/2014