H.B. FLEMING, INC.

CONTRACTING · ENGINEERING

89 Pleasant Ave. South Portland, ME 04106

Phone 207-799-8514 Fax 207-799-8538

www.hbfleming.com

PILE DRIVING BRIDGES SUBMARINE PIPELINES

SUBMITTAL

Submitted To:
Client: W.M. Schultz Construction
Attention: Kevin Ture

Date: 5/23/14
Project: Rt. 73 bridge 15
Location: Rochester, VT

Subject: Pile Driving Criteria

H.B. Fleming Proposes to use the following driving criteria for the piles to be installed at the above location.

Hammer

- An MKT DE-42 single acting open ended diesel pile hammer will be used to drive the piles. The DE-42 has a ram weight of 4,200 Lbs, a max stroke of 10', and a rated energy of 42,000 ft-lbs
- The DE-42 uses a Monocast MC 901 pile cushions.

Pile

- HP 14x89 ASTM A572 Gr. 50 pile
- The Ultimate capacity is 150 tons.
- Piles will be fitted with cast steel points

Results

- Piles will be driven until a blow count of 4 blows per inch for three consecutive inches is obtained.
- These criteria are based upon the output generated from the WEAP analysis that follows.

Signed: _____

John Linscott IV "Scotty"

H.B. FLEMING PILE EQUIPMENT DATA SHEET

Project: Rt. 73 Bridge 15
Location: Rochester, VT

Date: 5/23/2014
Client: W.M. Schultz

HAMMER

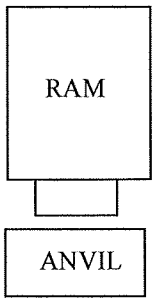

Manufacturer:	MKT
Model:	DE-42
Type:	Single Acting Diesel
Length of Stroke:	10' - 6"
Rated Energy at Given Stroke:	42,000 ft-lb
Modifications:	None

HAMMER CUSHION

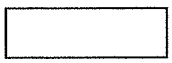

Material:	Monocast MC901
Thickness:	2"
Area:	283.5 in^2
Modulus of Elasticity:	285 ksi
Coefficient of Restitution:	0.8

DRIVE HEAD

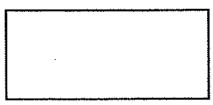

Weight:	1200 lb

PILE CUSHION

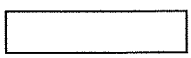

Cushion Material:	N/A
Thickness:	N/A
Modulus of Elasticity:	N/A
Coefficient of Restitution:	N/A

PILE

Pile Type:	HP 14x89
Length in Leads:	Up to 65'
Weight/LF:	89 lb
Wall Thickness:	.615"
Taper:	N/A
Cross Sectional Area:	26.1 in^2
Ultimate Capacity	150 tons
Splice Description:	Full Penetration Butt Weld
Tip Treatment Description:	Cast Steel Point

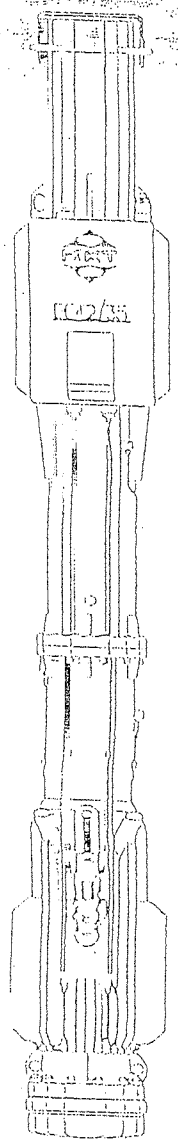

INTRODUCING THE NEW

DE42/35

MAXIMUM DIESEL HAMMER FLEXIBILITY FITTING IN 8 x 20 LEADS WITH RAM WEIGHTS TO 4,200 LBS.

ONE HAMMER... MULTIPLE RAM SIZES... AND ENERGY RANGES. ANOTHER MKT FIRST PROVIDING THE CONTRACTOR WITH HAMMER SIZE FLEXIBILITY AND REDUCED EQUIPMENT INVESTMENT COSTS. MKT DIESEL HAMMERS CONTINUE TO OFFER FEATURES WHICH INSURE DEPENDABLE AND PRODUCTIVE OPERATION. USING EITHER STANDARD OR REMOTE FUEL DELIVERY SYSTEMS.

SPECIFICATIONS DE-42/35		
RAM-PISTON WEIGHT (LBS.)	3,500	4,200
ENERGY RATING (FT.LBS.)	35,000	42,000
BEARING BASED ON ENGINEERING NEWS FORMULA (TONS)	230	230
MAXIMUM OBTAINABLE STROKE	10'-6"	10'-6"
OVERALL LENGTH WITH DRIVE CAP	16'-7"	16'-7"
WEIGHT, HAMMER ONLY (LBS.)	8,600	9,300
WEIGHT, HAMMER AND UNIVERSAL DRIVE CAP (LBS.)	9,550	10,250

PUBLISHED ENERGY RATINGS ARE EQUAL TO RAM WEIGHT X 10.0 FT. RAM STROKE. ACTUAL ENERGIES DELIVERED ARE A FUCTION OF THE OVERALL JOB CONDITIONS. BEARING RATINGS ARE BASED UPON ENGINEERING NEWS FORMULA, PILE SET EQUAL TO 0.1 IN./BLOW.

PRODUCT LIST

- SINGLE ACTING DIESEL PILE HAMMERS
- AIR PILE HAMMERS
- VIBRATORY PILE DRIVERS/EXTRACTORS
- VIBRATORY HAMMER ACCESSORIES
- PILE DRIVING LEAD SYSTEMS
- CUSTOM ENGINEERED PRODUCTS
- DOUBLE ACTING DIESEL PILE HAMMERS
- DRIVE CAPS AND ACCESSORIES
- HYDRAULIC POWER UNITS
- HYDRAULIC AUGER SYSTEMS
- BOTTOM BRACES
- LEAD ACCESSORIES

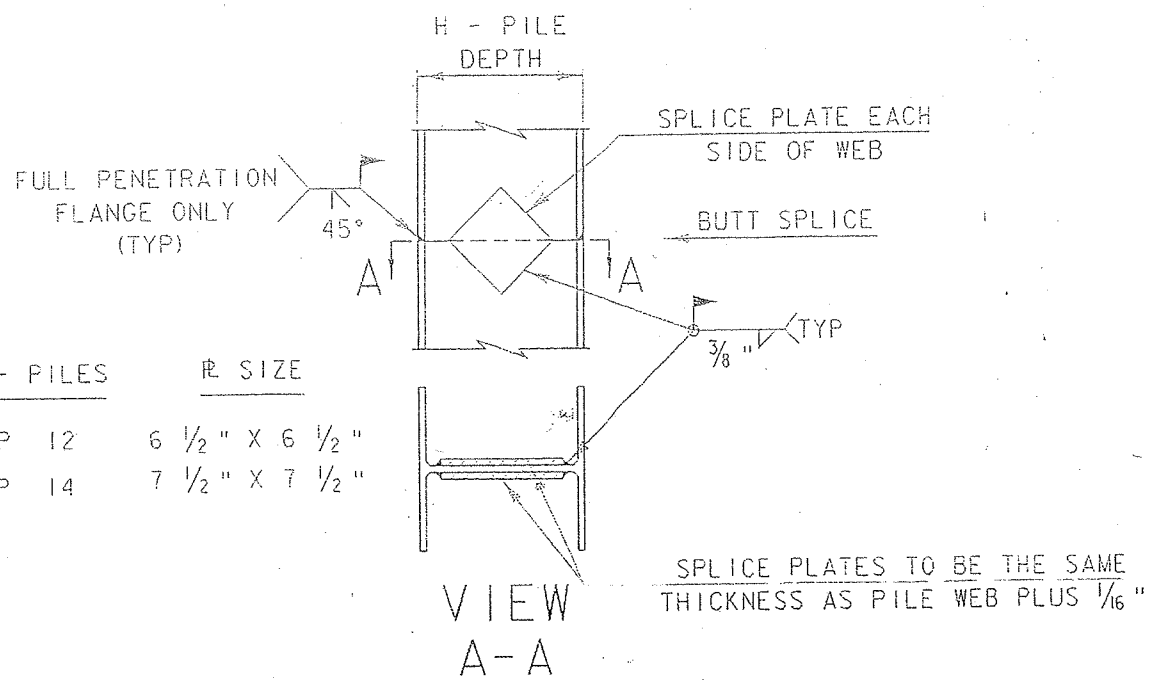

DETAIL OF PILE SPLICE

NOT TO SCALE

HARD-BITE™ – HP-77600-B

Dimensions

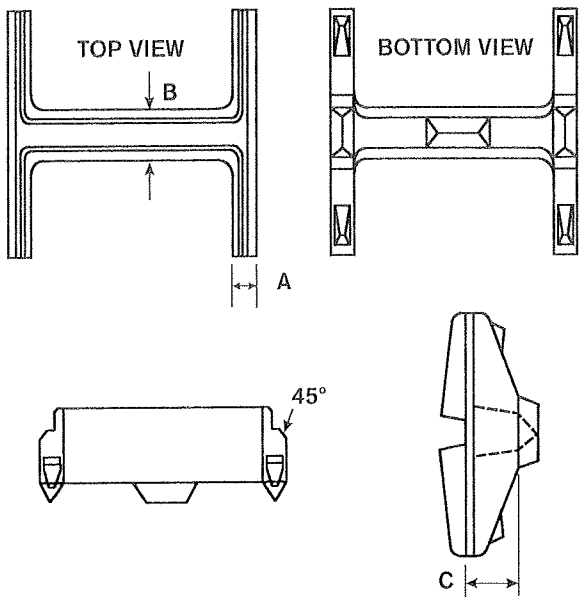

MATERIAL: CAST STEEL

ASTM A148 90/60

	8"	10"	14"
A	1-1/16"	1"	1"
B	1"	1"	1-1/4"
C	1-7/8"	2-1/16"	2-3/4"
Wt.	12#	23#	31#

Installation Instructions

1. Fit point onto the end of the square cut pile end.
2. Weld point to the pile in either flat or vertical position using E7018 electrodes.
3. Weld across full width of flange following chart below for minimum size weld.

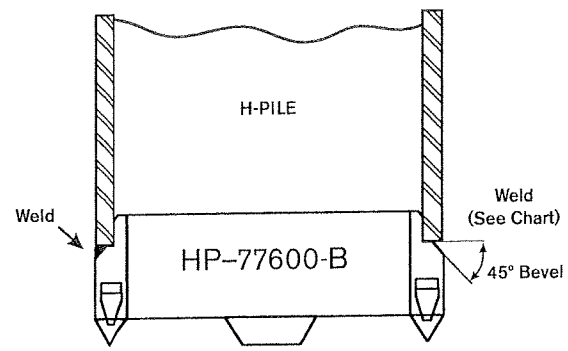

Pile Size	Flange Thickness	Groove Weld
HP 14 x 117	.805	7/16
x 102	.705	3/8
x 89	.615	3/8
x 73	.505	5/16
HP 10 x 57	.565	5/16
x 42	.420	5/16
HP 8 x 36	.445	5/16

ASSOCIATED PILE & FITTING

PO Box 5933 Parsippany, NJ 07054-5933
Tel: 973-773-8400
Fax: 973-428-5146
email: apf@associatedpile.com
www.associatedpile.com
Call Toll Free: 800-526-9047

(12/11)

MKT. DE-1/2 VARIABLE CAPACITY

H.B. Fleming
Enter Project Title Here

02-May-2014
GRLWEAP (TM) Version 2005

Ultimate Capacity kips	Maximum Compression Stress ksi	Maximum Tension Stress ksi	Blow Count blows/in	Stroke ft	Energy kips-ft
260.0	32.34	0.03	2.6	10.00	21.25
270.0	32.34	0.07	2.7	10.00	21.10
280.0	32.34	0.07	2.8	10.00	20.95
290.0	32.51	0.13	2.9	10.00	20.81
300.0	32.96	0.22	3.1	10.00	20.67
310.0	33.41	0.30	3.2	10.00	20.53
320.0	33.91	0.37	3.3	10.00	20.40
330.0	34.33	0.41	3.5	10.00	20.26
340.0	34.71	0.41	3.6	10.00	20.13
350.0	35.19	0.42	3.8	10.00	20.00

MKT DE-42 VARIABLE CAPACITY

H.B. Fleming
Enter Project Title Here

02-May-2014
GRLWEAP (TM) Version 2005

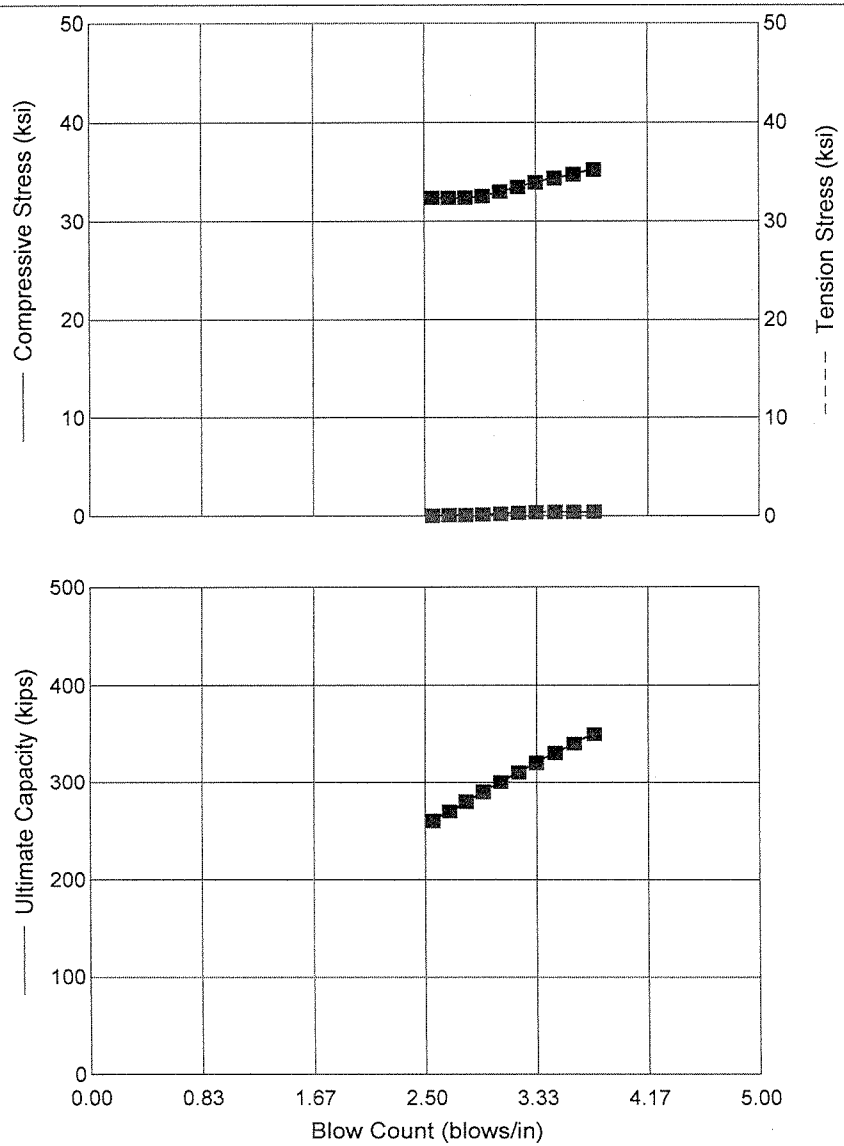

MKT DE 42/35

Stroke	10.00	ft
Efficiency	0.800	
Helmet	1.20	kips
Hammer Cushion	17719	kips/in
Skin Quake	0.100	in
Toe Quake	0.040	in
Skin Damping	0.050	sec/ft
Toe Damping	0.150	sec/ft
Pile Length	30.00	ft
Pile Penetration	30.00	ft
Pile Top Area	26.10	in2

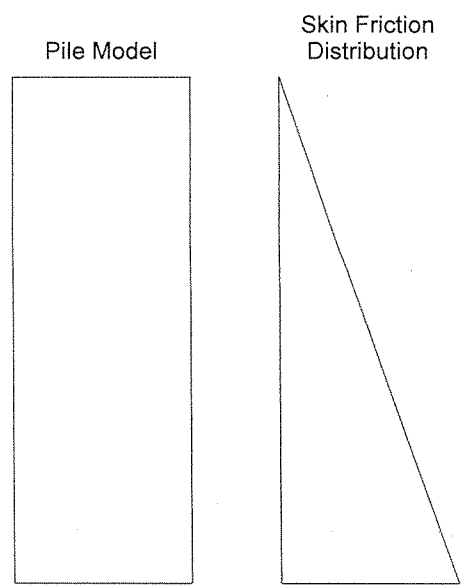

Res. Shaft = 22 %
(Proportional)

MKT DE 42 CONSTANT CAPACITY

H.B. Fleming
Enter Project Title Here

02-May-2014
GRLWEAP (TM) Version 2005

Ultimate Capacity kips	Maximum Compression Stress ksi	Maximum Tension Stress ksi	Blow Count blows/in	Stroke ft	Energy kips-ft
300.0	15.33	0.26	22.2	3.38	3.72
300.0	19.70	0.19	9.7	4.50	6.40
300.0	23.14	0.17	6.6	5.62	9.21
300.0	26.18	0.22	5.0	6.75	12.11
300.0	28.78	0.27	4.1	7.88	15.01
300.0	31.01	0.25	3.5	9.00	17.99
300.0	33.04	0.21	3.0	10.12	20.98
300.0	35.20	0.18	2.7	11.25	23.99
300.0	36.97	0.17	2.4	12.38	26.94
300.0	38.78	0.17	2.2	13.50	29.96

MKT DE-42 CONSTANT CAPACITY

H.B. Fleming
Enter Project Title Here

02-May-2014
GRLWEAP (TM) Version 2005

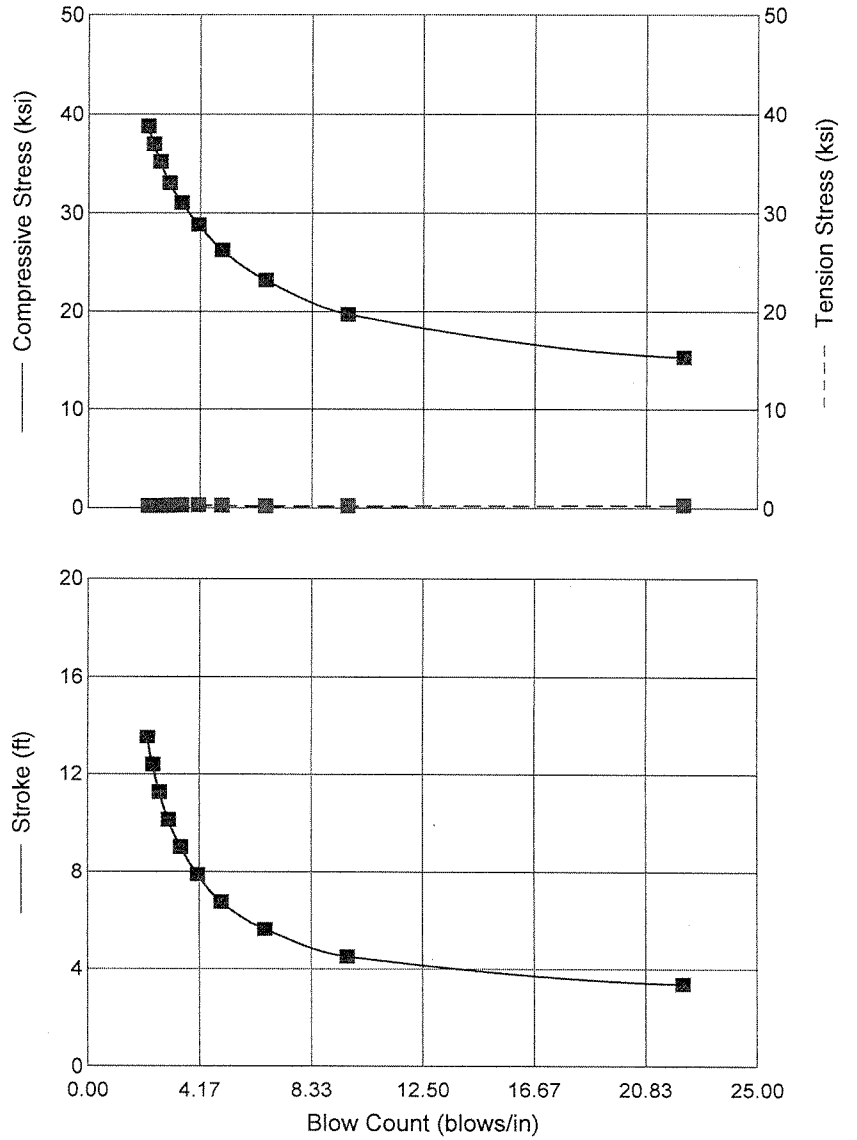

MKT DE 42/35

Capacity	300.0	kips
Efficiency	0.800	
Helmet	1.20	kips
Hammer Cushion	17719	kips/in
Skin Quake	0.100	in
Toe Quake	0.040	in
Skin Damping	0.050	sec/ft
Toe Damping	0.150	sec/ft
Pile Length	30.00	ft
Pile Penetration	30.00	ft
Pile Top Area	26.10	in2

Pile Model

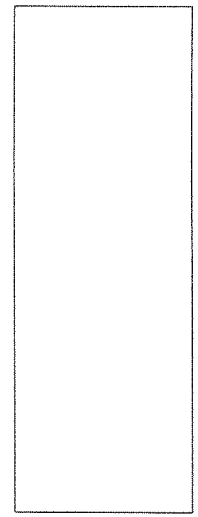

Skin Friction Distribution

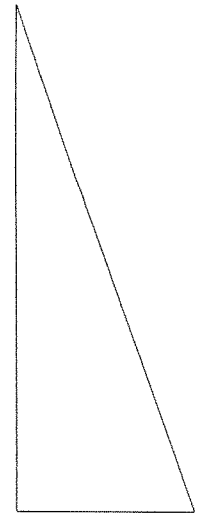

Res. Shaft = 22 %
(Proportional)

JOINT WELDING
PROCEDURE SPECIFICATION

Material specification: PILE = ASTM A572 GR.50 / EQUIVALENT ; POINT = ASTM A27 65/35
Welding process: SMAW
Manual or machine: MANUAL
Position of welding: HORIZONTAL OR VERTICAL
Filler metal specification: AWS A5.1
Filler metal classification: E7018
Flux: N/A
Shielding gas: N/A Flow rate: N/A
Single or multiple pass: MULTIPLE (IF REQUIRED)
Single or multiple arc: SINGLE
Welding current: DC
Polarity: REVERSE
Welding progression: N/A
Root treatment: NONE - POINTS ARE PRE-BEVELED TO PROFILE
Preheat and interpass temperature: PER AWS D1.1
Postheat treatment: NONE

WELDING PROCEDURE

Pass no.	Electrode size	Welding current		Travel speed	Joint detail
		Amperes	Volts		
1	1/8"	120-150	12-24	1 FT/MIN	
2+	5/32"	140-180	12-24	1 FT/MIN	

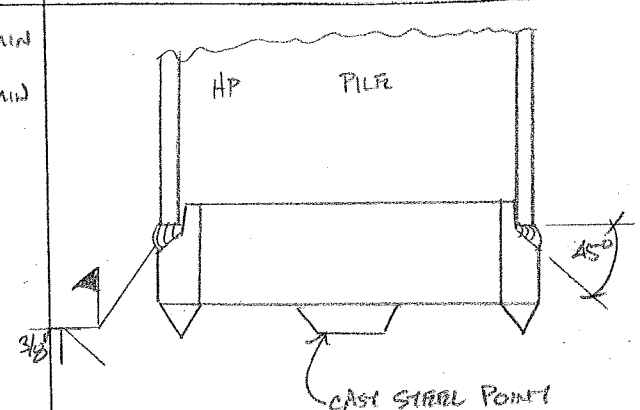

This procedure may vary due to fabrication sequence, fit-up, pass size, etc., within the limitation of variables given in Section 5.

Procedure no. H PILE POINT ATTACHMENT Contractor A.B. FLEMING, INC.
Revision no. Ø Authorized by
Form E-2 Date

Form E-2 — Welding Procedure Specification

JOINT WELDING
PROCEDURE SPECIFICATION

Material specification: ASTM A572 GR. 50 / EQUIVALENT
Welding process: SMAW
Manual or machine: MANUAL
Position of welding: HORIZONTAL
Filler metal specification: AWS A5.1
Filler metal classification: E7018
Flux: N/A
Shielding gas: N/A Flow rate: N/A
Single or multiple pass: MULTIPLE IF REQUIRED
Single or multiple arc: SINGLE
Welding current: D/C
Polarity: REVERSE
Welding progression: N/A
Root treatment: GRIND / BEVEL TO PROFILE
Preheat and interpass temperature: PER AWS D1.1
Postheat treatment: NONE

WELDING PROCEDURE

Pass no.	Electrode size	Welding current		Travel speed	Joint detail
		Amperes	Volts		
1	1/8"	120-150	12-24	1 FT/MIN	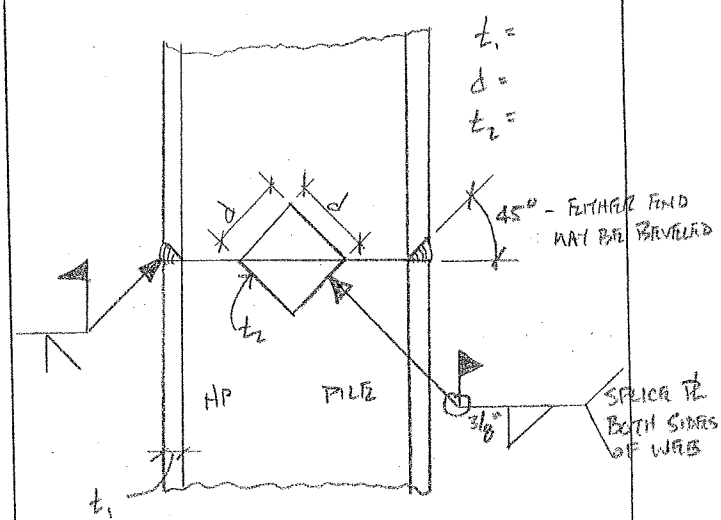
2+	5/32"	140-180	12-24	1 FT/MIN	

This procedure may vary due to fabrication sequence, fit-up, pass size, etc., within the limitation of variables given in Section 5.

Procedure no. VAOT WEB DIAMOND SPLICE
Revision no. ∅
Form E-2

Contractor H.B. FLEMING, INC
Authorized by [signature] III "SCOTT"
Date 5/23/14

Form E-2 — Welding Procedure Specification