STATE OF VERMONT
AGENCY OF TRANSPORTATION

PRELIMINARY INFORMATION SHEET (BRIDGE)

Version 12.01.01c

LRFD

INDEX OF SHEETS

PLAN SHEETS

REVISION NEW SHEET: JUNE 19, 2014
90A BR 15 SPOT ELEVATIONS

REVISION SHEETS: JUNE 19, 2014
60 BR 15 PRELIMINARY INFORMATION SHEET
63 BR 15 TYPICAL EARTHWORK SECTIONS
86 BR 15 NEXT BEAM DETAILS (2 OF 4)
88 BR 15 NEXT BEAM DETAILS (4 OF 4)
90 BR 15 CURTAIN WALL DETAILS (2 OF 2)
92 BR 15 PRECAST APPROACH SLAB (1 OF 2)
93 BR 15 PRECAST APPROACH SLAB (2 OF 2)
94 BR 15 ABUTMENT NO 1 PLAN & ELEVATION
95 BR 15 ABUTMENT NO 2 PLAN & ELEVATION
98 BR 15 WINGWALL DETAILS (1 OF 2)

STANDARDS LIST

Vanasse Hangen Brustlin, Inc.

TRAFFIC DATA

YEAR	ADT	DHV	% D	% T	ADTT
2014	770	160	65	8.7	65
2034	810	160	65	12.6	100

20 year ESAL for flexible pavement from 2014 to 2034 : 398000
40 year ESAL for flexible pavement from 2014 to 2054 : 950000
Design Speed : 15 mph

AS BUILT "REBAR" DETAILS

LEVEL I	LEVEL II	LEVEL III
TYPE:	TYPE:	TYPE:
GRADE:	GRADE:	GRADE:

FINAL HYDRAULIC REPORT

HYDROLOGIC DATA

Date: Nov. 2012

DRAINAGE AREA : 15.8 sq. mi.
CHARACTER OF TERRAIN : Hilly to mountainous, mostly forested
STREAM CHARACTERISTICS : Straight, alluvial, steep upstream with flatter valley downstream
NATURE OF STREAMBED : Mostly cobbles and boulders with some gravel

PEAK FLOW DATA

Q 2.33 =	900 cfs	Q 50 =	3000 cfs
Q 10 =	1900 cfs	Q 100 =	3600 cfs
Q 25 =	2500 cfs	Q 500 =	5000 cfs

DATE OF FLOOD OF RECORD : Unknown
ESTIMATED DISCHARGE: Unknown
WATER SURFACE ELEV.: Unknown
NATURAL STREAM VELOCITY : @ Q50 = 11.0 fps
ICE CONDITIONS : Heavy
DEBRIS: Moderate
DOES THE STREAM REACH MAXIMUM HIGHWATER ELEV. RAPIDLY? Yes
IS ORDINARY RISE RAPID? Yes
IS STAGE AFFECTED BY UPSTREAM OR DOWNSTREAM CONDITIONS? No
IF YES, DESCRIBE:

WATERSHED STORAGE: < 1%
HEADWATERS:
UNIFORM: X
IMMEDIATELY ABOVE SITE:

EXISTING STRUCTURE INFORMATION

STRUCTURE TYPE: Single span concrete T-beam bridge
YEAR BUILT: 1929
CLEAR SPAN(NORMAL TO STREAM): 39'
VERTICAL CLEARANCE ABOVE STREAMBED: 9'
WATERWAY OF FULL OPENING: 300 sq. ft.
DISPOSITION OF STRUCTURE: Remove
TYPE OF MATERIAL UNDER SUBSTRUCTURE: See boring logs

WATER SURFACE ELEVATIONS AT:

Q2.33 =	997.0'	VELOCITY =	9.2 fps
Q10 =	999.3'	"	11.6 fps
Q25 =	1000.3'	"	12.7 fps
Q50 =	1001.1'	"	13.5 fps
Q100 =	1003.1'	"	16.7 fps

LONG TERM STREAMBED CHANGES: The stream bed appears to have lowered 2' - 3' in front of the abutments since 1929, but the low point of the channel has not changed much.

IS THE ROADWAY OVERTOPPED BELOW Q100: No
FREQUENCY: Above Q100
RELIEF ELEVATION: 1002.6'
DISCHARGE OVER ROAD @Q100: None

UPSTREAM STRUCTURE

TOWN: Rochester
DISTANCE: 7,500'
HIGHWAY # : VT 73
STRUCTURE #: 14
CLEAR SPAN: 35'
CLEAR HEIGHT: 7.5'
YEAR BUILT: 1927
FULL WATERWAY: N.A.
STRUCTURE TYPE: Concrete T-beam bridge

DOWNSTREAM STRUCTURE

TOWN: Rochester
DISTANCE: 450'
HIGHWAY # : N/A -Concfluence with West Branch
STRUCTURE #:
CLEAR SPAN:
CLEAR HEIGHT:
YEAR BUILT:
FULL WATERWAY:
STRUCTURE TYPE:

LRFR LOAD RATING FACTORS

LOADING LEVELS	TRUCK						
	H-20	HL-93	3S2	6 AXLE	3A. STR.	4A. STR.	5A. SEMI
TONNAGE	20	36	36	66	30	34.5	38
INVENTORY	1.92	1.00					
POSTING							
OPERATING	2.6	1.36	2.33	1.49	1.92	1.72	1.93
COMMENTS:							

*SEE PROJECT NOTES.

PILE DRIVING AND TESTING REQUIREMENTS

1. NOMINAL PILE DRIVING CAPACITY — Rnd: *
2. PILE TEST RESISTANCE FACTOR — ϕ: 0.65
3. MAXIMUM PILE TIP ELEVATION — *
4. A MINIMUM OF 3 DYNAMIC TESTS SHALL BE PERFORMED DURING INSTALLATION. NO LESS THAN 1 TEST SHOULD BE PERFORMED AT EACH ABUTMENT. THE REMAINING PILES SHOULD BE CALIBRATED BY WAVE EQUATION ANALYSIS.

PROPOSED STRUCTURE

STRUCTURE TYPE: Single span prestressed concrete NEXT Beam bridge

CLEAR SPAN(NORMAL TO STREAM): 60'
VERTICAL CLEARANCE ABOVE STREAMBED: 8'
WATERWAY OF FULL OPENING: 420 sq. ft.

WATER SURFACE ELEVATIONS AT:

Q2.33 =	996.3'	VELOCITY=	8.0 fps
Q10 =	997.9'	"	9.7 fps
Q25 =	998.7'	"	10.4 fps
Q50 =	999.3'	"	11.1 fps
Q100 =	1001.8'	"	12.9 fps

IS THE ROADWAY OVERTOPPED BELOW Q100: No
FREQUENCY: Above Q100
RELIEF ELEVATION: 1002.6'
DISCHARGE OVER ROAD @Q100: None

AVERAGE LOW ELEVATION OF SUPERSTRUCTURE: 1001.2'
VERTICAL CLEARANCE: @ Q50 = 1.9'

SCOUR: Total long term degradation and contraction scour up to Q100 = 2' and up to Q500 = 3'.
REQUIRED CHANNEL PROTECTION: Stone Fill, Type IV

PERMIT INFORMATION

AVERAGE DAILY FLOW:	30 cfs	DEPTH OR ELEVATION:
ORDINARY LOW WATER:	15 cfs	Depth = 1'
ORDINARY HIGH WATER:	400 cfs	Depth = 3'

TEMPORARY BRIDGE REQUIREMENTS

STRUCTURE TYPE: No temporary bridge required.
CLEAR SPAN (NORMAL TO STREAM):
VERTICAL CLEARANCE ABOVE STREAMBED:
WATERWAY AREA OF FULL OPENING:

ADDITIONAL INFORMATION

TRAFFIC MAINTENANCE NOTES

1. MAINTAIN TRAFFIC ON AN OFF SITE DETOUR.
2. TRAFFIC SIGNALS ARE NOT NECESSARY.
3. SIDEWALKS ARE NOT NECESSARY

DESIGN VALUES

1. DESIGN LIVE LOAD		HL-93
2. FUTURE PAVEMENT	d_p:	0 INCH
3. DESIGN SPAN	L:	64.00 FT
4. MIN. MID-SPAN POS. CAMBER @ RELEASE (PRESTRESSED UNITS)	Δ:	2.00 INCH
5. PRESTRESSING STRAND (0.60 INCH DIAMETER - LOW RELAX)	f_y:	270 KSI
6. PRESTRESSED CONCRETE STRENGTH	f'_c:	9.0 KSI
7. PRESTRESSED CONCRETE RELEASE STRENGTH	f'_{ci}:	7.0 KSI
8. CONCRETE, HIGH PERFORMANCE CLASS AA	f'_c:	- - -
9. CONCRETE, HIGH PERFORMANCE CLASS A	f'_c:	- - -
10. CONCRETE, HIGH PERFORMANCE CLASS B	f'_c:	- - -
11. CONCRETE, CLASS C	f'_c:	- - -
12. REINFORCING STEEL	f_y:	60 KSI
13. STRUCTURAL STEEL AASHTO M270	f_y:	- - -
14. SOIL UNIT WEIGHT	γ:	- - -
15. NOMINAL BEARING RESISTANCE OF SOIL	q_n:	- - -
16. SOIL BEARING RESISTANCE FACTOR (REFER TO AASHTO LRFD)	ϕ:	- - -
17. NOMINAL BEARING RESISTANCE OF ROCK	q_n:	- - -
18. ROCK BEARING RESISTANCE FACTOR (REFER TO AASHTO LRFD)	ϕ:	- - -
19. NOMINAL AXIAL PILE RESISTANCE	q_p:	- - -
20. PILE YIELD STRENGTH ASTM A572	f_y:	50 KSI
21. PILE SIZE		HP 14X 89
22. EST. AVG. PILE LENGTH	L_p:	30 FT
23. PILE RESISTANCE FACTOR	ϕ:	- - -
24. LATERAL PILE DEFLECTION	Δ:	- - -
25. BASIC WIND SPEED	V_{3s}:	- - -
26. MINIMUM GROUND SNOW LOAD	p_g:	- - -
27. SEISMIC DATA — PGA: - - -	S_s:	- - -
	S_1:	- - -

PROJECT NAME: **ROCHESTER**
PROJECT NUMBER: **BRF 0162(16)**

FILE NAME: z10c418 PI.xls
PROJECT LEADER: G.S. GOODRICH
DESIGNED BY: G.S. GOODRICH
BR 15 PRELIMINARY INFORMATION SHEET

PLOT DATE: 6/18/2014
DRAWN BY: E.A. FIALA
CHECKED BY: S.E. BURBANK
SHEET 60 OF 238

VHB 57526

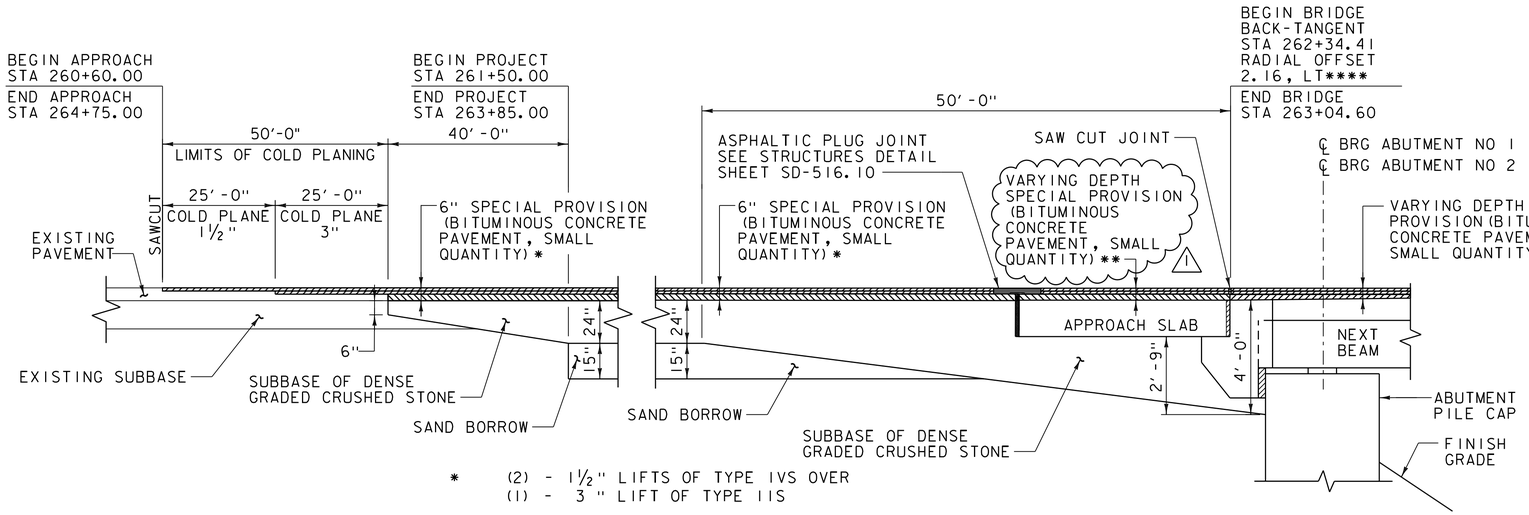

* (2) - 1½" LIFTS OF TYPE IVS OVER
(1) - 3" LIFT OF TYPE IIS

** (2) - 11#2" LIFTS OF TYPE IVS OVER
(1) - 3½" LIFT OF TYPE IIS

*** (2) - 1½" LIFTS OF TYPE IVS
(1) - VARIABLE LIFT OF TYPE IVS (0" MIN, 3" MAX)

**** BEGIN BRIDGE IS ALONG THE BACKTANGENT OF CURVE NO 1, AT THE INTERSECTION OF THE APPROACH SLAB SEAT.

NOTE: EMULSIFIED ASPHALT IS TO BE APPLIED AT A RATE OF 0.040 GAL/SY BETWEEN ALL LIFTS OF BITUMINOUS CONCRETE PAVEMENT AND ON THE EXISTING PAVEMENT AND THE APPROACH SLAB PRIOR TO PLACING THE FIRST LIFT, AS DIRECTED BY THE ENGINEER.

APPROACH SECTION
NOT TO SCALE

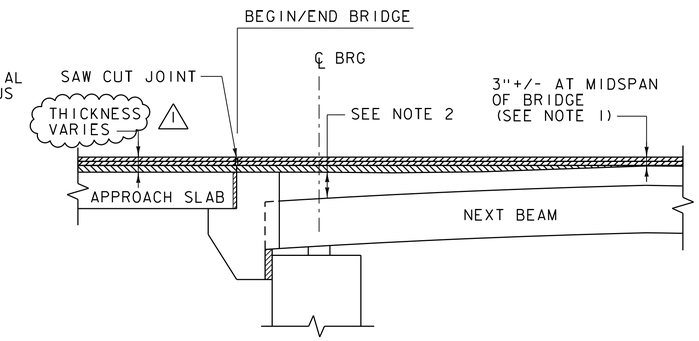

NOTES:

1. PAVEMENT THICKNESS VARIES ON BRIDGE TO ACCOUNT FOR CAMBER. SEE BR 15 NEXT BEAM DETAILS (2 OF 4) FOR PAVEMENT THICKNESS IN PRECAST CONCRETE PARAPET HEIGHT DETAIL.
2. FLANGE THICKNESS VARIES TO ACCOUNT FOR SAG VERTICAL CURVE ON BRIDGE. SEE BR 15 NEXT BEAM DETAILS (3 OF 4) FOR THICKENED FLANGE AT BEAM ENDS DETAIL.

PAVEMENT TRANSITION DETAIL
NOT TO SCALE

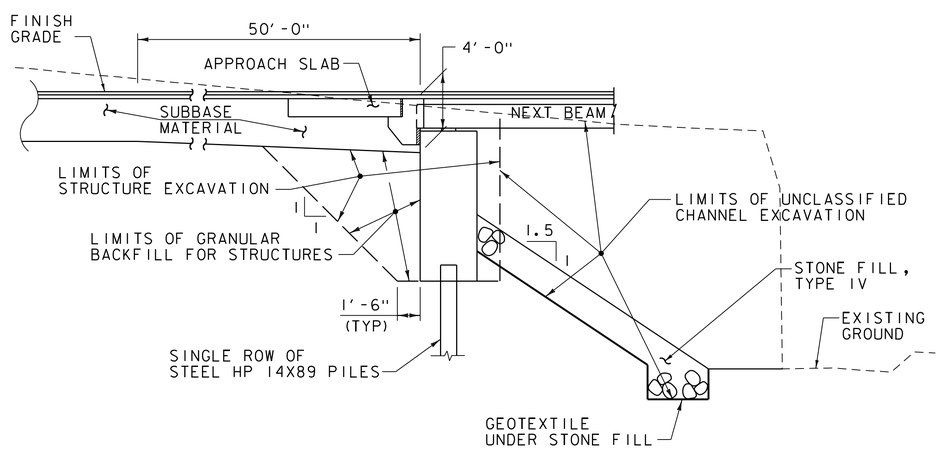

NOTE: ACTUAL STRUCTURE EXCAVATION LIMITS SHALL BE DETERMINED BY THE CONTRACTOR. HOWEVER, ONLY THE EXCAVATION BETWEEN THE LIMITS SHOWN FOR STRUCTURE EXCAVATION WILL BE PAID FOR UNDER ITEM 204.25 "STRUCTURE EXCAVATION". EXCAVATION OUTSIDE OF THESE LIMITS OR OUTSIDE OF THE UNCLASSIFIED CHANNEL EXCAVATION LIMITS WILL BE THE EXPENSE OF THE CONTRACTOR.

ABUTMENT EARTHWORK SECTION
NOT TO SCALE

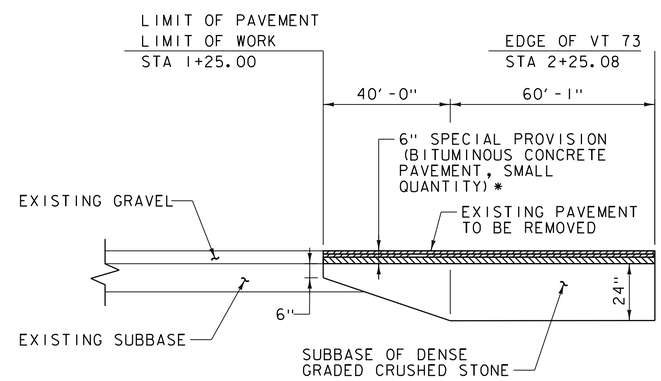

* (2) - 1½" LIFTS OF TYEP IVS OVER
(1) - 3" LIFT OF TYPE IIS

BINGO ROAD APPROACH SECTION
NOT TO SCALE

REVISION	DESCRIPTION	DATE
1	DIMENSION CHANGES	6/19/2014

PROJECT NAME: ROCHESTER
PROJECT NUMBER: BRF 0162(16)

FILE NAME: z10c418typ.dgn
PROJECT LEADER: G.S. GOODRICH
DESIGNED BY: C.L. CILLEY
BR 15 TYPICAL EARTHWORK SECTIONS

PLOT DATE: 6/18/2014
DRAWN BY: C.L. CILLEY
CHECKED BY: D.M. PECK
SHEET 63 OF 238

Vanasse Hangen Brustlin, Inc.

VHB 57526

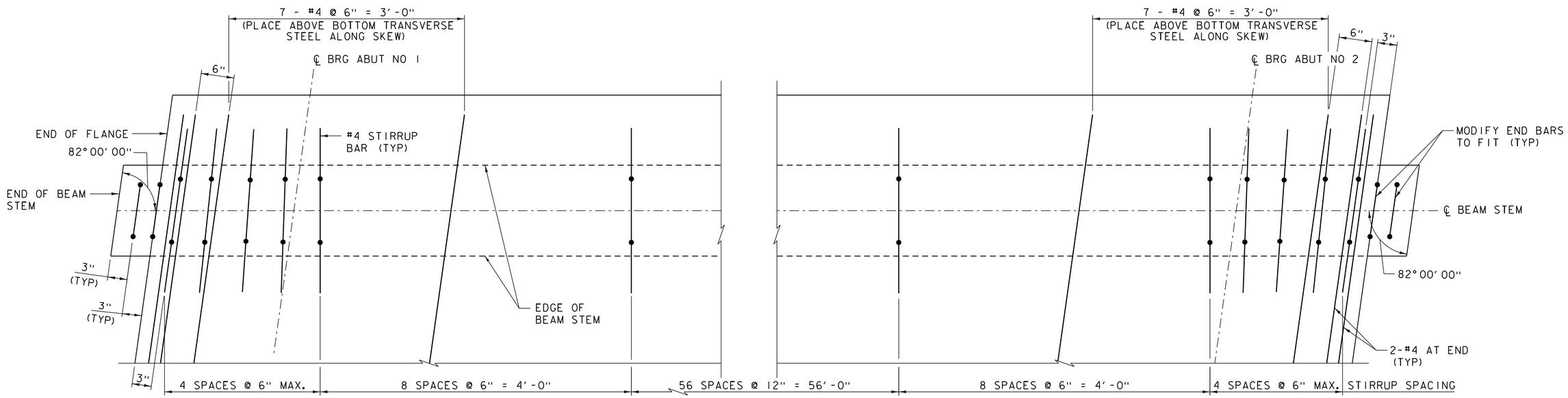

END REINFORCING PLAN

TYPICAL ALL UNITS
SCALE 1½" = 1'-0"

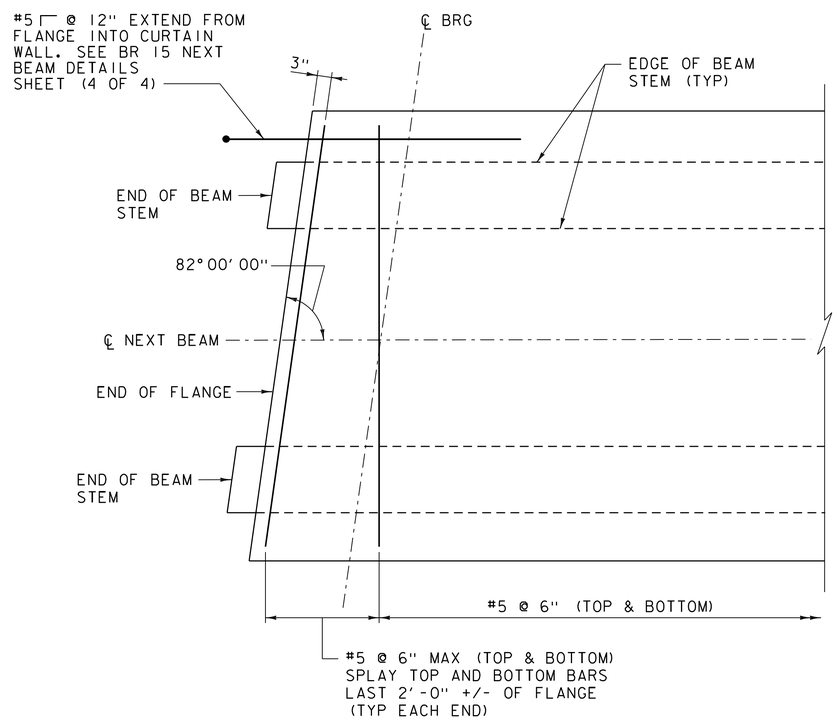

TYPICAL TRANSVERSE FLANGE REINFORCING STEEL DETAIL

TYPICAL ALL UNITS
SCALE ¾" = 1'-0"

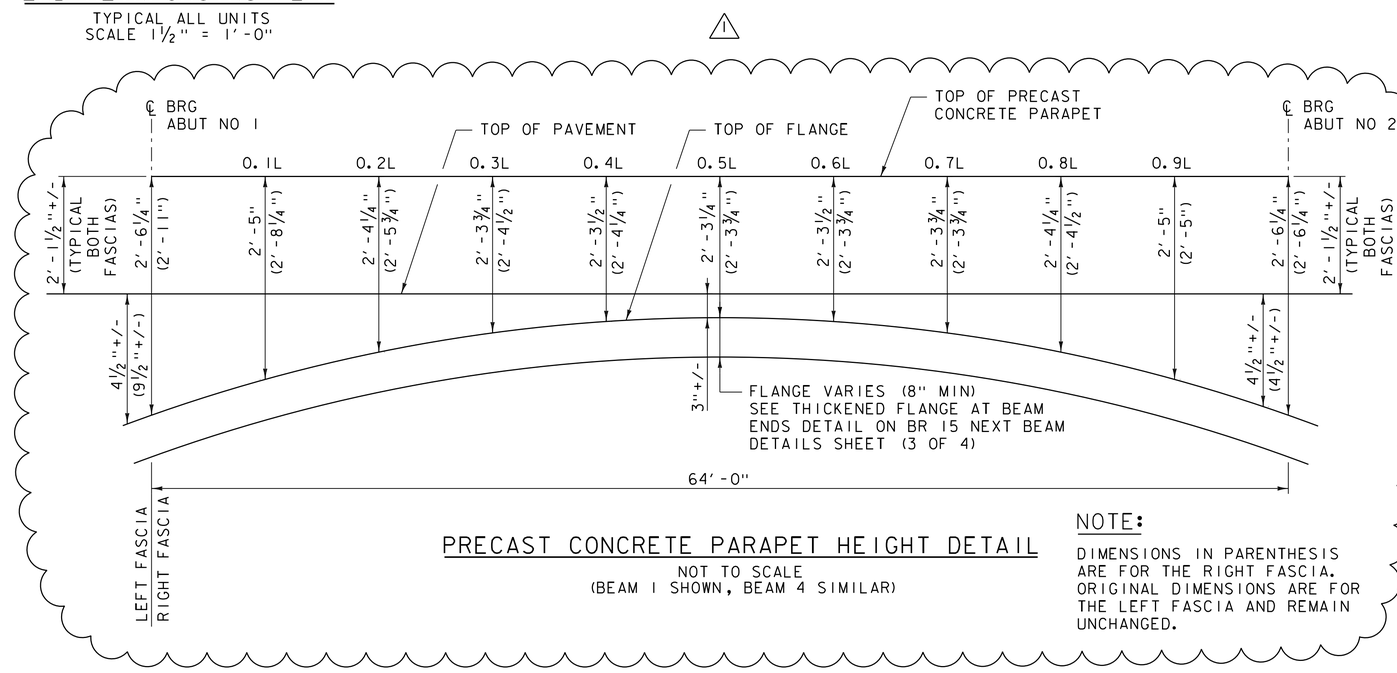

PRECAST CONCRETE PARAPET HEIGHT DETAIL

NOT TO SCALE
(BEAM 1 SHOWN, BEAM 4 SIMILAR)

NOTE:

DIMENSIONS IN PARENTHESIS ARE FOR THE RIGHT FASCIA. ORIGINAL DIMENSIONS ARE FOR THE LEFT FASCIA AND REMAIN UNCHANGED.

NOTE:

NF = NEAR FACE
FF = FAR FACE
EF = EACH FACE
▲ = CUT TO FIT IN FIELD
3" CLEAR, UNLESS OTHERWISE SPECIFIED ON THE PLANS.
2'-2" BAR LAP UNLESS OTHERWISE SPECIFIED ON THE PLANS.

VHB Vanasse Hangen Brustlin, Inc.

REVISION	DESCRIPTION	DATE
1	DIMENSION CHANGES	6/19/2014

PROJECT NAME: ROCHESTER
PROJECT NUMBER: BRF 0162(16)

FILE NAME: z10c418sup.dgn
PROJECT LEADER: G.S. GOODRICH
DESIGNED BY: J.J. WESTCOTT
BR 15 NEXT BEAM DETAILS (2 OF 4)

PLOT DATE: 6/18/2014
DRAWN BY: B.J. MASSE
CHECKED BY: L.S. CHERVINCKY
SHEET 86 OF 238

VHB 57526

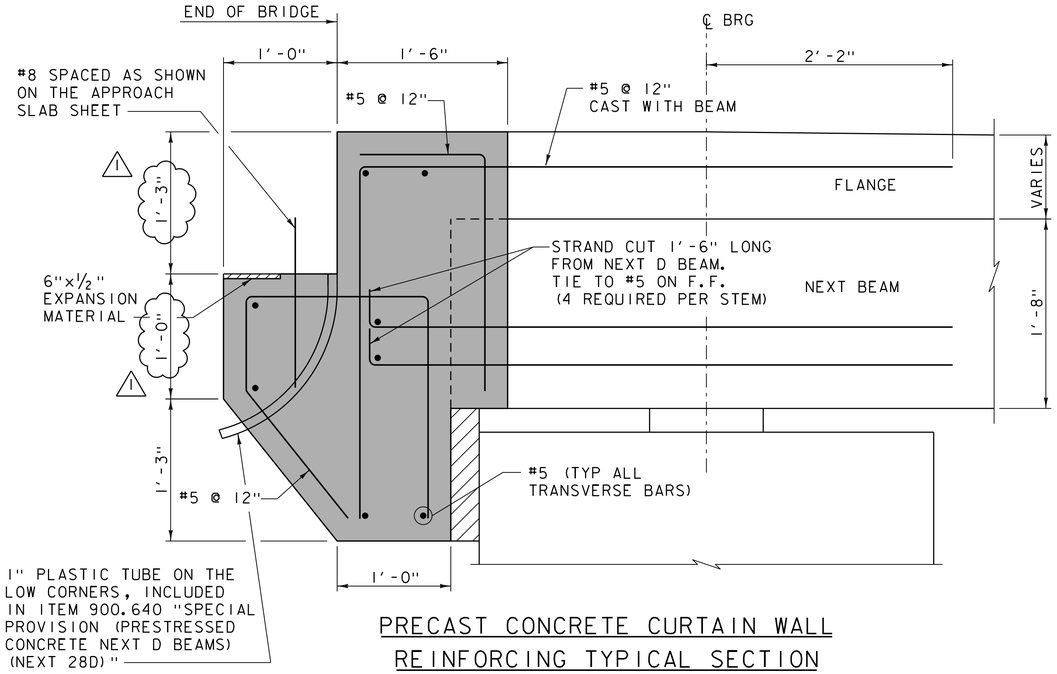

PRECAST CONCRETE CURTAIN WALL REINFORCING TYPICAL SECTION

(ABUT NO 1 SHOWN, ABUT NO 2 SIMILAR, OPPOSITE HAND)
(DIMENSIONS ARE NORMAL TO ℄ BRG)
SCALE 1½" = 1'-0"

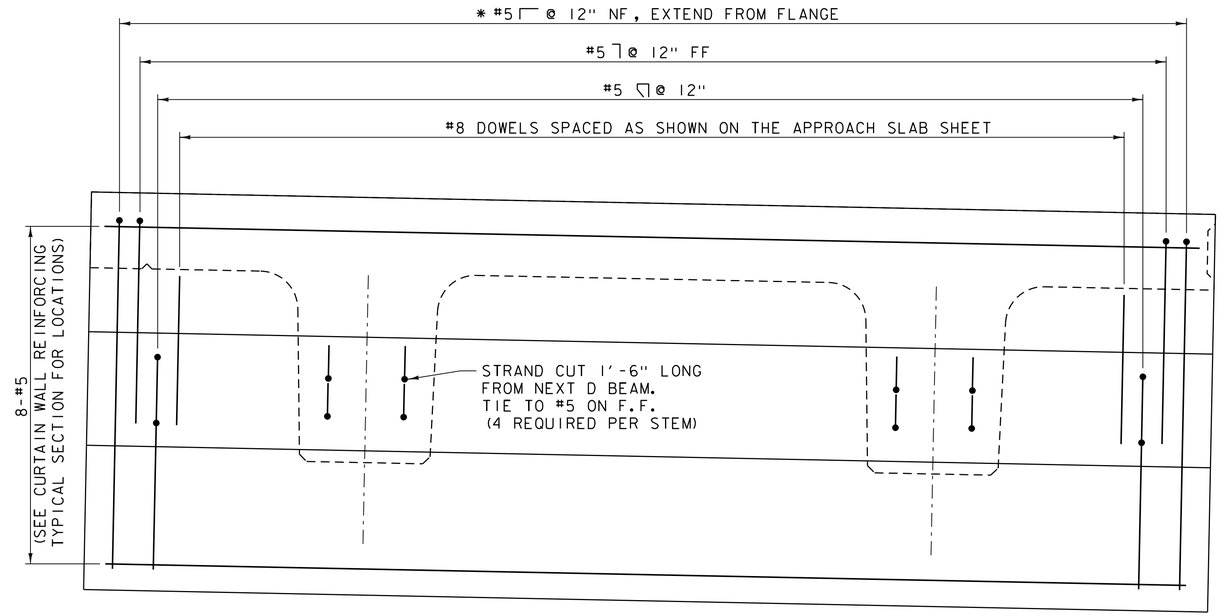

* 12 ADDITIONAL BARS SHALL BE USED AT THE JOINT LOCATIONS. PAYMENT SHALL BE INCIDENTAL TO ITEM 900.640 SPECIAL PROVISION (PRESTRESSED CONCRETE NEXT D BEAMS) (NEXT 28D).

PRECAST CONCRETE CURTAIN WALL REINFORCING ELEVATION

SCALE 1½" = 1'-0"

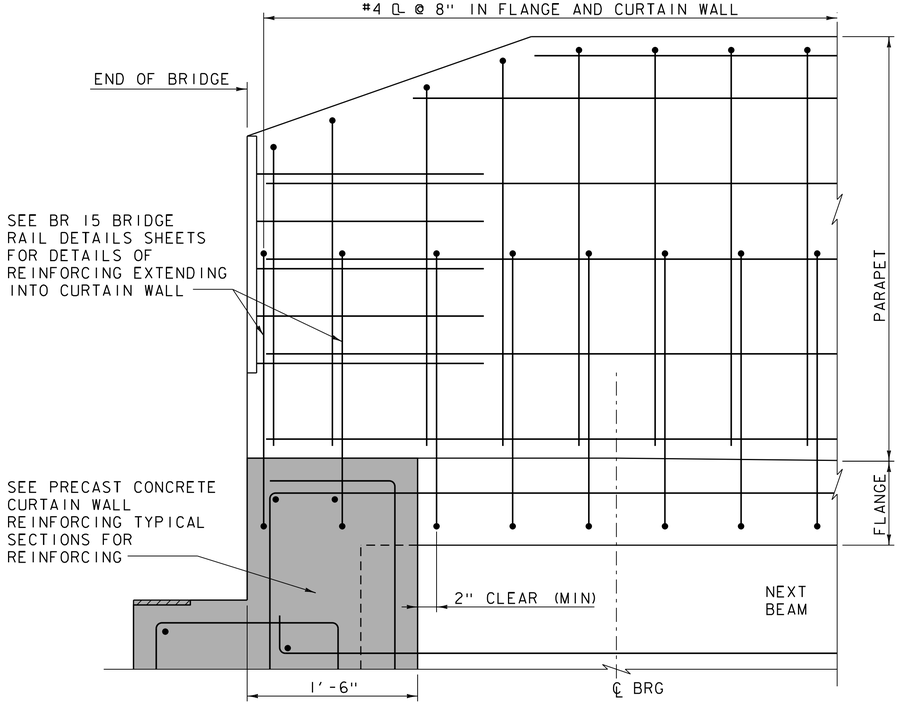

PRECAST CONCRETE CURTAIN WALL REINFORCING AT PARAPET SECTION

(AT UNITS 1 AND 4 ONLY)
SCALE 1½" = 1'-0"

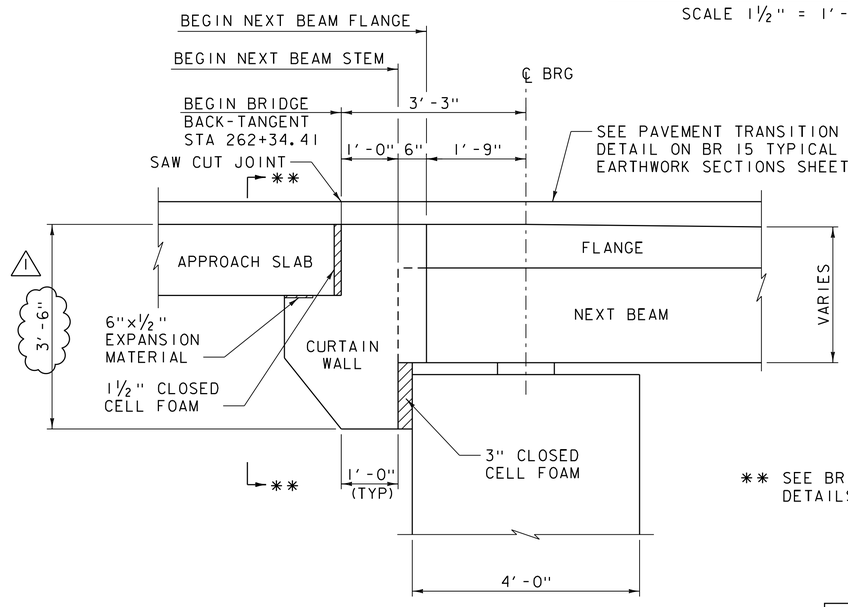

BRIDGE END DETAIL

(ABUT NO 1 SHOWN, ABUT NO 2 SIMILAR, OPPOSITE HAND)
(DIMENSIONS ARE NORMAL TO ℄ BRG)
SCALE ¾" = 1'-0"

NOTE:

NF = NEAR FACE
FF = FAR FACE
EF = EACH FACE
▲ = CUT TO FIT IN FIELD
3" CLEAR, UNLESS OTHERWISE SPECIFIED ON THE PLANS.
2'-2" BAR LAP UNLESS OTHERWISE SPECIFIED ON THE PLANS.

** SEE BR 15 CURTAIN WALL DETAILS SHEET (2 OF 2)

= LIMITS OF PRECAST CONCRETE CURTAIN WALL

REVISION	DESCRIPTION	DATE
1	DIMENSION CHANGES	6/19/2014

PROJECT NAME: ROCHESTER
PROJECT NUMBER: BRF 0162(16)

FILE NAME: z10c418sub.dgn
PROJECT LEADER: G.S. GOODRICH
DESIGNED BY: J.J. WESTCOTT
BR 15 NEXT BEAM DETAILS (4 OF 4)
PLOT DATE: 6/18/2014
DRAWN BY: B.J. MASSE
CHECKED BY: L.S. CHERVINCKY
SHEET 88 OF 238

VHB Vanasse Hangen Brustlin, Inc.

VHB 57526

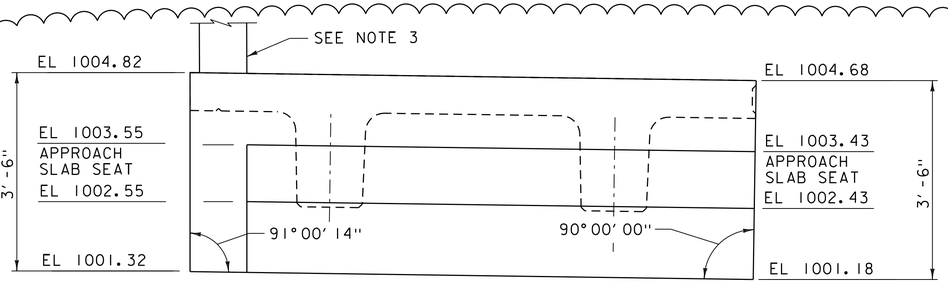

ABUTMENT NO 1, NEXT 1

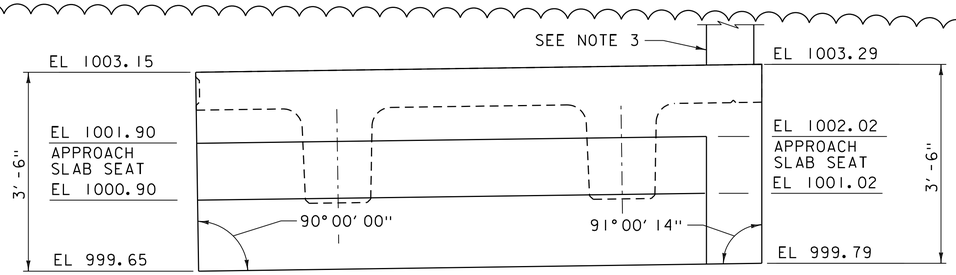

ABUTMENT NO 2, NEXT 1

SCALE 3/4" = 1'-0"

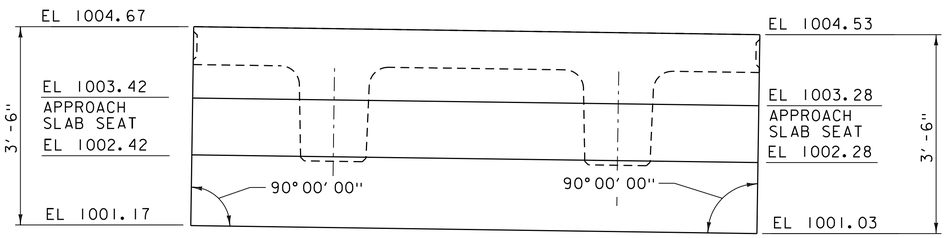

ABUTMENT NO 1, NEXT 2

SCALE 3/4" = 1'-0"

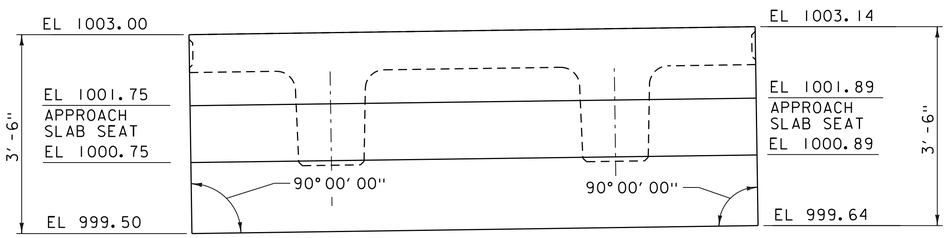

ABUTMENT NO 2, NEXT 2

SCALE 3/4" = 1'-0"

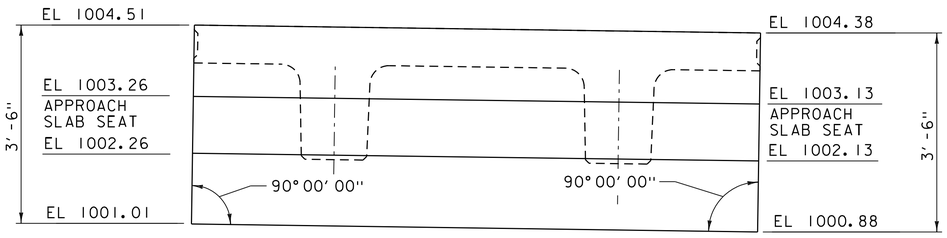

ABUTMENT NO 1, NEXT 3

SCALE 3/4" = 1'-0"

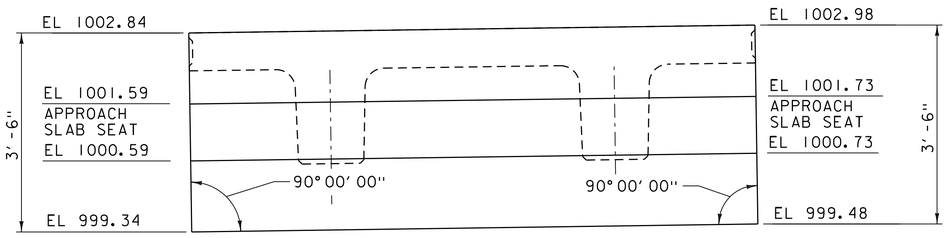

ABUTMENT NO 2, NEXT 3

SCALE 3/4" = 1'-0"

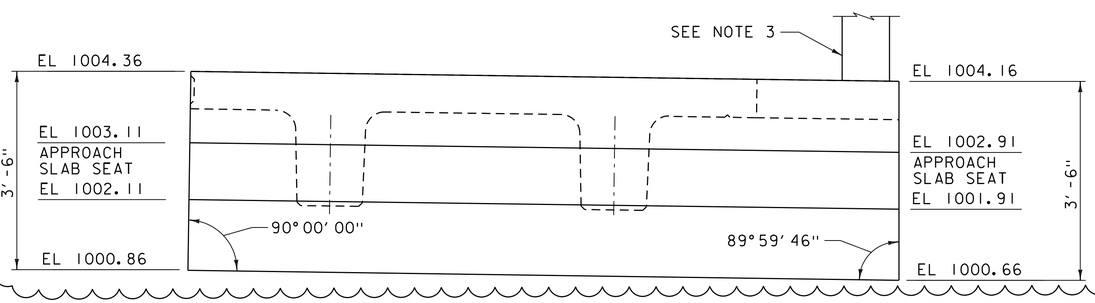

ABUTMENT NO 1, NEXT 4

SCALE 3/4" = 1'-0"

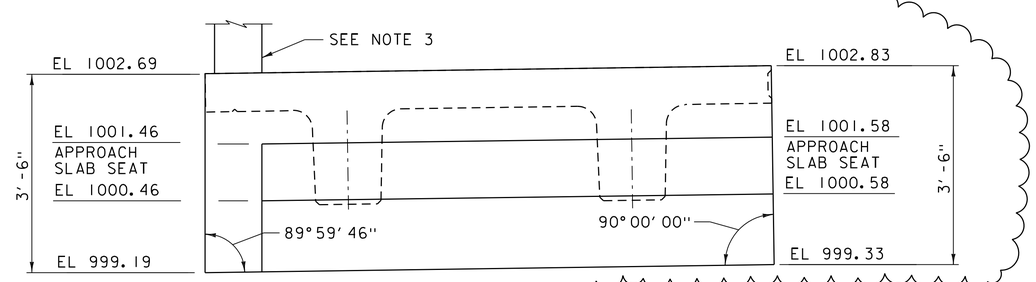

ABUTMENT NO 2, NEXT 4

SCALE 3/4" = 1'-0"

NOTES:

1. SEE BR 15 CURTAIN WALL DETAIL SHEET (1 OF 2) FOR HORIZONTAL DIMENSIONS AND CURTAIN WALL LIMITS.
2. SEE BR 15 NEXT BEAM DETAILS SHEET (4 OF 4) FOR PRECAST CURTAIN WALL SECTION AND REINFORCING INFORMATION.
3. SEE PARAPET HEIGHT DETAIL ON BR 15 NEXT BEAM DETAILS SHEET (2 OF 4).

REVISION	DESCRIPTION	DATE
1	ELEVATION CHANGES	6/19/2014

PROJECT NAME: ROCHESTER
PROJECT NUMBER: BRF 0162(16)

FILE NAME: z10c418sup.dgn
PROJECT LEADER: G.S. GOODRICH
DESIGNED BY: J.J. WESTCOTT
BR 15 CURTAIN WALL DETAILS (2 OF 2)

PLOT DATE: 6/18/2014
DRAWN BY: B.J. MASSE
CHECKED BY: L.S. CHERVINCKY
SHEET 90 OF 238

VHB Vanasse Hangen Brustlin, Inc.

VHB 57526

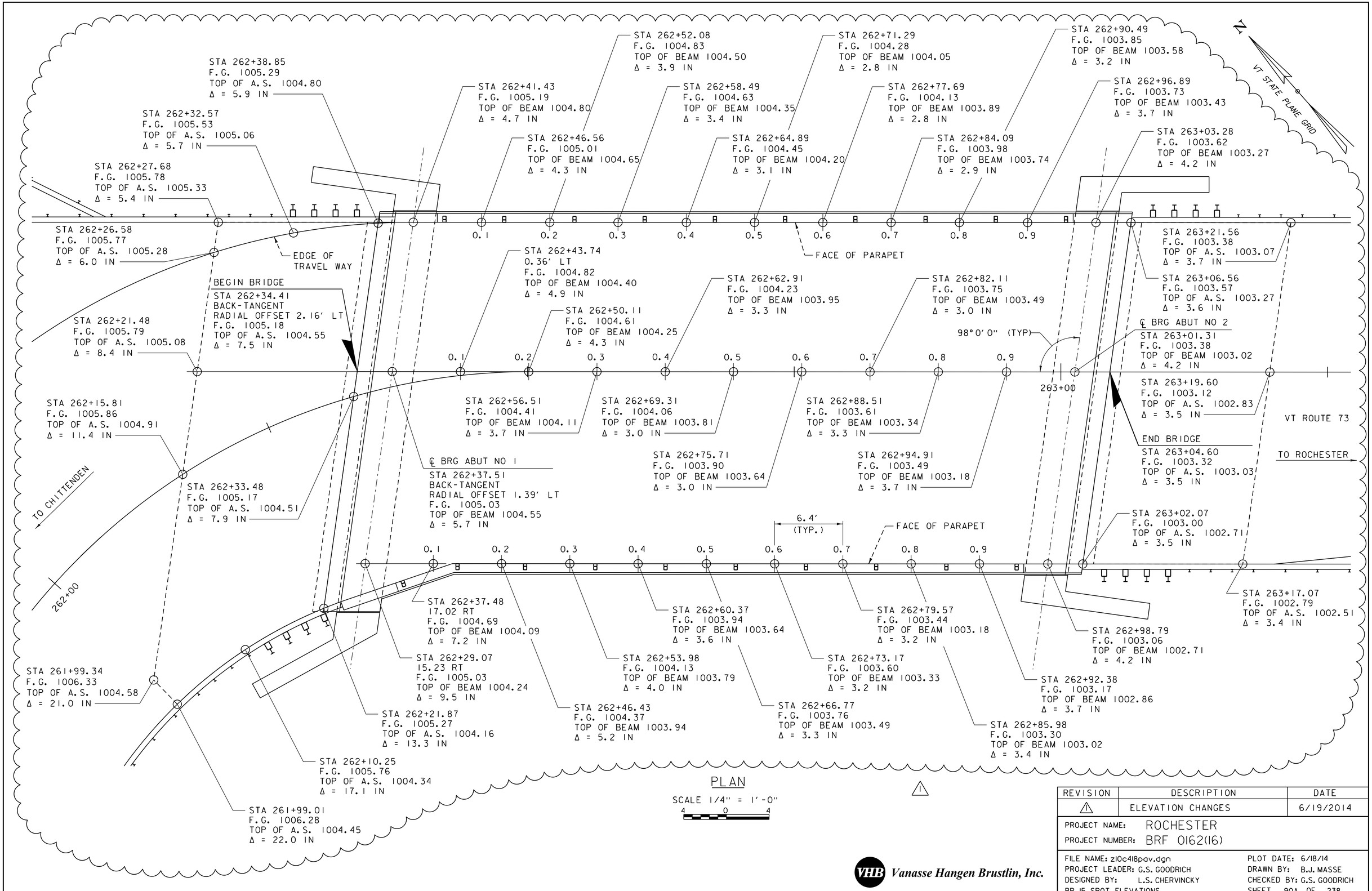

REVISION	DESCRIPTION	DATE
1	ELEVATION CHANGES	6/19/2014

PROJECT NAME: ROCHESTER
PROJECT NUMBER: BRF 0162(16)

FILE NAME: z10c418pav.dgn
PROJECT LEADER: G.S. GOODRICH
DESIGNED BY: L.S. CHERVINCKY
BR 15 SPOT ELEVATIONS

PLOT DATE: 6/18/14
DRAWN BY: B.J. MASSE
CHECKED BY: G.S. GOODRICH
SHEET 90A OF 238

VHB Vanasse Hangen Brustlin, Inc.

VHB 57526

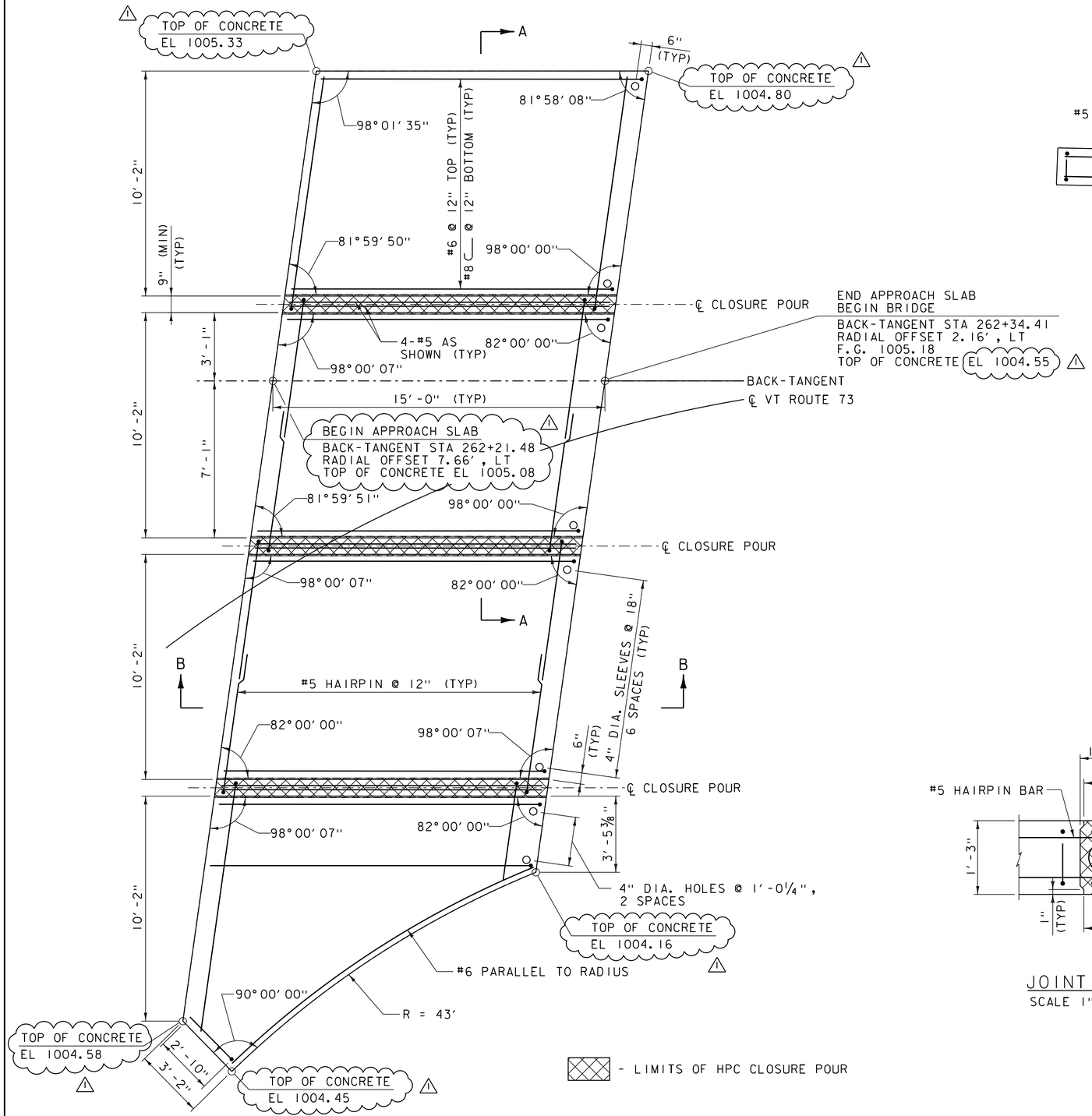

APPROACH SLAB NO 1 PLAN

SCALE 3/8" = 1'-0"

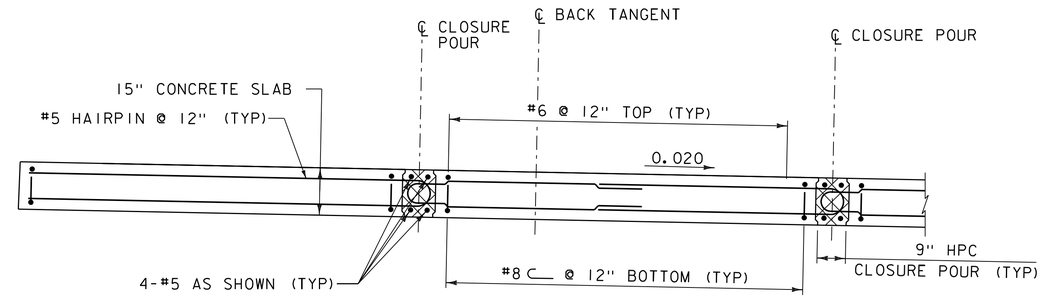

SECTION A-A

SCALE 1/2" = 1'-0"

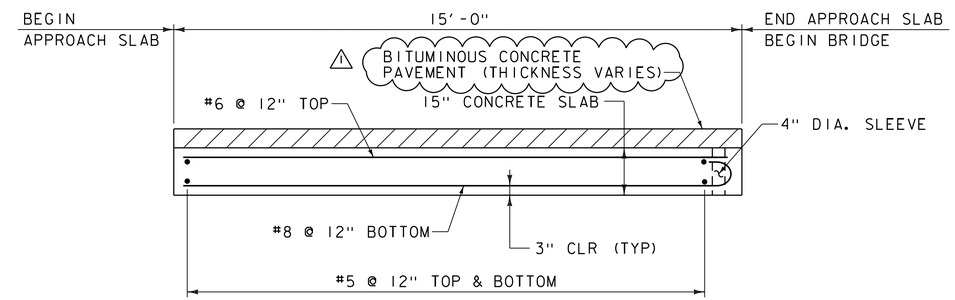

SECTION B-B

SCALE 1/2" = 1'-0"

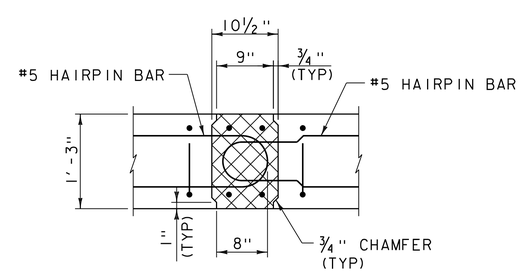

JOINT DETAIL

SCALE 1" = 1'-0"

NOTE:

NF = NEAR FACE
FF = FAR FACE
EF = EACH FACE
▲ = CUT TO FIT IN FIELD
3" CLEAR, UNLESS OTHERWISE SPECIFIED ON THE PLANS.
2'-2" BAR LAP UNLESS OTHERWISE SPECIFIED ON THE PLANS.

NOTES:

1. LIFTING POINTS IN APPROACH SLABS TO BE LOCATED BY FABRICATOR.
2. 4" DIA. SLEEVES FOR APPROACH SLAB DOWELS ARE LOCATED TO AVOID JOINTS IN PRECAST CURTAIN WALLS. SEE BR 15 CURTAIN WALL SHEET (1 OF 2).
3. CONTRACTOR SHALL PROVIDE METHOD AND DETAILS FOR ESTABLISHING CONTINUOUS CONTACT WITH SUBGRADE AND SUPPORT FOR PRECAST APPROACH SLABS WITH THE FABRICATION DRAWINGS.

REVISION	DESCRIPTION	DATE
1	ELEVATION CHANGES	6/19/2014

PROJECT NAME: ROCHESTER
PROJECT NUMBER: BRF 0162(16)

Vanasse Hangen Brustlin, Inc.

FILE NAME: z10c418slab.dgn
PROJECT LEADER: G.S. GOODRICH
DESIGNED BY: E.A. FIALA
BR 15 PRECAST APPROACH SLAB (1 OF 2)
PLOT DATE: 6/18/2014
DRAWN BY: E.A. FIALA
CHECKED BY: L.S. CHERVINCKY
SHEET 92 OF 238

VHB 57526

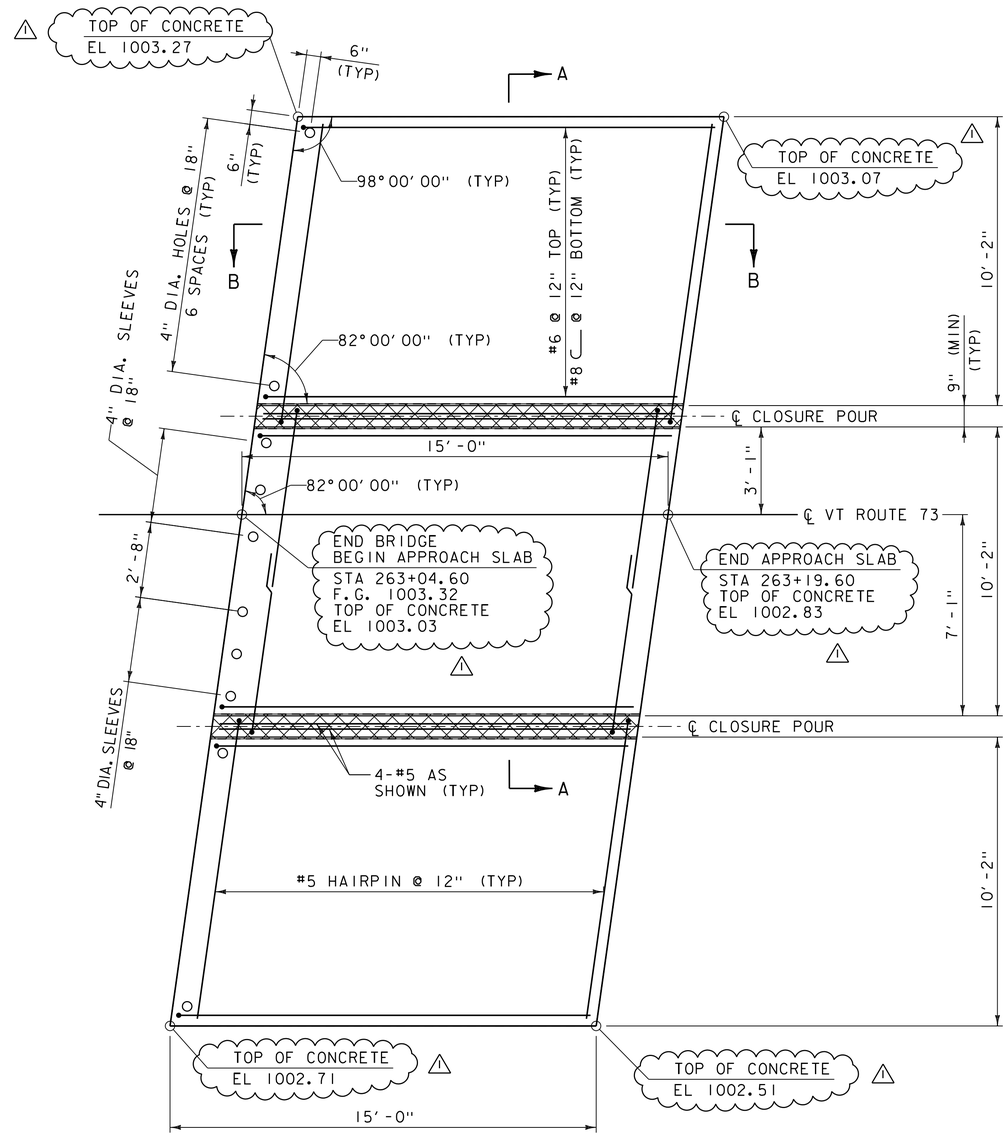

APPROACH SLAB NO 2 PLAN

SCALE 3/8" = 1' -0"

NOTE:

NF = NEAR FACE
FF = FAR FACE
EF = EACH FACE
▲ = CUT TO FIT IN FIELD
3" CLEAR, UNLESS OTHERWISE SPECIFIED ON THE PLANS.
2' -2" BAR LAP UNLESS OTHERWISE SPECIFIED ON THE PLANS.

NOTES:

1. LIFTING POINTS IN APPROACH SLABS TO BE LOCATED BY FABRICATOR.
2. 4" DIA. SLEEVES FOR APPROACH SLAB DOWELS ARE LOCATED TO AVOID JOINTS IN PRECAST CURTAIN WALLS. SEE BR 15 CURTAIN WALL SHEET (1 OF 2).
3. CONTRACTOR SHALL PROVIDE METHOD AND DETAILS FOR ESTABLISHING CONTINUOUS CONTACT WITH SUBGRADE AND SUPPORT FOR PRECAST APPROACH SLABS WITH FABRICATION DRAWINGS.
4. SEE BR 15 PRECAST APPROACH SLAB SHEET (1 OF 2) FOR SECTIONS A-A AND B-B.

REVISION	DESCRIPTION	DATE
1	ELEVATION CHANGES	6/19/2014

PROJECT NAME: ROCHESTER
PROJECT NUMBER: BRF 0162(16)

FILE NAME: z10z418slab.dgn
PROJECT LEADER: G.S. GOODRICH
DESIGNED BY: E.A. FIALA
BR 15 PRECAST APPROACH SLAB (2 OF 2)

PLOT DATE: 6/18/2014
DRAWN BY: E.A. FIALA
CHECKED BY: L.S. CHERVINCKY
SHEET 93 OF 238

Vanasse Hangen Brustlin, Inc.

VHB 57526

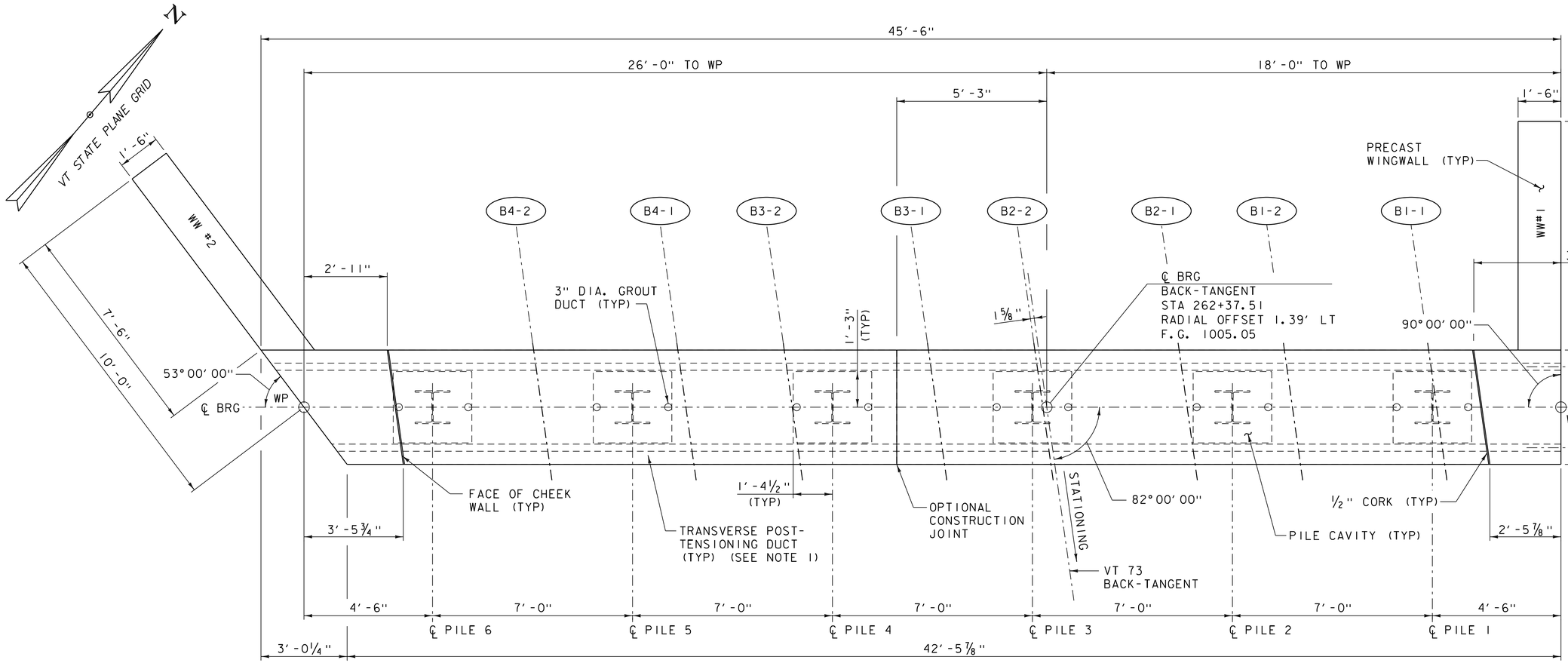

NOTES:

1. TRANSVERSE POST-TENSIONING AND ASSOCIATED ITEMS ONLY REQUIRED IF PILE CAP IS CONSTRUCTED OF MORE THAN ONE UNIT.
2. SEE BR 15 ABUTMENT SECTIONS SHEET FOR SECTIONS A-A AND B-B.

ABUTMENT NO 1 PLAN

SCALE ½" = 1'-0"

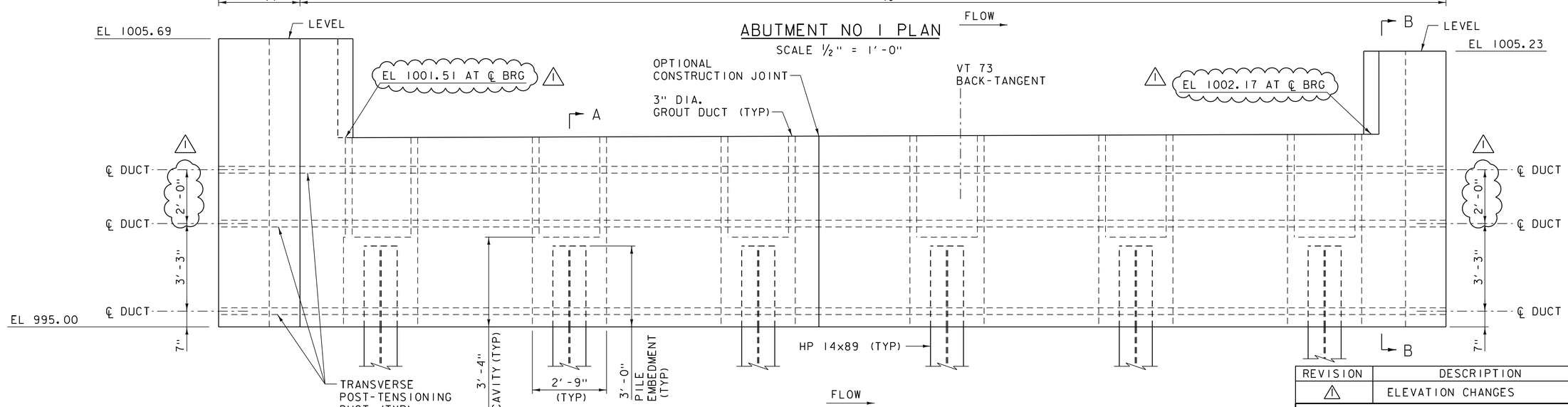

ABUTMENT NO 1 ELEVATION

SCALE ½" = 1'-0"

REVISION	DESCRIPTION	DATE
1	ELEVATION CHANGES	6/19/2014

PROJECT NAME: ROCHESTER
PROJECT NUMBER: BRF 0162(16)

FILE NAME: z85e035sub.dgn
PROJECT LEADER: G.S. GOODRICH
DESIGNED BY: E.A. FIALA
BR 15 ABUTMENT NO 1 PLAN & ELEVATION

PLOT DATE: 6/18/2014
DRAWN BY: C.L. CILLEY
CHECKED BY: L.S. CHERVINCKY
SHEET 94 OF 238

VHB Vanasse Hangen Brustlin, Inc.

VHB 57526

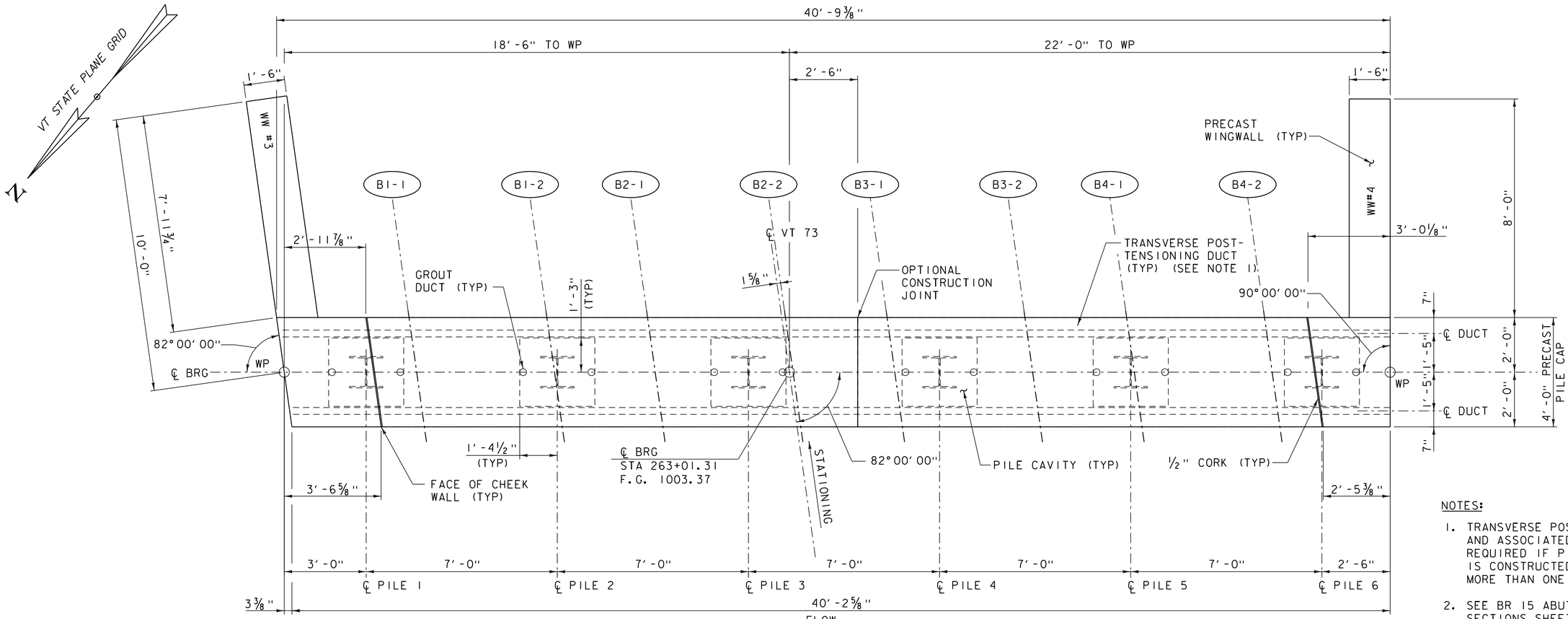

ABUTMENT NO 2 PLAN

SCALE 1/2" = 1'-0"

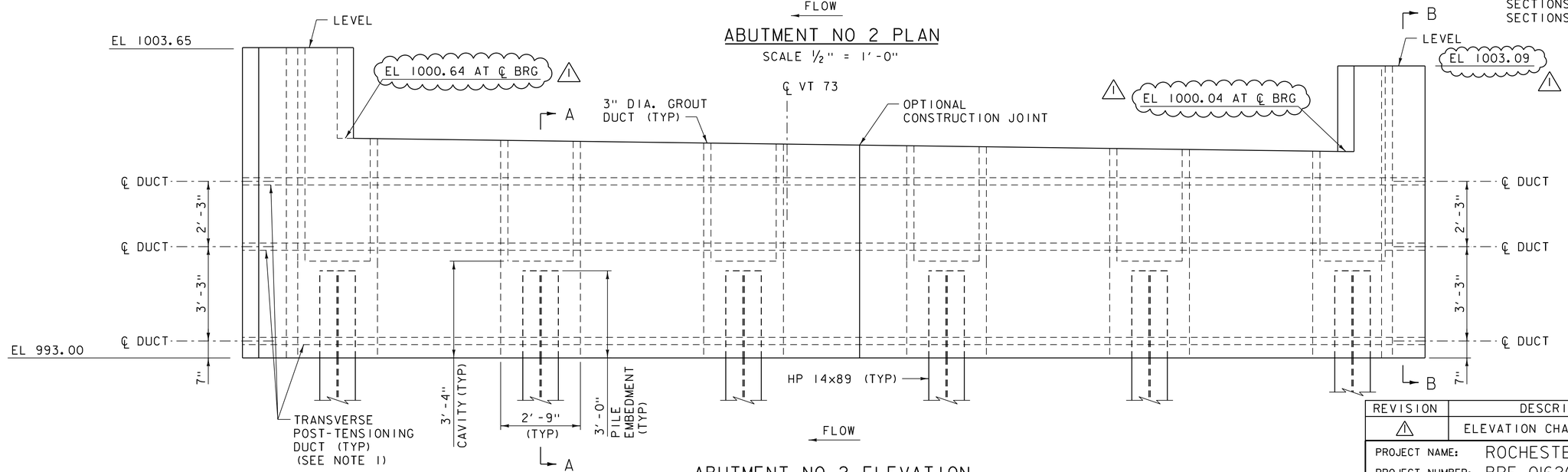

ABUTMENT NO 2 ELEVATION

SCALE 1/2" = 1'-0"

NOTES:

1. TRANSVERSE POST-TENSIONING AND ASSOCIATED ITEMS ONLY REQUIRED IF PILE CAP IS CONSTRUCTED OF MORE THAN ONE UNIT.
2. SEE BR 15 ABUTMENT SECTIONS SHEET FOR SECTIONS A-A AND B-B.

REVISION	DESCRIPTION	DATE
1	ELEVATION CHANGES	6/19/2014

PROJECT NAME: ROCHESTER
PROJECT NUMBER: BRF 0162(16)

FILE NAME: z85e035sub.dgn
PROJECT LEADER: G.S. GOODRICH
DESIGNED BY: E.A. FIALA
BR 15 ABUTMENT NO 2 PLAN & ELEVATION

PLOT DATE: 6/18/2014
DRAWN BY: C.L. CILLEY
CHECKED BY: L.S. CHERVINCKY
SHEET 95 OF 238

VHB Vanasse Hangen Brustlin, Inc.

VHB 57526

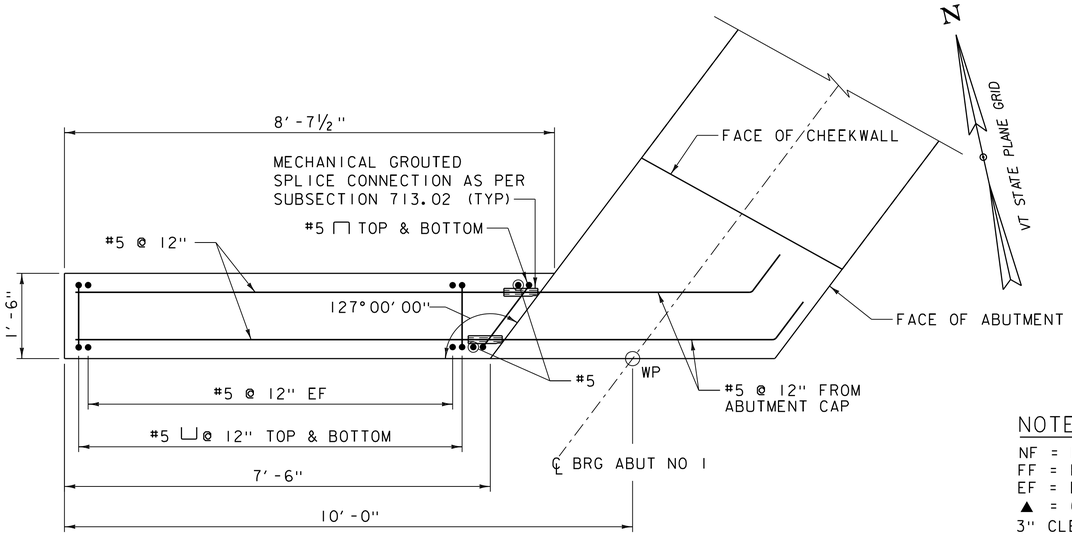

WINGWALL NO 2 PLAN
SCALE ¾" = 1'-0"

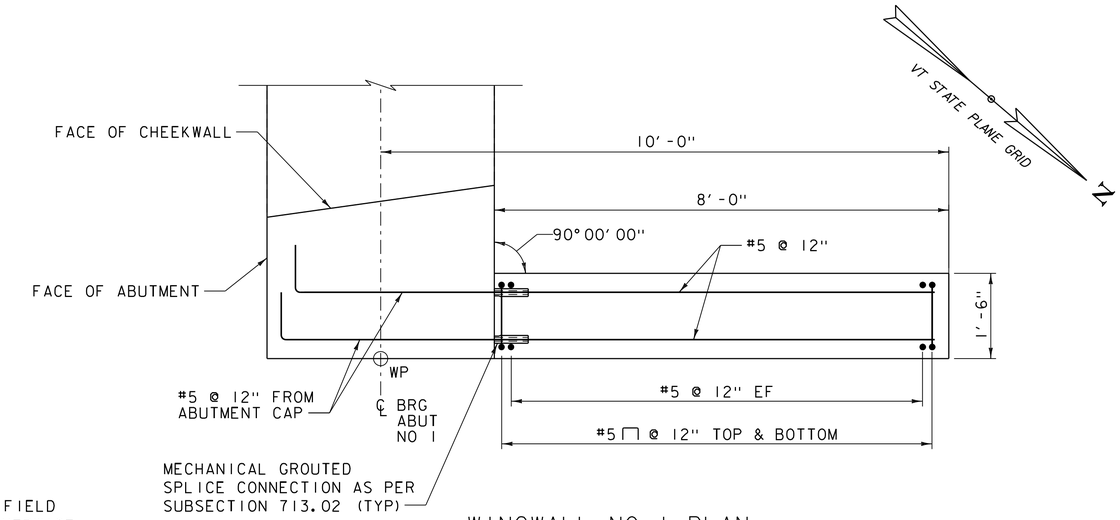

WINGWALL NO 1 PLAN
(WINGWALL NO 1 SHOWN, WINGWALL NO 4 SIMILAR, OPPOSITE HAND)
SCALE ¾" = 1'-0"

NOTE:

NF = NEAR FACE
FF = FAR FACE
EF = EACH FACE
▲ = CUT TO FIT IN FIELD
3" CLEAR, UNLESS OTHERWISE SPECIFIED ON THE PLANS.
2'-2" BAR LAP UNLESS OTHERWISE SPECIFIED ON THE PLANS.

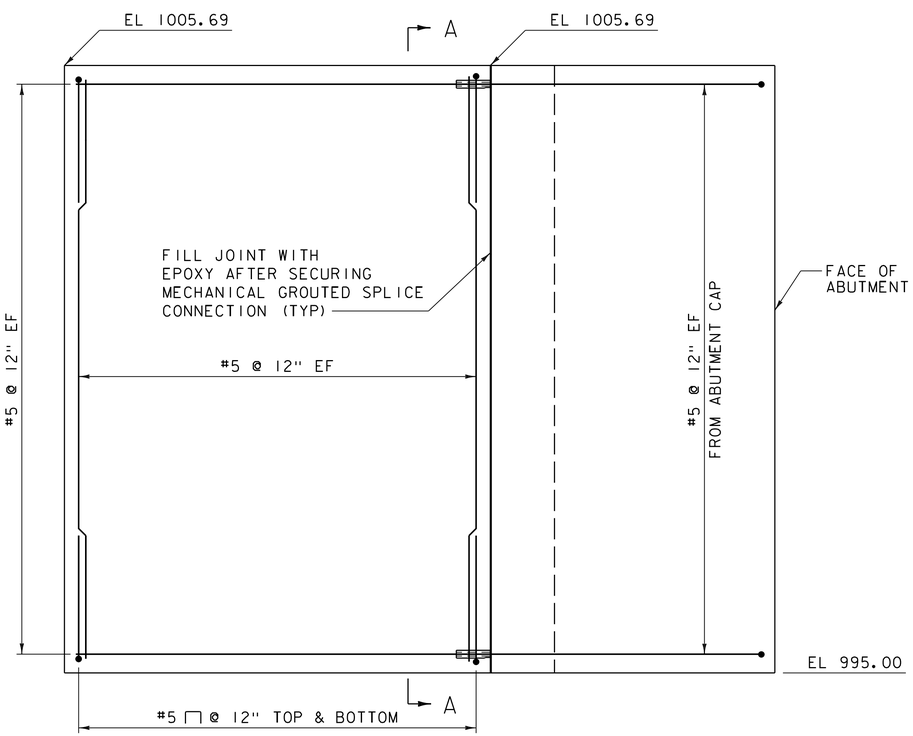

WINGWALL NO 2 ELEVATION
SCALE ¾" = 1'-0"

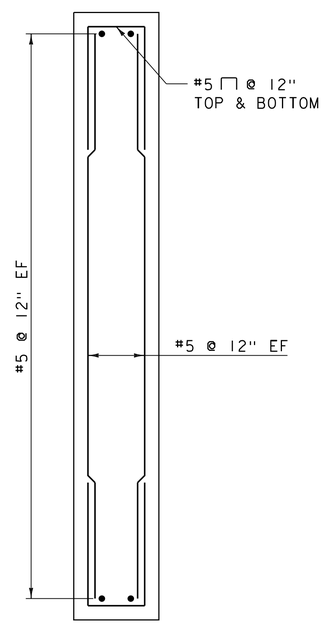

SECTION A-A
SCALE ¾" = 1'-0"

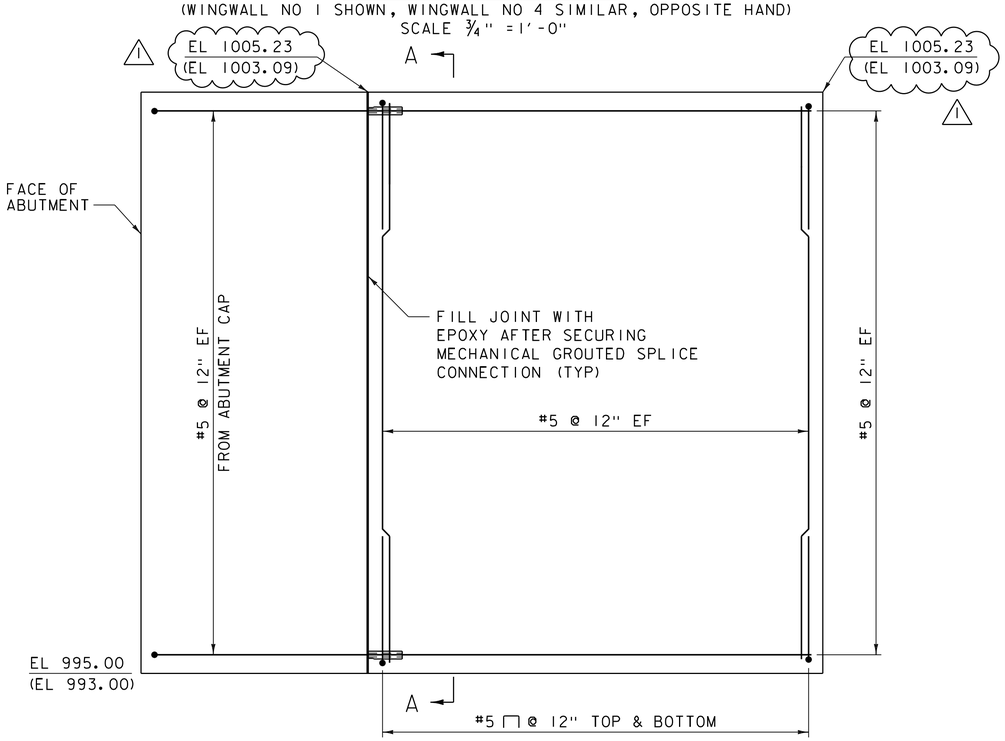

WINGWALL NO 1 ELEVATION
(WINGWALL NO 1 SHOWN, WINGWALL NO 4 SIMILAR, OPPOSITE HAND)
(WINGWALL NO 4 ELEVATION SHOWN IN PARENTHESIS)
SCALE ¾" = 1'-0"

NOTE: EPOXY SHALL BE INCIDENTAL TO THE PRECAST CONCRETE STRUCTURE.

REVISION	DESCRIPTION	DATE
1	ELEVATION CHANGES	6/19/2014

PROJECT NAME: ROCHESTER
PROJECT NUMBER: BRF 0162(16)

FILE NAME: z10c418sub.dgn
PROJECT LEADER: G.S. GOODRICH
DESIGNED BY: E.A. FIALA
BR 15 WINGWALL DETAILS (1 OF 2)
PLOT DATE: 6/18/2014
DRAWN BY: E.A. FIALA
CHECKED BY: L.S. CHERVINCKY
SHEET 98 OF 238

Vanasse Hangen Brustlin, Inc.

VHB 57526