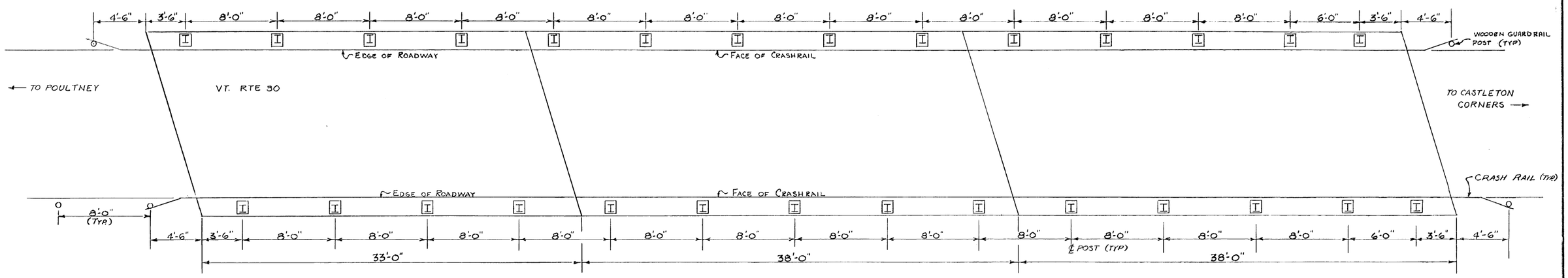

PLAN

NOT TO SCALE

NOTE: ITEM 404-B CONSISTS OF ALL HARDWARE REQUIRED FOR COMPLETE RAILING ASSEMBLY AS DETAILED HEREON, EXCEPT GUARD RAIL CABLE. CONSISTING OF,
- 28 POST ASSEMBLIES
- 28 BRACKETS
- 28 STAY PINS
- 28 CLIP ANGLES
- 240 L.F. CRASH RAIL (APPROX)
- SLEEVES, ANCHOR BOLTS, WASHERS, ETC.

NOTES

1. PAINT ASSEMBLY WITH ONE SHOP COAT OF RED LEAD PER ITEM 404
2. ALL STEEL TO BE A36-63T
3. REFER TO STATE OF VERMONT STANDARD SPECIFICATIONS FOR ROAD AND BRIDGE CONSTRUCTION, ITEM 542 "THREE CABLE GUARD RAIL WITH STEEL POSTS" FOR BRACKET AND STAYPIN MATERIAL SPECIFICATIONS
4. REFER TO STANDARD SHEET G-3 FOR DETAILS NOT SHOWN.

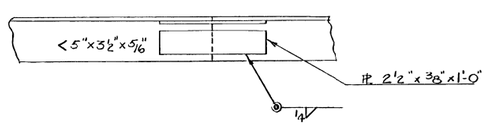

CRASH RAIL SPLICE DETAIL (TYP EACH LEG)
SCALE: 1½" = 1'-0"

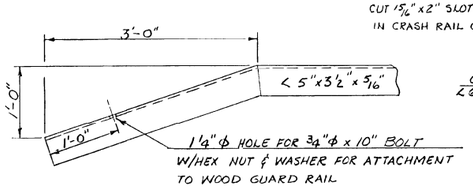

BEND AT ENDS OF CRASH RAIL (TYP)
SCALE: 1" = 1'-0"

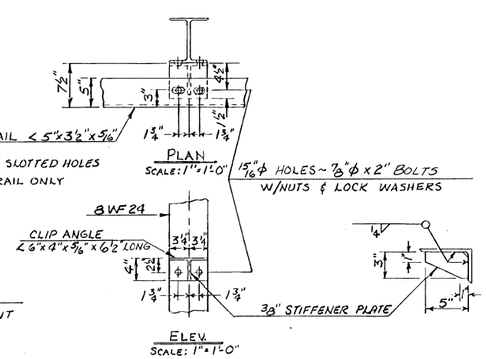

CLIP ANGLE & CRASH RAIL DETAILS

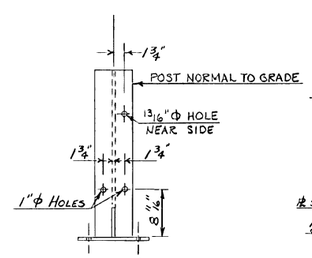

FRONT POST ELEVATION
SCALE: 1" = 1'-0"

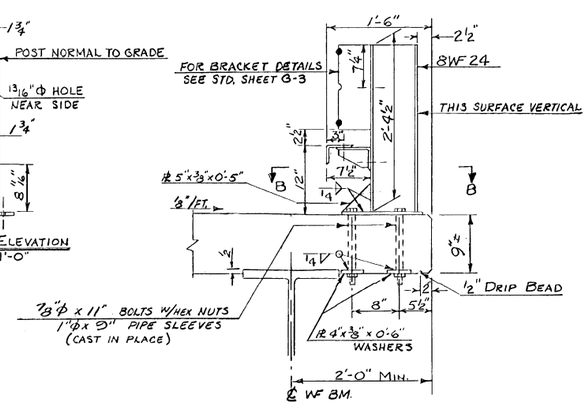

28 POST ASSEMBLIES & 28 CLIP ANGLES

SIDE ELEVATION OF POSTS
SCALE: 1" = 1'-0"

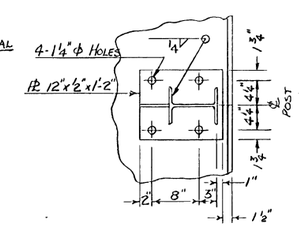

SECTION B-B
SCALE: 1" = 1'-0"

ITEM No.	ITEM	UNIT	TOTAL
404-B	STEEL SUPERSTRUCTURE	L.S.	1

RECOMMENDED FOR APPROVAL	BRIDGE ENGINEER	DATE 7/25/66
RECOMMENDED FOR APPROVAL	DISTRICT ENGINEER	DATE 7/29/66
RECOMMENDED FOR APPROVAL	ASSISTANT CHIEF ENGINEER	DATE 8/3/66
APPROVED BY	CHIEF ENGINEER	DATE 8/4/66

STATE OF VERMONT
DEPARTMENT OF HIGHWAYS

TOWN OF CASTLETON
ROUTE NO. VT 30 LOG STA. 66+17 (893)
VT RTE 30 OVER D&H R.R.
BRIDGE RAILING DETAILS
SCALE AS NOTED
IN CHARGE R.L. MERCHANT
DRAWN BY R. LADD CHECKED BY R. WATSON 7-66
PROJECT NO. BP-0161-6509
SHEET 1 OF 1

BR-8

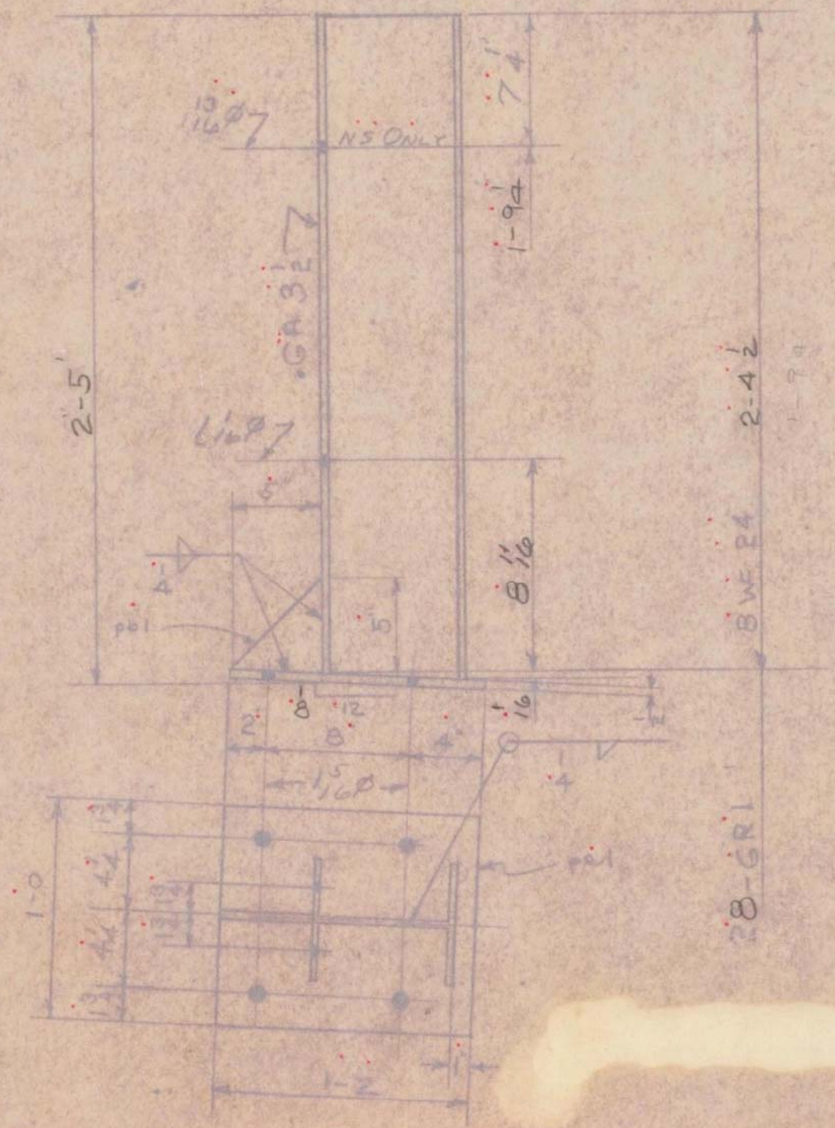

BILL OF MATERIAL

NO. PIECES	MARK	DESCRIPTION	LENGTH FT.	LENGTH IN.		WEIGHT	
	GR-1 ~ 28 GUARD RAIL POST						
28	GR1	8 WF 24	2	4 9/16	Res @ 50'-0	1603	
28	pa1	PL 12 x 1/2	1	2	Res @ 20'-0"	679	
28	pb1	BAR 5 x 3/8	0	5	Res 45 x 3/8 x 15'-0	74	
							2356

VERMONT STRUCTURAL STEEL CORPORATION
BURLINGTON, VERMONT

PROJ SP-0161-6509

		DATE
DRAWN BY	RLM	9-6-66
C'K'D BY	LC	9-12-66

HOLES: As Noted
BOLTS:
PAINT: R.L. (VT SPEC.)

PROJECT: VT RTE 30 OVER D&H.R.R
LOCATION: CASTLETON VERMONT
CUSTOMER:
ARCHITECT: STATE OF VERMONT DEPT OF HIGHWAYS
JOB NO. 92371
SHEET NO. 1

PRINT RECORD

NO.	FOR	DATE
3	App	9-12
4	SHOP	9-20-66

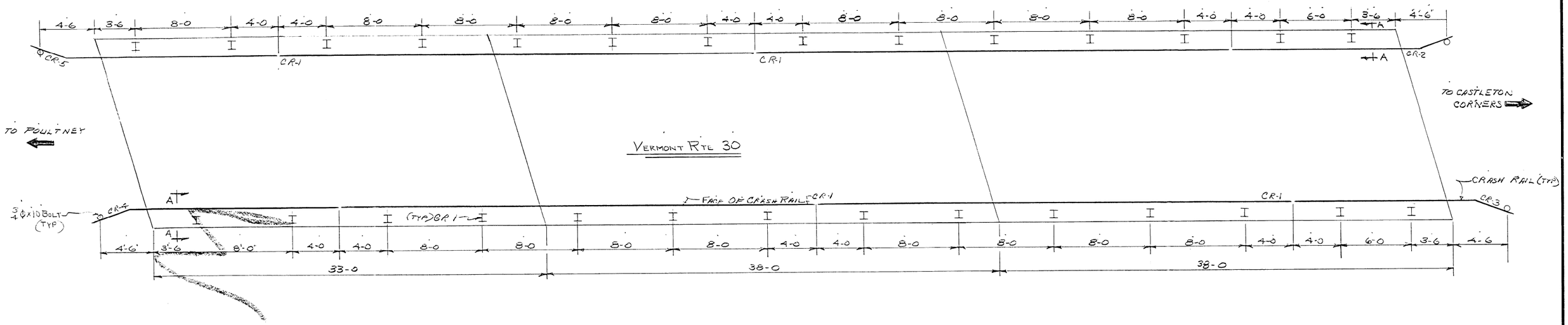

PLAN

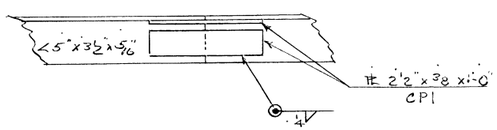

CRASH RAIL SPLICE DETAIL (TYP EACH LEG)

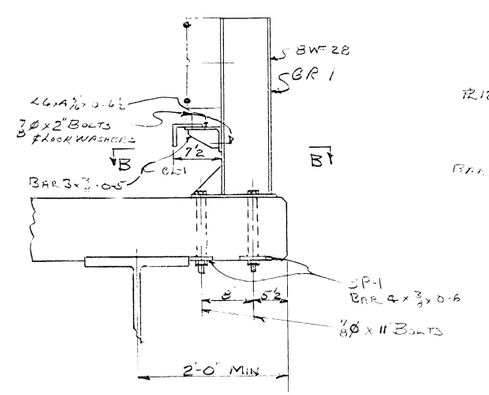

SECTION A-A

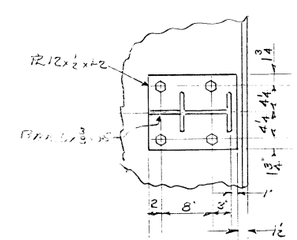

SECTION B-B

VERMONT STRUCTURAL STEEL CORPORATION
BURLINGTON, VT.

PROJ SP 0161-6509

		DATE
DRAWN BY	RLM	9-7-66
CK'D BY	L.C.	9-12-66

HOLES
BOLTS
PAINT

PROJECT VERMONT RTE 30 OVER D&H.R.R.
LOCATION CASTLETON VERMONT
CUSTOMER
ARCHITECT STATE OF VERMONT DEPT OF HIGHWAYS
JOB NO. 92371 SHEET NO. E1

PRINT RECORD

NO.	FOR	DATE
3	Appr	9-12
1	Shop	9-26-66

5M 7-65 QCP

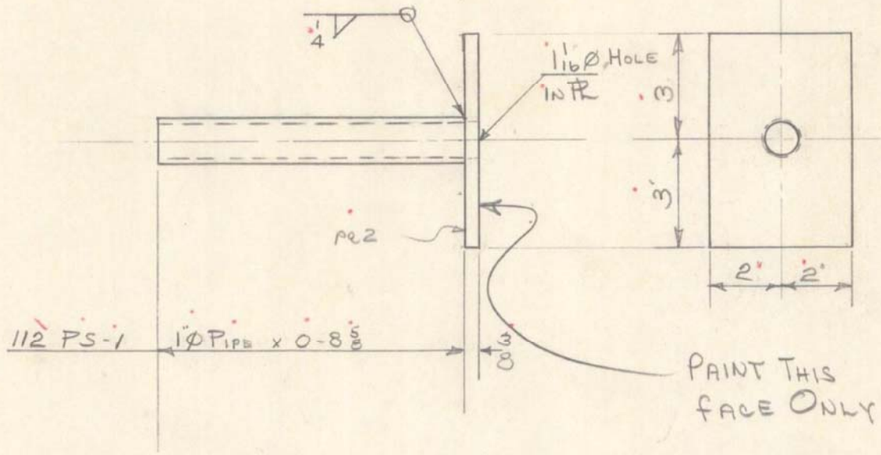

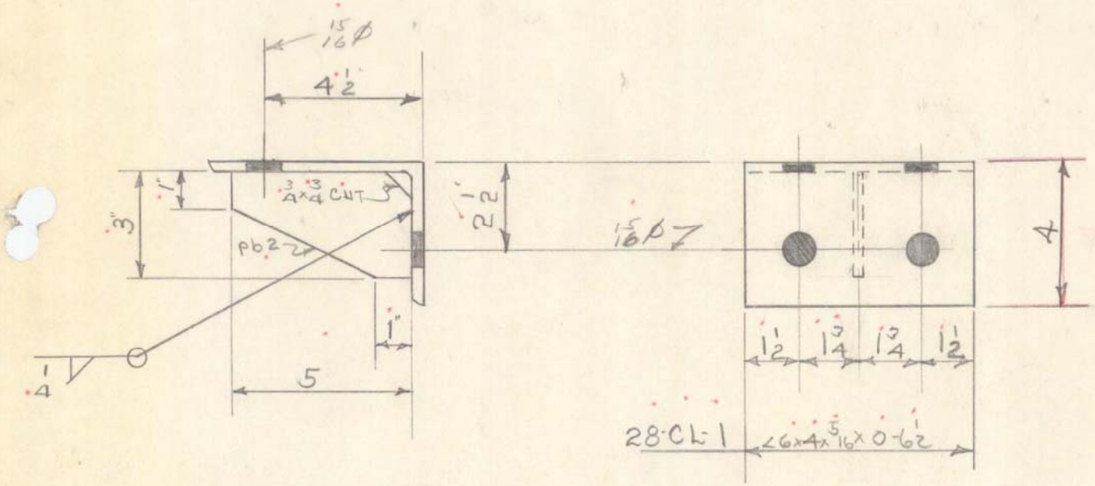

BILL OF MATERIAL

NO. PIECES	MARK	DESCRIPTION	LENGTH FT.	LENGTH IN.		WEIGHT	
112	PS1	1 Ø PIPE	0	8 5/8	STK	135	
112	PL2	BAR 4 x 3/8	0	6	RES 48 x 3/8 x 10-0	286	
28	CL-1	∠ 6 x 4 x 5/16	0	6 1/2	RES 1 @ 40-0	156	
28	PL2	BAR 3 x 3/8	0	5	RES 48 x 3/8 x 10-0	45	
							622

VERMONT STRUCTURAL STEEL CORPORATION
BURLINGTON, VERMONT

PROJ SP-0161-6509

		DATE
DRAWN BY	RLM	9-7-66
C'K'D BY	L.C.	9-12-66

HOLES AS NOTED
BOLTS
PAINT RL (VT SPEC)

PROJECT VT RTE 30 OVER D&H.R.R.
LOCATION CASTLETON VERMONT
CUSTOMER
ARCHITECT STATE OF VERMONT DEPT OF HIGHWAYS
JOB NO. 92371 SHEET NO. 2

PRINT RECORD

NO.	FOR	DATE
3	App	9-12
4	Shop	9-20-66

10M 7-65 QCP

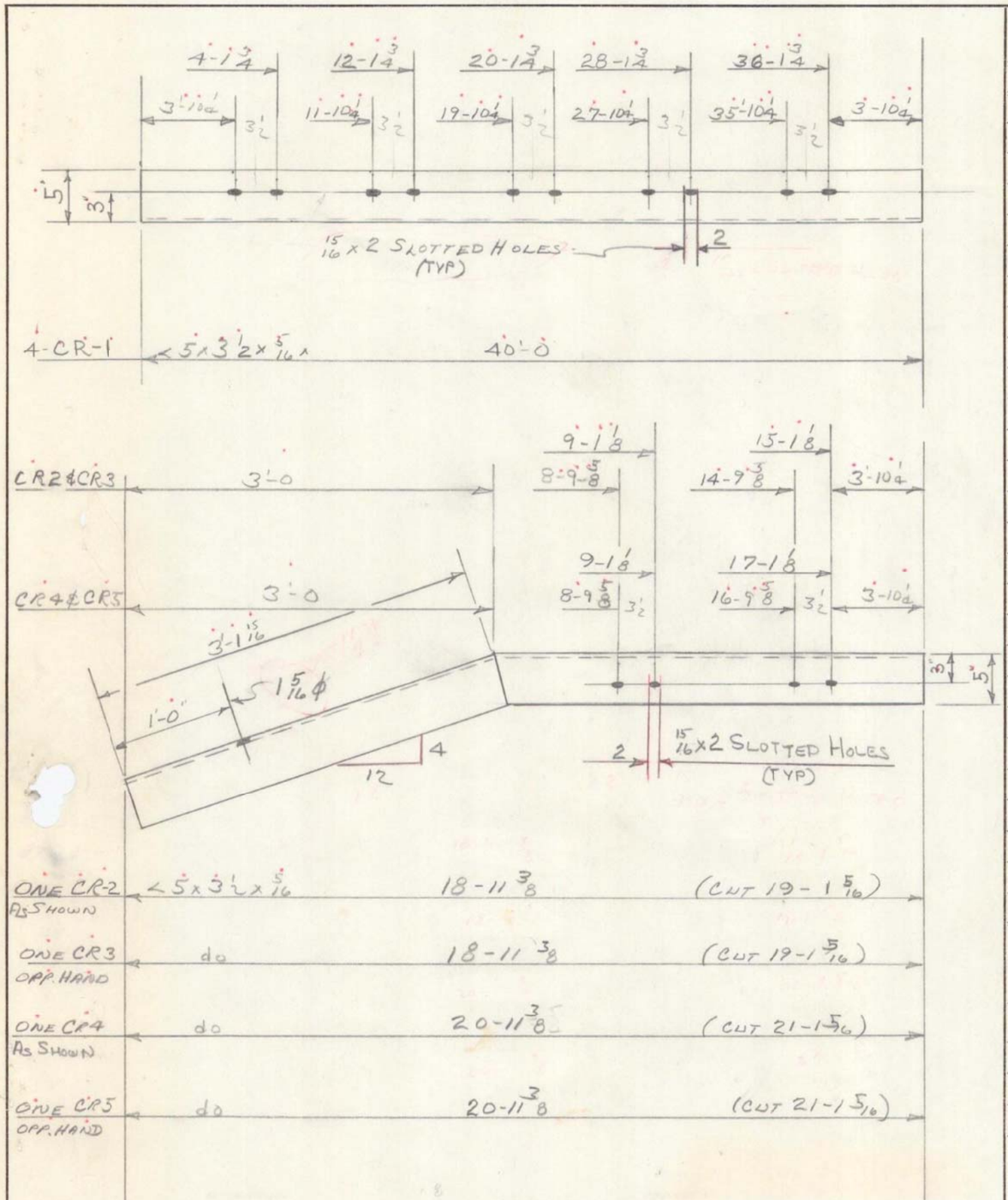

BILL OF MATERIAL

NO. PIECES	MARK	DESCRIPTION	LENGTH FT.	LENGTH IN.		WEIGHT
4	CR1	∠5 x 3 1/2 x 5/16	40	0	RES 4 @ 40'-0	
1	CR2	do	19	1 5/16	RES 4 @ 24'-0	
1	CR3	do	19	1 5/16		
1	CR4	do	21	1 5/16		
1	CR4	do	21	1 5/16		2092
		PLAIN MATERIAL				
12	CP1	BAR 2 1/2 x 3/8	1	0	RES 48 x 3/8 x 10'-0	38
		FIELD MATERIAL				244
112		7/8 ϕ BOLT W/ HEX NUTS	0	11		78
112		7/8 ϕ BOLT	0	2		8
4		7/8 ϕ BOLT	0	10		8
112		7/8 ϕ LOCK WASHER				1
4		7/8 ϕ PLAIN WASHERS				
						2469

VERMONT STRUCTURAL STEEL CORPORATION
BURLINGTON, VERMONT

PROJ SP-0161-6509

		DATE
DRAWN BY	RLM	9-7-66
C'K'D BY	LC.	9-12-66

HOLES: AS NOTED
BOLTS:
PAINT: RL. (VT SPEC.)

PROJECT: VT RTE 30 OVER DEHRR.
LOCATION: CASTLETON VERMONT
CUSTOMER:
ARCHITECT: STATE OF VERMONT DEPT OF HIGHWAYS
JOB NO. 92371
SHEET NO. 3

PRINT RECORD

NO.	FOR	DATE
3	App	9-18
4①	Shop	9-20-66

10M 7-65 QCP