Vermont Agency of Transportation
2015-05-11_Castleton BRF 0152(10) RR.pdf
RECEIVED
ON: May 6, 2015
and Checked for
CONFORMANCE
BY: Jennifer Fitch DATE: 05/12/2015

## ABUTMENT, WING WALL & APPROACH SLABS GENERAL NOTES

1. MIN. CONCRETE STRENGTH AT 28 DAYS SHALL BE
   ABUTMENT & WING WALLS = 5,000 PSI.
   APPROACH SLABS = 4,000 PSI.
2. MIN. CONCRETE STRENGTH FOR HANDLING OF WING WALLS AND APPROACH SLABS SHALL BE 3,500 PSI (UNLESS NOTED OTHERWISE).
3. MIN. CONCRETE STRENGTH FOR HANDLING OF ABUTMENTS SHALL BE 5,000 PSI.
4. ALL REINFORCING STEEL SHALL BE GR–60, ASTM A–615 (AASHTO M31) LEVEL II ~~(DUAL~~ COATED).
5. THE TOP OF ABUTMENTS SHALL RECEIVE A RAKE FINISH ROUGHENED TO 1/4" AMPLITUDE (UNLESS NOTED OTHERWISE).
6. THE TOP OF WING WALLS AND APPROACH SLABS SHALL RECEIVE A SMOOTH SCREED FINISH (UNLESS NOTED OTHERWISE).
7. SHEAR KEY SURFACES SHALL BE SAND BLASTED CLEAN.
8. PRECAST CONCRETE UNITS SHALL BE HANDLED AND ERECTED USING THE LIFTING INSERTS ONLY. THE MINIMUM SLING ANGLE FROM THE HORIZONTAL SHALL BE 60°. NON–PRESTRESSED UNITS SHALL BE STORED & TRANSPORTED WITH TIMBER SUPPORTS AT 5TH POINTS, UNLESS APPROVED BY J.P. CARRARA & SONS, INC.
9. MATERIAL SPECIFICATION AND MIX DESIGN SHALL CONFORM TO VERMONT SPEC. P510.02 AND P510.05 RESPECTIVELY.

   DESIGN MIX:
   WING WALLS: J.P.C. BRIDGE MIX #445MSCC
   APPROACH SLABS: J.P.C. BRIDGE MIX #445MSCC
   ABUTMENTS: J.P.C. BRIDGE MIX #425M–NO DCI
10. QUALITY CONTROL PROCEDURES ARE IN ACCORDANCE WITH PCI REQUIREMENTS. J.P. CARRARA & SONS, INC. IS A PCI CERTIFIED PLANT.
11. CURING METHOD: AS SOON AS THE TOP OF PRECAST CONCRETE UNITS ARE FINISHED, A COVER OF RIGID INSULATION AND POLY WILL BE PLACED OVER THE UNIT. NATURAL CURE WITH NO EXTERNAL HEAT APPLIED.
12. ABUTMENT POST–TENSIONING SEQUENCE:
   A. ERECT PRECAST CONCRETE ABUTMENTS AND INSTALL TRANSVERSE STRANDS.
   B. APPLY EPOXY BONDING COMPOUND TO MATCH CAST FACES OF VERTICAL CONSTRUCTION JOINTS.
   C. TENSION STRANDS TO 3 KIPS.
   D. CHECK ALIGNMENT OF PILE CAP ELEMENTS.
   E. POST–TENSION STRANDS TO 32 KIPS.

Revision 1 5.6.15

Revision 1 5.6.15

## NEXT BEAM GENERAL NOTES

1. MIN. CONCRETE STRENGTH AT 28 DAYS SHALL BE 10,000 PSI.
2. MIN. CONCRETE STRENGTH AT STRESS TRANSFER SHALL BE 7,500 PSI.
3. REINFORCING STEEL SHALL BE GR–60, ASTM A–615 (AASHTO M31) LEVEL II (DUAL COATED).
4. PRESTRESSING STRANDS SHALL CONFORM TO ASTM A–416 (AASHTO M203) AND SHALL CONSIST OF 0.60"ø x 270 KSI 7–WIRE LOW RELAXATION STRANDS.
5. PRESTRESSING STRANDS SHALL EACH BE PULLED TO HAVE A NET TENSION OF 44.0 K AFTER ACCOUNTING FOR CHUCK SLIPPAGE. TENSION SHALL BE VERIFIED BY MEASURING STRAND ELONGATION. (SEE EXAMPLE ELONGATION CALCULATION AND TENSIONING PROCEDURE, THIS SHEET.)
6. ENDS OF PRESTRESSING STRANDS SHALL BE CUT FLUSH WITH END OF NEXT BEAM STEMS (UNLESS NOTED OTHERWISE).
7. ALL EXPOSED CORNERS SHALL BE CHAMFERED 3/4".
8. THE TOP OF BEAMS SHALL RECEIVE A SMOOTH SCREED FINISH (UNLESS NOTED OTHERWISE).
9. SHEAR KEY SURFACES SHALL BE ROUGHENED TO 1/8" AMPLITUDE.
10. BEAMS SHALL BE HANDLED AND ERECTED USING THE LIFTING LOOPS ONLY. RIGGING SHALL BE CONFIGURED SUCH THAT EQUAL AND VERTICAL FORCES ARE APPLIED TO EACH OF THE TWO LIFTING LOOPS AT EACH END OF THE BEAM. THE PINS OF THE SHACKLES SHALL BE PLACED THROUGH THE LIFTING LOOPS. SEE DETAIL, THIS SHEET. BEAMS SHALL BE STORED AND TRANSPORTED WITH TIMBER SUPPORTS, TIMBER SUPPORTS SHALL BE PLACED WITHIN CLOSE PROXIMITY TO THE SHIPPING SLEEVE LOCATION AS SHOWN BELOW, UNLESS APPROVED BY J.P. CARRARA & SONS, INC.
11. MATERIAL SPECIFICATION AND MIX DESIGN SHALL CONFORM TO VERMONT SPEC. P510.02 AND P510.05 RESPECTIVELY.

   DESIGN MIX: J.P.C. BRIDGE MIX #430M W/5 GAL CORROSION INHIBITOR.
12. QUALITY CONTROL PROCEDURES ARE IN ACCORDANCE WITH PCI REQUIREMENTS. J.P. CARRARA & SONS, INC. IS A PCI CERTIFIED PLANT.
13. CURING METHOD: AS SOON AS THE TOP OF BEAM IS FINISHED, A COVER OF INSULATED POLY. THE DESIRED CURING TEMPERATURE RANGE SHALL NOT DROP BELOW 50°F. THE TEMPERATURE SHALL BE RECORDED BY AUTOMATIC SENSOR INSTRUMENTS ON GRAPH CHARTS, SPACED NOT MORE THAN 100' APART AND WILL CONTINUE UNTIL RELEASE STRENGTH IS ACHIEVED. EACH CHART SHALL BE MARKED WITH THE CASTING DATED AND LOCATION OF THE RECORDER. IF NECESSARY TO MAINTAIN CASTING BED TEMPERATURE PRIOR TO CONCRETE PLACEMENT OR TO ACCELERATE EARLY AGE STRENGTH GAIN, EXTERNAL RADIANT HEAT MAY BE EMPLOYED VIA HOT WATER DUCTS BENEATH AND WITHIN THE PERIPHERY OF THE CASTING BED. MAXIMUM CURING TEMPERATURE SHALL NOT EXCEED PCI SPECIFIED LIMITS.
14. OWNER SHALL PROVIDE APPROPRIATE WATERPROOFING TO GROUTED AND/OR EPOXIED SHEAR KEYS. J.P. CARRARA & SONS, INC. SHALL NOT BE HELD LIABLE FOR PROBLEMS ASSOCIATED WITH MOISTURE INFILTRATING GROUTED AND/OR EPOXIED SHEAR KEYS.

## DRAWING INDEX

| SHT. # | DRAWING TITLE | REV. # | REV. DATE |
|---|---|---|---|
| C1 | COVER SHEET | 1 | 5.6.15 |
| | | | |
| F1 | PRECAST ABUTMENT LAYOUT | 1 | 5.6.15 |
| F2 | ABUTMENT #1 ELEVATIONS | | |
| F3 | ABUTMENT #2 ELEVATIONS | | |
| F4 | PRESTRESSED NEXT BEAM & APPROACH SLAB LAYOUT | 1 | 5.6.15 |
| F5 | TRANSVERSE SECTION & DETAILS | 1 | 5.6.15 |
| | | | |
| NB1 | PRESTRESSED NEXT BEAM DETAILS | 1 | 5.6.15 |
| NB2 | PRESTRESSED NEXT BEAM DETAILS "CT–NB1" | 1 | 5.6.15 |
| NB2.1 | PRESTRESSED NEXT BEAM DETAILS "CT–NB1" | 1 | 5.6.15 |
| NB3 | PRESTRESSED NEXT BEAM DETAILS "CT–NB2" | 1 | 5.6.15 |
| NB3.1 | PRESTRESSED NEXT BEAM DETAILS "CT–NB2" | 1 | 5.6.15 |
| NB3.2 | PRESTRESSED NEXT BEAM DETAILS "CT–NB2" | 1 | 5.6.15 |
| NB4 | PRESTRESSED NEXT BEAM DETAILS "CT–NB3" | | |
| NB4.1 | PRESTRESSED NEXT BEAM DETAILS "CT–NB3" | 1 | 5.6.15 |
| NB4.2 | PRESTRESSED NEXT BEAM DETAILS "CT–NB3" | | 5.6.15 |
| | | | |
| AS1 | PRECAST APPROACH SLAB DETAILS "CT–AS1" | 1 | 5.6.15 |
| AS2 | PRECAST APPROACH SLAB DETAILS "CT–AS2" | | |
| AS3 | PRECAST APPROACH SLAB DETAILS "CT–AS3" | 1 | 5.6.15 |
| AS4 | PRECAST APPROACH SLAB DETAILS "CT–AS4" | | |
| AS5 | PRECAST APPROACH SLAB DETAILS "CT–AS5" | 1 | 5.6.15 |
| | | | |
| AB1 | PRECAST ABUTMENT PLAN, SECTION & DETAILS | | |
| AB2 | PRECAST ABUTMENT DETAILS "CT–AB2" | 1 | 5.6.15 |
| AB3 | PRECAST ABUTMENT DETAILS "CT–AB1" | 1 | 5.6.15 |
| AB3.1 | PRECAST ABUTMENT DETAILS "CT–AB1" & "CT–AB4" | | |
| AB4 | PRECAST ABUTMENT DETAILS "CT–AB3" | 1 | 5.6.15 |
| AB5 | PRECAST ABUTMENT DETAILS "CT–AB4" | | |
| | | | |
| WW1 | PRECAST WINGWALL DETAILS "CT–WW1" | 1 | 5.6.15 |
| WW2 | PRECAST WINGWALL DETAILS "CT–WW2" | 1 | 5.6.15 |
| WW3 | PRECAST WINGWALL DETAILS "CT–WW3" | | |
| WW4 | PRECAST WINGWALL DETAILS "CT–WW4" | | |
| | | | |
| M1 | MATERIALS LIST (NEXT BEAMS) | 1 | 5.6.15 |
| M2 | MATERIALS LIST (ABUTMENTS, WINGWALLS & APPROACH SLABS) | 1 | 5.6.15 |
| | | | |
| | | | |

DESIGN LIVE LOAD: HL–93

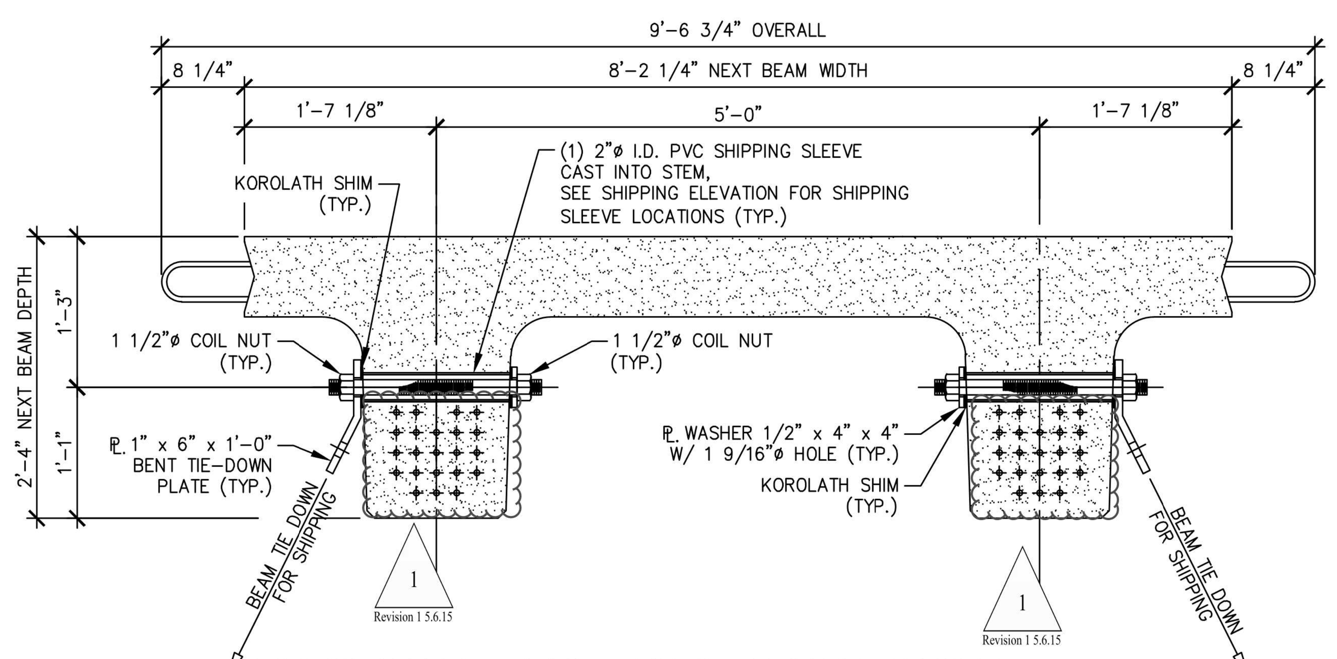


NEXT BEAM 28D HOLD–DOWN DETAIL FOR SHIPPING
3/4" = 1'–0"

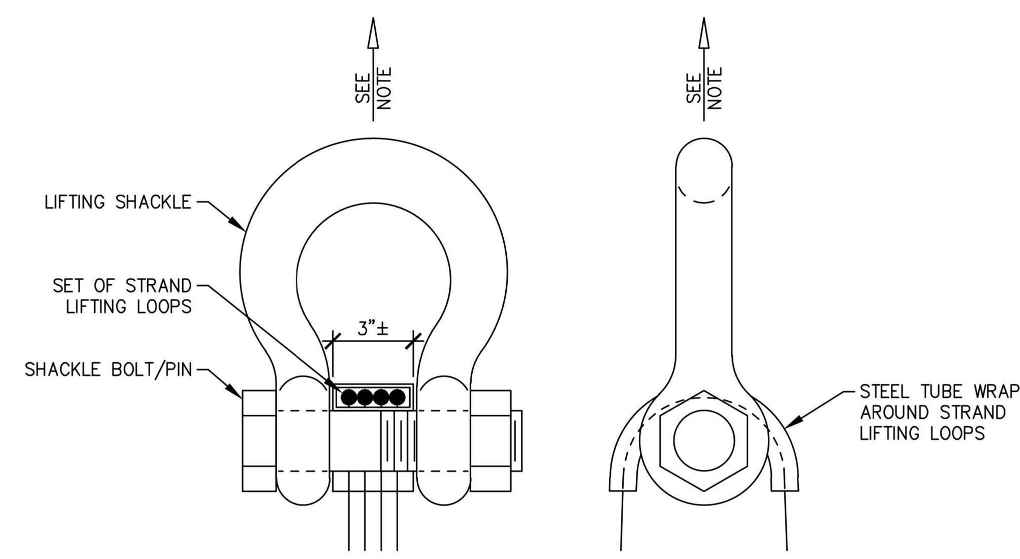


NOTE: BEAMS SHALL BE HANDLED AND ERECTED USING THE LIFTING LOOPS ONLY. RIGGING SHALL BE CONFIGURED SUCH THAT EQUAL AND VERTICAL FORCES ARE APPLIED TO EACH SET OF LIFTING LOOPS AT EACH END OF THE BEAM. SHACKLE BOLT/PIN SHALL BE PLACED UNDER LIFT LOOPS AS SHOWN. DESIGN AND CONFIGURATION OF RIGGING BY PURCHASER.

LIFTING SHACKLE DETAILS
N.T.S.

## EXAMPLE PRESTRESSING STRAND ELONGATION CALC. AND TENSIONING

(NOT TO BE USED FOR CONSTRUCTION)

SIZE & GRADE: 0.60"ø x 270 KSI
AREA: 0.217 IN^2
TENSION: 44,000 LB. EACH STRAND
GRIP–TO–GRIP: 252'–0" = 252.00'
Es = 28,500,000 PSI (ASSUMED FOR THESE CALCULATIONS; VALUE TO BE OBTAINED FOR STRAND SPOOL ACTUALLY USED)

EXAMPLE:

$$\Delta = \frac{PL}{AE} = \frac{(44{,}000 - 3{,}000) \times 252.00 \times 12}{0.217 \times 28{,}500{,}000} = 20.047"$$

THEREFORE: (TOLERANCES ± 5%)
$\Delta$ UPPER LIMIT = 1.05 x 20.047" = 21.05" = 21"
$\Delta$ LOWER LIMIT = 0.95 x 20.047" = 19.04" = 19"

EXTRA FORCE REQUIRED TO COMPENSATE FOR 1/2" CHUCK SLIPPAGE:

$$\Delta P = \frac{0.5 \times 41{,}000}{20.047} = 1{,}023 \text{ LBS.}$$

TOTAL TENSIONING FORCE = 44,000 + 1,023 = 45,023 LBS.

ADDITIONALLY, INCREASED ELONGATION AND THE CORRESPONDING FORCE DUE TO FORM SHORTENING SHALL BE ACCOUNTED FOR IN THE CALCULATIONS USED FOR CONSTRUCTION PER PROVISION PCI MNL 116 5.3.11.3.

## STRAND TENSIONING PROCEDURE:

1. PULL EACH STRAND INITIALLY TO 3,000* LBS. AND MARK STRAND.
2. THEN PULL EACH STRAND TO A TOTAL TENSION OF 45,023* LBS. AND MEASURE ELONGATION AFTER SEATING. IT MUST BE BETWEEN 19"* AND 21"*.

   * NOTE: FORCES READ ON STRESSING JACK GAUGES MUST BE MADE TO CORRESPOND TO ABOVE VALUES BASED ON CALIBRATION DATA FOR SPECIFIC JACK USED.
3. STRANDS IN BOTTOM TWO ROWS SHALL BE RE–PULLED TO VERIFY SHORTENING EFFECT OF SELF STRESSING BED. RE–PULL FORCE SHALL NOT INCLUDE OVER–PULL FOR SHORTENING.

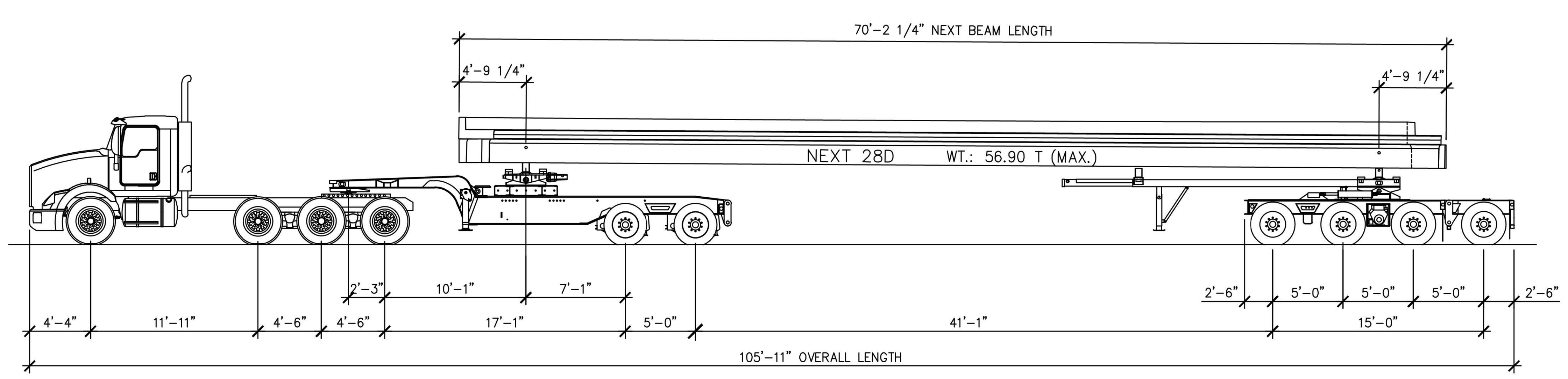


SHIPPING ELEVATION
N.T.S.

Revision 1 5.6.15

RESUBMITTED (2)
5-8-15, 2015
J. P. CARRARA & SONS, INC.
MIDDLEBURY, VT 05753

SHOP DRAWING REVIEW
☒ REVIEWED AS REQUIRED BY THE CONSTRUCTION CONTRACT DOCUMENTS AND APPROVED, BUT ONLY FOR CONFORMANCE TO THE DESIGN CONCEPT OF THE WORK, AND SUBJECT TO FURTHER LIMITATIONS AND REQUIREMENTS CONTAINED IN THE CONSTRUCTION CONTRACT DOCUMENTS.
☐ REJECTED ☐ REVISE AND RESUBMIT ☐ FURNISH AS CORRECTED
CORRECTIONS OR COMMENTS MADE ON THE SHOP DRAWINGS DURING THIS REVIEW DO NOT RELIEVE CONTRACTOR FROM COMPLIANCE WITH REQUIRMENTS OF THE DRAWINGS AND SPECIFICATIONS. THIS CHECK IS ONLY FOR REVIEW OF GENERAL CONFORMANCE WITH THE DESIGN CONCEPT OF THE PROJECT AND GENERAL COMPLIANCE WITH THE INFORMATION GIVEN IN THE CONTRACT DOCUMENTS. THE CONTRACTOR IS RESPONSIBLE FOR: CONFIRMING AND CORRELATING ALL QUANTITIES AND DIMENSIONS; SELECTING FABRICATION PROCESSES AND TECHNIQUES OF CONSTRUCTION; COORDINATING HIS WORK WITH THAT OF ALL OTHER TRADES; AND PERFORMING HIS WORK IN A SAFE AND SATISFACTORY MANNER.
vhb 40 IDX Drive, Building 100, Suite 200, South Burlington, VT 05403, 802.497.6100
Job Number: 57632.00
Reviewed By: E.F. LAWES
Date: May 11, 2015

| | |
|---|---|
| J.P. CARRARA & SONS INC.<br>Precast & Prestress Manufacturer<br>2464 CASE STR., MIDDLEBURY, VERMONT 05753 Phone:(802)388–6361 Fax:(802)388–9010 | SCHULTZ CONSTRUCTION<br>CONTRACTOR<br>BALLSTON SPA, NY |
| STATE OF VERMONT AGENCY OF TRANSPORTATION<br>COUNTY OF RUTLAND | DATE: MAY 06, 2015<br>SCALE: NOTED |
| TOWN OF CASTLETON<br>VT ROUTE 30 (RURAL MINOR ARTERIAL)<br>BRIDGE NO.: 93 PROJECT NO.: BRF 015–2(10) | CHKD: R.M. DFTM: PSS<br>JOB NO: 23456–015 |
| COVER SHEET | DWG. NO: C1 |

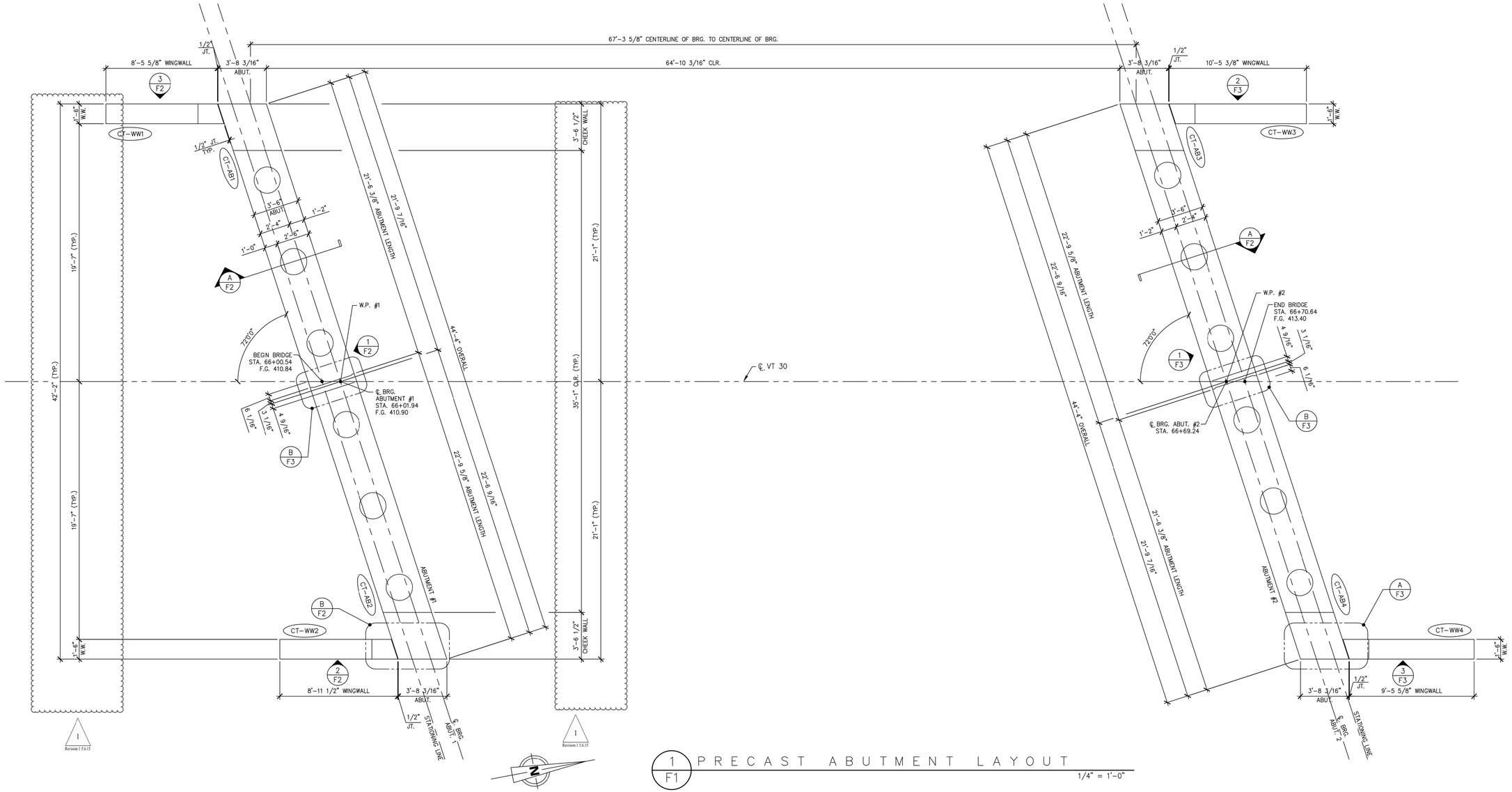


1 / F1 PRECAST ABUTMENT LAYOUT

1/4" = 1'-0"

Vermont Agency of Transportation

2015-05-11_Castleton BRF 015(2)(3) RR.pdf

RECEIVED

ON: May 6, 2015

and Checked for

CONFORMANCE

BY: Jennifer Fitch DATE: 05/12/2015

Revision 1 5.6.15

**SHOP DRAWING REVIEW**

☒ REVIEWED AS REQUIRED BY THE CONSTRUCTION CONTRACT DOCUMENTS AND APPROVED, BUT ONLY FOR CONFORMANCE TO THE DESIGN CONCEPT OF THE WORK, AND SUBJECT TO FURTHER LIMITATIONS AND REQUIREMENTS CONTAINED IN THE CONSTRUCTION CONTRACT DOCUMENTS.

☐ REJECTED ☐ REVISE AND RESUBMIT ☐ FURNISH AS CORRECTED

CORRECTIONS OR COMMENTS MADE ON THE SHOP DRAWINGS DURING THIS REVIEW DO NOT RELIEVE CONTRACTOR FROM COMPLIANCE WITH REQUIREMENTS OF THE DRAWINGS AND SPECIFICATIONS. THIS CHECK IS ONLY FOR REVIEW OF GENERAL CONFORMANCE WITH THE DESIGN CONCEPT OF THE PROJECT AND GENERAL COMPLIANCE WITH THE INFORMATION GIVEN IN THE CONTRACT DOCUMENTS. THE CONTRACTOR IS RESPONSIBLE FOR: CONFIRMING AND CORRELATING ALL QUANTITIES AND DIMENSIONS; SELECTING FABRICATION PROCESSES AND TECHNIQUES OF CONSTRUCTION; COORDINATING HIS WORK WITH THAT OF ALL OTHER TRADES; AND PERFORMING HIS WORK IN A SAFE AND SATISFACTORY MANNER.

vhb
40 IDX Drive
Building 100, Suite 200
South Burlington, VT 05403
802.497.6100

Job Number: 57632.00
Reviewed By: E.F. LAWES
Date: May 11, 2015

J.P. CARRARA & SONS INC.
Precast & Prestress Manufacturer
2464 CASE STR., MIDDLEBURY, VERMONT 05753 Phone:(802)388-6361 Fax:(802)388-9010

SCHULTZ CONSTRUCTION
CONTRACTOR
BALLSTON SPA, NY

STATE OF VERMONT AGENCY OF TRANSPORTATION
COUNTY OF RUTLAND

TOWN OF CASTLETON
VT ROUTE 30 (RURAL MINOR ARTERIAL)
BRIDGE NO.: 93 PROJECT NO.: BRF 015-2(10)

PRECAST ABUTMENT LAYOUT

| | |
|---|---|
| DATE: | MAY 06, 2015 |
| SCALE: | NOTED |
| CHKD: R.M. | DFTM: PSS |
| JOB NO: | 23456-015 |
| DWG. NO: | F1 |

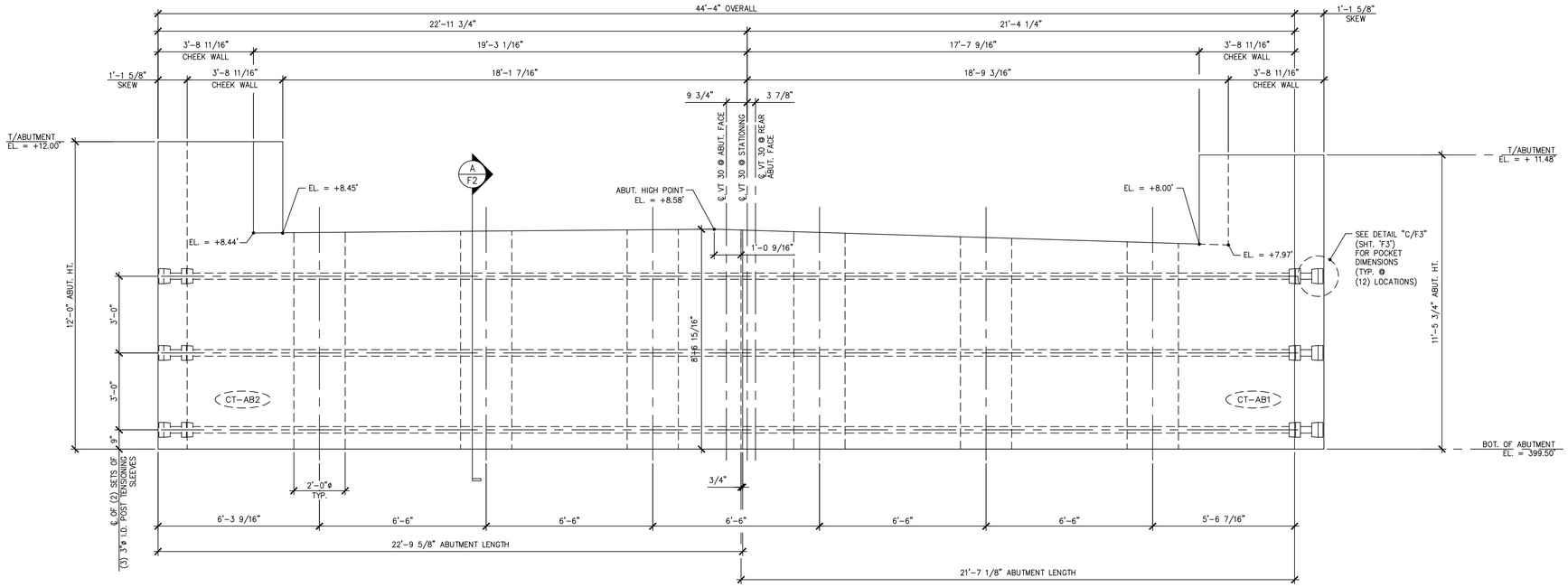


1 / F2 ABUTMENT #1 ELEVATION

3/8" = 1'-0"

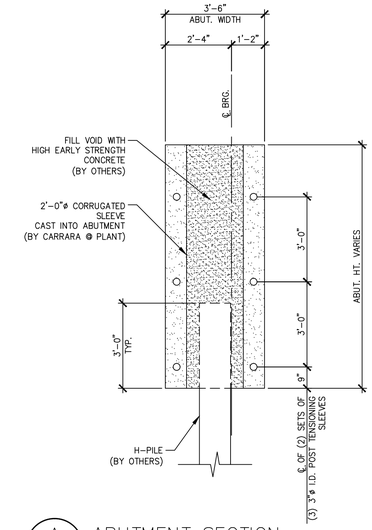


A / F2 ABUTMENT SECTION

3/8" = 1'-0"

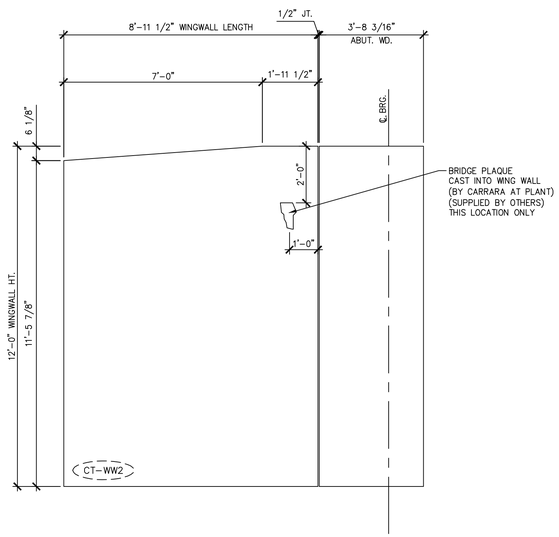


2 / F2 WINGWALL #2 ELEVATION

3/8" = 1'-0"

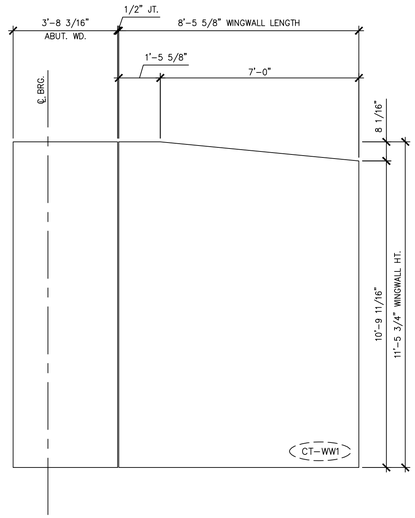


3 / F2 WINGWALL #1 ELEVATION

3/8" = 1'-0"

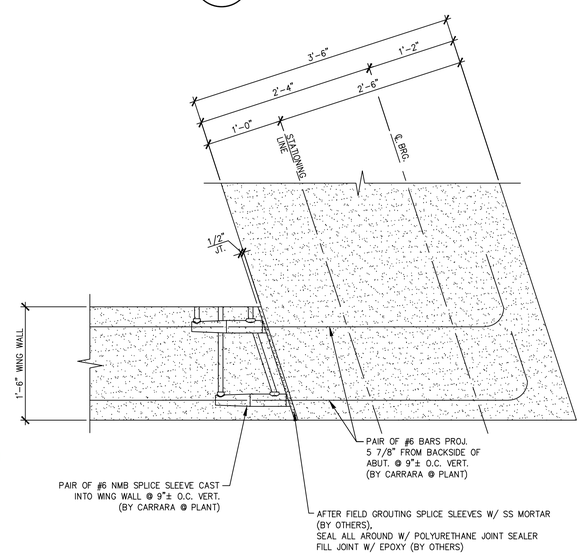


B / F2 WING WALL CONNECTION DETAIL

1" = 1'-0"

Vermont Agency of Transportation

2015-05-11_Cardinese BRF 015(10) 100.pdf

RECEIVED

ON: May 6, 2015

and Checked for

CONFORMANCE

BY: Jennifer Fitch DATE: 05/12/2015

**SHOP DRAWING REVIEW**

X REVIEWED AS REQUIRED BY THE CONSTRUCTION CONTRACT DOCUMENTS AND APPROVED, BUT ONLY FOR CONFORMANCE TO THE DESIGN CONCEPT OF THE WORK, AND SUBJECT TO FURTHER LIMITATIONS AND REQUIREMENTS CONTAINED IN THE CONSTRUCTION CONTRACT DOCUMENTS.

☐ REJECTED ☐ REVISE AND RESUBMIT ☐ FURNISH AS CORRECTED

CORRECTIONS OR COMMENTS MADE ON THE SHOP DRAWINGS DURING THIS REVIEW DO NOT RELIEVE CONTRACTOR FROM COMPLIANCE WITH REQUIRMENTS OF THE DRAWINGS AND SPECIFICATIONS. THIS CHECK IS ONLY FOR REVIEW OF GENERAL CONFORMANCE WITH THE DESIGN CONCEPT OF THE PROJECT AND GENERAL COMPLIANCE WITH THE INFORMATION GIVEN IN THE CONTRACT DOCUMENTS. THE CONTRACTOR IS RESPONSIBLE FOR: CONFIRMING AND CORRELATING ALL QUANTITIES AND DIMENSIONS; SELECTING FABRICATION PROCESSES AND TECHNIQUES OF CONSTRUCTION; COORDINATING HIS WORK WITH THAT OF ALL OTHER TRADES; AND PERFORMING HIS WORK IN A SAFE AND SATISFACTORY MANNER.

vhb
40 IDX Drive
Building 100, Suite 200
South Burlington, VT 05403
802.497.6100

Job Number: 57632.00
Reviewed By: E.F. LAWES
Date: May 11, 2015

J.P. CARRARA & SONS INC.
Precast & Prestress Manufacturer
2464 CASE STR., MIDDLEBURY, VERMONT 05753 Phone:(802)388-6361 Fax:(802)388-9010

SCHULTZ CONSTRUCTION
CONTRACTOR
BALLSTON SPA, NY

STATE OF VERMONT AGENCY OF TRANSPORTATION
COUNTY OF RUTLAND

TOWN OF CASTLETON
VT ROUTE 30 (RURAL MINOR ARTERIAL)
BRIDGE NO.: 93 PROJECT NO.: BRF 015-2(10)

ABUTMENT #1 ELEVATIONS

| | |
|---|---|
| DATE: | MAY 06, 2015 |
| SCALE: | NOTED |
| CHKD: R.M. | DFTM: PSS |
| JOB NO: | 23456-015 |
| DWG. NO: | F2 |

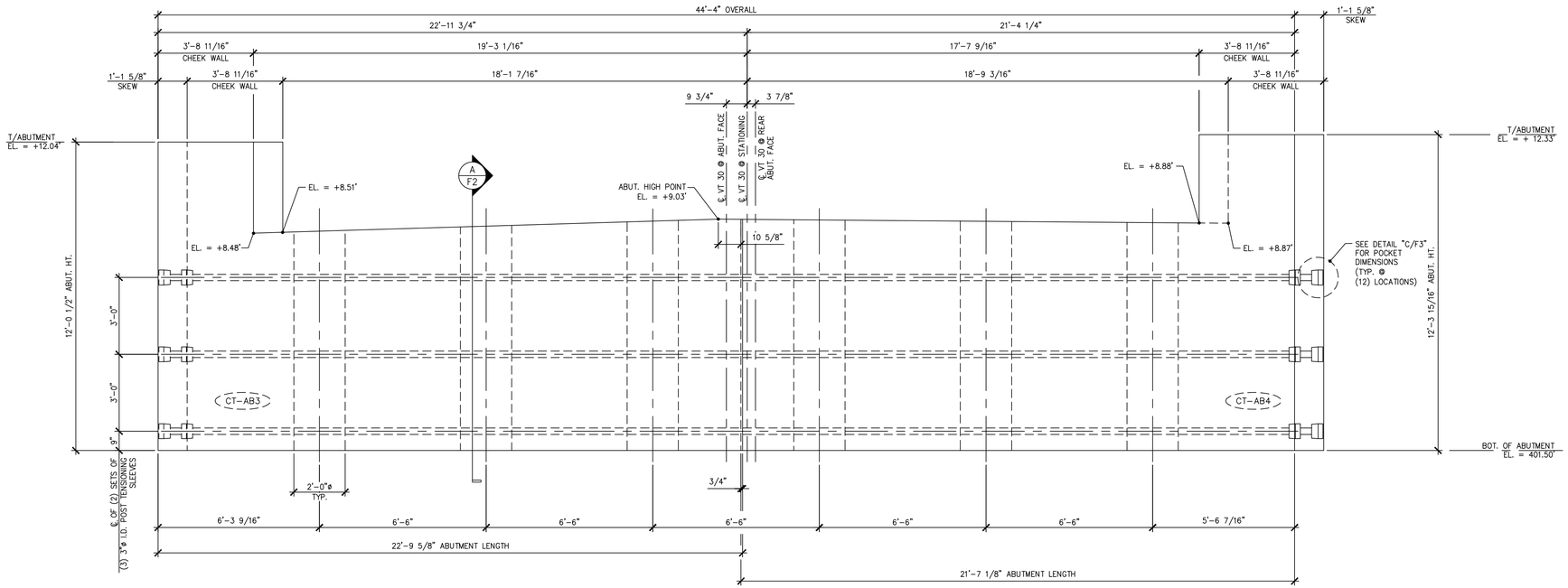


1 / F3 ABUTMENT #2 ELEVATION
3/8" = 1'-0"

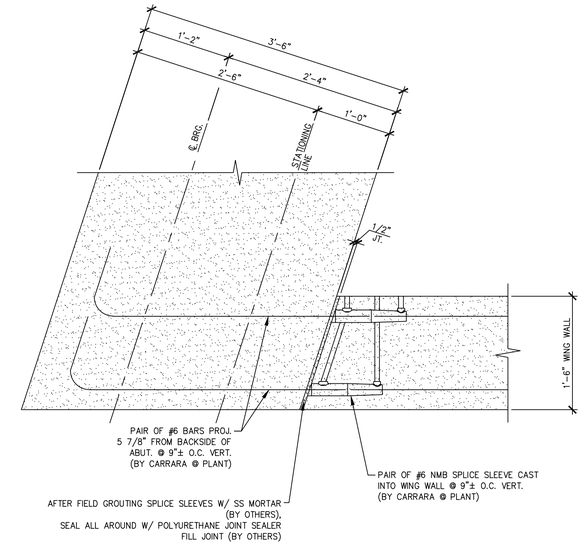


A / F3 WING WALL CONNECTION DETAIL
1" = 1'-0"

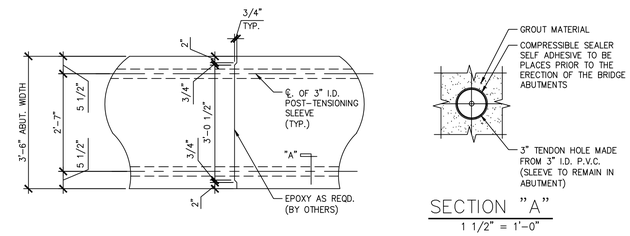


B / F3 MATCH CAST SECTION @ P.T. SLEEVE
1/2" = 1'-0"

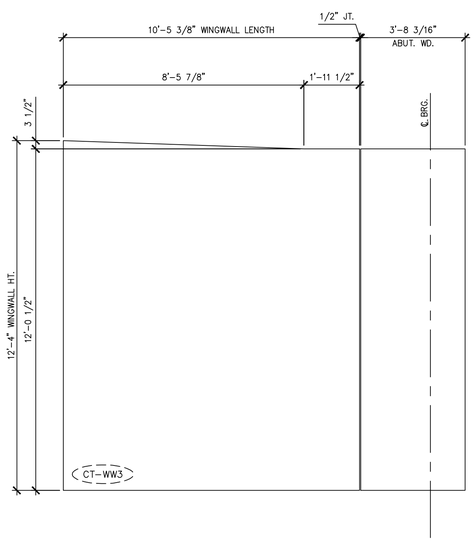


2 / F3 WINGWALL #3 ELEVATION
3/8" = 1'-0"

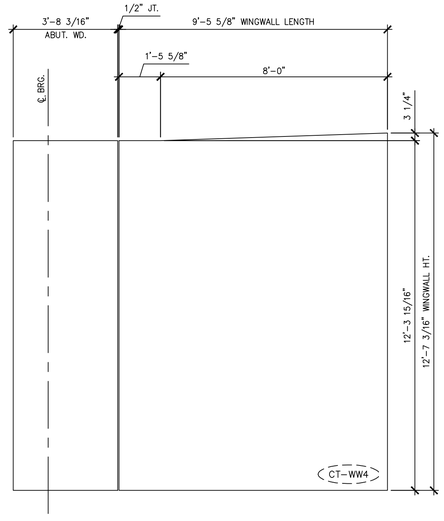


3 / F3 WINGWALL #4 ELEVATION
3/8" = 1'-0"

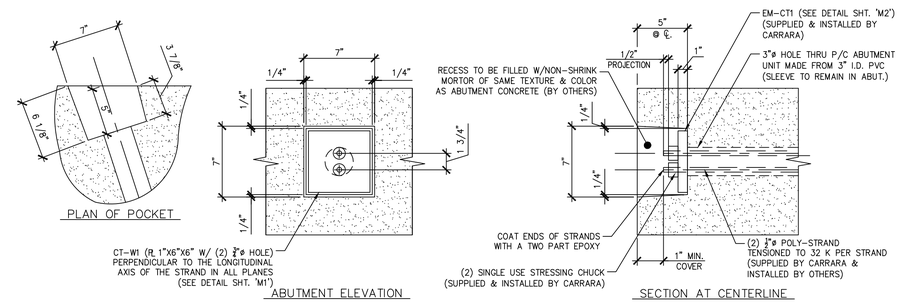


C / F3 POCKET DETAIL
1 1/2" = 1'-0"

**SHOP DRAWING REVIEW**

X REVIEWED AS REQUIRED BY THE CONSTRUCTION CONTRACT DOCUMENTS AND APPROVED, BUT ONLY FOR CONFORMANCE TO THE DESIGN CONCEPT OF THE WORK, AND SUBJECT TO FURTHER LIMITATIONS AND REQUIREMENTS CONTAINED IN THE CONSTRUCTION CONTRACT DOCUMENTS.

☐ REJECTED ☐ REVISE AND RESUBMIT ☐ FURNISH AS CORRECTED

CORRECTIONS OR COMMENTS MADE ON THE SHOP DRAWINGS DURING THIS REVIEW DO NOT RELIEVE CONTRACTOR FROM COMPLIANCE WITH REQUIRMENTS OF THE DRAWINGS AND SPECIFICATIONS. THIS CHECK IS ONLY FOR REVIEW OF GENERAL CONFORMANCE WITH THE DESIGN CONCEPT OF THE PROJECT AND GENERAL COMPLIANCE WITH THE INFORMATION GIVEN IN THE CONTRACT DOCUMENTS. THE CONTRACTOR IS RESPONSIBLE FOR: CONFIRMING AND CORRELATING ALL QUANTITIES AND DIMENSIONS; SELECTING FABRICATION PROCESSES AND TECHNIQUES OF CONSTRUCTION; COORDINATING HIS WORK WITH THAT OF ALL OTHER TRADES; AND PERFORMING HIS WORK IN A SAFE AND SATISFACTORY MANNER.

vhb
40 IDX Drive
Building 100, Suite 200
South Burlington, VT 05403
802.497.6100

Job Number: 57632.00
Reviewed By: E.F. LAWES
Date: May 11, 2015

Vermont Agency of Transportation
2015-05-12_Cambium BRF 015(10) MS.pdf
RECEIVED
ON: May 6, 2015
and Checked for
CONFORMANCE
BY: Jennifer Fitch DATE: 05/12/2015

J.P. CARRARA & SONS INC.
Precast & Prestress Manufacturer
2464 CASE STR., MIDDLEBURY, VERMONT 05753 Phone:(802)388-6361 Fax:(802)388-9010

SCHULTZ CONSTRUCTION
CONTRACTOR
BALLSTON SPA, NY

| | |
|---|---|
| STATE OF VERMONT AGENCY OF TRANSPORTATION<br>COUNTY OF RUTLAND | DATE: MAY 06, 2015<br>SCALE: NOTED |
| TOWN OF CASTLETON<br>VT ROUTE 30 (RURAL MINOR ARTERIAL)<br>BRIDGE NO.: 93 PROJECT NO.: BRF 015-2(10) | CHKD: R.M. DFTM: PSS<br>JOB NO: 23456-015 |
| ABUTMENT #2 ELEVATION | DWG. NO: F3 |

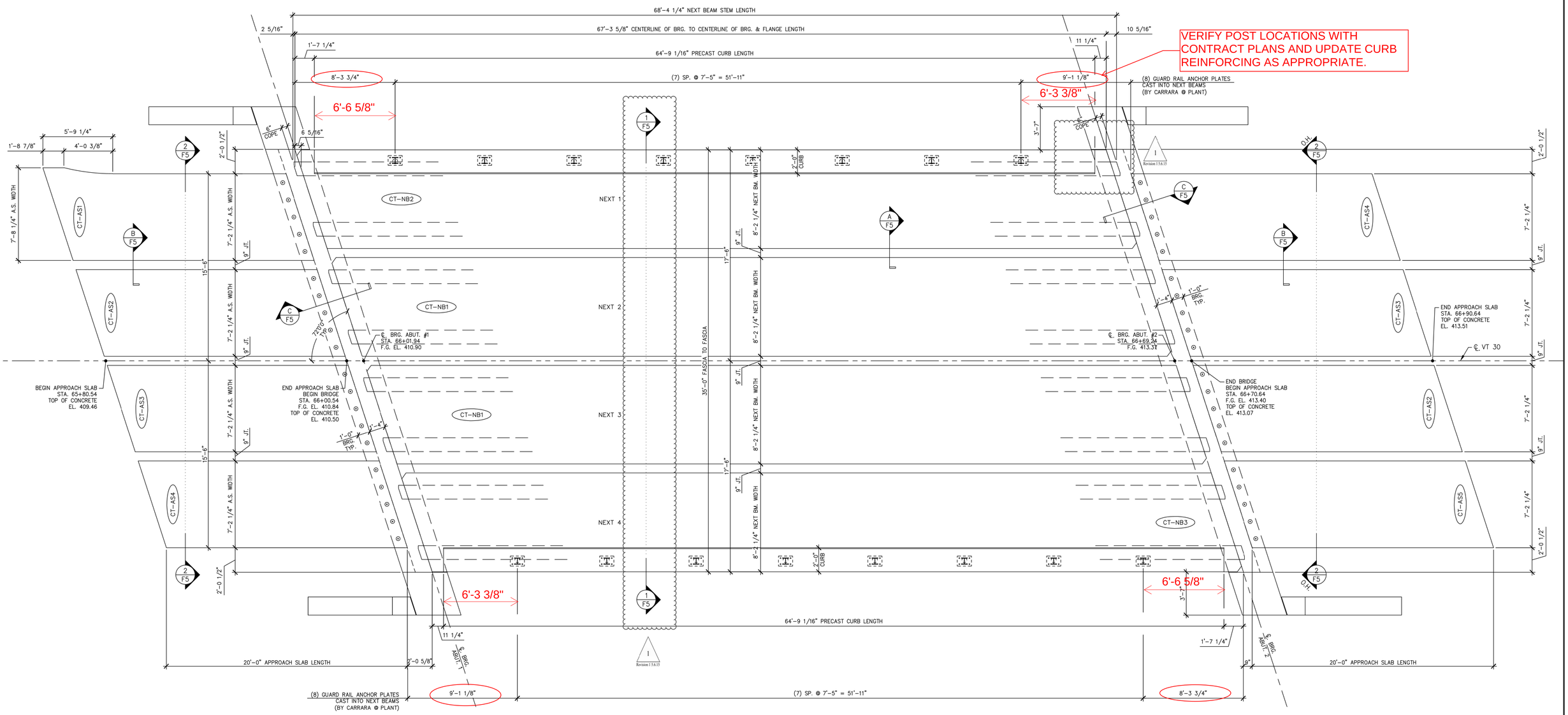


## 1 / F4 NEXT BEAM & APPROACH SLAB LAYOUT

1/4" = 1'-0"

Vermont Agency of Transportation

2015-06-12_Common BRF 015(10) RR.pdf

RECEIVED

ON: May 6, 2015

and Checked for

CONFORMANCE

BY: Jennifer Fitch DATE: 05/12/2015

**SHOP DRAWING REVIEW**

☐ REVIEWED AS REQUIRED BY THE CONSTRUCTION CONTRACT DOCUMENTS AND APPROVED, BUT ONLY FOR CONFORMANCE TO THE DESIGN CONCEPT OF THE WORK, AND SUBJECT TO FURTHER LIMITATIONS AND REQUIREMENTS CONTAINED IN THE CONSTRUCTION CONTRACT DOCUMENTS.

☐ REJECTED ☒ REVISE AND RESUBMIT ☐ FURNISH AS CORRECTED

CORRECTIONS OR COMMENTS MADE ON THE SHOP DRAWINGS DURING THIS REVIEW DO NOT RELIEVE CONTRACTOR FROM COMPLIANCE WITH REQUIRMENTS OF THE DRAWINGS AND SPECIFICATIONS. THIS CHECK IS ONLY FOR REVIEW OF GENERAL CONFORMANCE WITH THE DESIGN CONCEPT OF THE PROJECT AND GENERAL COMPLIANCE WITH THE INFORMATION GIVEN IN THE CONTRACT DOCUMENTS. THE CONTRACTOR IS RESPONSIBLE FOR: CONFIRMING AND CORRELATING ALL QUANTITIES AND DIMENSIONS; SELECTING FABRICATION PROCESSES AND TECHNIQUES OF CONSTRUCTION; COORDINATING HIS WORK WITH THAT OF ALL OTHER TRADES; AND PERFORMING HIS WORK IN A SAFE AND SATISFACTORY MANNER.

vhb 40 IDX Drive, Building 100, Suite 200, South Burlington, VT 05403, 802.497.6100

Job Number: 57632.00
Reviewed By: E.F. LAWES
Date: May 11, 2015

J.P. CARRARA & SONS INC.
Precast & Prestress Manufacturer
2464 CASE STR., MIDDLEBURY, VERMONT 05753 Phone:(802)388-6361 Fax:(802)388-9010

SCHULTZ CONSTRUCTION
CONTRACTOR
BALLSTON SPA, NY

STATE OF VERMONT AGENCY OF TRANSPORTATION
COUNTY OF RUTLAND

TOWN OF CASTLETON
VT ROUTE 30 (RURAL MINOR ARTERIAL)
BRIDGE NO.: 93 PROJECT NO.: BRF 015-2(10)

PRESTRESSED NEXT BEAM & APPROACH SLAB LAYOUT

| | |
|---|---|
| DATE: | MAY 06, 2015 |
| SCALE: | NOTED |
| CHKD: R.M. | DFTM: PSS |
| JOB NO: | 23456-015 |
| DWG. NO: | F4 |

Revision 1 5.6.15

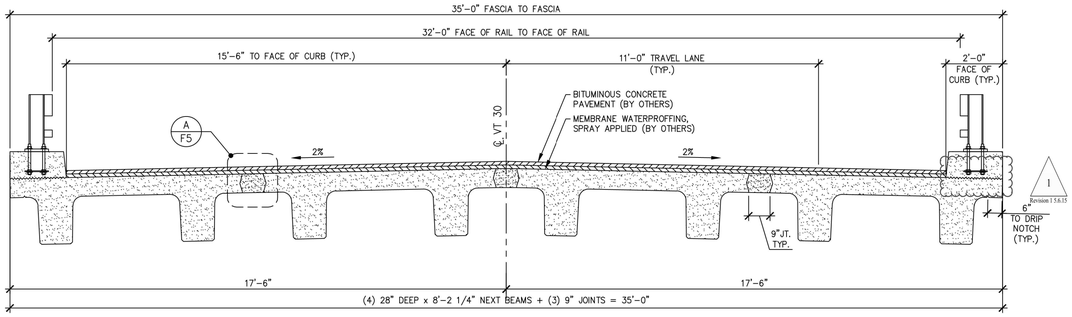


1 / F5 TRANSVERSE NEXT BEAM SECTION
3/8" = 1'-0"

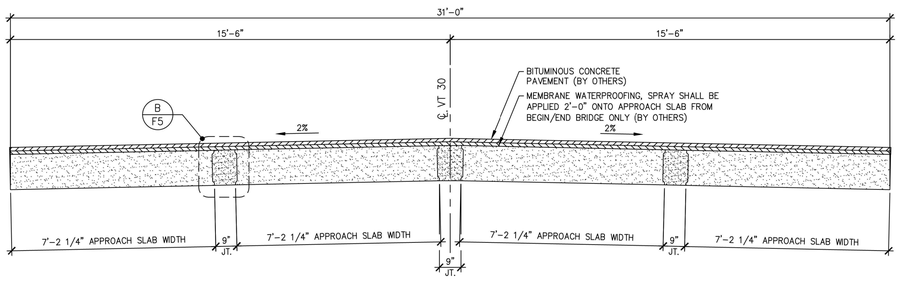


2 / F5 TRANSVERSE APPROACH SLAB SECTION
3/8" = 1'-0"

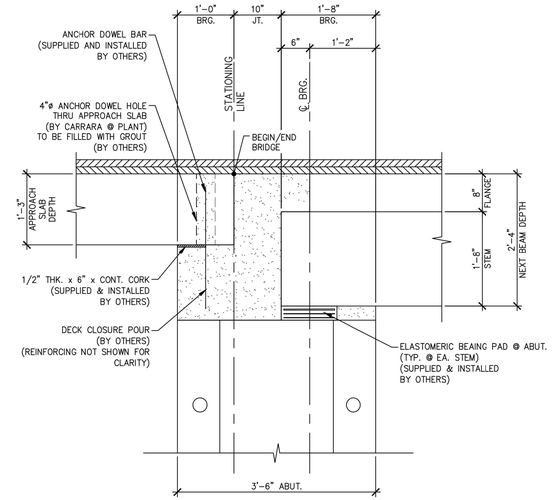


C / F5 BEARING SECTION
3/4" = 1'-0"

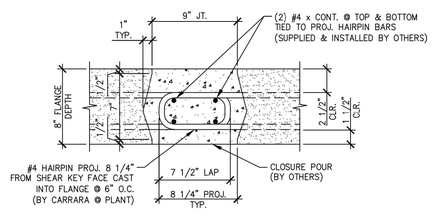


A / F5 NEXT BEAM CLOSURE POUR
1 1/2" = 1'-0"

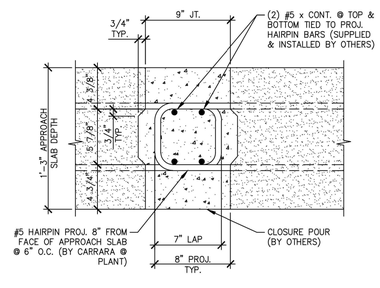


B / F5 APPROACH SLAB CLOSURE POUR
1 1/2" = 1'-0"

Vermont Agency of Transportation
2015-05-11_Castleton-BRF 015(10) RR.pdf
RECEIVED
ON: May 6, 2015
and Checked for
CONFORMANCE
BY: Jennifer Fitch DATE: 05/12/2015

1
Revision 1 5.6.15

**SHOP DRAWING REVIEW**

X REVIEWED AS REQUIRED BY THE CONSTRUCTION CONTRACT DOCUMENTS AND APPROVED, BUT ONLY FOR CONFORMANCE TO THE DESIGN CONCEPT OF THE WORK, AND SUBJECT TO FURTHER LIMITATIONS AND REQUIREMENTS CONTAINED IN THE CONSTRUCTION CONTRACT DOCUMENTS.

☐ REJECTED ☐ REVISE AND RESUBMIT ☐ FURNISH AS CORRECTED

CORRECTIONS OR COMMENTS MADE ON THE SHOP DRAWINGS DURING THIS REVIEW DO NOT RELIEVE CONTRACTOR FROM COMPLIANCE WITH REQUIREMENTS OF THE DRAWINGS AND SPECIFICATIONS. THIS CHECK IS ONLY FOR REVIEW OF GENERAL CONFORMANCE WITH THE DESIGN CONCEPT OF THE PROJECT AND GENERAL COMPLIANCE WITH THE INFORMATION GIVEN IN THE CONTRACT DOCUMENTS. THE CONTRACTOR IS RESPONSIBLE FOR: CONFIRMING AND CORRELATING ALL QUANTITIES AND DIMENSIONS; SELECTING FABRICATION PROCESSES AND TECHNIQUES OF CONSTRUCTION; COORDINATING HIS WORK WITH THAT OF ALL OTHER TRADES; AND PERFORMING HIS WORK IN A SAFE AND SATISFACTORY MANNER.

vhb
40 IDX Drive
Building 100, Suite 200
South Burlington, VT 05403
802.497.6100

Job Number: 57632.00
Reviewed By: E.F. LAWES
Date: May 11, 2015

J.P. CARRARA & SONS INC.
Precast & Prestress Manufacturer
2464 CASE STR., MIDDLEBURY, VERMONT 05753 Phone:(802)388-6361 Fax:(802)388-9010

SCHULTZ CONSTRUCTION
CONTRACTOR
BALLSTON SPA, NY

STATE OF VERMONT AGENCY OF TRANSPORTATION
COUNTY OF RUTLAND

TOWN OF CASTLETON
VT ROUTE 30 (RURAL MINOR ARTERIAL)
BRIDGE NO.: 93 PROJECT NO.: BRF 015-2(10)

TRANSVERSE SECTION & DETAILS

| | |
|---|---|
| DATE: | MAY 06, 2015 |
| SCALE: | NOTED |
| CHKD: R.M. | DFTM: PSS |
| JOB NO: | 23456-015 |
| DWG. NO: | F5 |

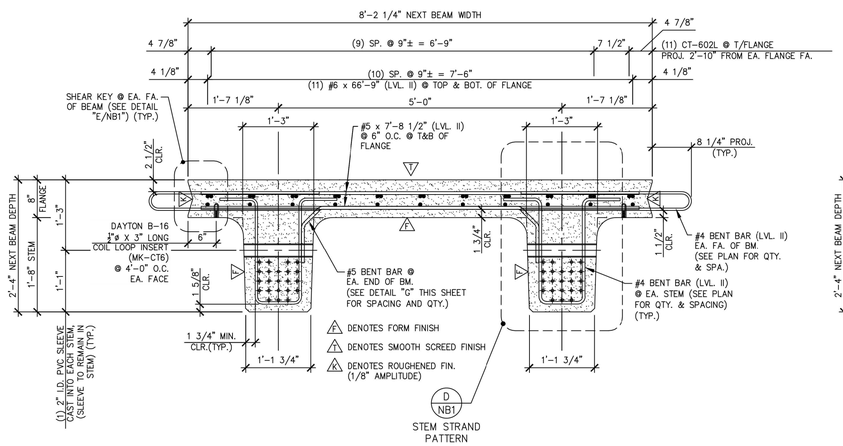


A NB1 DIMENSIONAL & REINFORCING SECTION

3/4" = 1'-0"

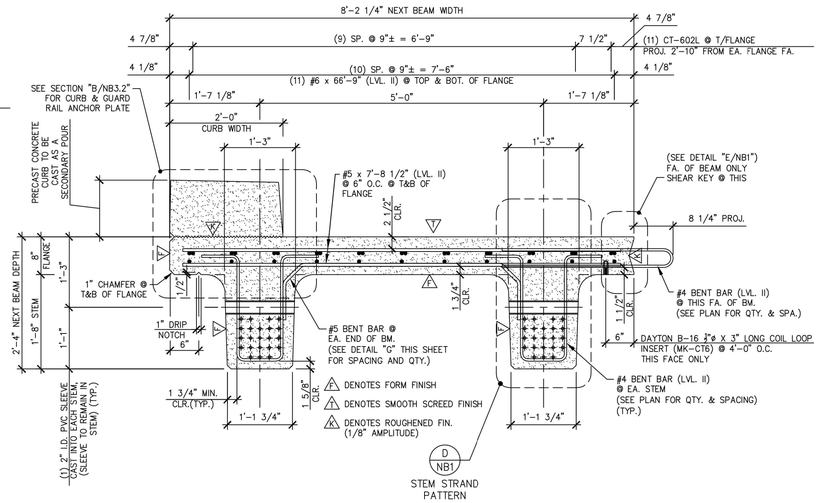


B NB1 DIMENSIONAL & REINFORCING SECTION

3/4" = 1'-0"

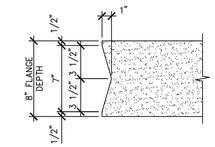


E NB1 SHEAR KEY DETAIL

1 1/2" = 1'-0"

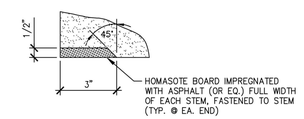


F NB1 HOMASOTE DETAIL

3" = 1'-0"

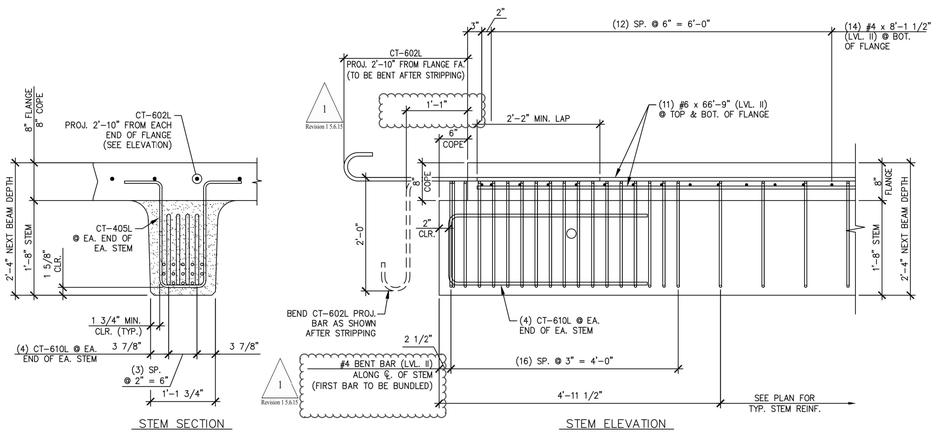


C NB1 END BLOCK STEM REINFORCING DETAILS

3/4" = 1'-0"

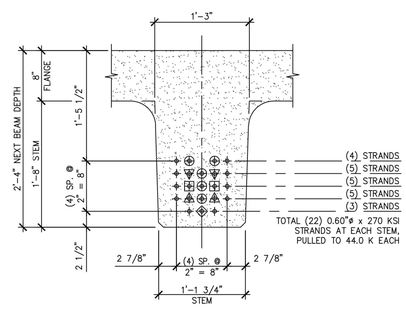


D NB1 STEM STRAND PATTERN

1" = 1'-0"

PRESTRESSING NOTATIONS

- DENOTES STRAIGHT STRANDS TO BE CUT FLUSH WITH EA. END OF EA. STEM
- DENOTES STRAIGHT STRANDS TO BE DEBONDED 6" FROM EA. END OF EA. STEM
- DENOTES STRAIGHT STRANDS TO BE DEBONDED 4'-0" FROM EA. END OF EA. STEM
- DENOTES STRAIGHT STRANDS TO BE DEBONDED 6'-0" FROM EA. END OF EA. STEM
- DENOTES STRAIGHT STRANDS TO BE DEBONDED 8'-0" FROM EA. END OF EA. STEM
- DENOTES STRAIGHT STRANDS TO BE DEBONDED 10'-0" FROM EA. END OF EA. STEM

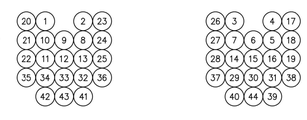


DETENSIONING SCHEDULE

N.T.S.

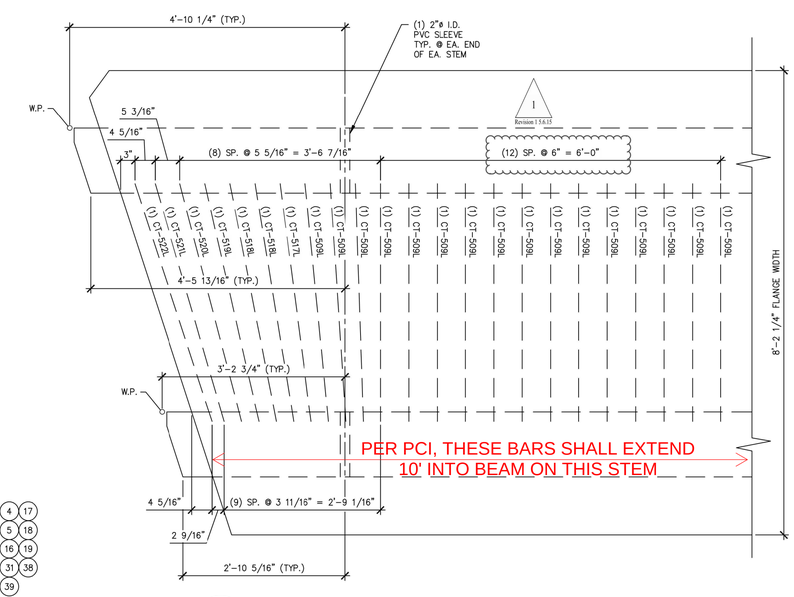


G NB1 ADDITIONAL END ZONE REINFORCING (@ BOTTOM OF FLANGE) & LOCATION OF PVC SLEEVES (@ STEM)

3/4" = 1'-0"

Vermont Agency of Transportation

2015-05-11_Contract-BRF-015(23)-PR.pdf

RECEIVED

ON: May 6, 2015

and Checked for

CONFORMANCE

BY: Jennifer Fitch DATE: 05/12/2015

**SHOP DRAWING REVIEW**

☐ REVIEWED AS REQUIRED BY THE CONSTRUCTION CONTRACT DOCUMENTS AND APPROVED, BUT ONLY FOR CONFORMANCE TO THE DESIGN CONCEPT OF THE WORK, AND SUBJECT TO FURTHER LIMITATIONS AND REQUIREMENTS CONTAINED IN THE CONSTRUCTION CONTRACT DOCUMENTS.

☐ REJECTED ☒ REVISE AND RESUBMIT ☐ FURNISH AS CORRECTED

CORRECTIONS OR COMMENTS MADE ON THE SHOP DRAWINGS DURING THIS REVIEW DO NOT RELIEVE CONTRACTOR FROM COMPLIANCE WITH REQUIREMENTS OF THE DRAWINGS AND SPECIFICATIONS. THIS CHECK IS ONLY FOR REVIEW OF GENERAL CONFORMANCE WITH THE DESIGN CONCEPT OF THE PROJECT AND GENERAL COMPLIANCE WITH THE INFORMATION GIVEN IN THE CONTRACT DOCUMENTS. THE CONTRACTOR IS RESPONSIBLE FOR: CONFIRMING AND CORRELATING ALL QUANTITIES AND DIMENSIONS; SELECTING FABRICATION PROCESSES AND TECHNIQUES OF CONSTRUCTION; COORDINATING HIS WORK WITH THAT OF ALL OTHER TRADES; AND PERFORMING HIS WORK IN A SAFE AND SATISFACTORY MANNER.

vhb 40 IDX Drive, Building 100, Suite 200, South Burlington, VT 05403, 802.497.6100

Job Number: 57632.00
Reviewed By: E.F. LAWES
Date: May 11, 2015

J.P. CARRARA & SONS INC.
Precast & Prestress Manufacturer
2464 CASE STR., MIDDLEBURY, VERMONT 05753 Phone:(802)388-6361 Fax:(802)388-9010

SCHULTZ CONSTRUCTION
CONTRACTOR
BALLSTON SPA, NY

STATE OF VERMONT AGENCY OF TRANSPORTATION
COUNTY OF RUTLAND

TOWN OF CASTLETON
VT ROUTE 30 (RURAL MINOR ARTERIAL)
BRIDGE NO.: 93 PROJECT NO.: BRF 015-2(10)

PRESTRESSED NEXT BEAM DETAILS

| | |
|---|---|
| DATE: | MAY 06, 2015 |
| SCALE: | NOTED |
| CHKD: R.M. | DFTM: PSS |
| JOB NO: | 23456-015 |
| DWG. NO: | NB1 |

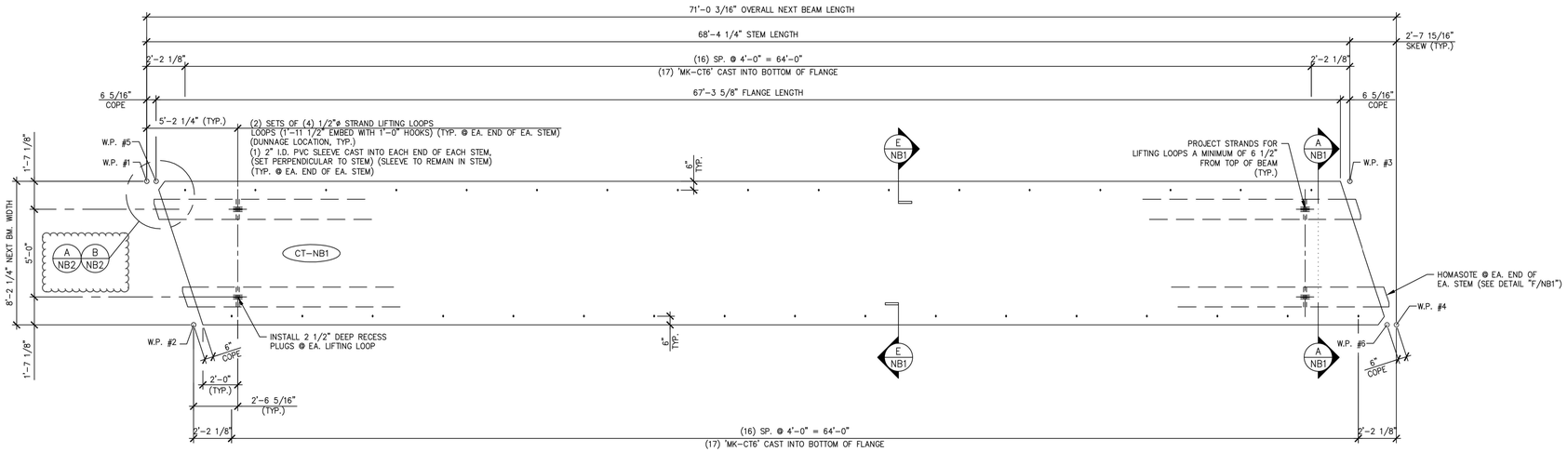


1 NB2 DIMENSIONAL PLAN VIEW IN FORM
1/4" = 1'-0"

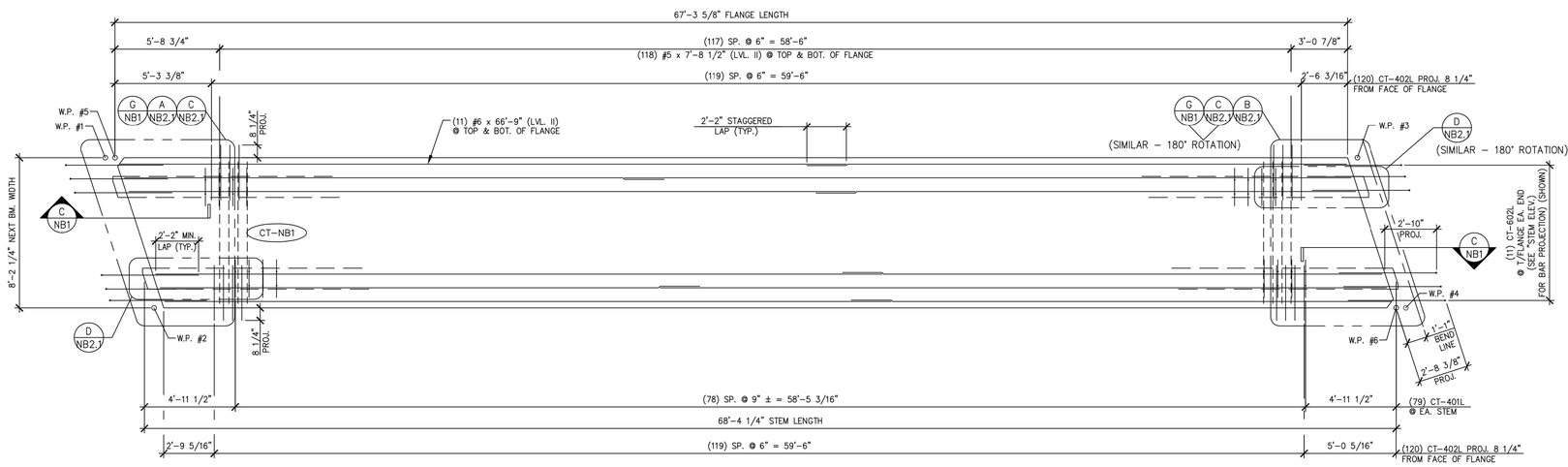


2 NB2 REINFORCING PLAN VIEW IN FORM
1/4" = 1'-0"

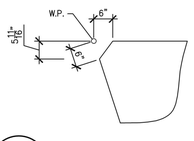


A NB2 ACUTE CORNER BLOCKOUT DETAIL (FOR FLANGE)
1/2" = 1'-0"

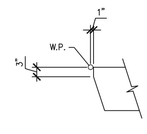


B NB2 ACUTE CORNER BLOCKOUT DETAIL (FOR STEM)
1/2" = 1'-0"

Revision 1.5.6.15

Vermont Agency of Transportation
2015-05-11_Castleton BRF-015(32)3) RR.pdf
RECEIVED
ON: May 6, 2015
and Checked for
CONFORMANCE
BY: Jennifer Fitch DATE: 05/12/2015

| MARK: CT-NB1 | QTY.: 2 | WT.: 48.19 T | VOL.: 23.80 cy |
|---|---|---|---|

MATERIAL LIST / NEXT BEAM

| ITEM | MARK | DESCRIPTION | QTY. |
|---|---|---|---|
| 1 | CT-401L | #4 BENT BAR (LEVEL II, DUAL COATED) | 210 |
| 2 | CT-402L | #4 BENT BAR (LEVEL II, DUAL COATED) | 240 |
| 3 | CT-404L | #4 BENT BAR (LEVEL II, DUAL COATED) | 4 |
| 4 | CT-405L | #4 BENT BAR (LEVEL II, DUAL COATED) | 16 |
| 5 | CT-407L | #4 BENT BAR (LEVEL II, DUAL COATED) | 13 |
| 6 | CT-408L | #4 BENT BAR (LEVEL II, DUAL COATED) | 5 |
| 7 | CT-409L | #4 BENT BAR (LEVEL II, DUAL COATED) | 4 |
| 8 | CT-410L | #4 BENT BAR (LEVEL II, DUAL COATED) | 5 |
| 9 | CT-509L | #5 BENT BAR (LEVEL II, DUAL COATED) | 32 |
| 10 | CT-517L | #5 BENT BAR (LEVEL II, DUAL COATED) | 2 |
| 11 | CT-518L | #5 BENT BAR (LEVEL II, DUAL COATED) | 4 |
| 12 | CT-519L | #5 BENT BAR (LEVEL II, DUAL COATED) | 2 |
| 13 | CT-520L | #5 BENT BAR (LEVEL II, DUAL COATED) | 2 |
| 14 | CT-521L | #5 BENT BAR (LEVEL II, DUAL COATED) | 2 |
| 15 | CT-522L | #5 BENT BAR (LEVEL II, DUAL COATED) | 2 |
| 16 | CT-602L | #6 BENT BAR (LEVEL II, DUAL COATED) | 22 |
| 17 | CT-610L | #6 BENT BAR (LEVEL II, DUAL COATED) | 16 |
| 18 | | | |
| 19 | | | |
| 20 | | | |
| 21 | | | |
| 22 | | #4 x 8'-1 1/2" (LEVEL II, DUAL COATED) | 28 |
| 23 | | #5 x 7'-8 1/2" (LEVEL II, DUAL COATED) | 244 |
| 24 | | #5 x 7'-9" (LEVEL II, DUAL COATED) | 12 |
| 25 | | #5 x 7'-10" (LEVEL II, DUAL COATED) | 8 |
| 26 | | #5 x 7'-11" (LEVEL II, DUAL COATED) | 8 |
| 27 | | #5 x 8'-0" (LEVEL II, DUAL COATED) | 8 |
| 28 | | | |
| 29 | | #6 x 66'-9" (W/ (1) 2'-2" STAGGERED LAP) (40' + 28'-11") (LVL. II, DUAL COATED) | 22 |
| 30 | | | |
| 31 | | | |
| 32 | | | |
| 33 | | 2"ø I.D. PVC SLEEVE | 4 |
| 34 | | SET OF (4) 1/2"ø x 270 KSI STRAND LIFTING LOOPS | 4 |
| 35 | MK-CT6 | DAYTON B-16 1/2"ø x 3" LONG COIL LOOP INSERTS (ELECTROPLATED GALV.) | 34 |

Revision 1.5.6.15

SHOP DRAWING REVIEW

☐ REVIEWED AS REQUIRED BY THE CONSTRUCTION CONTRACT DOCUMENTS AND APPROVED, BUT ONLY FOR CONFORMANCE TO THE DESIGN CONCEPT OF THE WORK, AND SUBJECT TO FURTHER LIMITATIONS AND REQUIREMENTS CONTAINED IN THE CONSTRUCTION CONTRACT DOCUMENTS.
☐ REJECTED ☒ REVISE AND RESUBMIT ☐ FURNISH AS CORRECTED

CORRECTIONS OR COMMENTS MADE ON THE SHOP DRAWINGS DURING THIS REVIEW DO NOT RELIEVE CONTRACTOR FROM COMPLIANCE WITH REQUIRMENTS OF THE DRAWINGS AND SPECIFICATIONS. THIS CHECK IS ONLY FOR REVIEW OF GENERAL CONFORMANCE WITH THE DESIGN CONCEPT OF THE PROJECT AND GENERAL COMPLIANCE WITH THE INFORMATION GIVEN IN THE CONTRACT DOCUMENTS. THE CONTRACTOR IS RESPONSIBLE FOR: CONFIRMING AND CORRELATING ALL QUANTITIES AND DIMENSIONS; SELECTING FABRICATION PROCESSES AND TECHNIQUES OF CONSTRUCTION; COORDINATING HIS WORK WITH THAT OF ALL OTHER TRADES; AND PERFORMING HIS WORK IN A SAFE AND SATISFACTORY MANNER.

vhb 40 IDX Drive, Building 100, Suite 200, South Burlington, VT 05403, 802.497.6100
Job Number: 57632.00
Reviewed By: E.F. LAWES
Date: May 11, 2015

J.P. CARRARA & SONS INC.
Precast & Prestress Manufacturer
2464 CASE STR., MIDDLEBURY, VERMONT 05753 Phone:(802)388-6361 Fax:(802)388-9010

SCHULTZ CONSTRUCTION
CONTRACTOR
BALLSTON SPA, NY

STATE OF VERMONT AGENCY OF TRANSPORTATION
COUNTY OF RUTLAND

TOWN OF CASTLETON
VT ROUTE 30 (RURAL MINOR ARTERIAL)
BRIDGE NO.: 93 PROJECT NO.: BRF 015-2(10)

PRESTRESSED NEXT BEAM DETAILS "CT-NB1"

DATE: MAY 06, 2015
SCALE: NOTED
CHKD: R.M. DFTM: PSS
JOB NO: 23456-015
DWG. NO: NB2

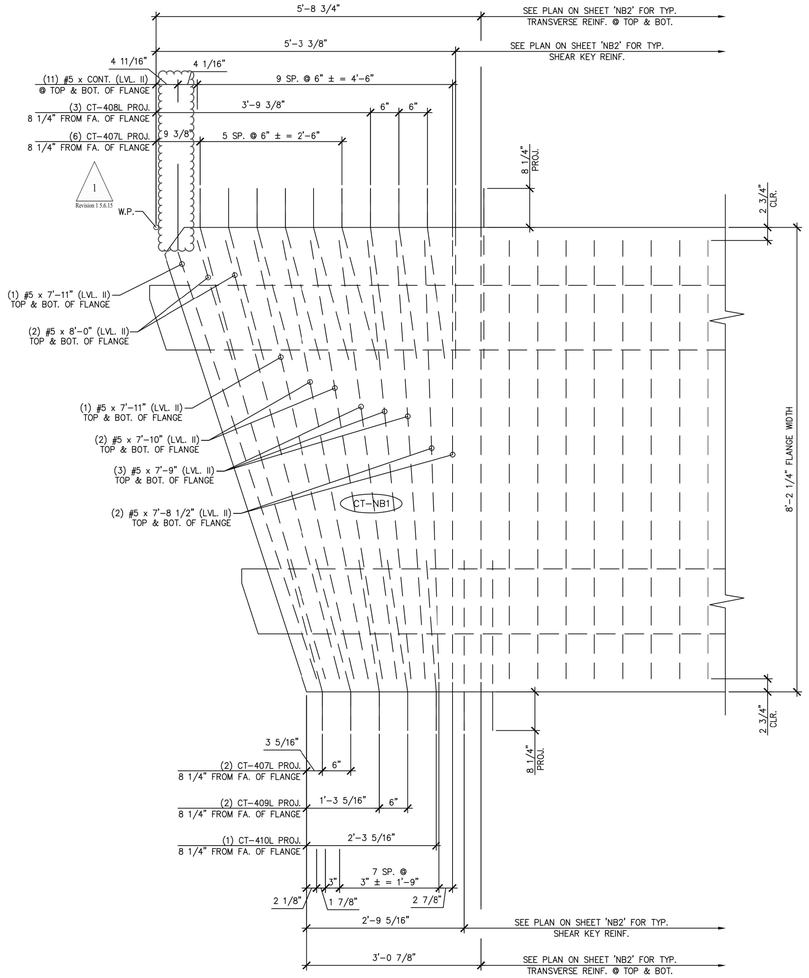


A NB2.1 BEAM END TRANSVERSE/SHEAR KEY REINFORCING

3/4" = 1'-0"

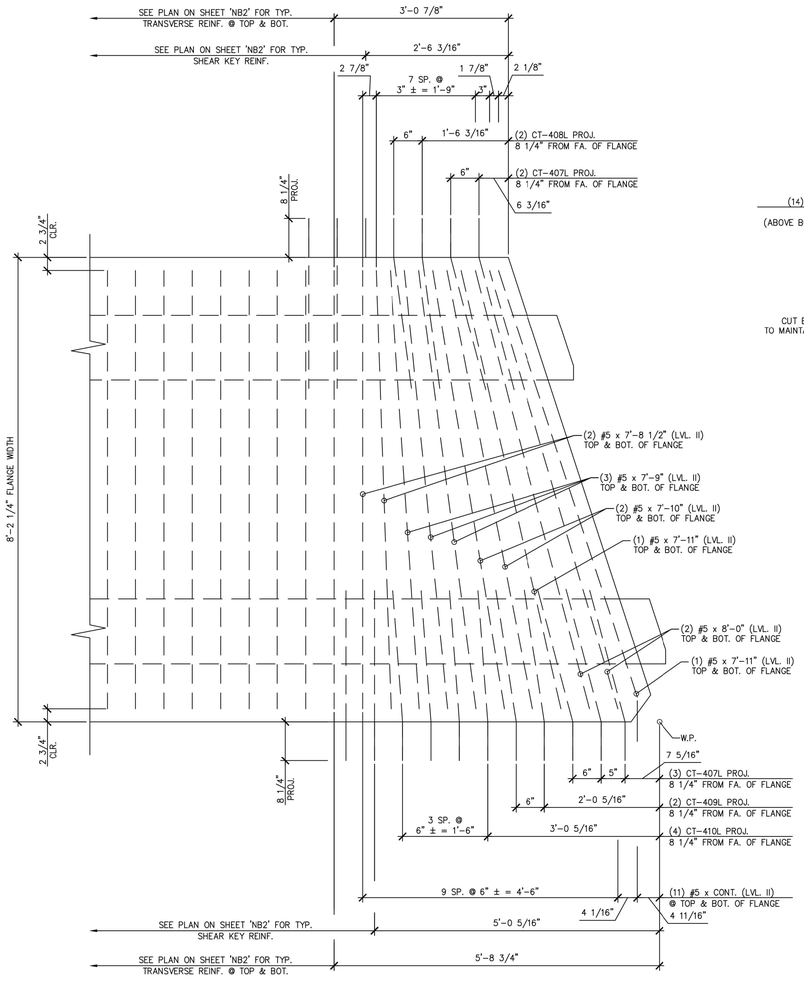


B NB2.1 BEAM END TRANSVERSE/SHEAR KEY REINFORCING

3/4" = 1'-0"

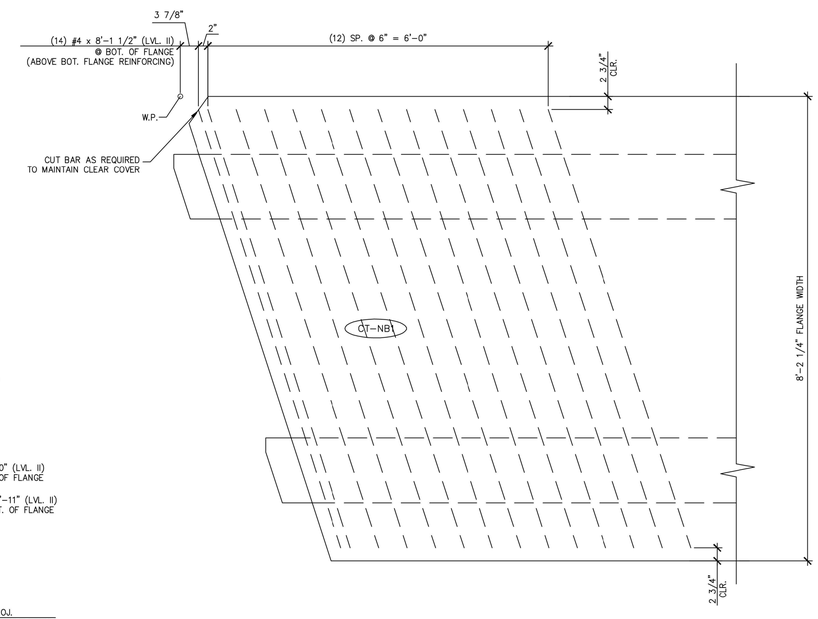


C NB2.1 ADDITIONAL TRANSVERSE REINFORCING AT BOTTOM OF FLANGE

3/4" = 1'-0"

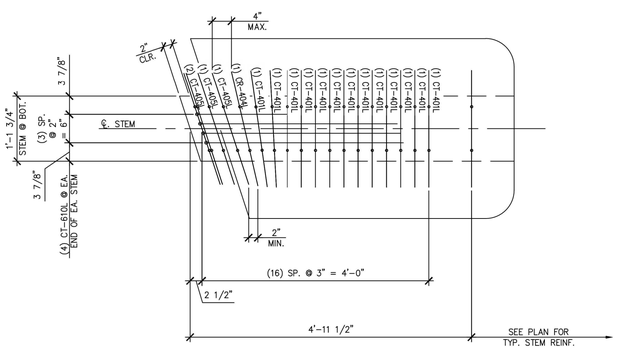


D NB2.1 BEAM END STEM REINFORCING

3/4" = 1'-0"

Vermont Agency of Transportation

2015-05-11_Castleton BRF 015(10) RR.pdf

RECEIVED

ON: May 6, 2015

and Checked for

CONFORMANCE

BY: Jennifer Fitch DATE: 05/12/2015

1 Revision 1 5.6.15

**SHOP DRAWING REVIEW**

☐ REVIEWED AS REQUIRED BY THE CONSTRUCTION CONTRACT DOCUMENTS AND APPROVED, BUT ONLY FOR CONFORMANCE TO THE DESIGN CONCEPT OF THE WORK, AND SUBJECT TO FURTHER LIMITATIONS AND REQUIREMENTS CONTAINED IN THE CONSTRUCTION CONTRACT DOCUMENTS.

☐ REJECTED ☒ REVISE AND RESUBMIT ☐ FURNISH AS CORRECTED

CORRECTIONS OR COMMENTS MADE ON THE SHOP DRAWINGS DURING THIS REVIEW DO NOT RELIEVE CONTRACTOR FROM COMPLIANCE WITH REQUIRMENTS OF THE DRAWINGS AND SPECIFICATIONS. THIS CHECK IS ONLY FOR REVIEW OF GENERAL CONFORMANCE WITH THE DESIGN CONCEPT OF THE PROJECT AND GENERAL COMPLIANCE WITH THE INFORMATION GIVEN IN THE CONTRACT DOCUMENTS. THE CONTRACTOR IS RESPONSIBLE FOR: CONFIRMING AND CORRELATING ALL QUANTITIES AND DIMENSIONS; SELECTING FABRICATION PROCESSES AND TECHNIQUES OF CONSTRUCTION; COORDINATING HIS WORK WITH THAT OF ALL OTHER TRADES; AND PERFORMING HIS WORK IN A SAFE AND SATISFACTORY MANNER.

vhb 40 IDX Drive, Building 100, Suite 200, South Burlington, VT 05403, 802.497.6100

Job Number: 57632.00
Reviewed By: E.F. LAWES
Date: May 11, 2015

J.P. CARRARA & SONS INC.
Precast & Prestress Manufacturer
2464 CASE STR., MIDDLEBURY, VERMONT 05753 Phone:(802)388-6361 Fax:(802)388-9010

SCHULTZ CONSTRUCTION
CONTRACTOR
BALLSTON SPA, NY

STATE OF VERMONT AGENCY OF TRANSPORTATION
COUNTY OF RUTLAND

TOWN OF CASTLETON
VT ROUTE 30 (RURAL MINOR ARTERIAL)
BRIDGE NO.: 93 PROJECT NO.: BRF 015-2(10)

PRESTRESSED NEXT BEAM DETAILS "CT-NB1"

| | |
|---|---|
| DATE: | MAY 06, 2015 |
| SCALE: | NOTED |
| CHKD: R.M. | DFTM: PSS |
| JOB NO: | 23456-015 |
| DWG. NO: | NB2.1 |

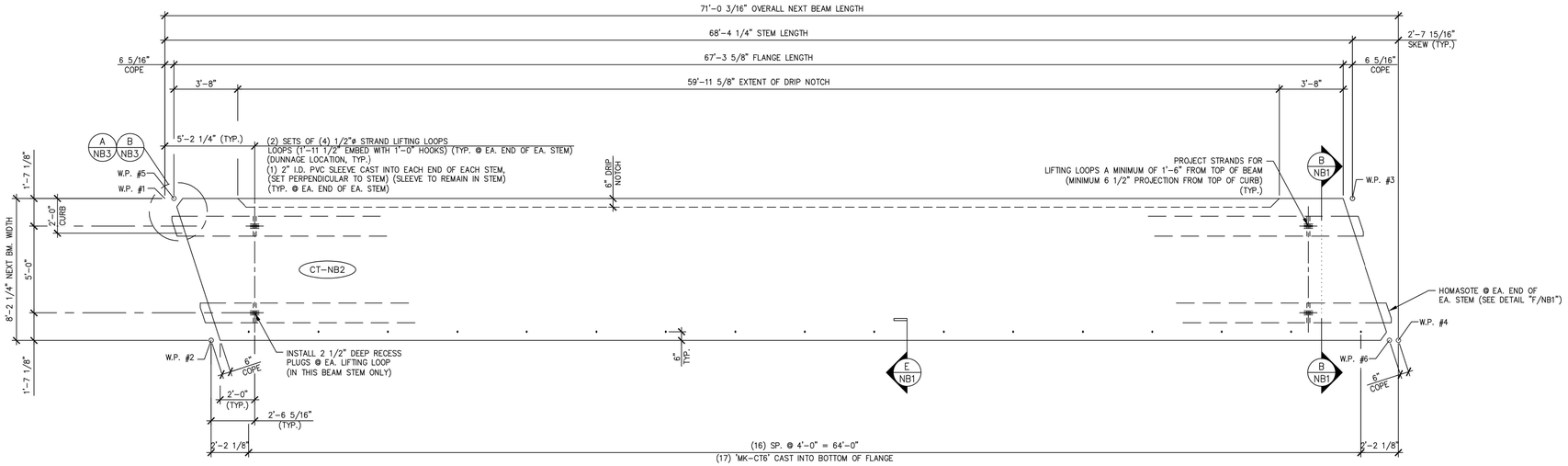


1 NB3 DIMENSIONAL PLAN VIEW IN FORM
(SEE SHEET 'NB3.2' FOR DETAILS OF PRECAST CONCRETE CURB TO BE CAST AS SECONDARY POUR) 1/4" = 1'-0"

VERIFY REINFORCING IS SPACED PROPERLY PER CORRECT BRIDGE RAILING LAYOUT AS SPECIFIED ON PREVIOUS SHEET.

1 Revision 1 5.6.15

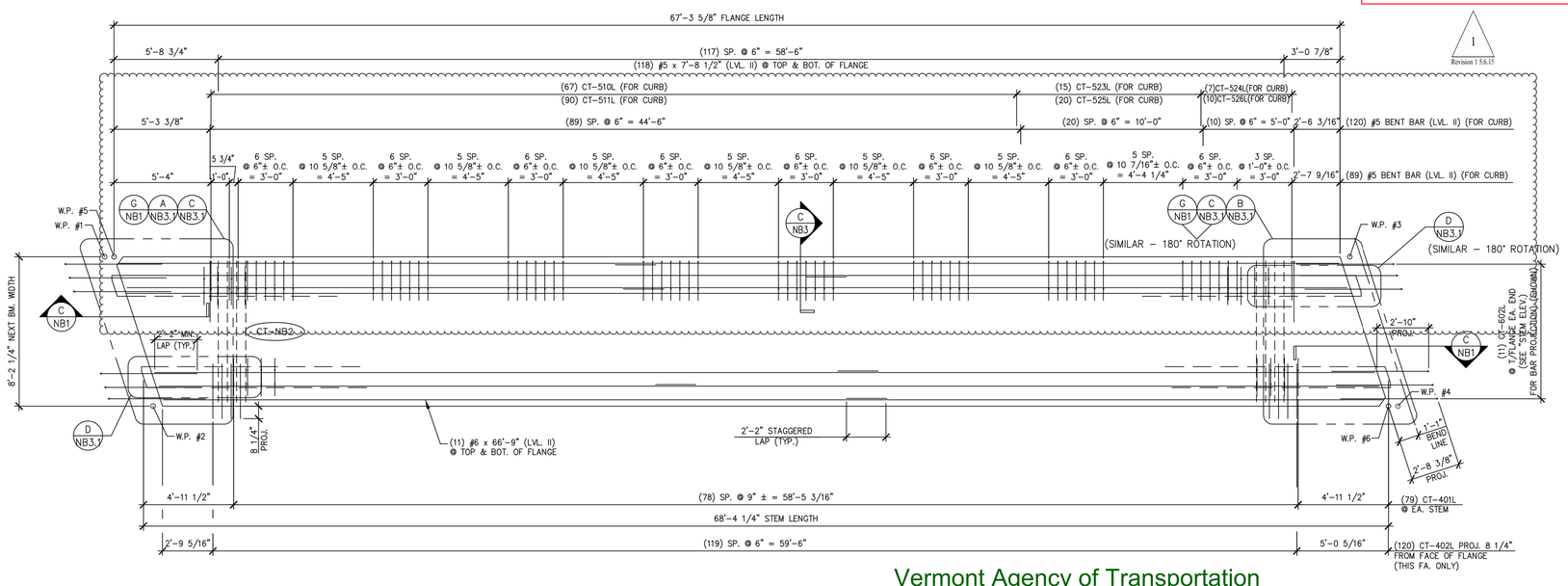


2 NB3 REINFORCING PLAN VIEW IN FORM
(SEE SHEET 'NB3.2' FOR ADDITIONAL PRECAST CONCRETE CURB REINFORCEMENT) 1/4" = 1'-0"

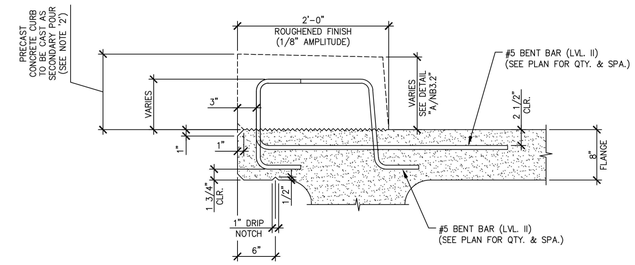


C NB3 SECTION FOR CURB REINFORCEMENT
TYP. BEAM REINF. NOT SHOWN FOR CLARITY 1" = 1'-0"

SHOP NOTES:
1. TOTAL BEAM WEIGHT INCLUDES THE WEIGHT OF PRECAST CONCRETE CURB TO BE CAST AS A SECONDARY POUR.
2. SEE SHEET 'NB3.2' FOR PRECAST CONCRETE CURB DETAILS TO BE CAST AS A SECONDARY POUR.

| MARK: CT-NB2 | QTY.: 1 | WT.: 56.90 T | VOL.: 28.10 cy |
|---|---|---|---|

MATERIAL LIST / NEXT BEAM

| ITEM | MARK | DESCRIPTION | QTY. |
|---|---|---|---|
| 1 | CT-401L | #4 BENT BAR (LEVEL II, DUAL COATED) | 210 |
| 2 | CT-402L | #4 BENT BAR (LEVEL II, DUAL COATED) | 120 |
| 3 | CT-404L | #4 BENT BAR (LEVEL II, DUAL COATED) | 4 |
| 4 | CT-405L | #4 BENT BAR (LEVEL II, DUAL COATED) | 16 |
| 5 | CT-407L | #4 BENT BAR (LEVEL II, DUAL COATED) | 5 |
| 6 | CT-409L | #4 BENT BAR (LEVEL II, DUAL COATED) | 4 |
| 7 | CT-410L | #4 BENT BAR (LEVEL II, DUAL COATED) | 5 |
| 8 | CT-509L | #5 BENT BAR (LEVEL II, DUAL COATED) | 32 |
| 9 | CT-510L | #5 BENT BAR (LEVEL II, DUAL COATED) | 73 |
| 10 | CT-511L | #5 BENT BAR (LEVEL II, DUAL COATED) | 100 |
| 11 | CT-512L | #5 BENT BAR (LEVEL II, DUAL COATED) | 1 |
| 12 | CT-517L | #5 BENT BAR (LEVEL II, DUAL COATED) | 2 |
| 13 | CT-518L | #5 BENT BAR (LEVEL II, DUAL COATED) | 4 |
| 14 | CT-519L | #5 BENT BAR (LEVEL II, DUAL COATED) | 2 |
| 15 | CT-520L | #5 BENT BAR (LEVEL II, DUAL COATED) | 2 |
| 16 | CT-521L | #5 BENT BAR (LEVEL II, DUAL COATED) | 2 |
| 17 | CT-522L | #5 BENT BAR (LEVEL II, DUAL COATED) | 2 |
| 18 | CT-523L | #5 BENT BAR (LEVEL II, DUAL COATED) | 15 |
| 19 | CT-524L | #5 BENT BAR (LEVEL II, DUAL COATED) | 11 |
| 20 | CT-525L | #5 BENT BAR (LEVEL II, DUAL COATED) | 20 |
| 21 | CT-526L | #5 BENT BAR (LEVEL II, DUAL COATED) | 15 |
| 22 | CT-528L | #5 BENT BAR (LEVEL II, DUAL COATED) | 1 |
| 23 | CT-602L | #6 BENT BAR (LEVEL II, DUAL COATED) | 22 |
| 24 | CT-610L | #6 BENT BAR (LEVEL II, DUAL COATED) | 16 |
| 25 | | | |
| 26 | | #4 x 8'-1 1/2" (LEVEL II, DUAL COATED) | 28 |
| 27 | | #5 x 7'-8 1/2" (LEVEL II, DUAL COATED) | 244 |
| 28 | | #5 x 7'-9" (LEVEL II, DUAL COATED) | 12 |
| 29 | | #5 x 7'-10" (LEVEL II, DUAL COATED) | 8 |
| 30 | | #5 x 7'-11" (LEVEL II, DUAL COATED) | 8 |
| 31 | | #5 x 8'-0" (LEVEL II, DUAL COATED) | 8 |
| 32 | | #6 x 66'-9" (W/ (1) 2'-2" STAGGERED LAP) (40' + 28'-11") (LVL. II, DUAL COATED) | 22 |
| 33 | | #5 x 69'-7" (W/ (1) 2'-2" STAGGERED LAP) (40' + 31'-9") (LVL. II, DUAL COATED) | 3 |
| 34 | | | |
| 35 | | 2"ø I.D. PVC SLEEVE | 4 |
| 36 | | SET OF (4) 1/2"ø x 270 KSI STRAND LIFTING LOOPS | 4 |
| 37 | | GUARD RAIL ANCHOR PLATE (GALV.) (SUPPLIED BY OTHERS) | 8 |
| 38 | MK-CT6 | DAYTON B-16 1/2"ø x 3" LONG COIL LOOP INSERTS (ELECTROPLATED GALV.) | 17 |
| 39 | | | |

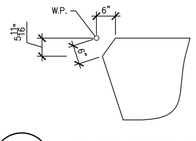


A NB3 ACUTE CORNER BLOCKOUT DETAIL (FOR FLANGE) 1/2" = 1'-0"

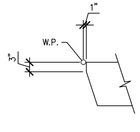


B NB3 ACUTE CORNER BLOCKOUT DETAIL (FOR STEM) 1/2" = 1'-0"

Vermont Agency of Transportation
2015-05-11_Castleton BRF 015(10) RR.pdf
RECEIVED
ON: May 6, 2015
and Checked for
CONFORMANCE
BY: Jennifer Fitch DATE: 05/12/2015

1 Revision 1 5.6.15

SHOP DRAWING REVIEW

☐ REVIEWED AS REQUIRED BY THE CONSTRUCTION CONTRACT DOCUMENTS AND APPROVED, BUT ONLY FOR CONFORMANCE TO THE DESIGN CONCEPT OF THE WORK, AND SUBJECT TO FURTHER LIMITATIONS AND REQUIREMENTS CONTAINED IN THE CONSTRUCTION CONTRACT DOCUMENTS.

☐ REJECTED ☒ REVISE AND RESUBMIT ☐ FURNISH AS CORRECTED

CORRECTIONS OR COMMENTS MADE ON THE SHOP DRAWINGS DURING THIS REVIEW DO NOT RELIEVE CONTRACTOR FROM COMPLIANCE WITH REQUIRMENTS OF THE DRAWINGS AND SPECIFICATIONS. THIS CHECK IS ONLY FOR REVIEW OF GENERAL CONFORMANCE WITH THE DESIGN CONCEPT OF THE PROJECT AND GENERAL COMPLIANCE WITH THE INFORMATION GIVEN IN THE CONTRACT DOCUMENTS. THE CONTRACTOR IS RESPONSIBLE FOR: CONFIRMING AND CORRELATING ALL QUANTITIES AND DIMENSIONS; SELECTING FABRICATION PROCESSES AND TECHNIQUES OF CONSTRUCTION; COORDINATING HIS WORK WITH THAT OF ALL OTHER TRADES; AND PERFORMING HIS WORK IN A SAFE AND SATISFACTORY MANNER.

vhb 40 IDX Drive, Building 100, Suite 200, South Burlington, VT 05403, 802.497.6100

Job Number: 57632.00
Reviewed By: E.F. LAWES
Date: May 11, 2015

J.P. CARRARA & SONS INC.
Precast & Prestress Manufacturer
2464 CASE STR., MIDDLEBURY, VERMONT 05753 Phone:(802)388-6361 Fax:(802)388-9010

SCHULTZ CONSTRUCTION
CONTRACTOR
BALLSTON SPA, NY

STATE OF VERMONT AGENCY OF TRANSPORTATION
COUNTY OF RUTLAND

TOWN OF CASTLETON
VT ROUTE 30 (RURAL MINOR ARTERIAL)
BRIDGE NO.: 93 PROJECT NO.: BRF 015-2(10)

PRESTRESSED NEXT BEAM DETAILS "CT-NB2"

DATE: MAY 06, 2015
SCALE: NOTED
CHKD: R.M. DFTM: PSS
JOB NO: 23456-015
DWG. NO: NB3

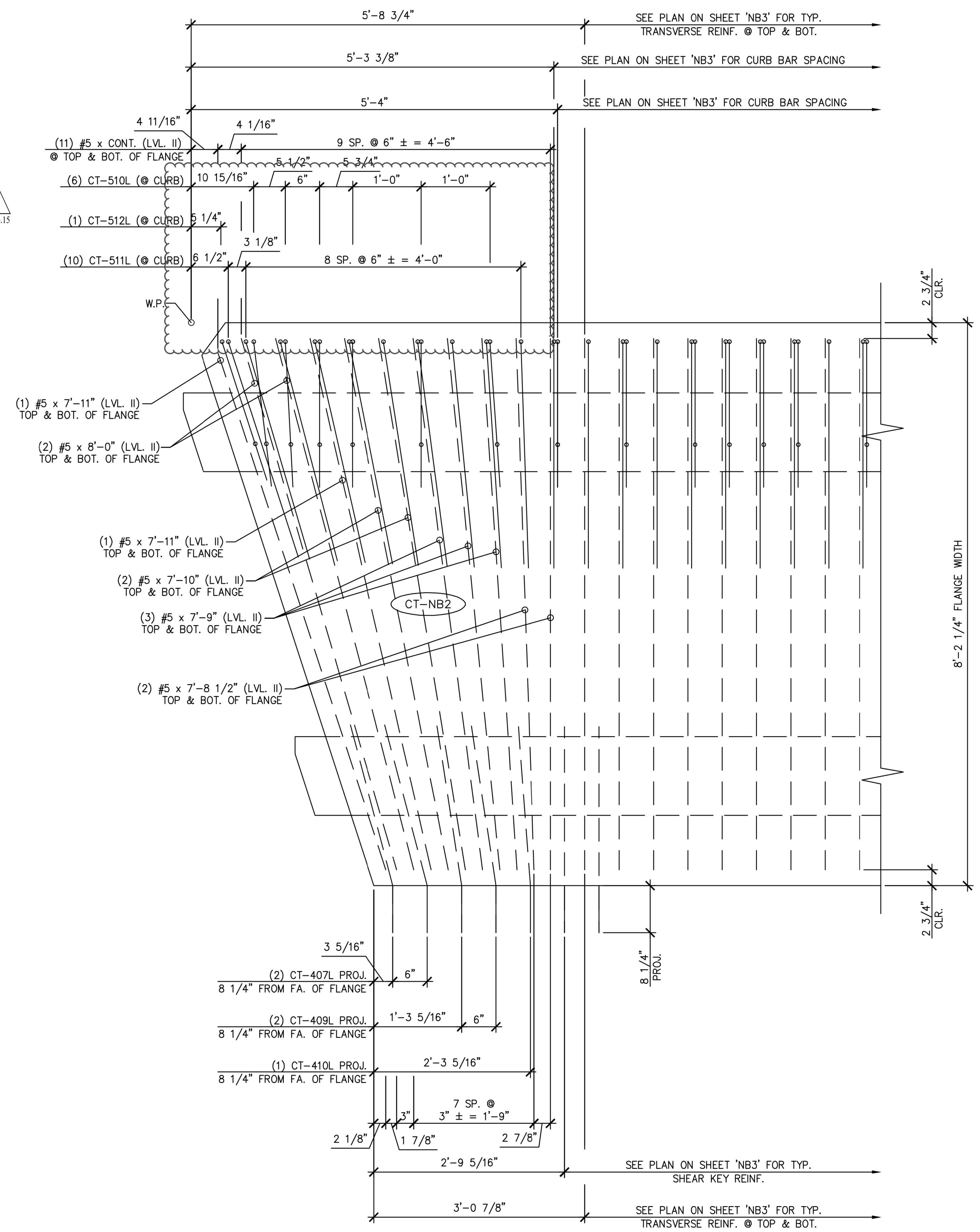


A NB3.1 BEAM END TRANSVERSE/SHEAR KEY/CURB REINFORCING
3/4" = 1'-0"

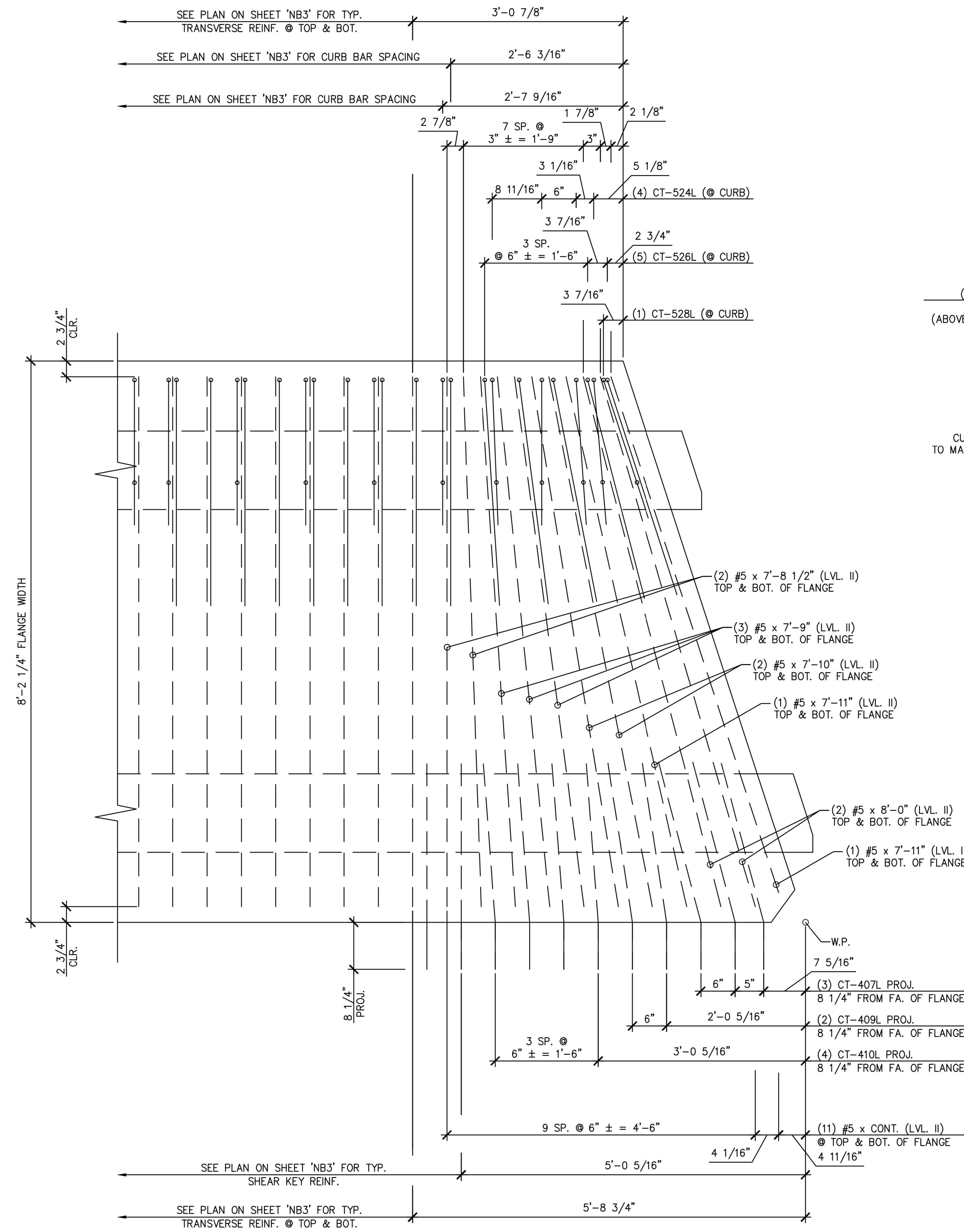


B NB3.1 BEAM END TRANSVERSE/SHEAR KEY/CURB REINFORCING
3/4" = 1'-0"

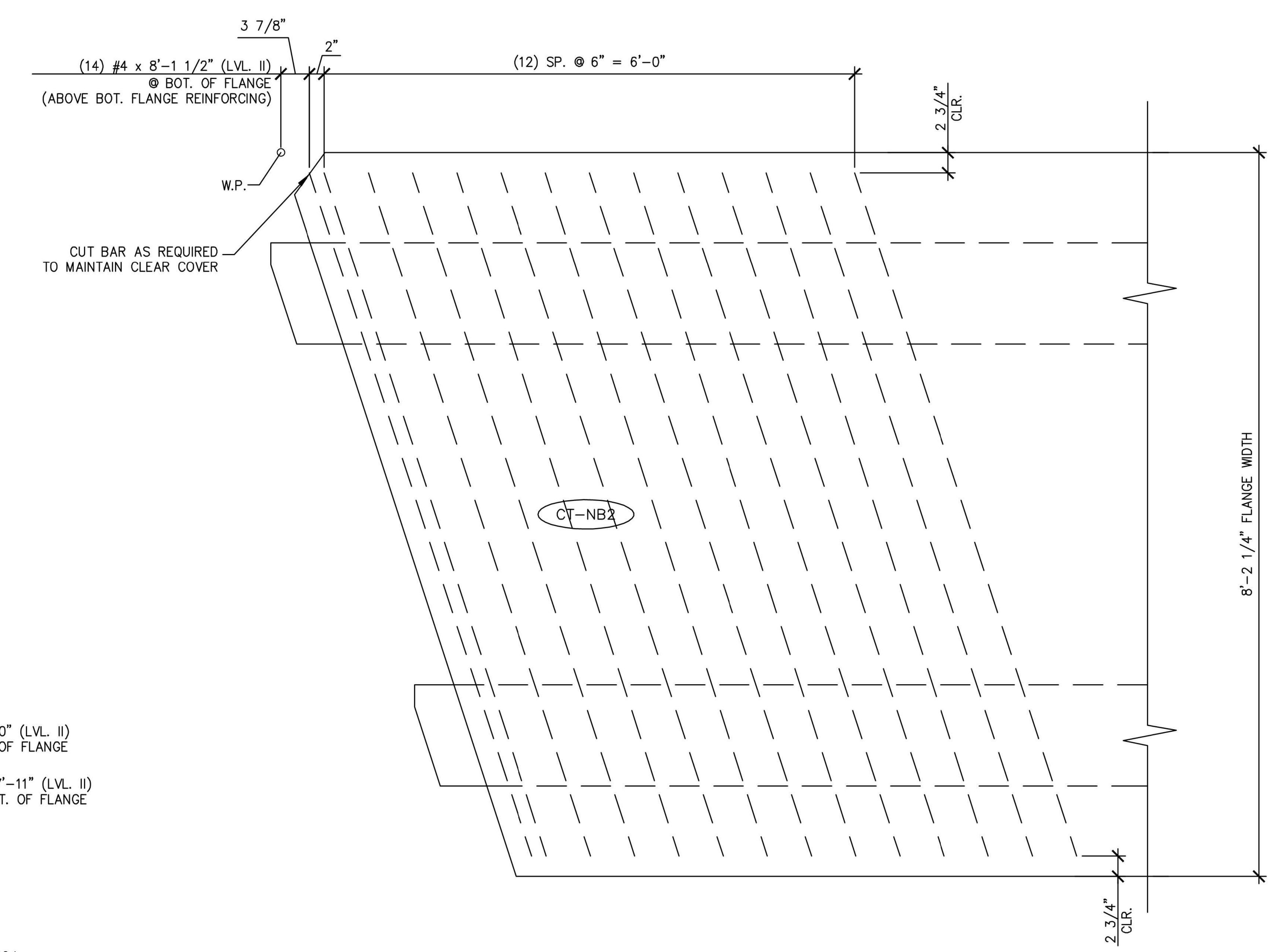


C NB3.1 ADDITIONAL TRANSVERSE REINFORCING AT BOTTOM OF FLANGE
3/4" = 1'-0"

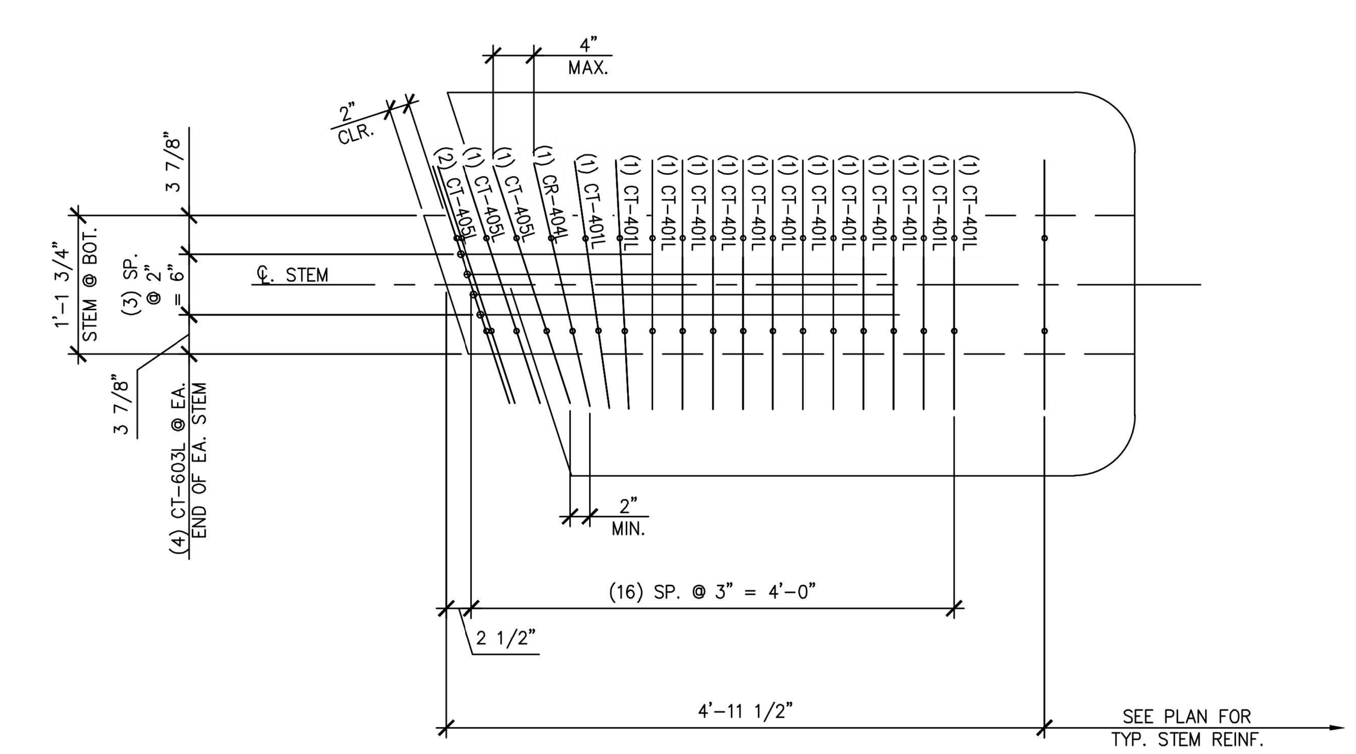


D NB3.1 BEAM END STEM REINFORCING
3/4" = 1'-0"

1
Revision 1 5.6.15

1
Revision 1 5.6.15

Vermont Agency of Transportation
2015-05-11_Castleton BRF 0152(10) RR.pdf
RECEIVED
ON: May 6, 2015
and Checked for
CONFORMANCE
BY: Jennifer Fitch DATE: 05/12/2015

**SHOP DRAWING REVIEW**

☐ REVIEWED AS REQUIRED BY THE CONSTRUCTION CONTRACT DOCUMENTS AND APPROVED, BUT ONLY FOR CONFORMANCE TO THE DESIGN CONCEPT OF THE WORK, AND SUBJECT TO FURTHER LIMITATIONS AND REQUIREMENTS CONTAINED IN THE CONSTRUCTION CONTRACT DOCUMENTS.
☐ REJECTED ☒ REVISE AND RESUBMIT ☐ FURNISH AS CORRECTED

CORRECTIONS OR COMMENTS MADE ON THE SHOP DRAWINGS DURING THIS REVIEW DO NOT RELIEVE CONTRACTOR FROM COMPLIANCE WITH REQUIRMENTS OF THE DRAWINGS AND SPECIFICATIONS. THIS CHECK IS ONLY FOR REVIEW OF GENERAL CONFORMANCE WITH THE DESIGN CONCEPT OF THE PROJECT AND GENERAL COMPLIANCE WITH THE INFORMATION GIVEN IN THE CONTRACT DOCUMENTS. THE CONTRACTOR IS RESPONSIBLE FOR: CONFIRMING AND CORRELATING ALL QUANTITIES AND DIMENSIONS; SELECTING FABRICATION PROCESSES AND TECHNIQUES OF CONSTRUCTION; COORDINATING HIS WORK WITH THAT OF ALL OTHER TRADES; AND PERFORMING HIS WORK IN A SAFE AND SATISFACTORY MANNER.

vhb
40 IDX Drive
Building 100, Suite 200
South Burlington, VT 05403
802.497.6100

Job Number: 57632.00
Reviewed By: E.F. LAWES
Date: May 11, 2015

| | | |
|---|---|---|
| J.P. CARRARA & SONS INC.<br>Precast & Prestress Manufacturer<br>2464 CASE STR., MIDDLEBURY, VERMONT 05753 Phone:(802)388-6361 Fax:(802)388-9010 | SCHULTZ CONSTRUCTION<br>CONTRACTOR<br>BALLSTON SPA, NY | |
| STATE OF VERMONT AGENCY OF TRANSPORTATION<br>COUNTY OF RUTLAND | | DATE: MAY 06, 2015<br>SCALE: NOTED |
| TOWN OF CASTLETON<br>VT ROUTE 30 (RURAL MINOR ARTERIAL)<br>BRIDGE NO.: 93 PROJECT NO.: BRF 015-2(10) | | CHKD: R.M. DFTM: PSS<br>JOB NO: 23456-015 |
| PRESTRESSED NEXT BEAM DETAILS "CT-NB2" | | DWG. NO: NB3.1 |

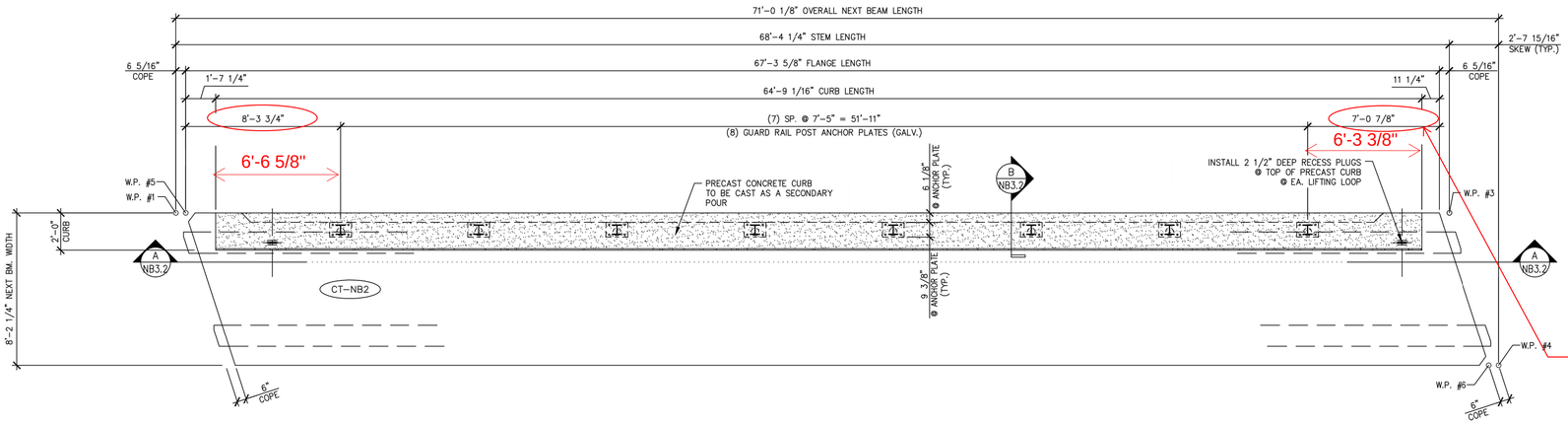


VERIFY POST LOCATIONS WITH CONTRACT PLANS AND UPDATE CURB REINFORCING AS APPROPRIATE.

1 NB3.2 DIMENSIONAL PLAN VIEW FOR SECONDARY POUR

1/4" = 1'-0"

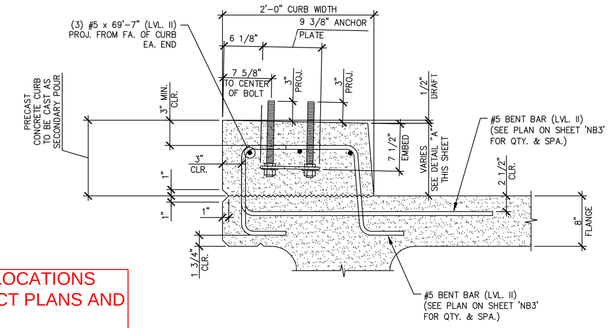


B NB3.2 CURB & GUARD RAIL ANCHOR PLATE SECTION

1" = 1'-0"

TYP. BEAM REINF. NOT SHOWN FOR CLARITY

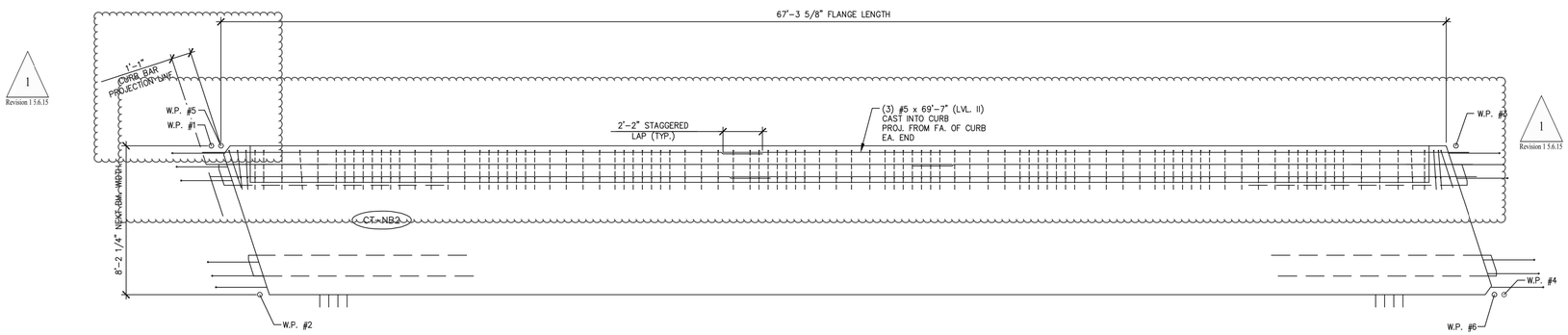


2 NB3.2 REINFORCING PLAN VIEW FOR SECONDARY POUR

1/4" = 1'-0"

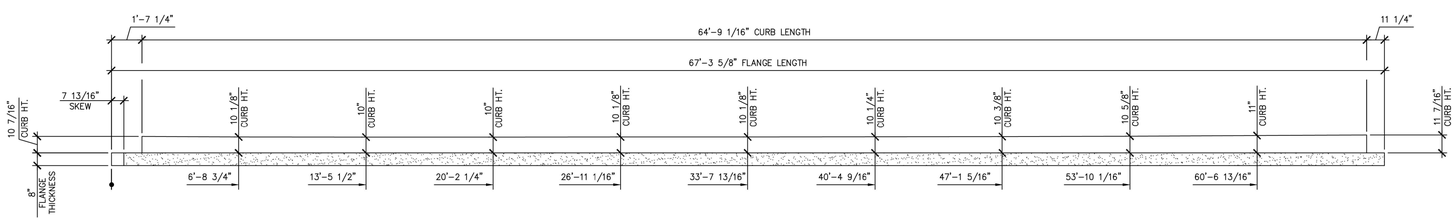


A NB3.2 CURB HEIGHT DETAIL

1/4" = 1'-0"

Revision 1 5.6.15

Vermont Agency of Transportation

2015-06-12_Castleton BRF 015(23) PR.pdf

RECEIVED

ON: May 6, 2015

and Checked for

CONFORMANCE

BY: Jennifer Fitch DATE: 05/12/2015

**SHOP DRAWING REVIEW**

☐ REVIEWED AS REQUIRED BY THE CONSTRUCTION CONTRACT DOCUMENTS AND APPROVED, BUT ONLY FOR CONFORMANCE TO THE DESIGN CONCEPT OF THE WORK, AND SUBJECT TO FURTHER LIMITATIONS AND REQUIREMENTS CONTAINED IN THE CONSTRUCTION CONTRACT DOCUMENTS.

☐ REJECTED ✕ REVISE AND RESUBMIT ☐ FURNISH AS CORRECTED

CORRECTIONS OR COMMENTS MADE ON THE SHOP DRAWINGS DURING THIS REVIEW DO NOT RELIEVE CONTRACTOR FROM COMPLIANCE WITH REQUIRMENTS OF THE DRAWINGS AND SPECIFICATIONS. THIS CHECK IS ONLY FOR REVIEW OF GENERAL CONFORMANCE WITH THE DESIGN CONCEPT OF THE PROJECT AND GENERAL COMPLIANCE WITH THE INFORMATION GIVEN IN THE CONTRACT DOCUMENTS. THE CONTRACTOR IS RESPONSIBLE FOR: CONFIRMING AND CORRELATING ALL QUANTITIES AND DIMENSIONS; SELECTING FABRICATION PROCESSES AND TECHNIQUES OF CONSTRUCTION; COORDINATING HIS WORK WITH THAT OF ALL OTHER TRADES; AND PERFORMING HIS WORK IN A SAFE AND SATISFACTORY MANNER.

vhb 40 IDX Drive, Building 100, Suite 200, South Burlington, VT 05403, 802.497.6100

Job Number: 57632.00
Reviewed By: E.F. LAWES
Date: May 11, 2015

J.P. CARRARA & SONS INC.
Precast & Prestress Manufacturer
2464 CASE STR., MIDDLEBURY, VERMONT 05753 Phone:(802)388-6361 Fax:(802)388-9010

SCHULTZ CONSTRUCTION
CONTRACTOR
BALLSTON SPA, NY

STATE OF VERMONT AGENCY OF TRANSPORTATION
COUNTY OF RUTLAND

DATE: MAY 06, 2015
SCALE: NOTED

TOWN OF CASTLETON
VT ROUTE 30 (RURAL MINOR ARTERIAL)
BRIDGE NO.: 93 PROJECT NO.: BRF 015-2(10)

CHKD: R.M. DFTM: PSS
JOB NO: 23456-015

PRESTRESSED NEXT BEAM DETAILS "CT-NB2"

DWG. NO: NB3.2

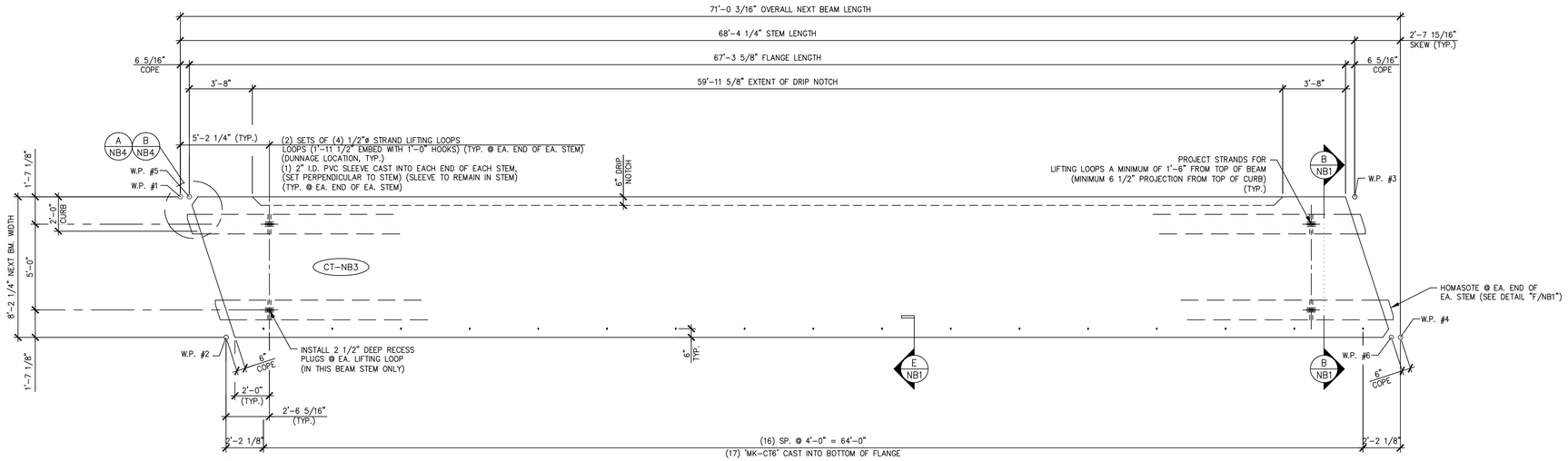


1 NB4 DIMENSIONAL PLAN VIEW IN FORM
(SEE SHEET 'NB4.2' FOR DETAILS OF PRECAST CONCRETE CURB TO BE CAST AS SECONDARY POUR) 1/4" = 1'-0"

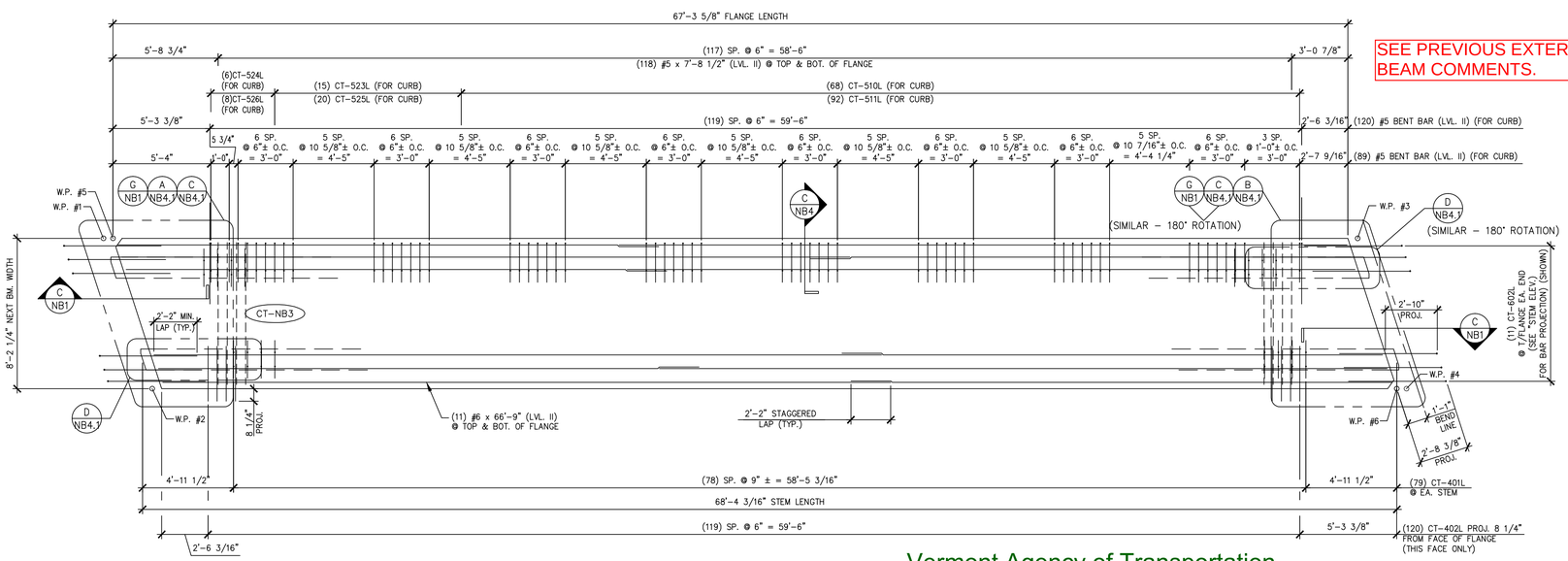


2 NB4 REINFORCING PLAN VIEW IN FORM
(SEE SHEET 'NB4.2' FOR ADDITIONAL PRECAST CONCRETE CURB REINFORCEMENT) 1/4" = 1'-0"

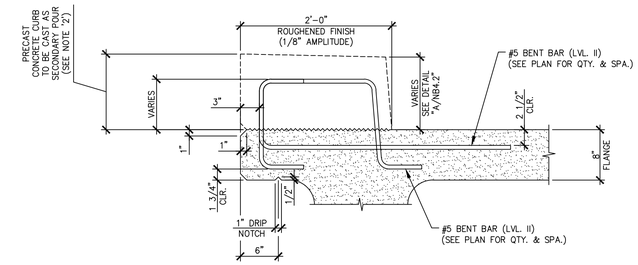


C NB4 SECTION FOR CURB REINFORCEMENT
TYP. BEAM REINF. NOT SHOWN FOR CLARITY 1" = 1'-0"

SHOP NOTES:
1. TOTAL BEAM WEIGHT INCLUDES THE WEIGHT OF PRECAST CONCRETE CURB TO BE CAST AS A SECONDARY POUR.
2. SEE SHEET 'NB4.2' FOR PRECAST CONCRETE CURB DETAILS TO BE CAST AS A SECONDARY POUR.

| MARK: CT-NB3 | QTY.: 1 | WT.: 56.90 T | VOL.: 28.10 cy |
|---|---|---|---|

MATERIAL LIST / NEXT BEAM

| ITEM | MARK | DESCRIPTION | QTY. |
|---|---|---|---|
| 1 | CT-401L | #4 BENT BAR (LEVEL II, DUAL COATED) | 210 |
| 2 | CT-402L | #4 BENT BAR (LEVEL II, DUAL COATED) | 120 |
| 3 | CT-404L | #4 BENT BAR (LEVEL II, DUAL COATED) | 4 |
| 4 | CT-405L | #4 BENT BAR (LEVEL II, DUAL COATED) | 16 |
| 5 | CT-407L | #4 BENT BAR (LEVEL II, DUAL COATED) | 8 |
| 6 | CT-408L | #4 BENT BAR (LEVEL II, DUAL COATED) | 5 |
| 7 | CT-509L | #5 BENT BAR (LEVEL II, DUAL COATED) | 32 |
| 8 | CT-510L | #5 BENT BAR (LEVEL II, DUAL COATED) | 72 |
| 9 | CT-511L | #5 BENT BAR (LEVEL II, DUAL COATED) | 97 |
| 10 | CT-517L | #5 BENT BAR (LEVEL II, DUAL COATED) | 2 |
| 11 | CT-518L | #5 BENT BAR (LEVEL II, DUAL COATED) | 4 |
| 12 | CT-519L | #5 BENT BAR (LEVEL II, DUAL COATED) | 2 |
| 13 | CT-520L | #5 BENT BAR (LEVEL II, DUAL COATED) | 2 |
| 14 | CT-521L | #5 BENT BAR (LEVEL II, DUAL COATED) | 2 |
| 15 | CT-522L | #5 BENT BAR (LEVEL II, DUAL COATED) | 2 |
| 16 | CT-523L | #5 BENT BAR (LEVEL II, DUAL COATED) | 15 |
| 17 | CT-524L | #5 BENT BAR (LEVEL II, DUAL COATED) | 12 |
| 18 | CT-525L | #5 BENT BAR (LEVEL II, DUAL COATED) | 20 |
| 19 | CT-526L | #5 BENT BAR (LEVEL II, DUAL COATED) | 18 |
| 20 | CT-527L | #5 BENT BAR (LEVEL II, DUAL COATED) | 1 |
| 21 | CT-529L | #5 BENT BAR (LEVEL II, DUAL COATED) | 1 |
| 22 | CT-602L | #6 BENT BAR (LEVEL II, DUAL COATED) | 22 |
| 23 | CT-610L | #6 BENT BAR (LEVEL II, DUAL COATED) | 16 |
| 24 | | | |
| 25 | | #4 x 8'-1 1/2" (LEVEL II, DUAL COATED) | 28 |
| 26 | | #5 x 7'-8 1/2" (LEVEL II, DUAL COATED) | 244 |
| 27 | | #5 x 7'-9" (LEVEL II, DUAL COATED) | 12 |
| 28 | | #5 x 7'-10" (LEVEL II, DUAL COATED) | 8 |
| 29 | | #5 x 7'-11" (LEVEL II, DUAL COATED) | 8 |
| 30 | | #5 x 8'-0" (LEVEL II, DUAL COATED) | 8 |
| 31 | | #6 x 66'-9" (W/ (1) 2'-2" STAGGERED LAP) (40' + 28'-11") (LVL. II, DUAL COATED) | 22 |
| 32 | | #5 x 69'-7" (W/ (1) 2'-2" STAGGERED LAP) (40' + 31'-9") (LVL. II, DUAL COATED) | 3 |
| 33 | | | |
| 34 | | 2"ø I.D. PVC SLEEVE | 4 |
| 35 | | SET OF (4) 1/2"ø x 270 KSI STRAND LIFTING LOOPS | 4 |
| 36 | | GUARD RAIL ANCHOR PLATE (GALV.) (SUPPLIED BY OTHERS) | 8 |
| 37 | MK-CT6 | DAYTON B-16 1/2"ø x 3" LONG COIL LOOP INSERTS (ELECTROPLATED GALV.) | 17 |
| 38 | | | |
| 39 | | | |

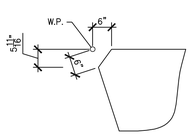


A NB4 ACUTE CORNER BLOCKOUT DETAIL (FOR FLANGE) 1/2" = 1'-0"

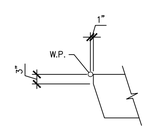


B NB4 ACUTE CORNER BLOCKOUT DETAIL (FOR STEM) 1/2" = 1'-0"

Vermont Agency of Transportation
2015-05-11_Castleton BRF 015(10) RR.pdf
RECEIVED
ON: May 6, 2015
and Checked for
CONFORMANCE
BY: Jennifer Fitch DATE: 05/12/2015

SHOP DRAWING REVIEW

☐ REVIEWED AS REQUIRED BY THE CONSTRUCTION CONTRACT DOCUMENTS AND APPROVED, BUT ONLY FOR CONFORMANCE TO THE DESIGN CONCEPT OF THE WORK, AND SUBJECT TO FURTHER LIMITATIONS AND REQUIREMENTS CONTAINED IN THE CONSTRUCTION CONTRACT DOCUMENTS.
☐ REJECTED ☒ REVISE AND RESUBMIT ☐ FURNISH AS CORRECTED

CORRECTIONS OR COMMENTS MADE ON THE SHOP DRAWINGS DURING THIS REVIEW DO NOT RELIEVE CONTRACTOR FROM COMPLIANCE WITH REQUIRMENTS OF THE DRAWINGS AND SPECIFICATIONS. THIS CHECK IS ONLY FOR REVIEW OF GENERAL CONFORMANCE WITH THE DESIGN CONCEPT OF THE PROJECT AND GENERAL COMPLIANCE WITH THE INFORMATION GIVEN IN THE CONTRACT DOCUMENTS. THE CONTRACTOR IS RESPONSIBLE FOR: CONFIRMING AND CORRELATING ALL QUANTITIES AND DIMENSIONS; SELECTING FABRICATION PROCESSES AND TECHNIQUES OF CONSTRUCTION; COORDINATING HIS WORK WITH THAT OF ALL OTHER TRADES; AND PERFORMING HIS WORK IN A SAFE AND SATISFACTORY MANNER.

vhb 40 IDX Drive, Building 100, Suite 200, South Burlington, VT 05403, 802.497.6100
Job Number: 57632.00
Reviewed By: E.F. LAWES
Date: May 11, 2015

J.P. CARRARA & SONS INC.
Precast & Prestress Manufacturer
2464 CASE STR., MIDDLEBURY, VERMONT 05753 Phone:(802)388-6361 Fax:(802)388-9010

SCHULTZ CONSTRUCTION
CONTRACTOR
BALLSTON SPA, NY

STATE OF VERMONT AGENCY OF TRANSPORTATION
COUNTY OF RUTLAND

TOWN OF CASTLETON
VT ROUTE 30 (RURAL MINOR ARTERIAL)
BRIDGE NO.: 93 PROJECT NO.: BRF 015-2(10)

PRESTRESSED NEXT BEAM DETAILS "CT-NB3"

DATE: MAY 06, 2015
SCALE: NOTED
CHKD: R.M. DFTM: PSS
JOB NO: 23456-015
DWG. NO: NB4

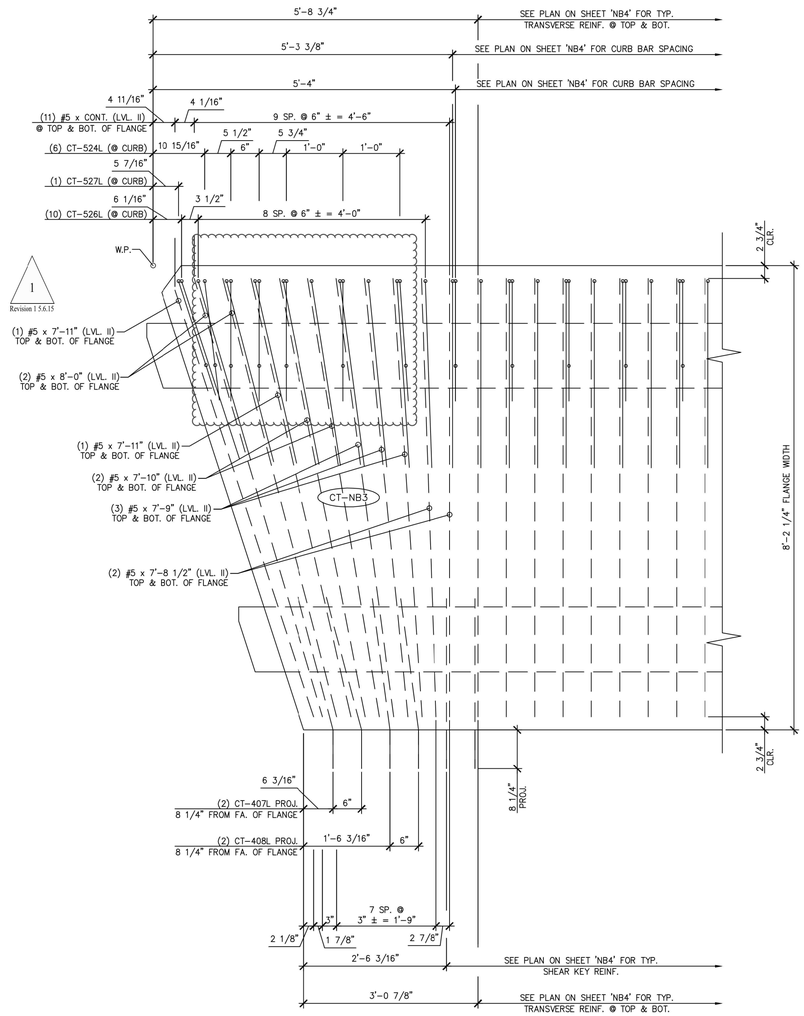


A NB4.1 BEAM END TRANSVERSE/SHEAR KEY/CURB REINFORCING

3/4" = 1'-0"

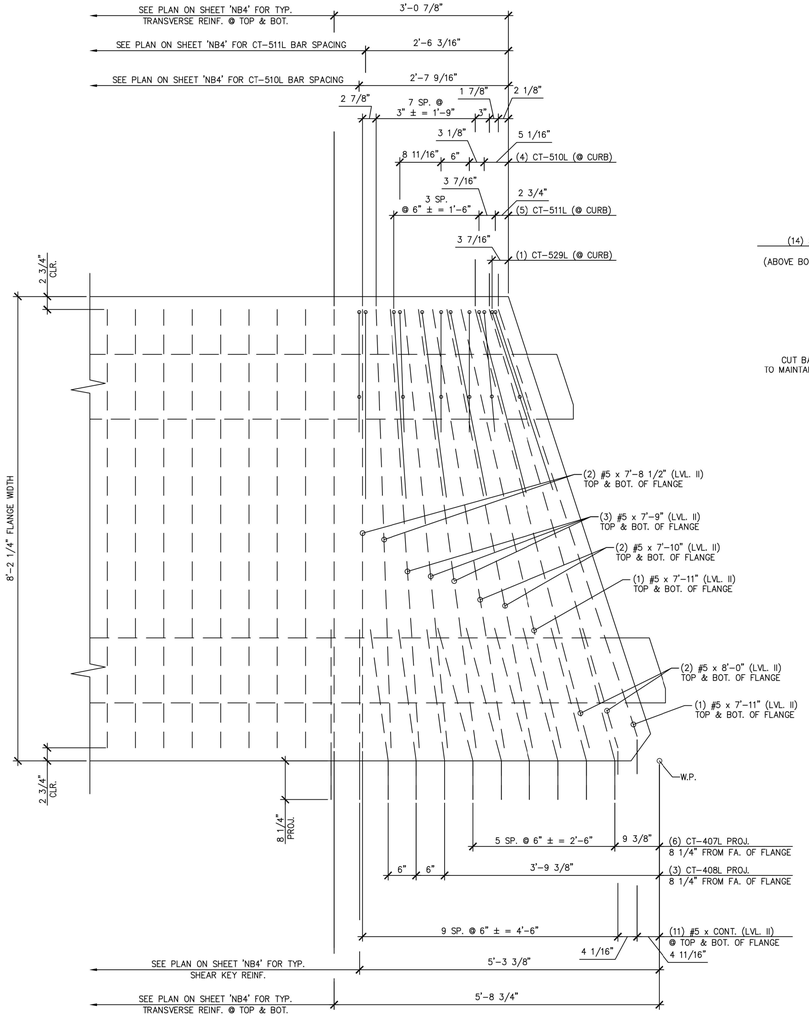


B NB4.1 BEAM END TRANSVERSE/SHEAR KEY/CURB REINFORCING

3/4" = 1'-0"

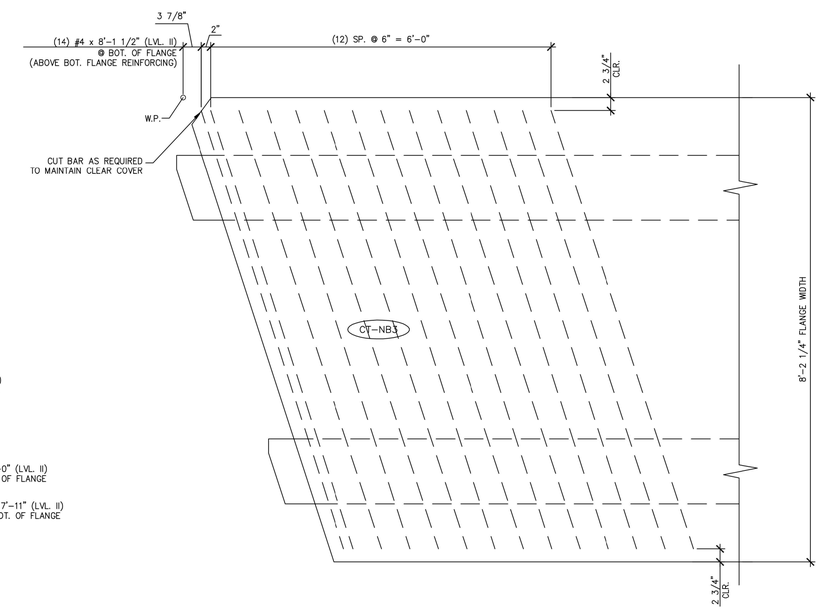


C NB4.1 ADDITIONAL TRANSVERSE REINFORCING AT BOTTOM OF FLANGE

3/4" = 1'-0"

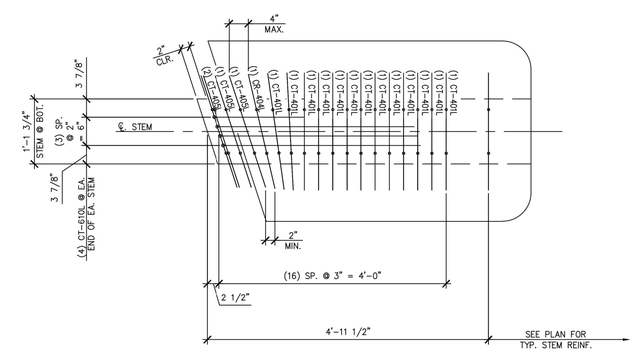


D NB4.1 BEAM END STEM REINFORCING

3/4" = 1'-0"

Vermont Agency of Transportation

2015-05-11_Caldemer BRF 015(10) RR.pdf

RECEIVED

ON: May 6, 2015

and Checked for

CONFORMANCE

BY: Jennifer Fitch DATE: 05/12/2015

1
Revision 1 5.6.15

**SHOP DRAWING REVIEW**

☐ REVIEWED AS REQUIRED BY THE CONSTRUCTION CONTRACT DOCUMENTS AND APPROVED, BUT ONLY FOR CONFORMANCE TO THE DESIGN CONCEPT OF THE WORK, AND SUBJECT TO FURTHER LIMITATIONS AND REQUIREMENTS CONTAINED IN THE CONSTRUCTION CONTRACT DOCUMENTS.

☐ REJECTED ✕ REVISE AND RESUBMIT ☐ FURNISH AS CORRECTED

CORRECTIONS OR COMMENTS MADE ON THE SHOP DRAWINGS DURING THIS REVIEW DO NOT RELIEVE CONTRACTOR FROM COMPLIANCE WITH REQUIRMENTS OF THE DRAWINGS AND SPECIFICATIONS. THIS CHECK IS ONLY FOR REVIEW OF GENERAL CONFORMANCE WITH THE DESIGN CONCEPT OF THE PROJECT AND GENERAL COMPLIANCE WITH THE INFORMATION GIVEN IN THE CONTRACT DOCUMENTS. THE CONTRACTOR IS RESPONSIBLE FOR: CONFIRMING AND CORRELATING ALL QUANTITIES AND DIMENSIONS; SELECTING FABRICATION PROCESSES AND TECHNIQUES OF CONSTRUCTION; COORDINATING HIS WORK WITH THAT OF ALL OTHER TRADES; AND PERFORMING HIS WORK IN A SAFE AND SATISFACTORY MANNER.

vhb
40 IDX Drive
Building 100, Suite 200
South Burlington, VT 05403
802.497.6100

Job Number: 57632.00
Reviewed By: E.F. LAWES
Date: May 11, 2015

J.P. CARRARA & SONS INC.
Precast & Prestress Manufacturer
2464 CASE STR., MIDDLEBURY, VERMONT 05753 Phone:(802)388-6361 Fax:(802)388-9010

SCHULTZ CONSTRUCTION
CONTRACTOR
BALLSTON SPA, NY

STATE OF VERMONT AGENCY OF TRANSPORTATION
COUNTY OF RUTLAND

TOWN OF CASTLETON
VT ROUTE 30 (RURAL MINOR ARTERIAL)
BRIDGE NO.: 93 PROJECT NO.: BRF 015-2(10)

PRESTRESSED NEXT BEAM DETAILS "CT-NB3"

| | |
|---|---|
| DATE: | MAY 06, 2015 |
| SCALE: | NOTED |
| CHKD: R.M. | DFTM: PSS |
| JOB NO: | 23456-015 |
| DWG. NO: | NB4.1 |

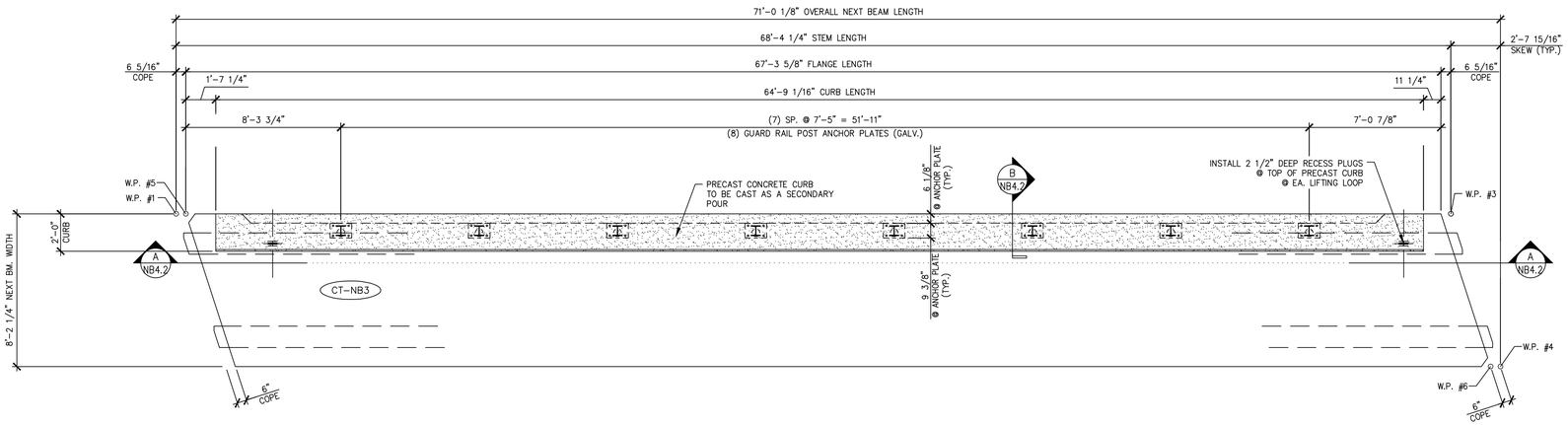


1 NB4.2 DIMENSIONAL PLAN VIEW FOR SECONDARY POUR

1/4" = 1'-0"

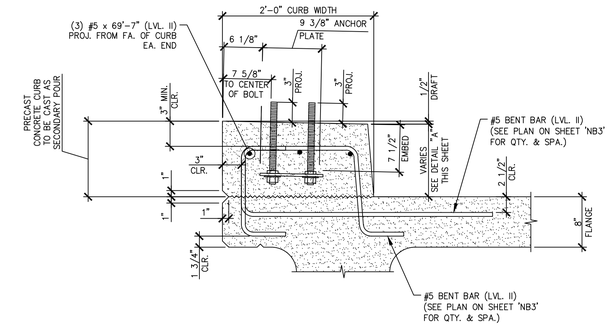


B NB4.2 CURB & GUARD RAIL ANCHOR PLATE SECTION

1" = 1'-0"

TYP. BEAM REINF. NOT SHOWN FOR CLARITY

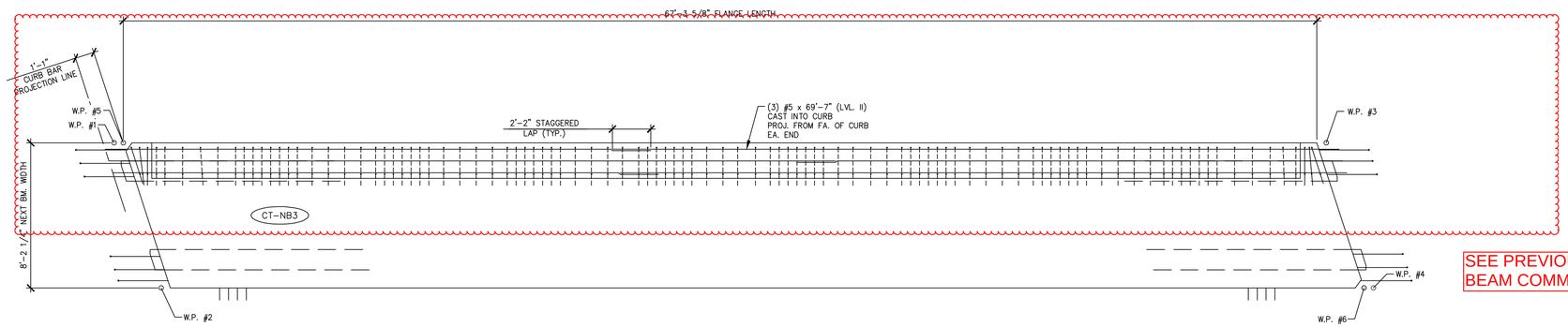


1
Revision 1 5.6.15

SEE PREVIOUS EXTERIOR BEAM COMMENTS.

2 NB4.2 REINFORCING PLAN VIEW FOR SECONDARY POUR

1/4" = 1'-0"

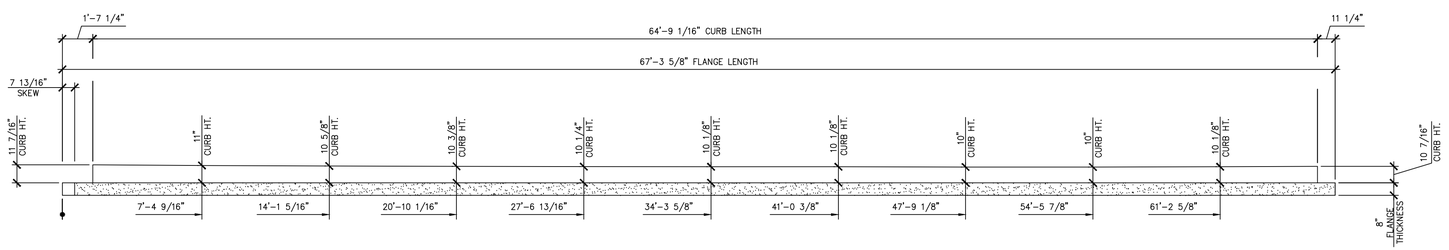


A NB4.2 CURB HEIGHT DETAIL

1/4" = 1'-0"

Vermont Agency of Transportation

2015-05-11_Castleton-BRF 015(10) RR.pdf

RECEIVED

ON: May 6, 2015

and Checked for

CONFORMANCE

BY: Jennifer Fitch DATE: 05/12/2015

**SHOP DRAWING REVIEW**

☐ REVIEWED AS REQUIRED BY THE CONSTRUCTION CONTRACT DOCUMENTS AND APPROVED, BUT ONLY FOR CONFORMANCE TO THE DESIGN CONCEPT OF THE WORK, AND SUBJECT TO FURTHER LIMITATIONS AND REQUIREMENTS CONTAINED IN THE CONSTRUCTION CONTRACT DOCUMENTS.

☐ REJECTED ☒ REVISE AND RESUBMIT ☐ FURNISH AS CORRECTED

CORRECTIONS OR COMMENTS MADE ON THE SHOP DRAWINGS DURING THIS REVIEW DO NOT RELIEVE CONTRACTOR FROM COMPLIANCE WITH REQUIRMENTS OF THE DRAWINGS AND SPECIFICATIONS. THIS CHECK IS ONLY FOR REVIEW OF GENERAL CONFORMANCE WITH THE DESIGN CONCEPT OF THE PROJECT AND GENERAL COMPLIANCE WITH THE INFORMATION GIVEN IN THE CONTRACT DOCUMENTS. THE CONTRACTOR IS RESPONSIBLE FOR: CONFIRMING AND CORRELATING ALL QUANTITIES AND DIMENSIONS; SELECTING FABRICATION PROCESSES AND TECHNIQUES OF CONSTRUCTION; COORDINATING HIS WORK WITH THAT OF ALL OTHER TRADES; AND PERFORMING HIS WORK IN A SAFE AND SATISFACTORY MANNER.

vhb
40 IDX Drive
Building 100, Suite 200
South Burlington, VT 05403
802.497.5100

Job Number: 57632.00
Reviewed By: E.F. LAWES
Date: May 11, 2015

J.P. CARRARA & SONS INC.
Precast & Prestress Manufacturer
2464 CASE STR., MIDDLEBURY, VERMONT 05753 Phone:(802)388-6361 Fax:(802)388-9010

SCHULTZ CONSTRUCTION
CONTRACTOR
BALLSTON SPA, NY

STATE OF VERMONT AGENCY OF TRANSPORTATION
COUNTY OF RUTLAND

DATE: MAY 06, 2015
SCALE: NOTED

TOWN OF CASTLETON
VT ROUTE 30 (RURAL MINOR ARTERIAL)
BRIDGE NO.: 93 PROJECT NO.: BRF 015-2(10)

CHKD: R.M. DFTM: PSS
JOB NO: 23456-015

PRESTRESSED NEXT BEAM DETAILS "CT-NB3"

DWG. NO: NB4.2

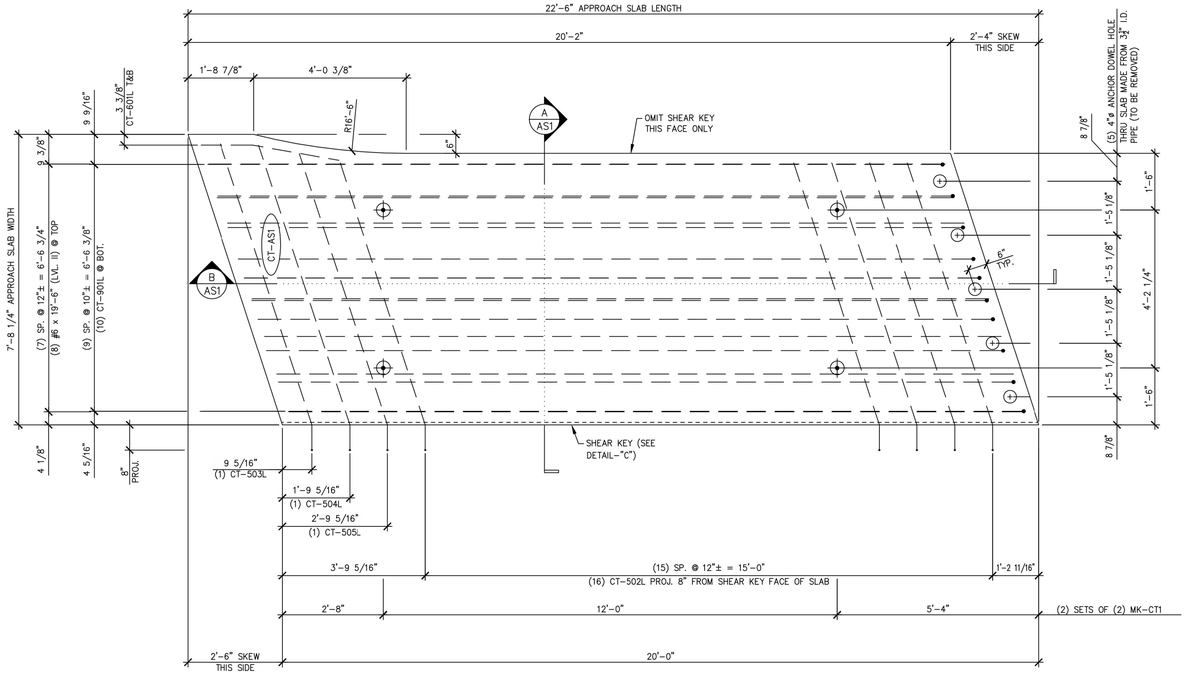


1 / AS1 APPROACH SLAB PLAN VIEW IN FORM
1/2" = 1'-0"

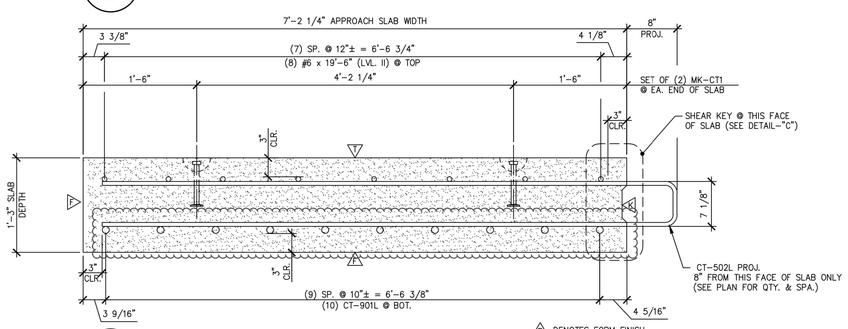


A / AS1 TRANSVERSE SECTION
1" = 1'-0"

△1 DENOTES FORM FINISH
△2 DENOTES FLOAT FINISH
△3 DENOTES ROUGHENED FINISH

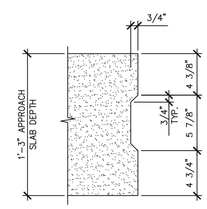


DETAIL – "C"
1 1/2" = 1'-0"

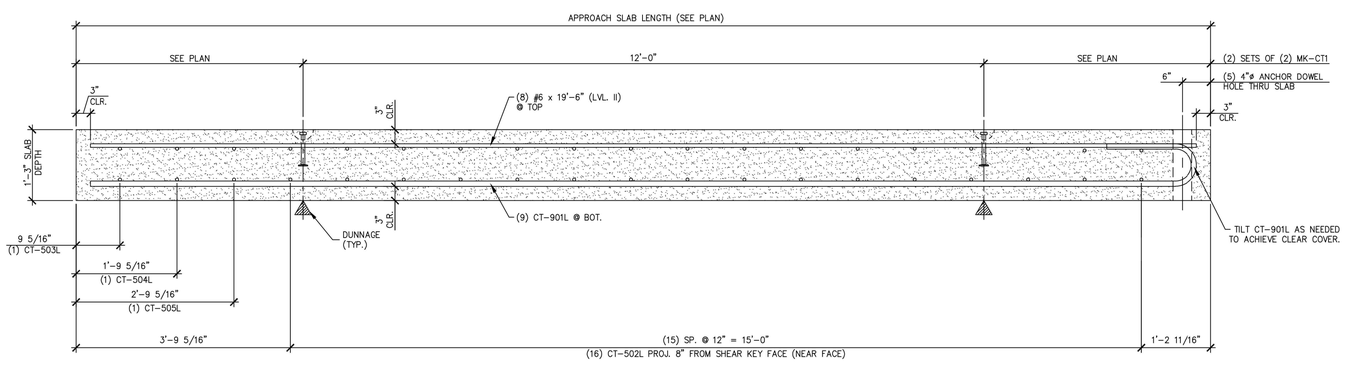


B / AS1 LONGITUDINAL SECTION
3/4" = 1'-0"

Revision 1 5.6.15

Vermont Agency of Transportation
2015-05-11_Castleton BRF-015(010) RR.pdf
RECEIVED
ON: May 6, 2015
and Checked for
CONFORMANCE
BY: Jennifer Fitch DATE: 05/12/2015

SHOP NOTE:
f'c = 4,000 PSI
f'ci = 3,500 PSI
MIX: #445MSCC

**SHOP DRAWING REVIEW**

☒ REVIEWED AS REQUIRED BY THE CONSTRUCTION CONTRACT DOCUMENTS AND APPROVED, BUT ONLY FOR CONFORMANCE TO THE DESIGN CONCEPT OF THE WORK, AND SUBJECT TO FURTHER LIMITATIONS AND REQUIREMENTS CONTAINED IN THE CONSTRUCTION CONTRACT DOCUMENTS.

☐ REJECTED ☐ REVISE AND RESUBMIT ☐ FURNISH AS CORRECTED

CORRECTIONS OR COMMENTS MADE ON THE SHOP DRAWINGS DURING THIS REVIEW DO NOT RELIEVE CONTRACTOR FROM COMPLIANCE WITH REQUIRMENTS OF THE DRAWINGS AND SPECIFICATIONS. THIS CHECK IS ONLY FOR REVIEW OF GENERAL CONFORMANCE WITH THE DESIGN CONCEPT OF THE PROJECT AND GENERAL COMPLIANCE WITH THE INFORMATION GIVEN IN THE CONTRACT DOCUMENTS. THE CONTRACTOR IS RESPONSIBLE FOR: CONFIRMING AND CORRELATING ALL QUANTITIES AND DIMENSIONS; SELECTING FABRICATION PROCESSES AND TECHNIQUES OF CONSTRUCTION; COORDINATING HIS WORK WITH THAT OF ALL OTHER TRADES; AND PERFORMING HIS WORK IN A SAFE AND SATISFACTORY MANNER.

vhb
40 IDX Drive
Building 100, Suite 200
South Burlington, VT 05403
802.497.6100

Job Number: 57632.00
Reviewed By: E.F. LAWES
Date: May 11, 2015

| MARK: CT-AS1 | QTY.: 1 | WT.: 13.62 ∓ | VOL.: 6.72 cy |
|---|---|---|---|

MATERIAL LIST / APPROACH SLAB

| ITEM | MARK | DESCRIPTION | QTY. CT-AS1 |
|---|---|---|---|
| 1 | CT-502L | #5 BENT BAR (LEVEL II, DUAL COATED) | 16 |
| 2 | CT-503L | #5 BENT BAR (LEVEL II, DUAL COATED) | 1 |
| 3 | CT-504L | #5 BENT BAR (LEVEL II, DUAL COATED) | 1 |
| 4 | CT-505L | #5 BENT BAR (LEVEL II, DUAL COATED) | 1 |
| 5 | CT-601L | #6 BENT BAR (LEVEL II, DUAL COATED) | 2 |
| 6 | CT-901L | #9 BENT BAR (LEVEL II, DUAL COATED) | 10 |
| 7 | | #6 x 19'-6" (LEVEL II, DUAL COATED) | 8 |
| 8 | MK-CT1 | 4T x 7 1/8" SWIFT LIFT LIFTER | 4 |
| 9 | | 4"ø x 1'-3" PVC SLEEVE | 5 |
| 10 | | | |

Revision 1 5.6.15

APPROVAL STAMP:

J.P. CARRARA & SONS INC.
Precast & Prestress Manufacturer
2464 CASE STR., MIDDLEBURY, VERMONT 05753 Phone:(802)388-6361 Fax:(802)388-9010

SCHULTZ CONSTRUCTION
CONTRACTOR
BALLSTON SPA, NY

STATE OF VERMONT AGENCY OF TRANSPORTATION
COUNTY OF RUTLAND

DATE: MAY 06, 2015
SCALE: NOTED

TOWN OF CASTLETON
VT ROUTE 30 (RURAL MINOR ARTERIAL)
BRIDGE NO.: 93 PROJECT NO.: BRF 015-2(10)

CHKD: R.M. DFTM: PSS
JOB NO: 23456-015

PRECAST APPROACH SLAB DETAILS "CT-AS1"

DWG. NO: AS1

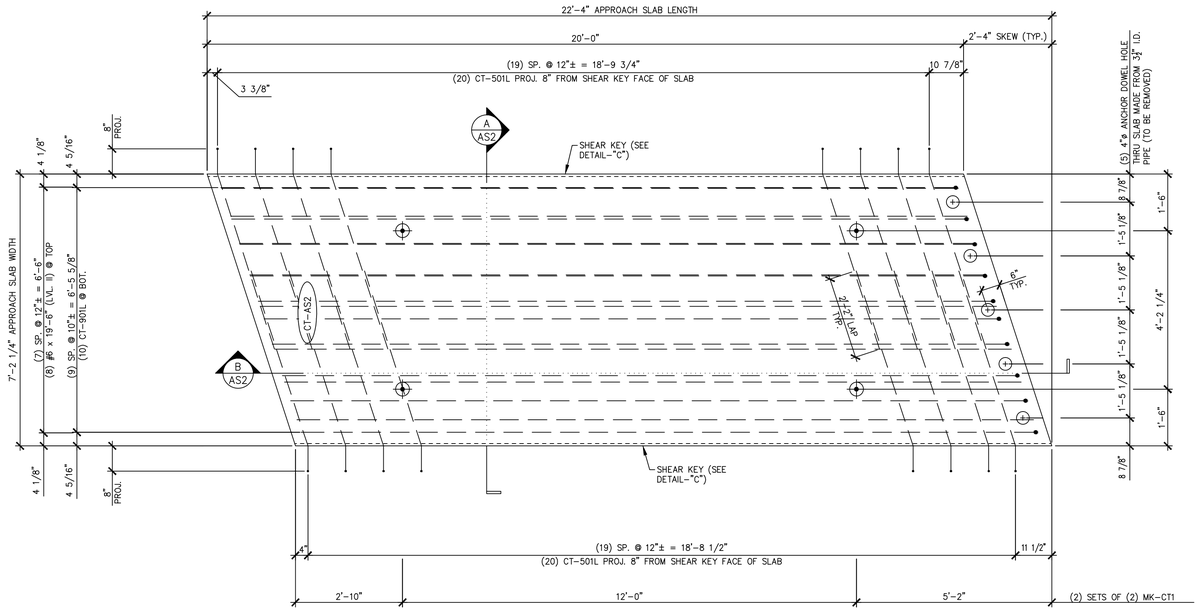


1 / AS2 APPROACH SLAB PLAN VIEW IN FORM

1/2" = 1'-0"

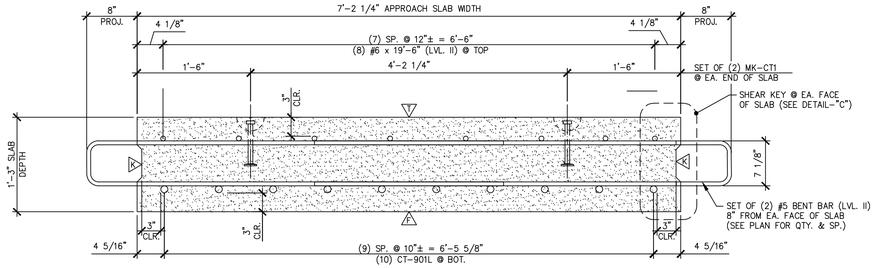


A / AS2 TRANSVERSE SECTION

1" = 1'-0"

△1 DENOTES FORM FINISH

△2 DENOTES FLOAT FINISH

△3 DENOTES ROUGHENED FINISH

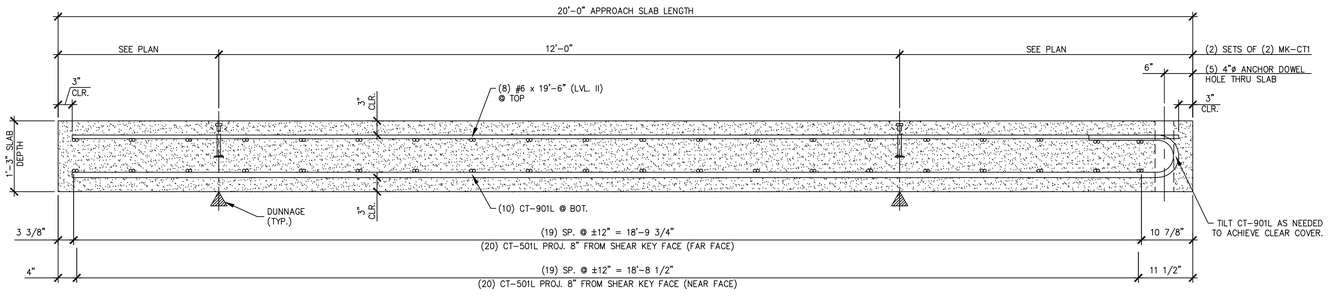


B / AS2 LONGITUDINAL SECTION

3/4" = 1'-0"

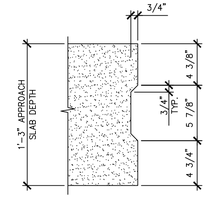


DETAIL – "C"

1 1/2" = 1'-0"

Vermont Agency of Transportation

2015-05-11_Castleton BRF 015(2)10 RR.pdf

RECEIVED

ON: May 6, 2015

and Checked for

CONFORMANCE

BY: Jennifer Fitch DATE: 05/12/2015

SHOP NOTE:
f'c = 4,000 PSI
f'ci = 3,500 PSI
MIX: #445MSCC

**SHOP DRAWING REVIEW**

☒ REVIEWED AS REQUIRED BY THE CONSTRUCTION CONTRACT DOCUMENTS AND APPROVED, BUT ONLY FOR CONFORMANCE TO THE DESIGN CONCEPT OF THE WORK, AND SUBJECT TO FURTHER LIMITATIONS AND REQUIREMENTS CONTAINED IN THE CONSTRUCTION CONTRACT DOCUMENTS.

☐ REJECTED ☐ REVISE AND RESUBMIT ☐ FURNISH AS CORRECTED

CORRECTIONS OR COMMENTS MADE ON THE SHOP DRAWINGS DURING THIS REVIEW DO NOT RELIEVE CONTRACTOR FROM COMPLIANCE WITH REQUIRMENTS OF THE DRAWINGS AND SPECIFICATIONS. THIS CHECK IS ONLY FOR REVIEW OF GENERAL CONFORMANCE WITH THE DESIGN CONCEPT OF THE PROJECT AND GENERAL COMPLIANCE WITH THE INFORMATION GIVEN IN THE CONTRACT DOCUMENTS. THE CONTRACTOR IS RESPONSIBLE FOR: CONFIRMING AND CORRELATING ALL QUANTITIES AND DIMENSIONS; SELECTING FABRICATION PROCESSES AND TECHNIQUES OF CONSTRUCTION; COORDINATING HIS WORK WITH THAT OF ALL OTHER TRADES; AND PERFORMING HIS WORK IN A SAFE AND SATISFACTORY MANNER.

vhb 40 IDX Drive, Building 100, Suite 200, South Burlington, VT 05403, 802.497.6100

Job Number: 57632.00
Reviewed By: E.F. LAWES
Date: May 11, 2015

| MARK: CT-AS2 | QTY.: 2 | WT.: 13.48 T | VOL.: 6.65 cy |
|---|---|---|---|

MATERIAL LIST / APPROACH SLAB

| ITEM | MARK | DESCRIPTION | QTY. CT-AS2 |
|---|---|---|---|
| 1 | CT-501L | #5 BENT BAR (LEVEL II, DUAL COATED) | 40 |
| 2 | | | |
| 3 | | | |
| 4 | CT-901L | #9 BENT BAR (LEVEL II, DUAL COATED) | 10 |
| 5 | | #6 x 19'-6" (LEVEL II, DUAL COATED) | 8 |
| 6 | | | |
| 7 | | | |
| 8 | MK-CT1 | 4T x 7 1/8" SWIFT LIFT LIFTER | 4 |
| 9 | | 4" O.D. x 1'-3" PVC SLEEVE | 5 |
| 10 | | | |

APPROVAL STAMP:

J.P. CARRARA & SONS INC.
Precast & Prestress Manufacturer
2464 CASE STR., MIDDLEBURY, VERMONT 05753 Phone:(802)388-6361 Fax:(802)388-9010

SCHULTZ CONSTRUCTION
CONTRACTOR
BALLSTON SPA, NY

STATE OF VERMONT AGENCY OF TRANSPORTATION
COUNTY OF RUTLAND

TOWN OF CASTLETON
VT ROUTE 30 (RURAL MINOR ARTERIAL)
BRIDGE NO.: 93 PROJECT NO.: BRF 015-2(10)

PRECAST APPROACH SLAB DETAILS "CT-AS2"

DATE: MAY 06, 2015
SCALE: NOTED
CHKD: R.M. DFTM: PSS
JOB NO: 23456-015
DWG. NO: AS2

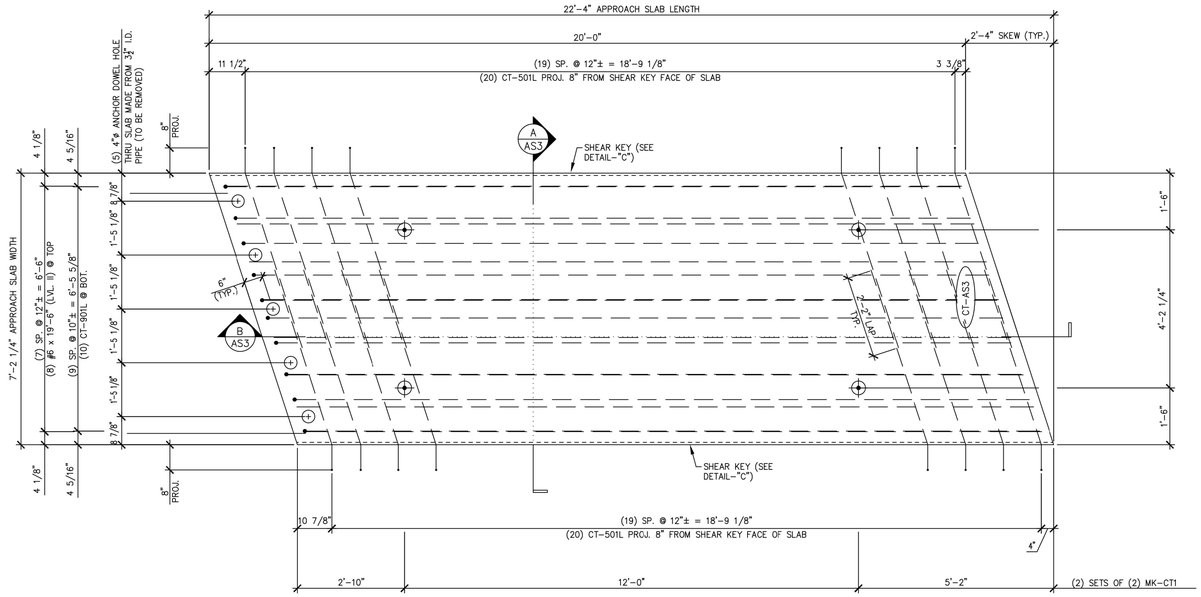


1 / AS3 APPROACH SLAB PLAN VIEW IN FORM

1/2" = 1'-0"

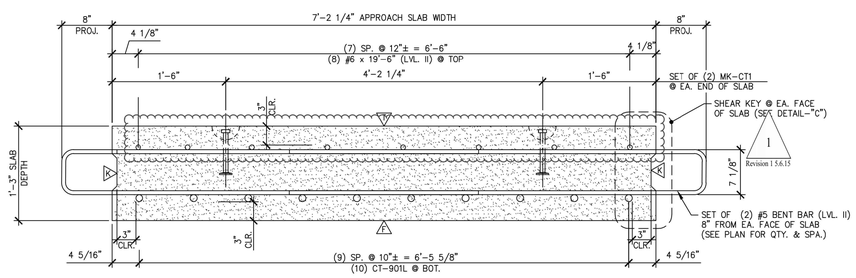


A / AS3 TRANSVERSE SECTION

1" = 1'-0"

△1 DENOTES FORM FINISH

△1 DENOTES FLOAT FINISH

△2 DENOTES ROUGHENED FINISH

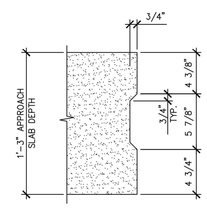


DETAIL – "C"

1 1/2" = 1'-0"

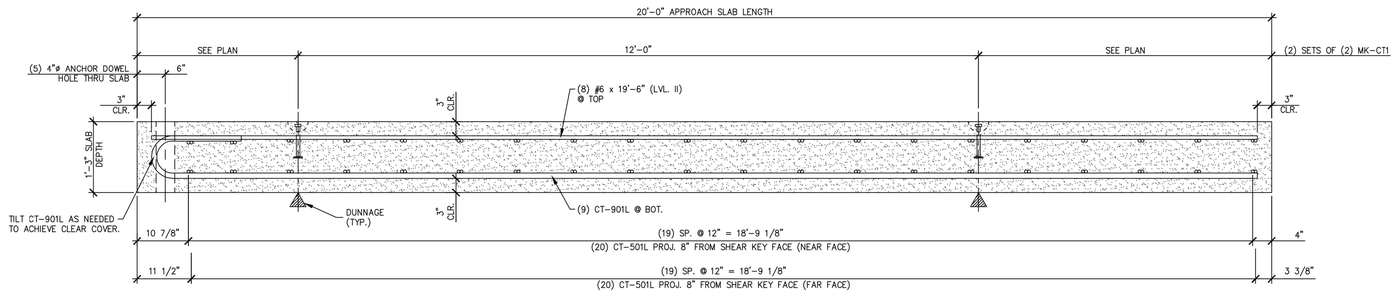


B / AS3 LONGITUDINAL SECTION

3/4" = 1'-0"

Vermont Agency of Transportation

2015-05-11_Castleton BRF 015(10) RR.pdf

RECEIVED

ON: May 6, 2015

and Checked for

CONFORMANCE

BY: Jennifer Fitch DATE: 05/12/2015

SHOP NOTE:
f'c = 4,000 PSI
f'ci = 3,500 PSI
MIX: #445MSCC

**SHOP DRAWING REVIEW**

☒ REVIEWED AS REQUIRED BY THE CONSTRUCTION CONTRACT DOCUMENTS AND APPROVED, BUT ONLY FOR CONFORMANCE TO THE DESIGN CONCEPT OF THE WORK, AND SUBJECT TO FURTHER LIMITATIONS AND REQUIREMENTS CONTAINED IN THE CONSTRUCTION CONTRACT DOCUMENTS.

☐ REJECTED ☐ REVISE AND RESUBMIT ☐ FURNISH AS CORRECTED

CORRECTIONS OR COMMENTS MADE ON THE SHOP DRAWINGS DURING THIS REVIEW DO NOT RELIEVE CONTRACTOR FROM COMPLIANCE WITH REQUIRMENTS OF THE DRAWINGS AND SPECIFICATIONS. THIS CHECK IS ONLY FOR REVIEW OF GENERAL CONFORMANCE WITH THE DESIGN CONCEPT OF THE PROJECT AND GENERAL COMPLIANCE WITH THE INFORMATION GIVEN IN THE CONTRACT DOCUMENTS. THE CONTRACTOR IS RESPONSIBLE FOR: CONFIRMING AND CORRELATING ALL QUANTITIES AND DIMENSIONS; SELECTING FABRICATION PROCESSES AND TECHNIQUES OF CONSTRUCTION; COORDINATING HIS WORK WITH THAT OF ALL OTHER TRADES; AND PERFORMING HIS WORK IN A SAFE AND SATISFACTORY MANNER.

vhb 40 IDX Drive, Building 100, Suite 200, South Burlington, VT 05403, 802.497.6100

Job Number: 57632.00
Reviewed By: E.F. LAWES
Date: May 11, 2015

| MARK: CT-AS3 | QTY.: 2 | WT.: 13.48 T | VOL.: 6.65 cy |
|---|---|---|---|

MATERIAL LIST / APPROACH SLAB

| ITEM | MARK | DESCRIPTION | QTY./SLAB CT-AS3 |
|---|---|---|---|
| 1 | CT-501L | #5 BENT BAR (LEVEL II, DUAL COATED) | 40 |
| 2 | | | |
| 3 | | | |
| 4 | CT-901L | #9 BENT BAR (LEVEL II, DUAL COATED) | 10 |
| 5 | | #6 x 19'-6" (LEVEL II, DUAL COATED) | 8 |
| 6 | | | |
| 7 | | | |
| 8 | MK-CT1 | 4T x 7 1/8" SWIFT LIFT LIFTER | 4 |
| 9 | | 4" O.D. x 1'-3" PVC SLEEVE | 5 |
| 10 | | | |

1 Revision 1 5.6.15

APPROVAL STAMP:

J.P. CARRARA & SONS INC.
Precast & Prestress Manufacturer
2464 CASE STR., MIDDLEBURY, VERMONT 05753 Phone:(802)388-6361 Fax:(802)388-9010

SCHULTZ CONSTRUCTION
CONTRACTOR
BALLSTON SPA, NY

STATE OF VERMONT AGENCY OF TRANSPORTATION
COUNTY OF RUTLAND

TOWN OF CASTLETON
VT ROUTE 30 (RURAL MINOR ARTERIAL)
BRIDGE NO.: 93 PROJECT NO.: BRF 015-2(10)

PRECAST APPROACH SLAB DETAILS "CT-AS3"

DATE: MAY 06, 2015
SCALE: NOTED
CHKD: R.M. DFTM: PSS
JOB NO: 23456-015
DWG. NO: AS3

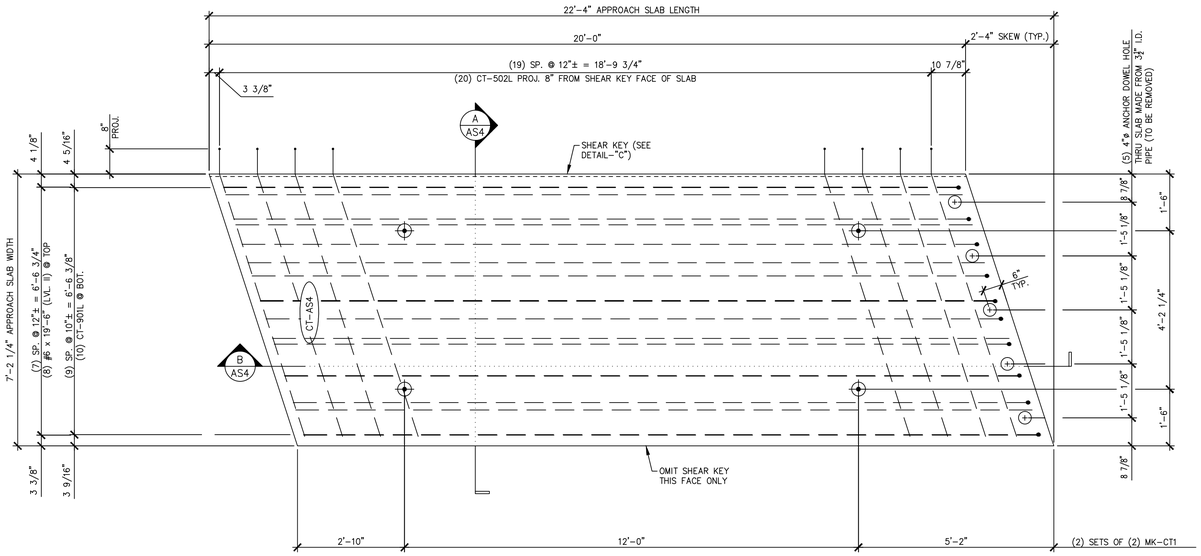


1 / AS4 APPROACH SLAB PLAN VIEW IN FORM

1/2" = 1'-0"

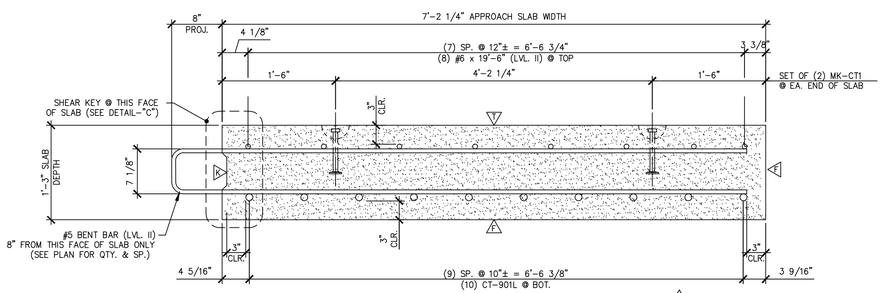


A / AS4 TRANSVERSE SECTION

1" = 1'-0"

F DENOTES FORM FINISH

T DENOTES FLOAT FINISH

R DENOTES ROUGHENED FINISH

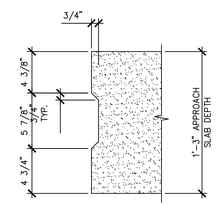


DETAIL – "C"

1 1/2" = 1'-0"

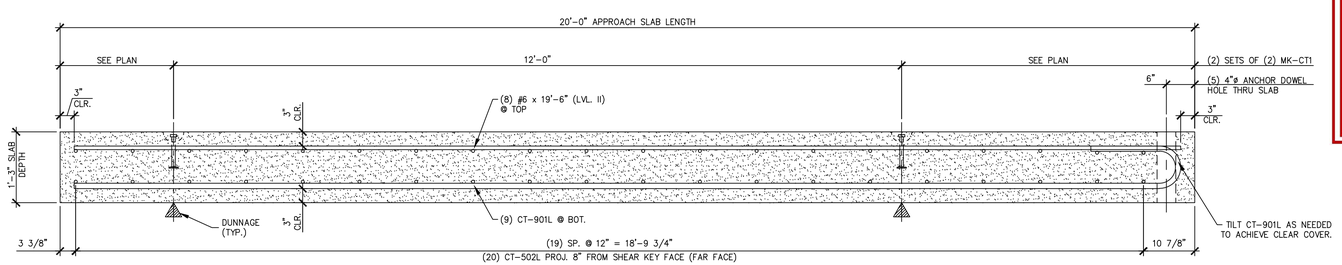


B / AS4 LONGITUDINAL SECTION

3/4" = 1'-0"

Vermont Agency of Transportation

2015-05-11_Castleton BRF 015(10) RR.pdf

RECEIVED

ON: May 6, 2015

and Checked for

CONFORMANCE

BY: Jennifer Fitch DATE: 05/12/2015

SHOP NOTE:
f'c = 4,000 PSI
f'ci = 3,500 PSI
MIX: #44SMSCC

**SHOP DRAWING REVIEW**

X REVIEWED AS REQUIRED BY THE CONSTRUCTION CONTRACT DOCUMENTS AND APPROVED, BUT ONLY FOR CONFORMANCE TO THE DESIGN CONCEPT OF THE WORK, AND SUBJECT TO FURTHER LIMITATIONS AND REQUIREMENTS CONTAINED IN THE CONSTRUCTION CONTRACT DOCUMENTS.

☐ REJECTED ☐ REVISE AND RESUBMIT ☐ FURNISH AS CORRECTED

CORRECTIONS OR COMMENTS MADE ON THE SHOP DRAWINGS DURING THIS REVIEW DO NOT RELIEVE CONTRACTOR FROM COMPLIANCE WITH REQUIREMENTS OF THE DRAWINGS AND SPECIFICATIONS. THIS CHECK IS ONLY FOR REVIEW OF GENERAL CONFORMANCE WITH THE DESIGN CONCEPT OF THE PROJECT AND GENERAL COMPLIANCE WITH THE INFORMATION GIVEN IN THE CONTRACT DOCUMENTS. THE CONTRACTOR IS RESPONSIBLE FOR: CONFIRMING AND CORRELATING ALL QUANTITIES AND DIMENSIONS; SELECTING FABRICATION PROCESSES AND TECHNIQUES OF CONSTRUCTION; COORDINATING HIS WORK WITH THAT OF ALL OTHER TRADES; AND PERFORMING HIS WORK IN A SAFE AND SATISFACTORY MANNER.

vhb 40 IDX Drive, Building 100, Suite 200, South Burlington, VT 05403, 802.497.6100

Job Number: 57632.00
Reviewed By: E.F. LAWES
Date: May 11, 2015

| MARK: CT-AS4 | QTY.: 2 | WT.: 13.48 T | VOL.: 6.65 cy |
|---|---|---|---|

MATERIAL LIST / APPROACH SLAB

| ITEM | MARK | DESCRIPTION | QTY. CT-AS4 |
|---|---|---|---|
| 1 | CT-502L | #5 BENT BAR (LEVEL II, DUAL COATED) | 20 |
| 2 | | | |
| 3 | | | |
| 4 | CT-901L | #9 BENT BAR (LEVEL II, DUAL COATED) | 10 |
| 5 | | #6 x 19'-6" (LEVEL II, DUAL COATED) | 8 |
| 6 | | | |
| 7 | | | |
| 8 | MK-CT1 | 4T x 7 1/8" SWFT LIFT LIFTER | 4 |
| 9 | | 4" O.D. x 1'-3" PVC SLEEVE | 5 |
| 10 | | | |

APPROVAL STAMP:

J.P. CARRARA & SONS INC.
Precast & Prestress Manufacturer
2464 CASE STR., MIDDLEBURY, VERMONT 05753 Phone:(802)388-6361 Fax:(802)388-9010

SCHULTZ CONSTRUCTION
CONTRACTOR
BALLSTON SPA, NY

STATE OF VERMONT AGENCY OF TRANSPORTATION
COUNTY OF RUTLAND

DATE: MAY 06, 2015
SCALE: NOTED

TOWN OF CASTLETON
VT ROUTE 30 (RURAL MINOR ARTERIAL)
BRIDGE NO.: 93 PROJECT NO.: BRF 015-2(10)

CHKD: R.M. DFTM: PSS
JOB NO: 23456-015

PRECAST APPROACH SLAB DETAILS "CT-AS4"

DWG. NO: AS4

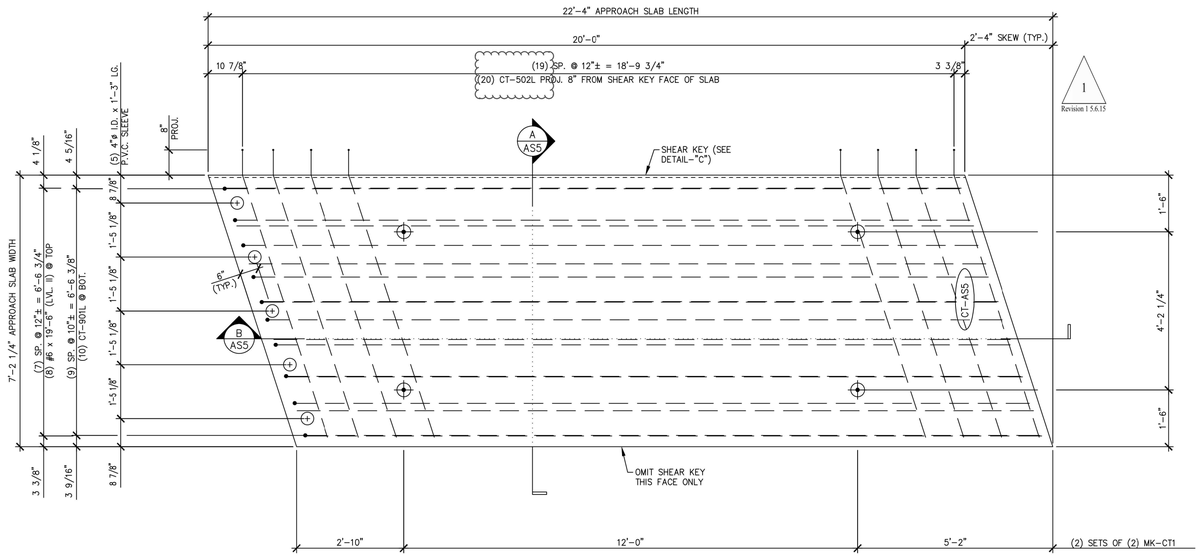


1 / AS5 APPROACH SLAB PLAN VIEW IN FORM

1/2" = 1'-0"

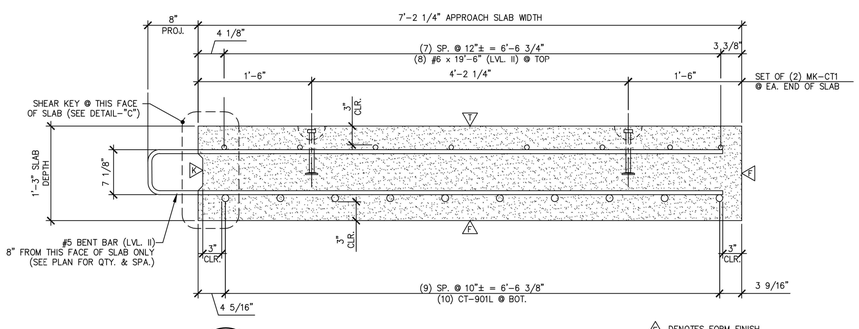


A / AS5 TRANSVERSE SECTION

1" = 1'-0"

△A DENOTES FORM FINISH

△1 DENOTES FLOAT FINISH

△R DENOTES ROUGHENED FINISH

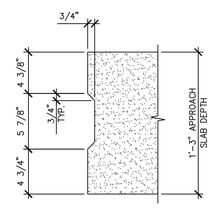


DETAIL – "C"

1 1/2" = 1'-0"

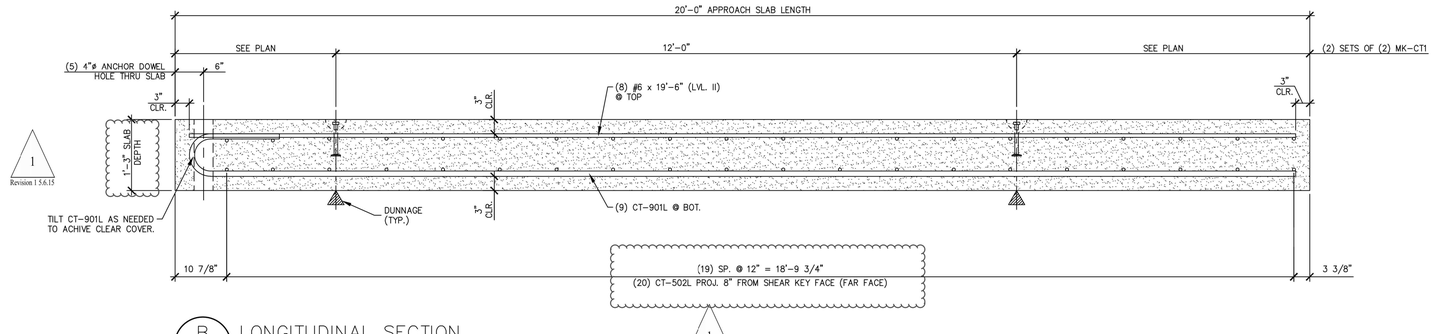


B / AS5 LONGITUDINAL SECTION

3/4" = 1'-0"

Vermont Agency of Transportation

2015-05-11_Contract BRF 015(10) RR.pdf

RECEIVED

ON: May 6, 2015

and Checked for

CONFORMANCE

BY: Jennifer Fitch DATE: 05/12/2015

SHOP NOTE:
f'c = 4,000 PSI
f'ci = 3,500 PSI
MIX: #445MSCC

**SHOP DRAWING REVIEW**

☒ REVIEWED AS REQUIRED BY THE CONSTRUCTION CONTRACT DOCUMENTS AND APPROVED, BUT ONLY FOR CONFORMANCE TO THE DESIGN CONCEPT OF THE WORK, AND SUBJECT TO FURTHER LIMITATIONS AND REQUIREMENTS CONTAINED IN THE CONSTRUCTION CONTRACT DOCUMENTS.

☐ REJECTED ☐ REVISE AND RESUBMIT ☐ FURNISH AS CORRECTED

CORRECTIONS OR COMMENTS MADE ON THE SHOP DRAWINGS DURING THIS REVIEW DO NOT RELIEVE CONTRACTOR FROM COMPLIANCE WITH REQUIRMENTS OF THE DRAWINGS AND SPECIFICATIONS. THIS CHECK IS ONLY FOR REVIEW OF GENERAL CONFORMANCE WITH THE DESIGN CONCEPT OF THE PROJECT AND GENERAL COMPLIANCE WITH THE INFORMATION GIVEN IN THE CONTRACT DOCUMENTS. THE CONTRACTOR IS RESPONSIBLE FOR: CONFIRMING AND CORRELATING ALL QUANTITIES AND DIMENSIONS; SELECTING FABRICATION PROCESSES AND TECHNIQUES OF CONSTRUCTION; COORDINATING HIS WORK WITH THAT OF ALL OTHER TRADES; AND PERFORMING HIS WORK IN A SAFE AND SATISFACTORY MANNER.

vhb
40 IDX Drive
Building 100, Suite 200
South Burlington, VT 05403
802.497.6100

Job Number: 57632.00
Reviewed By: E.F. LAWES
Date: May 11, 2015

1
Revision 1 5.6.15

| MARK: CT–AS5 | QTY.: 1 | WT.: 13.48 T | VOL.: 6.65 cy |
|---|---|---|---|

MATERIAL LIST / APPROACH SLAB

| ITEM | MARK | DESCRIPTION | QTY. CT–AS5 |
|---|---|---|---|
| 1 | CT–502L | #5 BENT BAR (LEVEL II, DUAL COATED) | 20 |
| 2 | | | |
| 3 | | | |
| 4 | CT–901L | #9 BENT BAR (LEVEL II, DUAL COATED) | 10 |
| 5 | | #6 x 19'–6" (LEVEL II, DUAL COATED) | 8 |
| 6 | | | |
| 7 | | | |
| 8 | MK–CT1 | 4T x 7 1/8" SWIFT LIFT LIFTER | 4 |
| 9 | | 4" O.D. x 1'–3" PVC SLEEVE | 5 |
| 10 | | | |

APPROVAL STAMP:

J.P. CARRARA & SONS INC.
Precast & Prestress Manufacturer
2464 CASE STR., MIDDLEBURY, VERMONT 05753 Phone:(802)388–6361 Fax:(802)388–9010

SCHULTZ CONSTRUCTION
CONTRACTOR
BALLSTON SPA, NY

STATE OF VERMONT AGENCY OF TRANSPORTATION
COUNTY OF RUTLAND

TOWN OF CASTLETON
VT ROUTE 30 (RURAL MINOR ARTERIAL)
BRIDGE NO.: 93 PROJECT NO.: BRF 015–2(10)

PRECAST APPROACH SLAB DETAILS

DATE: MAY 06, 2015
SCALE: NOTED
CHKD: R.M. DFTM: PSS
JOB NO: 23456–015
DWG. NO: AS5

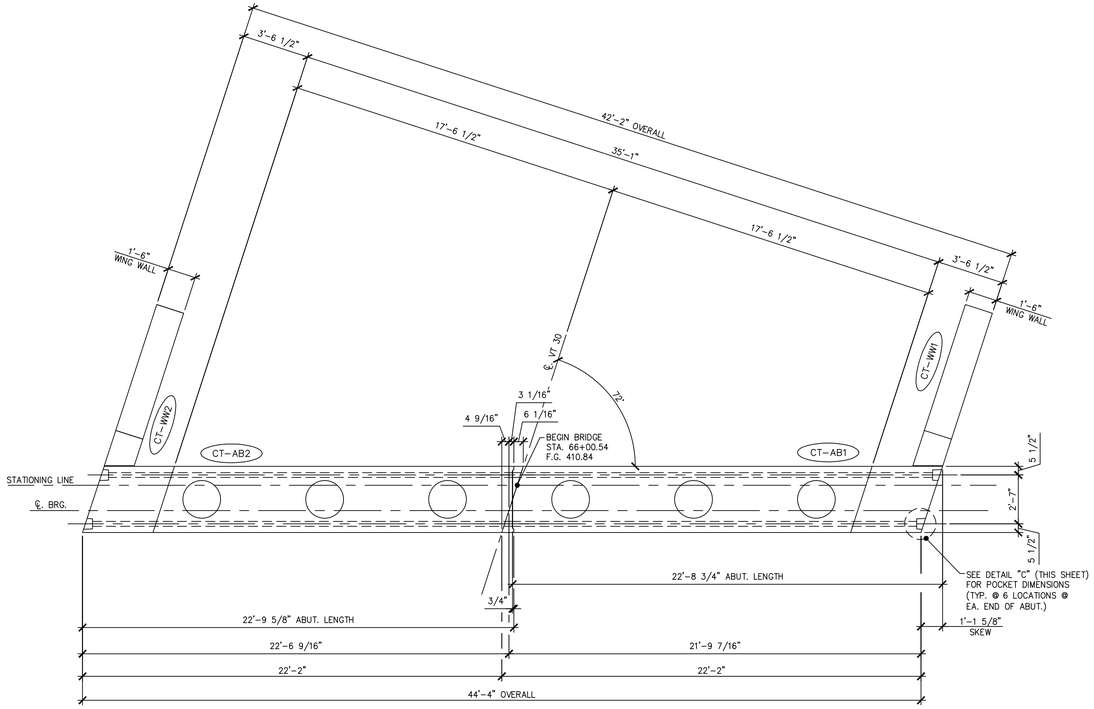


1 / AB1 ABUTMENT #1 ASSEMBLY PLAN

1/4" = 1'-0"

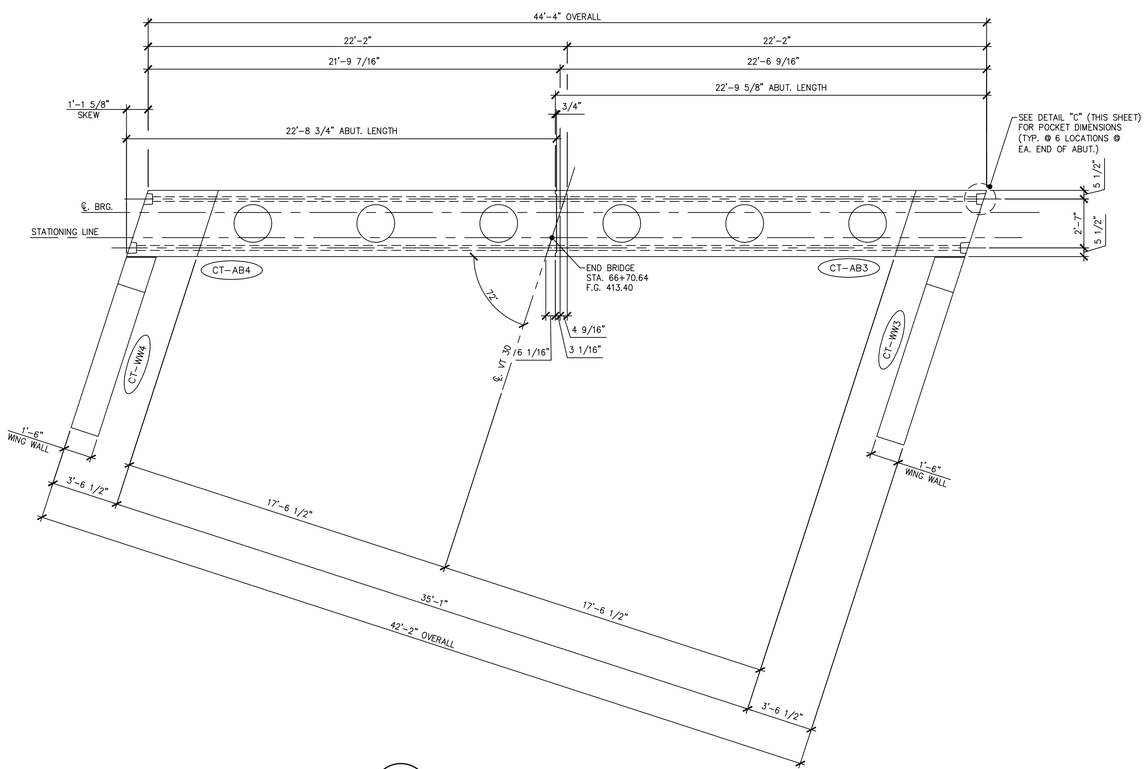


2 / AB1 ABUTMENT #2 ASSEMBLY PLAN

1/4" = 1'-0"

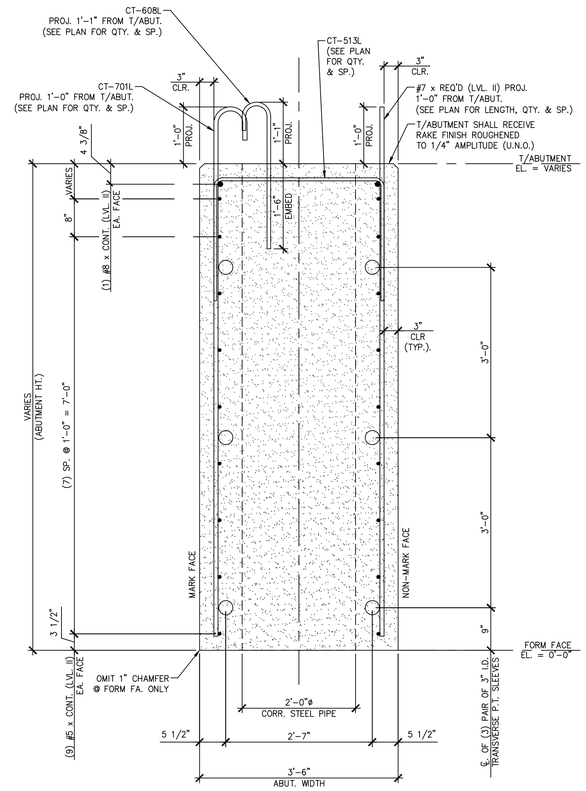


A / AB1 ABUTMENT SECTION

3/4" = 1'-0"

SHOP NOTE:
ALL EDGES OF ABUTMENT SHALL RECEIVE A 1" CHAMFER (U.N.O.)

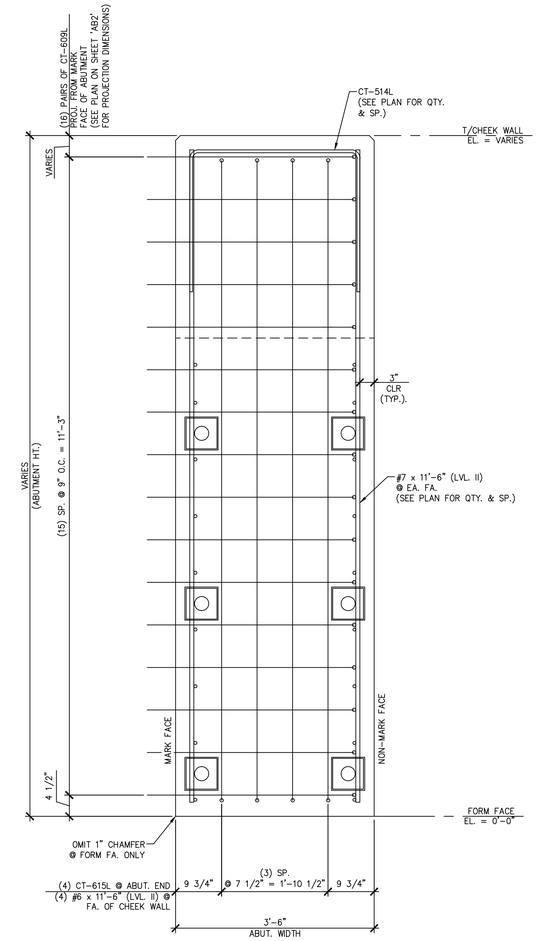


B / AB1 ABUTMENT SECTION

3/4" = 1'-0"

SHOP NOTE:
ALL EDGES OF ABUTMENT SHALL RECEIVE A 1" CHAMFER (U.N.O.)

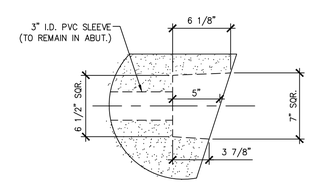


DETAIL – "C"

1 1/2" = 1'-0"

Vermont Agency of Transportation

2015-05-11_Castleton BRF 015(10) RR.pdf

RECEIVED

ON: May 6, 2015

and Checked for

CONFORMANCE

BY: Jennifer Fitch DATE: 05/12/2015

**SHOP DRAWING REVIEW**

☒ REVIEWED AS REQUIRED BY THE CONSTRUCTION CONTRACT DOCUMENTS AND APPROVED, BUT ONLY FOR CONFORMANCE TO THE DESIGN CONCEPT OF THE WORK, AND SUBJECT TO FURTHER LIMITATIONS AND REQUIREMENTS CONTAINED IN THE CONSTRUCTION CONTRACT DOCUMENTS.

☐ REJECTED ☐ REVISE AND RESUBMIT ☐ FURNISH AS CORRECTED

CORRECTIONS OR COMMENTS MADE ON THE SHOP DRAWINGS DURING THIS REVIEW DO NOT RELIEVE CONTRACTOR FROM COMPLIANCE WITH REQUIRMENTS OF THE DRAWINGS AND SPECIFICATIONS. THIS CHECK IS ONLY FOR REVIEW OF GENERAL CONFORMANCE WITH THE DESIGN CONCEPT OF THE PROJECT AND GENERAL COMPLIANCE WITH THE INFORMATION GIVEN IN THE CONTRACT DOCUMENTS. THE CONTRACTOR IS RESPONSIBLE FOR: CONFIRMING AND CORRELATING ALL QUANTITIES AND DIMENSIONS; SELECTING FABRICATION PROCESSES AND TECHNIQUES OF CONSTRUCTION; COORDINATING HIS WORK WITH THAT OF ALL OTHER TRADES; AND PERFORMING HIS WORK IN A SAFE AND SATISFACTORY MANNER.

vhb
40 IDX Drive
Building 100, Suite 200
South Burlington, VT 05403
802.497.6100

Job Number: 57632.00
Reviewed By: E.F. LAWES
Date: May 11, 2015

J.P. CARRARA & SONS INC.
Precast & Prestress Manufacturer
2464 CASE STR., MIDDLEBURY, VERMONT 05753 Phone:(802)388-6361 Fax:(802)388-9010

SCHULTZ CONSTRUCTION
CONTRACTOR
BALLSTON SPA, NY

STATE OF VERMONT AGENCY OF TRANSPORTATION
COUNTY OF RUTLAND

TOWN OF CASTLETON
VT ROUTE 30 (RURAL MINOR ARTERIAL)
BRIDGE NO.: 93 PROJECT NO.: BRF 015-2(10)

PRECAST ABUTMENT
PLAN, SECTION & DETAILS

| | |
|---|---|
| DATE: | MAY 06, 2015 |
| SCALE: | NOTED |
| CHKD: R.M. | DFTM: PSS |
| JOB NO: | 23456-015 |
| DWG. NO: | AB1 |

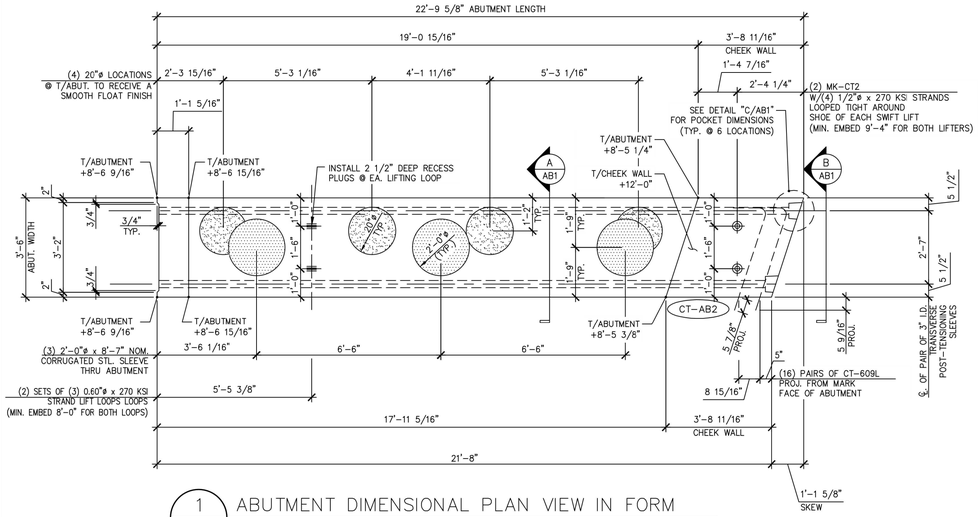


1 / AB2 ABUTMENT DIMENSIONAL PLAN VIEW IN FORM

3/8" = 1'-0"

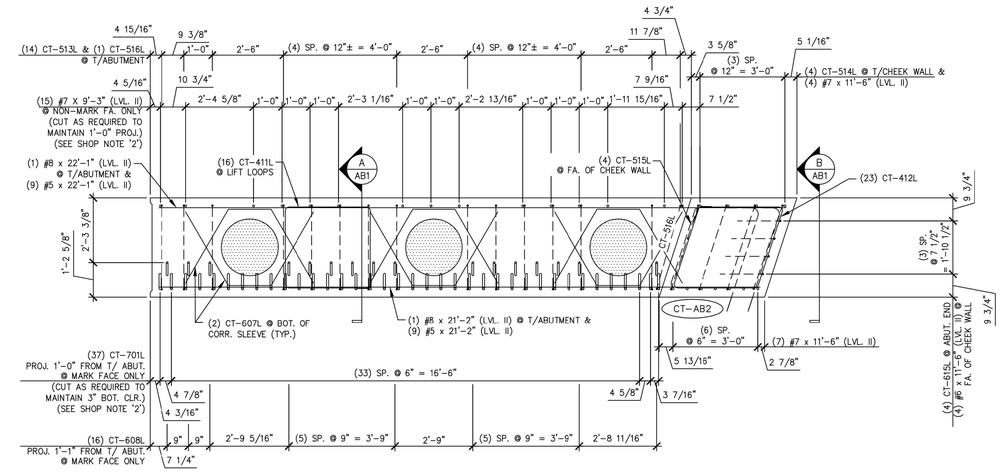


3 / AB2 ABUTMENT REINFORCING PLAN VIEW IN FORM

3/8" = 1'-0"

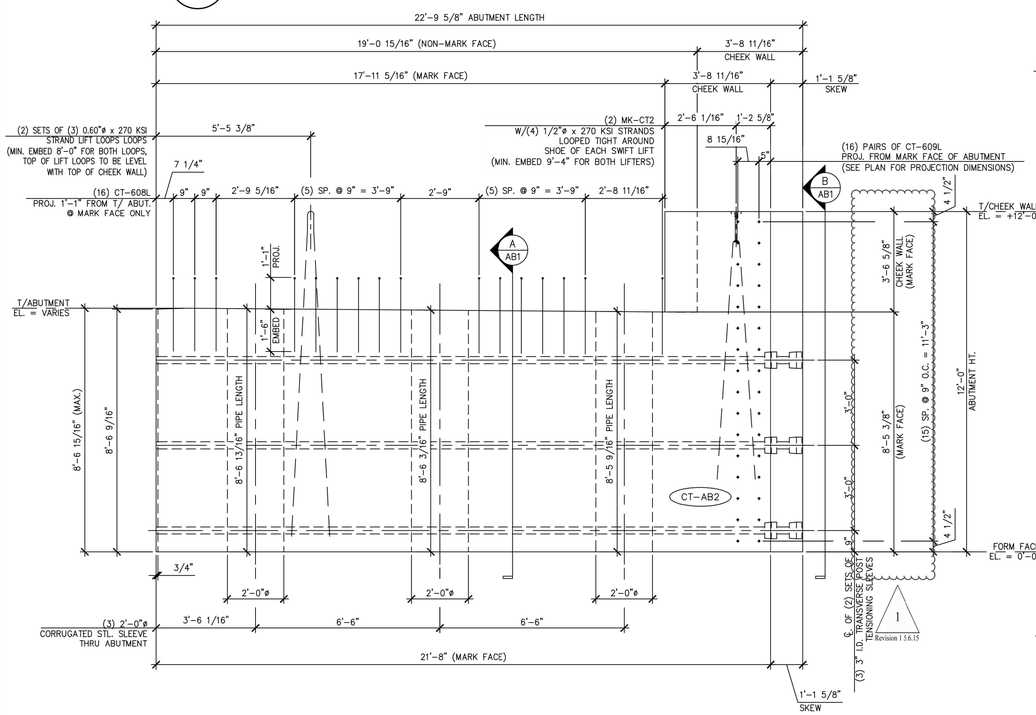


2 / AB2 ABUTMENT DIMENSIONAL MARK FACE ELEVATION

3/8" = 1'-0"

(ONLY CT-608L PROJECTING BARS SHOWN.
ALL OTHER PROJECTING BARS ARE NOT SHOWN HERE FOR CLARITY.
SEE DETAILS "A/AB1" AND "4/AB2" FOR ADDITIONAL PROJECTING BARS)

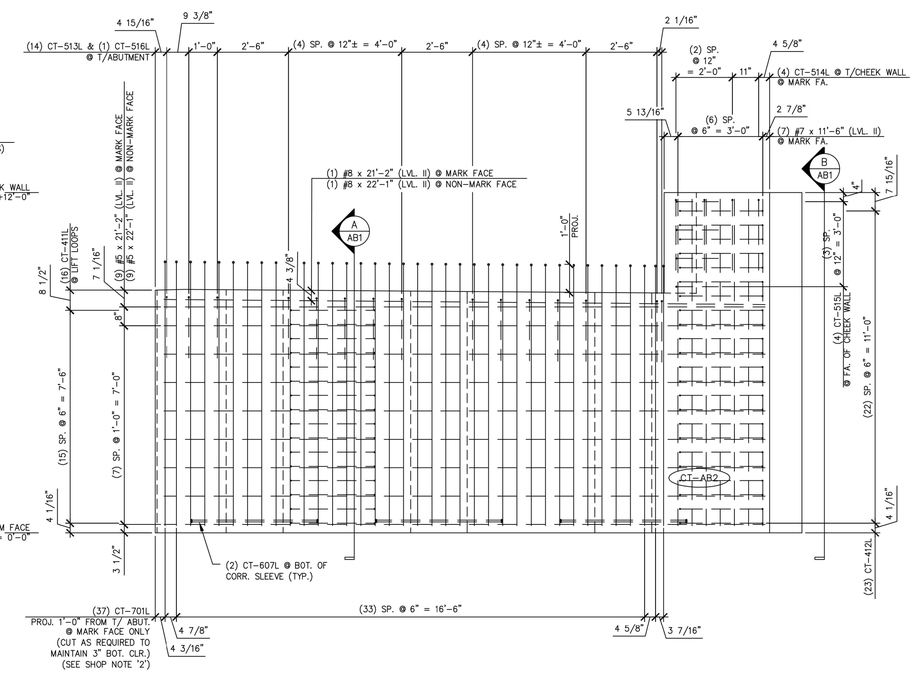


4 / AB2 ABUTMENT REINFORCING MARK FACE ELEVATION

3/8" = 1'-0"

(ONLY #7 PROJECTING BARS (LVL. II) SHOWN.
ALL OTHER PROJECTING BARS ARE NOT SHOWN HERE FOR CLARITY.
SEE DETAILS "A/AB1" AND "2/AB2" FOR ADDITIONAL PROJECTING BARS)

1 Revision 1 5.6.15

SHOP NOTE:
f'c = 5,000 PSI
f'ci = 5,000 PSI
MIX: #425M-NO DCI

SHOP NOTES:
1. ALL EDGES OF ABUTMENT SHALL RECEIVE A 1" CHAMFER (U.N.O.)
2. ENDS OF CUT BARS SHALL BE COATED WITH TOUCH UP PRODUCT SUPPLIED BY THE REBAR MANUFACTURER.

| MARK: CT-AB2 | QTY.: 1 | WT.: 46.94 T | VOL.: 23.18 cy |
|---|---|---|---|

MATERIAL LIST / ABUTMENT

| ITEM | MARK | DESCRIPTION | QTY. |
|---|---|---|---|
| 1 | CT-701L | #7 BENT BAR (LEVEL II, DUAL COATED) | 37 |
| 2 | CT-607L | #6 BENT BAR (LEVEL II, DUAL COATED) | 6 |
| 3 | CT-608L | #6 BENT BAR (LEVEL II, DUAL COATED) | 16 |
| 4 | CT-609L | #6 BENT BAR (LEVEL II, DUAL COATED) | 32 |
| 5 | CT-615L | #6 BENT BAR (LEVEL II, DUAL COATED) | 4 |
| 6 | CT-513L | #5 BENT BAR (LEVEL II, DUAL COATED) | 14 |
| 7 | CT-514L | #5 BENT BAR (LEVEL II, DUAL COATED) | 4 |
| 8 | CT-515L | #5 BENT BAR (LEVEL II, DUAL COATED) | 4 |
| 9 | CT-516L | #5 BENT BAR (LEVEL II, DUAL COATED) | 1 |
| 10 | CT-411L | #4 BENT BAR (LEVEL II, DUAL COATED) | 16 |
| 11 | CT-412L | #4 BENT BAR (LEVEL II, DUAL COATED) | 23 |
| 12 | | | |
| 13 | | #8 x 22'-1" (LEVEL II, DUAL COATED) | 1 |
| 14 | | #8 x 21'-2" (LEVEL II, DUAL COATED) | 1 |
| 15 | | #7 x 11'-6" (LEVEL II, DUAL COATED) | 11 |
| 16 | | #7 x 9'-3" (LEVEL II, DUAL COATED) | 15 |
| 17 | | #6 x 11'-6" (LEVEL II, DUAL COATED) | 4 |
| 18 | | #5 x 22'-1" (LEVEL II, DUAL COATED) | 9 |
| 19 | | #5 x 21'-2" (LEVEL II, DUAL COATED) | 9 |
| 20 | | 2'-0" ø x 8'-5 9/16" CORRUGATED STEEL PIPE (GALV.) | 1 |
| 21 | | 2'-0" ø x 8'-6 3/16" CORRUGATED STEEL PIPE (GALV.) | 1 |
| 22 | | 2'-0" ø x 8'-6 13/16" CORRUGATED STEEL PIPE (GALV.) | 1 |
| 23 | | | |
| 24 | MK-CT2 | 20T x 19 3/4" SWIFT LIFT LIFTER | 2 |
| 25 | | SET OF (3) 0.60"ø STRAND LIFTING LOOPS | 2 |
| 26 | | SET OF (4) 1/2"ø STRANDS | 2 |

Vermont Agency of Transportation
2015-05-11_Cauldwell BRF 015(210) RR.pdf

RECEIVED
ON: May 6, 2015
and Checked for
CONFORMANCE
BY: Jennifer Fitch DATE: 05/12/2015

SHOP DRAWING REVIEW

X REVIEWED AS REQUIRED BY THE CONSTRUCTION CONTRACT DOCUMENTS AND APPROVED, BUT ONLY FOR CONFORMANCE TO THE DESIGN CONCEPT OF THE WORK, AND SUBJECT TO FURTHER LIMITATIONS AND REQUIREMENTS CONTAINED IN THE CONSTRUCTION CONTRACT DOCUMENTS.

☐ REJECTED ☐ REVISE AND RESUBMIT ☐ FURNISH AS CORRECTED

CORRECTIONS OR COMMENTS MADE ON THE SHOP DRAWINGS DURING THIS REVIEW DO NOT RELIEVE CONTRACTOR FROM COMPLIANCE WITH REQUIREMENTS OF THE DRAWINGS AND SPECIFICATIONS. THIS CHECK IS ONLY FOR REVIEW OF GENERAL CONFORMANCE WITH THE DESIGN CONCEPT OF THE PROJECT AND GENERAL COMPLIANCE WITH THE INFORMATION GIVEN IN THE CONTRACT DOCUMENTS. THE CONTRACTOR IS RESPONSIBLE FOR: CONFIRMING AND CORRELATING ALL QUANTITIES AND DIMENSIONS; SELECTING FABRICATION PROCESSES AND TECHNIQUES OF CONSTRUCTION; COORDINATING HIS WORK WITH THAT OF ALL OTHER TRADES; AND PERFORMING HIS WORK IN A SAFE AND SATISFACTORY MANNER.

vhb
40 IDX Drive
Building 100, Suite 200
South Burlington, VT 05403
802.497.6100

Job Number: 57632.00
Reviewed By: E.F. LAWES
Date: May 11, 2015

J.P. CARRARA & SONS INC.
Precast & Prestress Manufacturer
2464 CASE STR., MIDDLEBURY, VERMONT 05753 Phone:(802)388-6361 Fax:(802)388-9010

SCHULTZ CONSTRUCTION
CONTRACTOR
BALLSTON SPA, NY

STATE OF VERMONT AGENCY OF TRANSPORTATION
COUNTY OF RUTLAND

TOWN OF CASTLETON
VT ROUTE 30 (RURAL MINOR ARTERIAL)
BRIDGE NO.: 93 PROJECT NO.: BRF 015-2(10)

PRECAST ABUTMENT DETAILS "CT-AB2"

DATE: MAY 06, 2015
SCALE: NOTED
CHKD: R.M. DFTM: PSS
JOB NO: 23456-015
DWG. NO: AB2

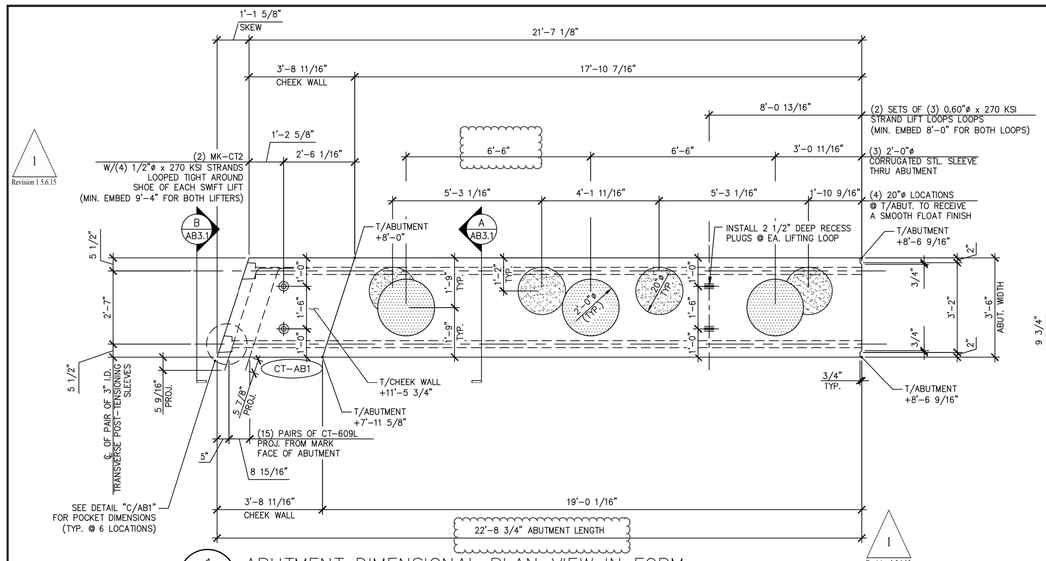


1 AB3 ABUTMENT DIMENSIONAL PLAN VIEW IN FORM

3/8" = 1'-0"

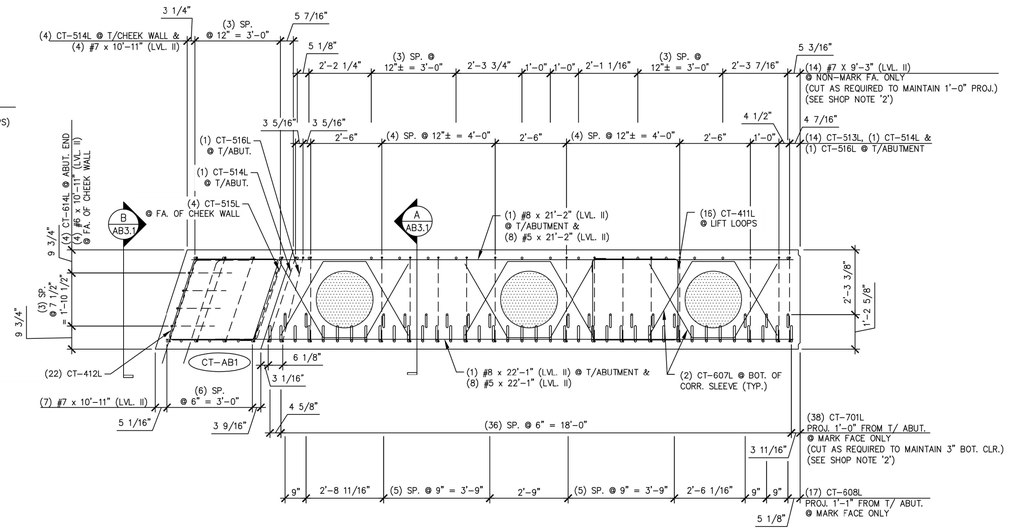


3 AB3 ABUTMENT REINFORCING PLAN VIEW IN FORM

3/8" = 1'-0"

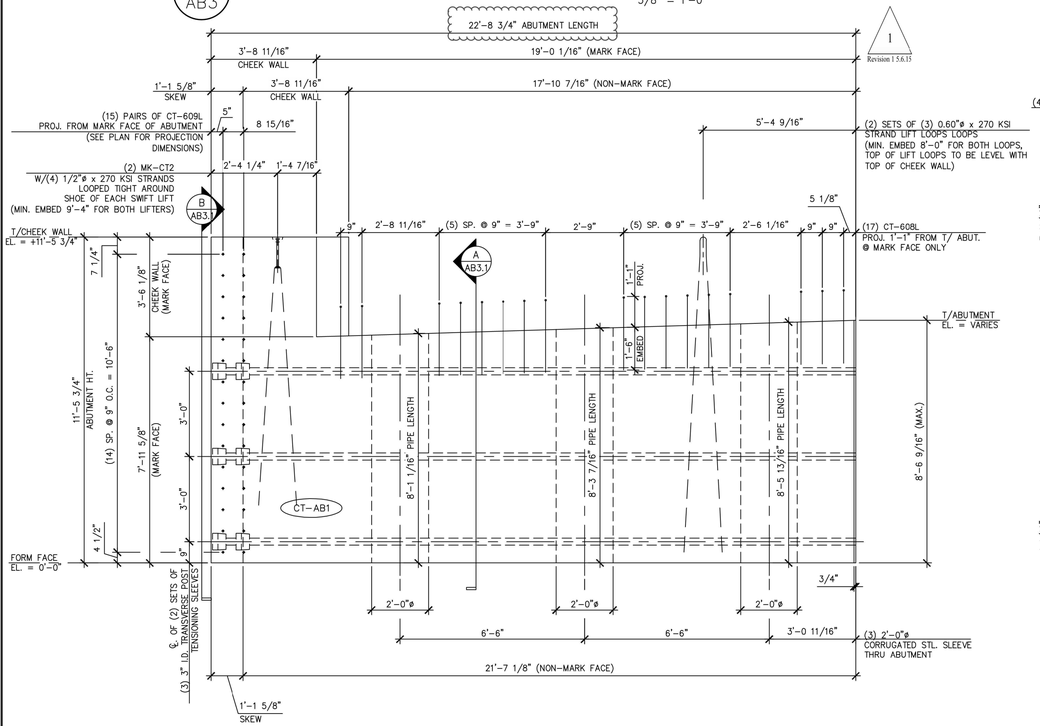


2 AB3 ABUTMENT DIMENSIONAL MARK FACE ELEVATION

(ONLY CT-608L PROJECTING BARS SHOWN.
ALL OTHER PROJECTING BARS ARE NOT SHOWN HERE FOR CLARITY.
SEE DETAILS "A/AB3.1" AND "4/AB3" FOR ADDITIONAL PROJECTING BARS)

3/8" = 1'-0"

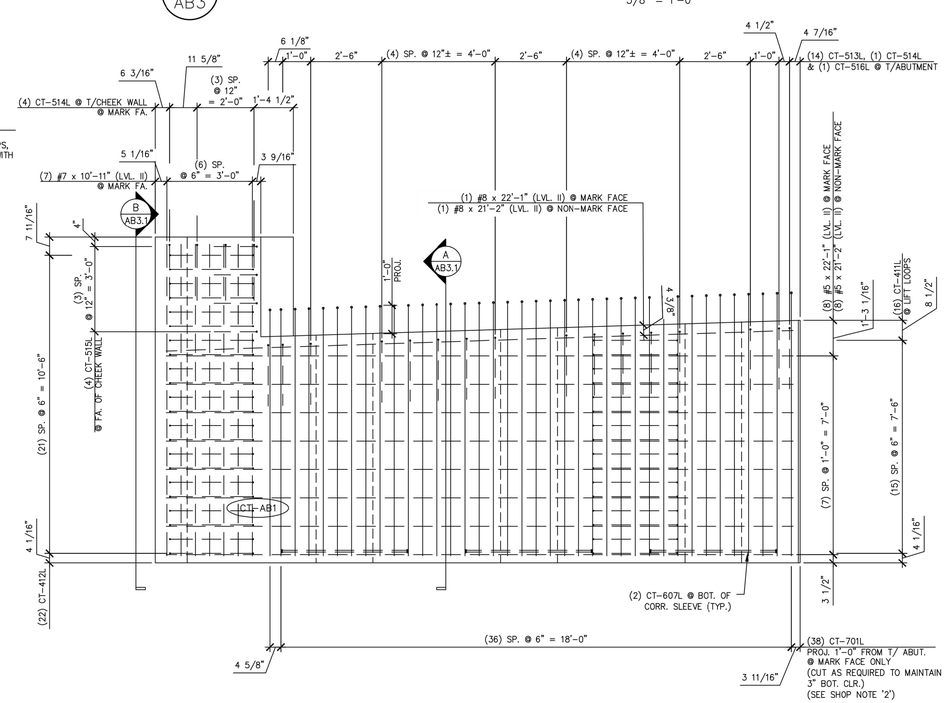


4 AB3 ABUTMENT REINFORCING MARK FACE ELEVATION

(ONLY #7 PROJECTING BARS (LVL. II) SHOWN.
ALL OTHER PROJECTING BARS ARE NOT SHOWN HERE FOR CLARITY.
SEE DETAILS "A/AB3.1" AND "2/AB3" FOR ADDITIONAL PROJECTING BARS)

3/8" = 1'-0"

SHOP NOTES:

1. ALL EDGES OF ABUTMENT SHALL RECEIVE A 1" CHAMFER (U.N.O.)
2. ENDS OF CUT BARS SHALL BE COATED WITH TOUCH UP PRODUCT SUPPLIED BY THE REBAR MANUFACTURER.

SHOP NOTE:
f'c = 5,000 PSI
f'ci = 5,000 PSI
MIX: #425M-NO DCI

| MARK: CT-AB1 | QTY.: 1 | WT.: 45.34 T | VOL.: 22.39 cy |
|---|---|---|---|

MATERIAL LIST / ABUTMENT

| ITEM | MARK | DESCRIPTION | QTY. |
|---|---|---|---|
| 1 | CT-701L | #7 BENT BAR (LEVEL II, DUAL COATED) | 38 |
| 2 | CT-607L | #6 BENT BAR (LEVEL II, DUAL COATED) | 6 |
| 3 | CT-608L | #6 BENT BAR (LEVEL II, DUAL COATED) | 17 |
| 4 | CT-609L | #6 BENT BAR (LEVEL II, DUAL COATED) | 30 |
| 5 | CT-614L | #6 BENT BAR (LEVEL II, DUAL COATED) | 4 |
| 6 | CT-513L | #5 BENT BAR (LEVEL II, DUAL COATED) | 14 |
| 7 | CT-514L | #5 BENT BAR (LEVEL II, DUAL COATED) | 5 |
| 8 | CT-515L | #5 BENT BAR (LEVEL II, DUAL COATED) | 4 |
| 9 | CT-516L | #5 BENT BAR (LEVEL II, DUAL COATED) | 1 |
| 10 | CT-411L | #4 BENT BAR (LEVEL II, DUAL COATED) | 16 |
| 11 | CT-412L | #4 BENT BAR (LEVEL II, DUAL COATED) | 22 |
| 12 | | #8 x 22'-1" (LEVEL II, DUAL COATED) | 1 |
| 13 | | #8 x 21'-2" (LEVEL II, DUAL COATED) | 1 |
| 14 | | #7 x 10'-11" (LEVEL II, DUAL COATED) | 11 |
| 15 | | #7 x 9'-3" (LEVEL II, DUAL COATED) | 14 |
| 16 | | #6 x 10'-11" (LEVEL II, DUAL COATED) | 4 |
| 17 | | #5 x 22'-1" (LEVEL II, DUAL COATED) | 8 |
| 18 | | #5 x 21'-2" (LEVEL II, DUAL COATED) | 8 |
| 19 | | 2'-0" ø x 8'-5 13/16" CORRUGATED STEEL PIPE (GALV.) | 1 |
| 20 | | 2'-0" ø x 8'-3 7/16" CORRUGATED STEEL PIPE (GALV.) | 1 |
| 21 | | 2'-0" ø x 8'-1 1/16" CORRUGATED STEEL PIPE (GALV.) | 1 |
| 22 | | | |
| 23 | MK-CT2 | 20T x 19 3/4" SWIFT LIFT LIFTER | 2 |
| 24 | | SET OF (3) 0.60"ø STRAND LIFTING LOOPS | 2 |
| 25 | | SET OF (4) 1/2"ø STRANDS | 2 |
| 26 | | | |

Revision 1 5.6.15

Vermont Agency of Transportation

2015-05-11_Castleton BRF 0152(12) RR.pdf

RECEIVED

ON: May 6, 2015

and Checked for

CONFORMANCE

BY: Jennifer Fitch DATE: 05/12/2015

SHOP DRAWING REVIEW

X REVIEWED AS REQUIRED BY THE CONSTRUCTION CONTRACT DOCUMENTS AND APPROVED, BUT ONLY FOR CONFORMANCE TO THE DESIGN CONCEPT OF THE WORK, AND SUBJECT TO FURTHER LIMITATIONS AND REQUIREMENTS CONTAINED IN THE CONSTRUCTION CONTRACT DOCUMENTS.

☐ REJECTED ☐ REVISE AND RESUBMIT ☐ FURNISH AS CORRECTED

CORRECTIONS OR COMMENTS MADE ON THE SHOP DRAWINGS DURING THIS REVIEW DO NOT RELIEVE CONTRACTOR FROM COMPLIANCE WITH REQUIREMENTS OF THE DRAWINGS AND SPECIFICATIONS. THIS CHECK IS ONLY FOR REVIEW OF GENERAL CONFORMANCE WITH THE DESIGN CONCEPT OF THE PROJECT AND GENERAL COMPLIANCE WITH THE INFORMATION GIVEN IN THE CONTRACT DOCUMENTS. THE CONTRACTOR IS RESPONSIBLE FOR: CONFIRMING AND CORRELATING ALL QUANTITIES AND DIMENSIONS; SELECTING FABRICATION PROCESSES AND TECHNIQUES OF CONSTRUCTION; COORDINATING HIS WORK WITH THAT OF ALL OTHER TRADES; AND PERFORMING HIS WORK IN A SAFE AND SATISFACTORY MANNER.

vhb 40 IDX Drive, Building 100, Suite 200, South Burlington, VT 05403, 802.497.6100

Job Number: 57632.00
Reviewed By: E.F. LAWES
Date: May 11, 2015

J.P. CARRARA & SONS INC.
Precast & Prestress Manufacturer
2464 CASE STR., MIDDLEBURY, VERMONT 05753 Phone:(802)388-6361 Fax:(802)388-9010

SCHULTZ CONSTRUCTION
CONTRACTOR
BALLSTON SPA, NY

STATE OF VERMONT AGENCY OF TRANSPORTATION
COUNTY OF RUTLAND

TOWN OF CASTLETON
VT ROUTE 30 (RURAL MINOR ARTERIAL)
BRIDGE NO.: 93 PROJECT NO.: BRF 015-2(10)

PRECAST ABUTMENT DETAILS "CT-AB1"

DATE: MAY 06, 2015
SCALE: NOTED
CHKD: R.M. DFTM: PSS
JOB NO: 23456-015
DWG. NO: AB3

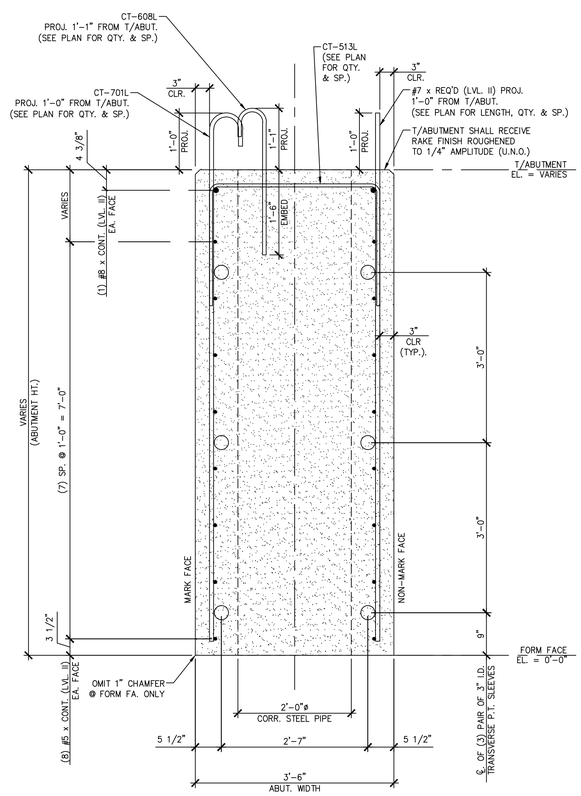


A / AB3.1 ABUTMENT SECTION

3/4" = 1'-0"

SHOP NOTE:
ALL EDGES OF ABUTMENT SHALL
RECEIVE A 1" CHAMFER (U.N.O.)

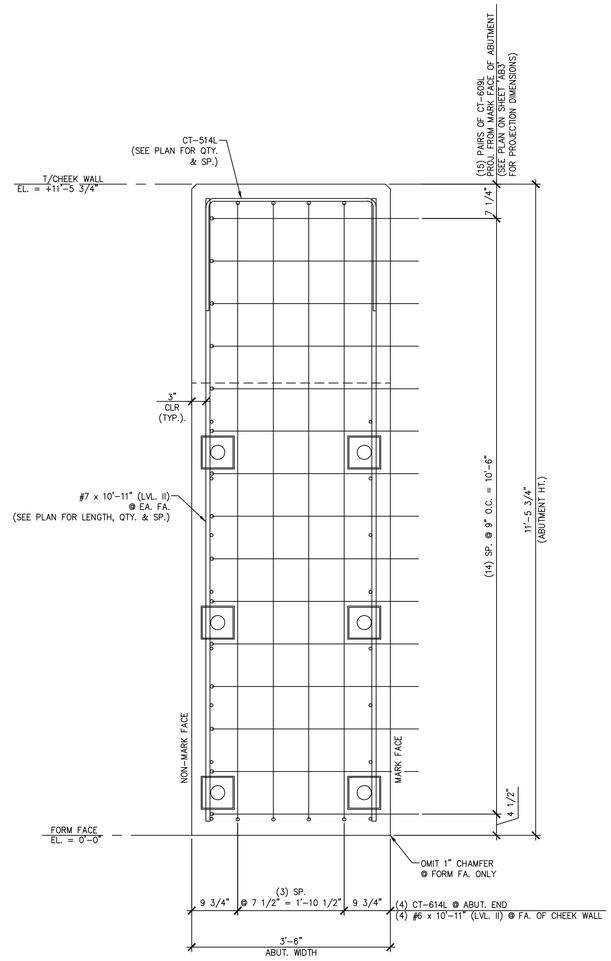


B / AB3.1 ABUTMENT SECTION

3/4" = 1'-0"

SHOP NOTE:
ALL EDGES OF ABUTMENT SHALL
RECEIVE A 1" CHAMFER (U.N.O.)

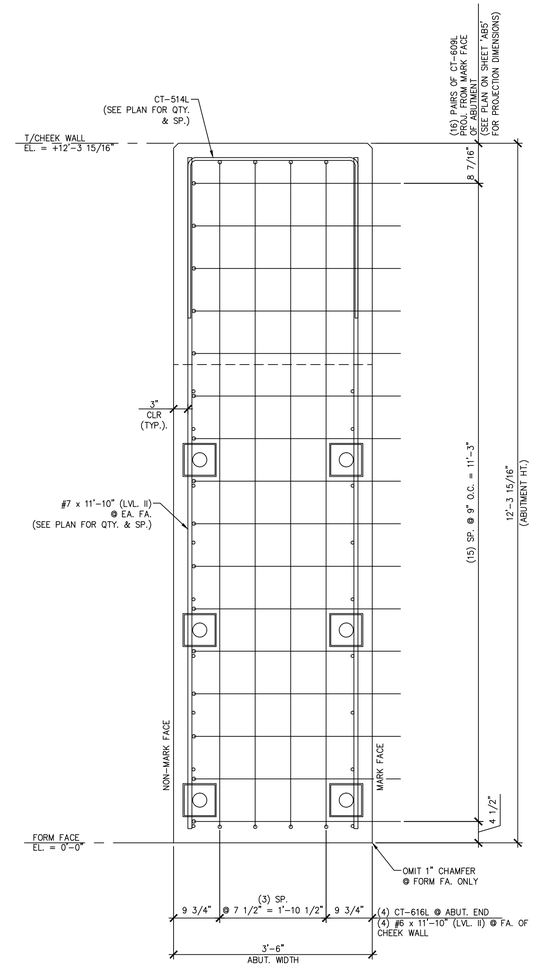


C / AB3.1 ABUTMENT SECTION

3/4" = 1'-0"

SHOP NOTE:
ALL EDGES OF ABUTMENT SHALL
RECEIVE A 1" CHAMFER (U.N.O.)

Vermont Agency of Transportation

2015-06-11_Castleton BRF 015(10) PS.pdf

RECEIVED

ON: May 6, 2015

and Checked for

CONFORMANCE

BY: Jennifer Fitch DATE: 05/12/2015

**SHOP DRAWING REVIEW**

☒ REVIEWED AS REQUIRED BY THE CONSTRUCTION CONTRACT DOCUMENTS AND APPROVED, BUT ONLY FOR CONFORMANCE TO THE DESIGN CONCEPT OF THE WORK, AND SUBJECT TO FURTHER LIMITATIONS AND REQUIREMENTS CONTAINED IN THE CONSTRUCTION CONTRACT DOCUMENTS.

☐ REJECTED ☐ REVISE AND RESUBMIT ☐ FURNISH AS CORRECTED

CORRECTIONS OR COMMENTS MADE ON THE SHOP DRAWINGS DURING THIS REVIEW DO NOT RELIEVE CONTRACTOR FROM COMPLIANCE WITH REQUIRMENTS OF THE DRAWINGS AND SPECIFICATIONS. THIS CHECK IS ONLY FOR REVIEW OF GENERAL CONFORMANCE WITH THE DESIGN CONCEPT OF THE PROJECT AND GENERAL COMPLIANCE WITH THE INFORMATION GIVEN IN THE CONTRACT DOCUMENTS. THE CONTRACTOR IS RESPONSIBLE FOR: CONFIRMING AND CORRELATING ALL QUANTITIES AND DIMENSIONS; SELECTING FABRICATION PROCESSES AND TECHNIQUES OF CONSTRUCTION; COORDINATING HIS WORK WITH THAT OF ALL OTHER TRADES; AND PERFORMING HIS WORK IN A SAFE AND SATISFACTORY MANNER.

vhb
40 IDX Drive
Building 100, Suite 200
South Burlington, VT 05403
802.497.6100

Job Number: 57632.00
Reviewed By: E.F. LAWES
Date: May 11, 2015

J.P. CARRARA & SONS INC.
Precast & Prestress Manufacturer
2464 CASE STR., MIDDLEBURY, VERMONT 05753 Phone:(802)388-6361 Fax:(802)388-9010

SCHULTZ CONSTRUCTION
CONTRACTOR
BALLSTON SPA, NY

STATE OF VERMONT AGENCY OF TRANSPORTATION
COUNTY OF RUTLAND

DATE: MAY 06, 2015
SCALE: NOTED

TOWN OF CASTLETON
VT ROUTE 30 (RURAL MINOR ARTERIAL)
BRIDGE NO.: 93 PROJECT NO.: BRF 015-2(10)

CHKD: R.M. DFTM: PSS
JOB NO: 23456-015

PRECAST ABUTMENT DETAILS "CT-AB1" & "CT-AB4"

DWG. NO: AB3.1

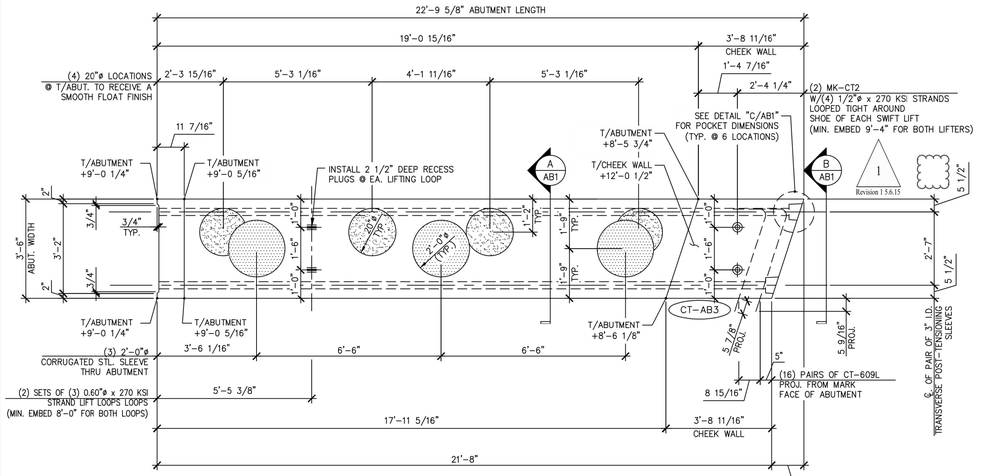


1 AB4 ABUTMENT DIMENSIONAL PLAN VIEW IN FORM

3/8" = 1'-0"

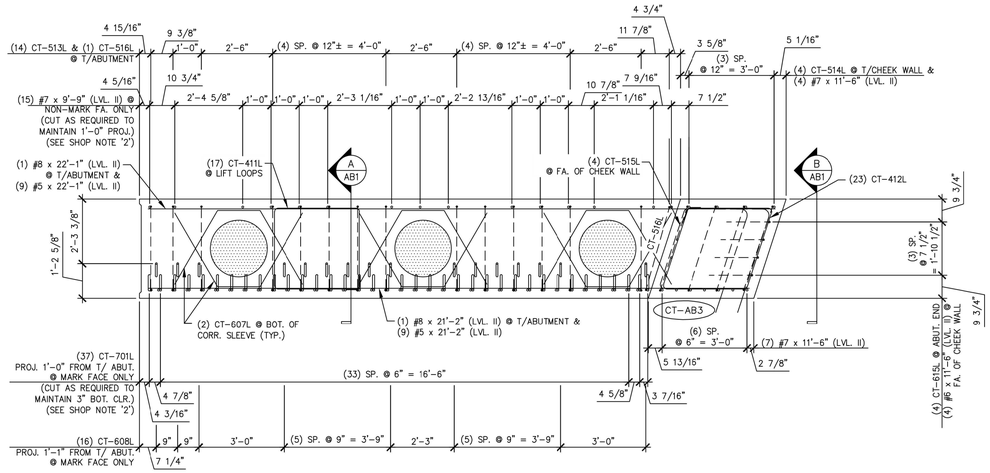


3 AB4 ABUTMENT REINFORCING PLAN VIEW IN FORM

3/8" = 1'-0"

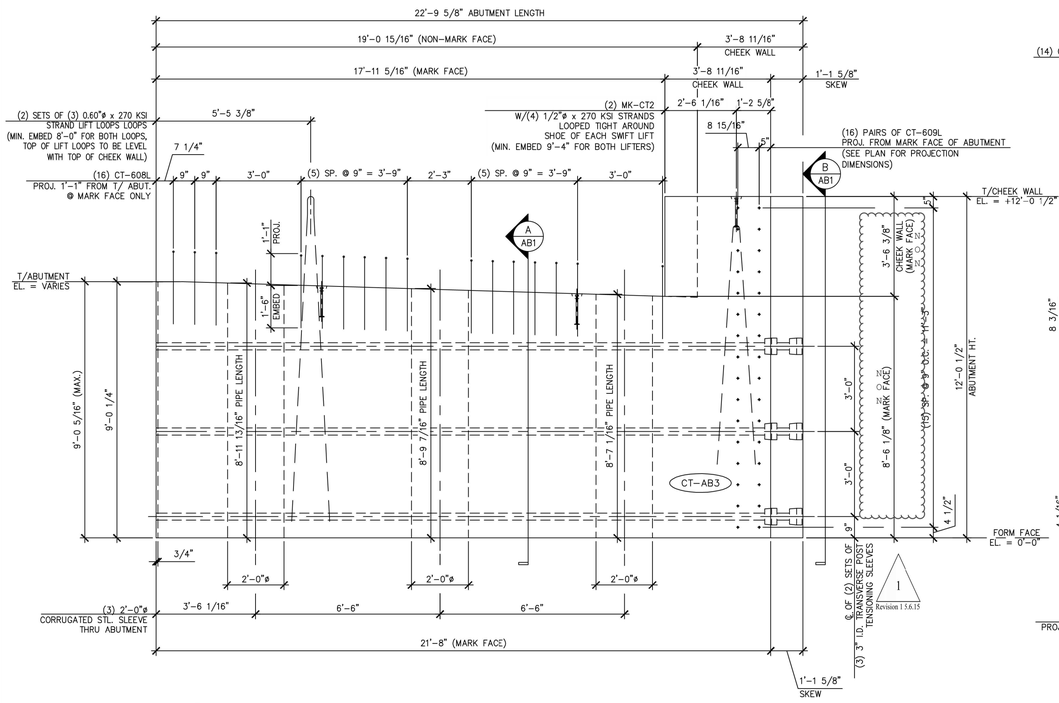


2 AB4 ABUTMENT DIMENSIONAL MARK FACE ELEVATION

3/8" = 1'-0"

(ONLY CT-608L PROJECTING BARS SHOWN.
ALL OTHER PROJECTING BARS ARE NOT SHOWN HERE FOR CLARITY.
SEE DETAILS "A/AB1" AND "4/AB4" FOR ADDITIONAL PROJECTING BARS)

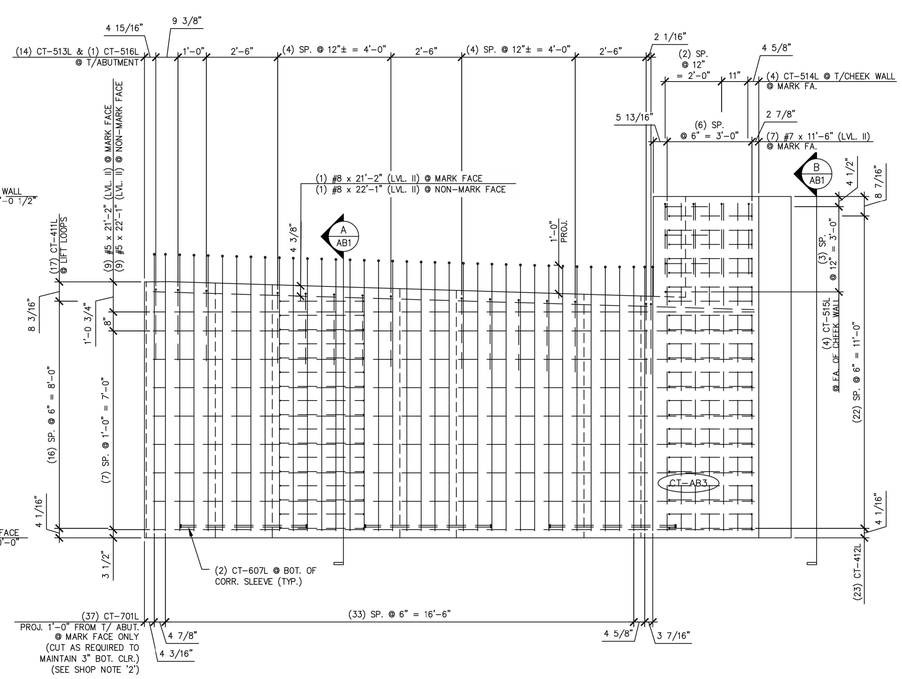


4 AB4 ABUTMENT REINFORCING MARK FACE ELEVATION

3/8" = 1'-0"

(ONLY #7 PROJECTING BARS (LVL. II) SHOWN.
ALL OTHER PROJECTING BARS ARE NOT SHOWN HERE FOR CLARITY.
SEE DETAILS "A/AB1" AND "2/AB4" FOR ADDITIONAL PROJECTING BARS)

1 Revision 1 5.6.15

SHOP NOTE:
$f'c$ = 5,000 PSI
$f'ci$ = 5,000 PSI
MIX: #425M-NO DCI

SHOP NOTES:
1. ALL EDGES OF ABUTMENT SHALL RECEIVE A 1" CHAMFER (U.N.O.)
2. ENDS OF CUT BARS SHALL BE COATED WITH TOUCH UP PRODUCT SUPPLIED BY THE REBAR MANUFACTURER.

| MARK: CT-AB3 | QTY.: 1 | WT.: 48.10 T | VOL.: 23.75 cy |
|---|---|---|---|

MATERIAL LIST / ABUTMENT

| ITEM | MARK | DESCRIPTION | QTY. |
|---|---|---|---|
| 1 | CT-701L | #7 BENT BAR (LEVEL II, DUAL COATED) | 37 |
| 2 | CT-607L | #6 BENT BAR (LEVEL II, DUAL COATED) | 6 |
| 3 | CT-608L | #6 BENT BAR (LEVEL II, DUAL COATED) | 16 |
| 4 | CT-609L | #6 BENT BAR (LEVEL II, DUAL COATED) | 32 |
| 5 | CT-615L | #6 BENT BAR (LEVEL II, DUAL COATED) | 4 |
| 6 | CT-513L | #5 BENT BAR (LEVEL II, DUAL COATED) | 14 |
| 7 | CT-514L | #5 BENT BAR (LEVEL II, DUAL COATED) | 4 |
| 8 | CT-515L | #5 BENT BAR (LEVEL II, DUAL COATED) | 4 |
| 9 | CT-516L | #5 BENT BAR (LEVEL II, DUAL COATED) | 1 |
| 10 | CT-411L | #4 BENT BAR (LEVEL II, DUAL COATED) | 17 |
| 11 | CT-412L | #4 BENT BAR (LEVEL II, DUAL COATED) | 23 |
| 12 | | | |
| 13 | | #8 x 22'-1" (LEVEL II, DUAL COATED) | 1 |
| 14 | | #8 x 21'-2" (LEVEL II, DUAL COATED) | 1 |
| 15 | | #7 x 11'-6" (LEVEL II, DUAL COATED) | 11 |
| 16 | | #7 x 9'-9" (LEVEL II, DUAL COATED) | 15 |
| 17 | | #6 x 11'-6" (LEVEL II, DUAL COATED) | 4 |
| 18 | | #5 x 22'-1" (LEVEL II, DUAL COATED) | 9 |
| 19 | | #5 x 21'-2" (LEVEL II, DUAL COATED) | 9 |
| 20 | | 2'-0" ø x 8'-7 1/16" CORRUGATED STEEL PIPE (GALV.) | 1 |
| 21 | | 2'-0" ø x 8'-9 7/16" CORRUGATED STEEL PIPE (GALV.) | 1 |
| 22 | | 2'-0" ø x 8'-11 13/16" CORRUGATED STEEL PIPE (GALV.) | 1 |
| 23 | MK-CT2 | 20T x 19 3/4" SWIFT LIFT LIFTER | 2 |
| 24 | | SET OF (3) 0.60"ø STRAND LIFTING LOOPS | 2 |
| 25 | | SET OF (4) 1/2"ø STRANDS | 2 |

Vermont Agency of Transportation
2015-05-13_Castleton BRF 015(10) RR.pdf
RECEIVED
ON: May 6, 2015
and Checked for
CONFORMANCE
BY: Jennifer Fitch DATE: 05/12/2015

SHOP DRAWING REVIEW

X REVIEWED AS REQUIRED BY THE CONSTRUCTION CONTRACT DOCUMENTS AND APPROVED, BUT ONLY FOR CONFORMANCE TO THE DESIGN CONCEPT OF THE WORK, AND SUBJECT TO FURTHER LIMITATIONS AND REQUIREMENTS CONTAINED IN THE CONSTRUCTION CONTRACT DOCUMENTS.

☐ REJECTED ☐ REVISE AND RESUBMIT ☐ FURNISH AS CORRECTED

CORRECTIONS OR COMMENTS MADE ON THE SHOP DRAWINGS DURING THIS REVIEW DO NOT RELIEVE CONTRACTOR FROM COMPLIANCE WITH REQUIREMENTS OF THE DRAWINGS AND SPECIFICATIONS. THIS CHECK IS ONLY FOR REVIEW OF GENERAL CONFORMANCE WITH THE DESIGN CONCEPT OF THE PROJECT AND GENERAL COMPLIANCE WITH THE INFORMATION GIVEN IN THE CONTRACT DOCUMENTS. THE CONTRACTOR IS RESPONSIBLE FOR: CONFIRMING AND CORRELATING ALL QUANTITIES AND DIMENSIONS; SELECTING FABRICATION PROCESSES AND TECHNIQUES OF CONSTRUCTION; COORDINATING HIS WORK WITH THAT OF ALL OTHER TRADES; AND PERFORMING HIS WORK IN A SAFE AND SATISFACTORY MANNER.

vhb 40 IDX Drive, Building 100, Suite 200, South Burlington, VT 05403, 802.497.6100

Job Number: 57632.00
Reviewed By: E.F. LAWES
Date: May 11, 2015

J.P. CARRARA & SONS INC.
Precast & Prestress Manufacturer
2464 CASE STR., MIDDLEBURY, VERMONT 05753 Phone:(802)388-6361 Fax:(802)388-9010

SCHULTZ CONSTRUCTION
CONTRACTOR
BALLSTON SPA, NY

STATE OF VERMONT AGENCY OF TRANSPORTATION
COUNTY OF RUTLAND

TOWN OF CASTLETON
VT ROUTE 30 (RURAL MINOR ARTERIAL)
BRIDGE NO.: 93 PROJECT NO.: BRF 015-2(10)

PRECAST ABUTMENT DETAILS

DATE: MAY 06, 2015
SCALE: NOTED
CHKD: R.M. DFTM: PSS
JOB NO: 23456-015
DWG. NO: AB4

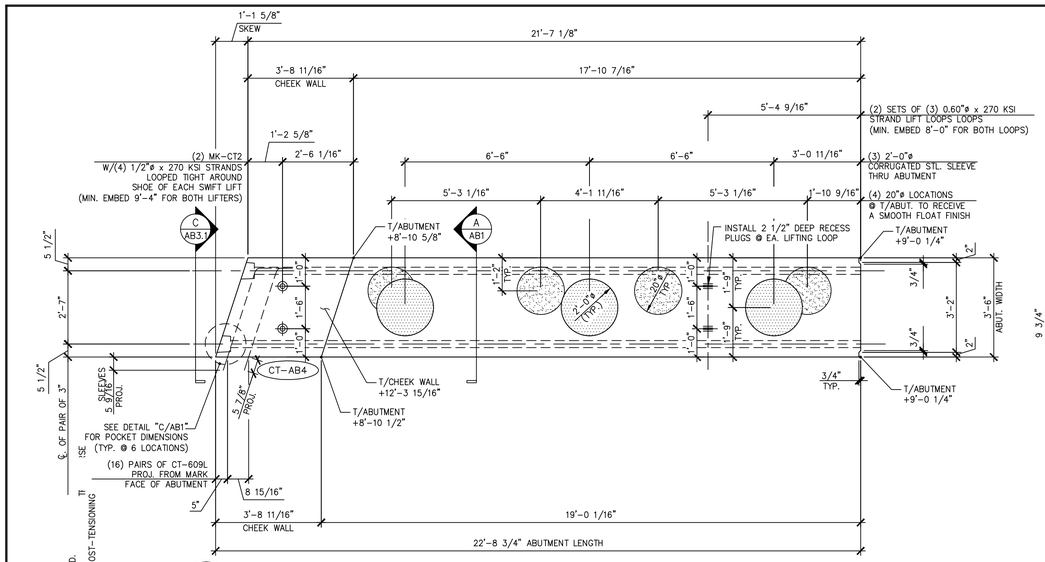


1 AB5 ABUTMENT DIMENSIONAL PLAN VIEW IN FORM

3/8" = 1'-0"

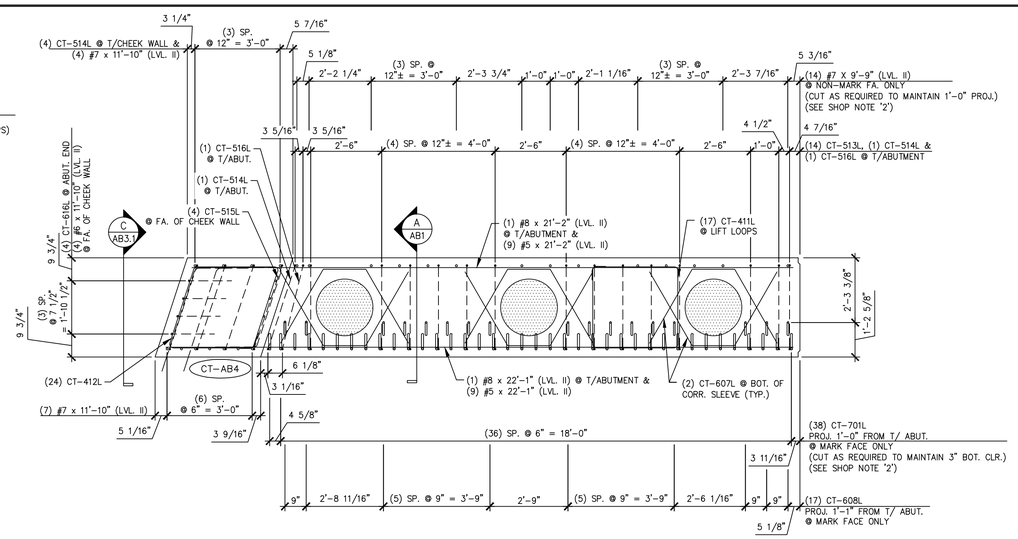


3 AB5 ABUTMENT REINFORCING PLAN VIEW IN FORM

3/8" = 1'-0"

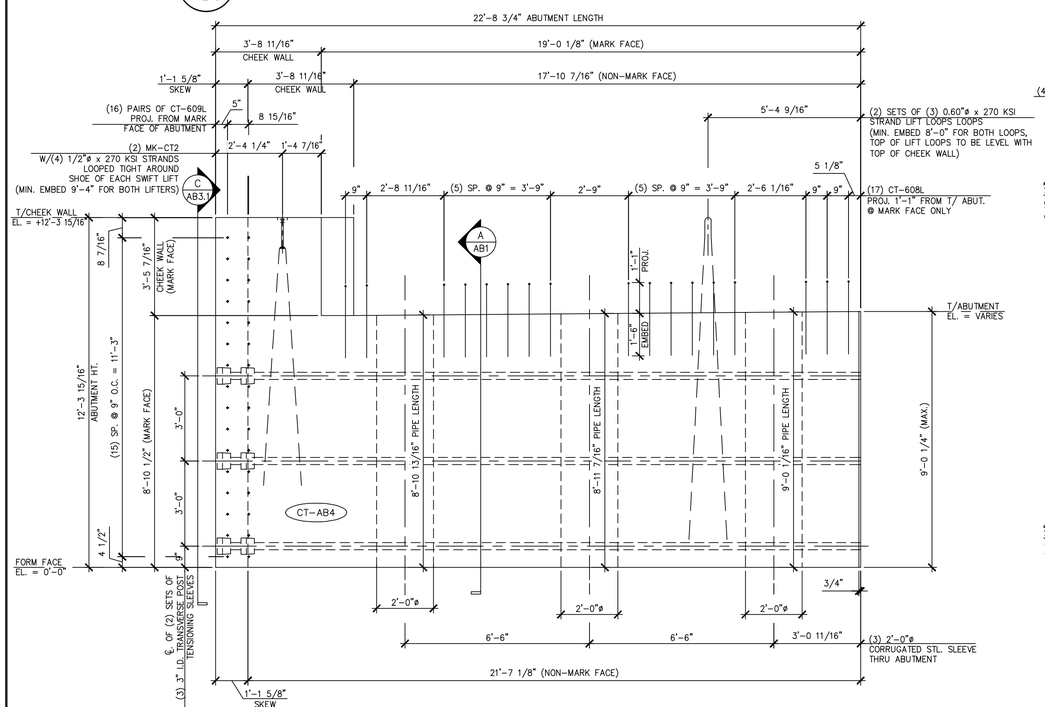


2 AB5 ABUTMENT DIMENSIONAL MARK FACE ELEVATION

3/8" = 1'-0"

(ONLY CT-608L PROJECTING BARS SHOWN.
ALL OTHER PROJECTING BARS ARE NOT SHOWN HERE FOR CLARITY.
SEE DETAILS "A/AB1" AND "4/AB5" FOR ADDITIONAL PROJECTING BARS)

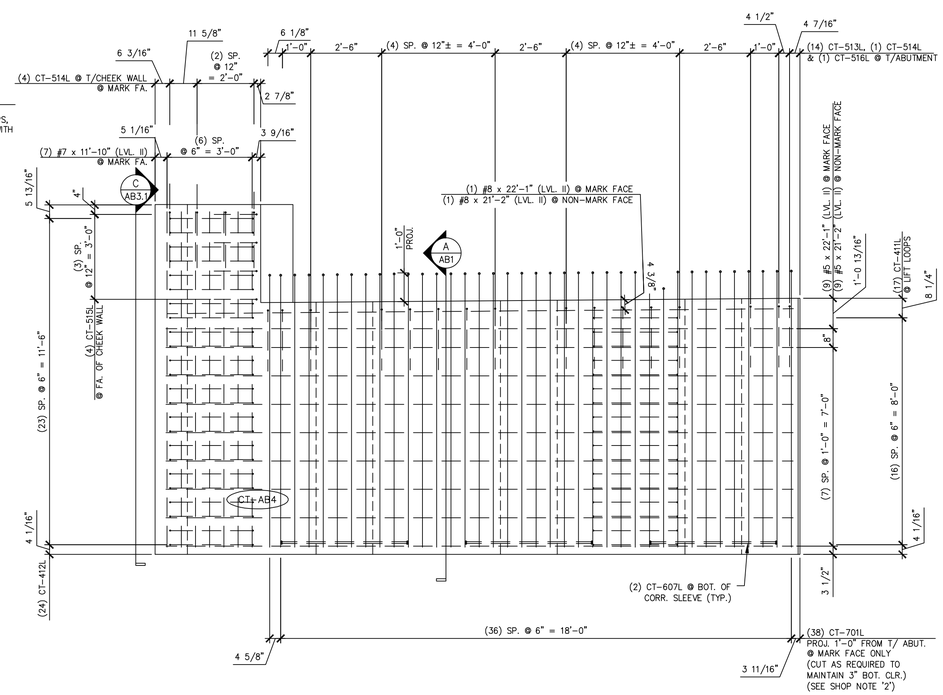


4 AB5 ABUTMENT REINFORCING MARK FACE ELEVATION

3/8" = 1'-0"

(ONLY #7 PROJECTING BARS (LVL. II) SHOWN.
ALL OTHER PROJECTING BARS ARE NOT SHOWN HERE FOR CLARITY.
SEE DETAILS "A/AB1" AND "2/AB5" FOR ADDITIONAL PROJECTING BARS)

SHOP NOTE:
f'c = 5,000 PSI
f'ci = 5,000 PSI
MIX: #425M-NO DCI

SHOP NOTES:
1. ALL EDGES OF ABUTMENT SHALL RECEIVE A 1" CHAMFER (U.N.O.)
2. ENDS OF CUT BARS SHALL BE COATED WITH TOUCH UP PRODUCT SUPPLIED BY THE REBAR MANUFACTURER.

| MARK: CT-AB4 | QTY.: 1 | WT.: 49.05 T | VOL.: 24.22 cy |
|---|---|---|---|

MATERIAL LIST / ABUTMENT

| ITEM | MARK | DESCRIPTION | QTY. |
|---|---|---|---|
| 1 | CT-701L | #7 BENT BAR (LEVEL II, DUAL COATED) | 38 |
| 2 | CT-607L | #6 BENT BAR (LEVEL II, DUAL COATED) | 6 |
| 3 | CT-608L | #6 BENT BAR (LEVEL II, DUAL COATED) | 17 |
| 4 | CT-609L | #6 BENT BAR (LEVEL II, DUAL COATED) | 32 |
| 5 | CT-616L | #6 BENT BAR (LEVEL II, DUAL COATED) | 4 |
| 6 | CT-513L | #5 BENT BAR (LEVEL II, DUAL COATED) | 14 |
| 7 | CT-514L | #5 BENT BAR (LEVEL II, DUAL COATED) | 5 |
| 8 | CT-515L | #5 BENT BAR (LEVEL II, DUAL COATED) | 4 |
| 9 | CT-516L | #5 BENT BAR (LEVEL II, DUAL COATED) | 1 |
| 10 | CT-411L | #4 BENT BAR (LEVEL II, DUAL COATED) | 17 |
| 11 | CT-412L | #4 BENT BAR (LEVEL II, DUAL COATED) | 24 |
| 12 | | | |
| 13 | | #8 x 22'-1" (LEVEL II, DUAL COATED) | 1 |
| 14 | | #8 x 21'-2" (LEVEL II, DUAL COATED) | 1 |
| 15 | | #7 x 11'-10" (LEVEL II, DUAL COATED) | 11 |
| 16 | | #7 x 9'-9" (LEVEL II, DUAL COATED) | 14 |
| 17 | | #6 x 11'-10" (LEVEL II, DUAL COATED) | 4 |
| 18 | | #5 x 22'-1" (LEVEL II, DUAL COATED) | 9 |
| 19 | | #5 x 21'-2" (LEVEL II, DUAL COATED) | 9 |
| 20 | | 2'-0" ø x 9'-0 1/16" CORRUGATED STEEL PIPE (GALV.) | 1 |
| 21 | | 2'-0" ø x 8'-11 7/16" CORRUGATED STEEL PIPE (GALV.) | 1 |
| 22 | | 2'-0" ø x 8'-10 13/16" CORRUGATED STEEL PIPE (GALV.) | 1 |
| 23 | MK-CT2 | 20T x 19 3/4" SWIFT LIFT LIFTER | 2 |
| 24 | | SET OF (3) 0.60"ø STRAND LIFTING LOOPS | 2 |
| 25 | | SET OF (4) 1/2"ø STRANDS | 2 |
| 26 | | | |

Vermont Agency of Transportation
2015-05-11_Castleton BRF 015(10) AB.pdf
RECEIVED
ON: May 6, 2015
and Checked for
CONFORMANCE
BY: Jennifer Fitch DATE: 05/12/2015

SHOP DRAWING REVIEW

X REVIEWED AS REQUIRED BY THE CONSTRUCTION CONTRACT DOCUMENTS AND APPROVED, BUT ONLY FOR CONFORMANCE TO THE DESIGN CONCEPT OF THE WORK, AND SUBJECT TO FURTHER LIMITATIONS AND REQUIREMENTS CONTAINED IN THE CONSTRUCTION CONTRACT DOCUMENTS.

☐ REJECTED ☐ REVISE AND RESUBMIT ☐ FURNISH AS CORRECTED

CORRECTIONS OR COMMENTS MADE ON THE SHOP DRAWINGS DURING THIS REVIEW DO NOT RELIEVE CONTRACTOR FROM COMPLIANCE WITH REQUIREMENTS OF THE DRAWINGS AND SPECIFICATIONS. THIS CHECK IS ONLY FOR REVIEW OF GENERAL CONFORMANCE WITH THE DESIGN CONCEPT OF THE PROJECT AND GENERAL COMPLIANCE WITH THE INFORMATION GIVEN IN THE CONTRACT DOCUMENTS. THE CONTRACTOR IS RESPONSIBLE FOR: CONFIRMING AND CORRELATING ALL QUANTITIES AND DIMENSIONS; SELECTING FABRICATION PROCESSES AND TECHNIQUES OF CONSTRUCTION; COORDINATING HIS WORK WITH THAT OF ALL OTHER TRADES; AND PERFORMING HIS WORK IN A SAFE AND SATISFACTORY MANNER.

vhb 40 IDX Drive, Building 100, Suite 200, South Burlington, VT 05403, 802.497.6100

Job Number: 57632.00
Reviewed By: E.F. LAWES
Date: May 11, 2015

J.P. CARRARA & SONS INC.
Precast & Prestress Manufacturer
2464 CASE STR., MIDDLEBURY, VERMONT 05753 Phone:(802)388-6361 Fax:(802)388-9010

SCHULTZ CONSTRUCTION
CONTRACTOR
BALLSTON SPA, NY

STATE OF VERMONT AGENCY OF TRANSPORTATION
COUNTY OF RUTLAND

TOWN OF CASTLETON
VT ROUTE 30 (RURAL MINOR ARTERIAL)
BRIDGE NO.: 93 PROJECT NO.: BRF 015-2(10)

PRECAST ABUTMENT DETAILS "CT-AB4"

DATE: MAY 06, 2015
SCALE: NOTED
CHKD: R.M. DFTM: PSS
JOB NO: 23456-015
DWG. NO: AB5

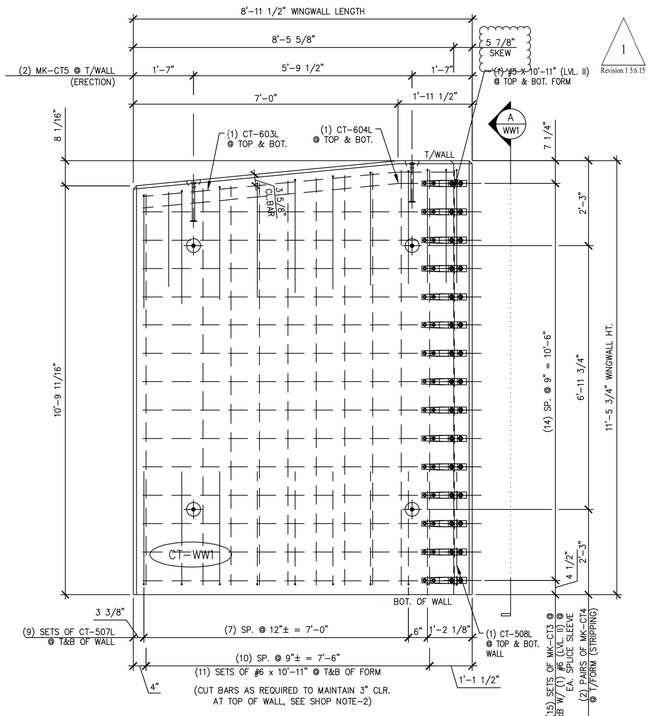


1 / WW1 PLAN VIEW IN FORM

1/2" = 1'-0"

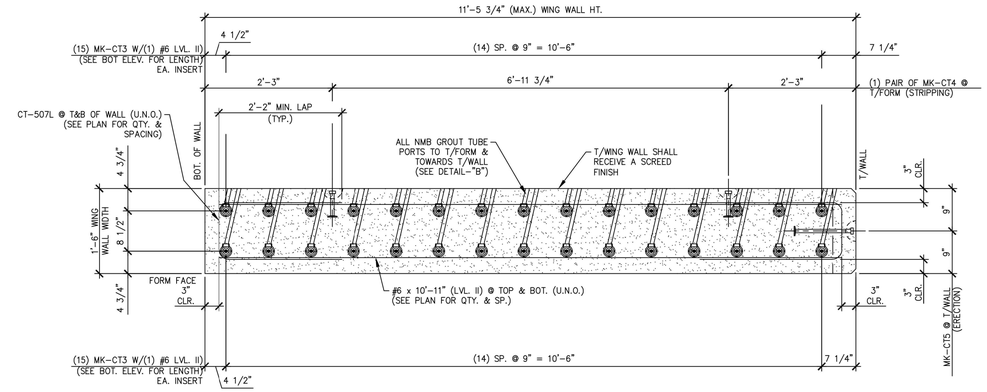


A / WW1 WINGWALL ELEVATION

3/4" = 1'-0"

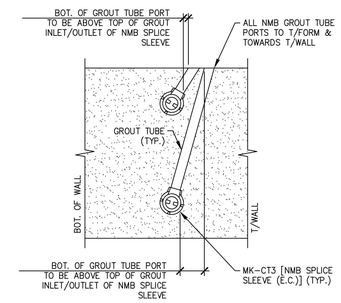


DETAIL – "B"

3/4" = 1'-0"

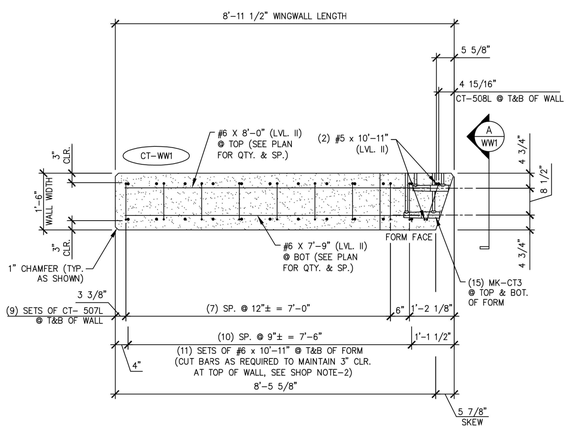


WING WALL BOTTOM ELEVATION

1/2" = 1'-0"

SHOP NOTES:
1. ALL EDGES OF WING WALLS, FORM FACE & T/WALL FACE, SHALL RECEIVE A 1" CHAMFER (UNLESS NOTED OTHERWISE)

2. ENDS OF CUT BARS SHALL BE COATED WITH TOUCH UP PRODUCT SUPPLIED BY THE REBAR MANUFACTURER.

SHOP NOTE:
f'c = 5,000 PSI
f'ci = 3,500 PSI
MIX: #445MSCC

| MARK: CT-WW1 | QTY.: 1 | WT.: 10.98 T | VOL.: 5.42 cy |
|---|---|---|---|

MATERIAL LIST / WINGWALL

| ITEM | MARK | DESCRIPTION | QTY. |
|---|---|---|---|
| 1 | CT-507L | #5 BENT BAR (LEVEL II, DUAL COATED) | 18 |
| 2 | CT-508L | #5 BENT BAR (LEVEL II, DUAL COATED) | 2 |
| 3 | CT-603L | #6 BENT BAR (LEVEL II, DUAL COATED) | 2 |
| 4 | CT-604L | #6 BENT BAR (LEVEL II, DUAL COATED) | 2 |
| 5 | | #5 x 10'-11" (LEVEL II, DUAL COATED) | 2 |
| 6 | | #6 x 10'-11" (LEVEL II, DUAL COATED) | 22 |
| 7 | | #6 x 8'-0" (LEVEL II, DUAL COATED) | 14 |
| 8 | | #6 x 7'-9" (LEVEL II, DUAL COATED) | 14 |
| 9 | | | |
| 10 | | | |
| 11 | | | |
| 12 | MK-CT3 | NMB SPLICE SLEEVE 6U-X(PG) (EPOXY COATED) | 30 |
| 13 | MK-CT4 | 4T x 7 1/8" SWIFT LIFT LIFTER | 4 |
| 14 | MK-CT5 | 8T x 13 3/8" SWIFT LIFT LIFTER | 2 |
| 15 | | | |

1
Revision 1 5.6.15

Vermont Agency of Transportation
2015-05-11_Castleton BRF 015(2)(3).WW.pdf
RECEIVED
ON: May 6, 2015
and Checked for
CONFORMANCE
BY: Jennifer Fitch DATE: 05/12/2015

SHOP DRAWING REVIEW

X REVIEWED AS REQUIRED BY THE CONSTRUCTION CONTRACT DOCUMENTS AND APPROVED, BUT ONLY FOR CONFORMANCE TO THE DESIGN CONCEPT OF THE WORK, AND SUBJECT TO FURTHER LIMITATIONS AND REQUIREMENTS CONTAINED IN THE CONSTRUCTION CONTRACT DOCUMENTS.

☐ REJECTED ☐ REVISE AND RESUBMIT ☐ FURNISH AS CORRECTED

CORRECTIONS OR COMMENTS MADE ON THE SHOP DRAWINGS DURING THIS REVIEW DO NOT RELIEVE CONTRACTOR FROM COMPLIANCE WITH REQUIRMENTS OF THE DRAWINGS AND SPECIFICATIONS. THIS CHECK IS ONLY FOR REVIEW OF GENERAL CONFORMANCE WITH THE DESIGN CONCEPT OF THE PROJECT AND GENERAL COMPLIANCE WITH THE INFORMATION GIVEN IN THE CONTRACT DOCUMENTS. THE CONTRACTOR IS RESPONSIBLE FOR: CONFIRMING AND CORRELATING ALL QUANTITIES AND DIMENSIONS; SELECTING FABRICATION PROCESSES AND TECHNIQUES OF CONSTRUCTION; COORDINATING HIS WORK WITH THAT OF ALL OTHER TRADES; AND PERFORMING HIS WORK IN A SAFE AND SATISFACTORY MANNER.

vhb
40 IDX Drive
Building 100, Suite 200
South Burlington, VT 05403
802.497.6100

Job Number: 57632.00
Reviewed By: E.F. LAWES
Date: May 11, 2015

J.P. CARRARA & SONS INC.
Precast & Prestress Manufacturer
2464 CASE STR., MIDDLEBURY, VERMONT 05753 Phone:(802)388-6361 Fax:(802)388-9010

SCHULTZ CONSTRUCTION
CONTRACTOR
BALLSTON SPA, NY

STATE OF VERMONT AGENCY OF TRANSPORTATION
COUNTY OF RUTLAND

TOWN OF CASTLETON
VT ROUTE 30 (RURAL MINOR ARTERIAL)
BRIDGE NO.: 93 PROJECT NO.: BRF 015-2(10)

PRECAST WINGWALL DETAILS "CT-WW1"

DATE: MAY 06, 2015
SCALE: NOTED
CHKD: R.M. DFTM: PSS
JOB NO: 23456-015
DWG. NO: WW1

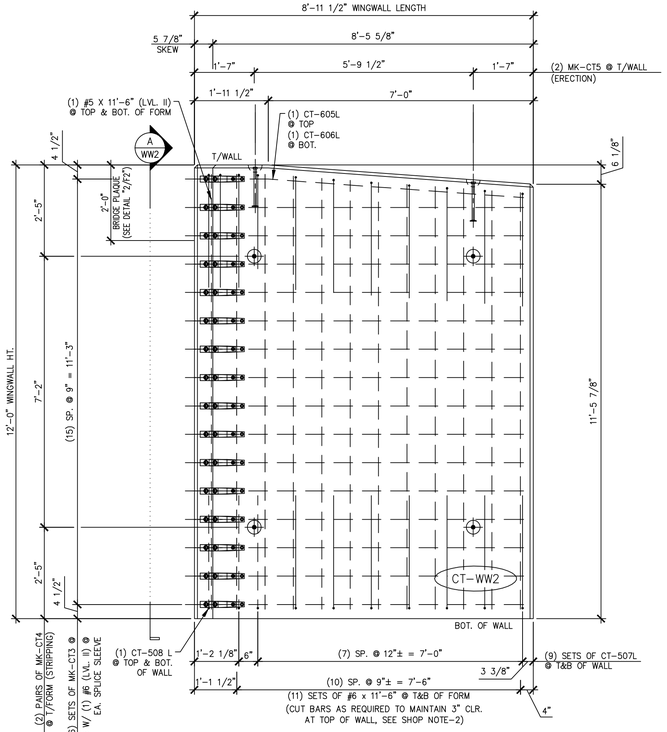


1 / WW2 PLAN VIEW IN FORM
1/2" = 1'-0"

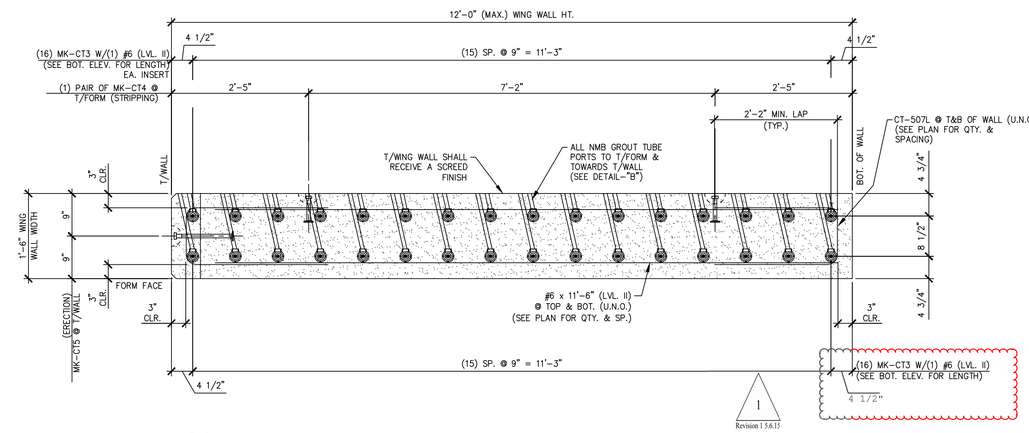


A / WW2 WINGWALL ELEVATION
3/4" = 1'-0"

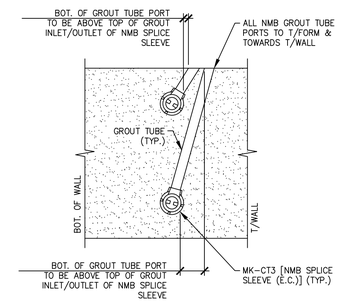


DETAIL - "B"
3/4" = 1'-0"

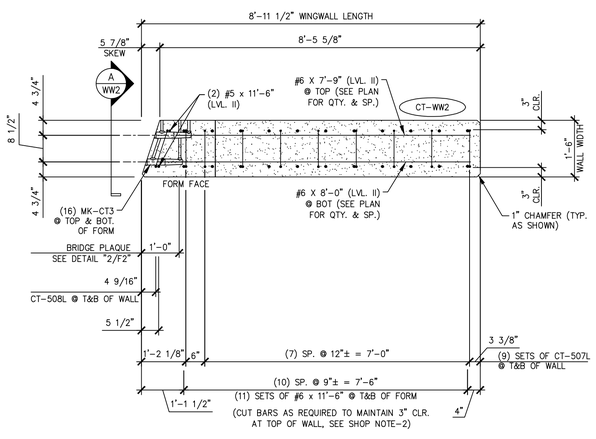


WING WALL BOTTOM ELEVATION
1/2" = 1'-0"

SHOP NOTES:
1. ALL EDGES OF WING WALLS, FORM FACE & T/WALL FACE, SHALL RECEIVE A 1" CHAMFER (UNLESS NOTED OTHERWISE)

2. ENDS OF CUT BARS SHALL BE COATED WITH TOUCH UP PRODUCT SUPPLIED BY THE REBAR MANUFACTURER.

SHOP NOTE:
f'c = 5,000 PSI
f'ci = 3,500 PSI
MIX: #445MSCC

| MARK: CT-WW2 | QTY.: 1 | WT.: 11.56 T | VOL.: 5.71 cy |
|---|---|---|---|

MATERIAL LIST / WINGWALL

| ITEM | MARK | DESCRIPTION | QTY. |
|---|---|---|---|
| 1 | CT-507L | #5 BENT BAR (LEVEL II, DUAL COATED) | 18 |
| 2 | CT-508L | #5 BENT BAR (LEVEL II, DUAL COATED) | 2 |
| 3 | CT-605L | #6 BENT BAR (LEVEL II, DUAL COATED) | 1 |
| 4 | CT-606L | #6 BENT BAR (LEVEL II, DUAL COATED) | 1 |
| 5 | | #5 x 11'-6" (LEVEL II, DUAL COATED) | 2 |
| 6 | | #6 x 11'-6" (LEVEL II, DUAL COATED) | 22 |
| 7 | | #6 x 8'-0" (LEVEL II, DUAL COATED) | 15 |
| 8 | | #6 x 7'-9" (LEVEL II, DUAL COATED) | 15 |
| 9 | | | |
| 10 | | | |
| 11 | | BRIDGE PLAQUE (SUPPLIED BY OTHERS) | 1 |
| 12 | MK-CT3 | NMB SPLICE SLEEVE 6U-X(PG) (EPOXY COATED) | 32 |
| 13 | MK-CT4 | 4T x 7 1/8" SWIFT LIFT LIFTER | 4 |
| 14 | MK-CT5 | 8T x 13 3/8" SWIFT LIFT LIFTER | 2 |
| 15 | | | |

Vermont Agency of Transportation
2015-05-11_Castleton BRF 015(2)(3) RR.pdf
RECEIVED
ON: May 6, 2015
and Checked for
CONFORMANCE
BY: Jennifer Fitch DATE: 05/12/2015

SHOP DRAWING REVIEW

X REVIEWED AS REQUIRED BY THE CONSTRUCTION CONTRACT DOCUMENTS AND APPROVED, BUT ONLY FOR CONFORMANCE TO THE DESIGN CONCEPT OF THE WORK, AND SUBJECT TO FURTHER LIMITATIONS AND REQUIREMENTS CONTAINED IN THE CONSTRUCTION CONTRACT DOCUMENTS.

☐ REJECTED ☐ REVISE AND RESUBMIT ☐ FURNISH AS CORRECTED

CORRECTIONS OR COMMENTS MADE ON THE SHOP DRAWINGS DURING THIS REVIEW DO NOT RELIEVE CONTRACTOR FROM COMPLIANCE WITH REQUIRMENTS OF THE DRAWINGS AND SPECIFICATIONS. THIS CHECK IS ONLY FOR REVIEW OF GENERAL CONFORMANCE WITH THE DESIGN CONCEPT OF THE PROJECT AND GENERAL COMPLIANCE WITH THE INFORMATION GIVEN IN THE CONTRACT DOCUMENTS. THE CONTRACTOR IS RESPONSIBLE FOR: CONFIRMING AND CORRELATING ALL QUANTITIES AND DIMENSIONS; SELECTING FABRICATION PROCESSES AND TECHNIQUES OF CONSTRUCTION; COORDINATING HIS WORK WITH THAT OF ALL OTHER TRADES; AND PERFORMING HIS WORK IN A SAFE AND SATISFACTORY MANNER.

vhb
40 IDX Drive
Building 100, Suite 200
South Burlington, VT 05403
802.497.6100

Job Number: 57632.00
Reviewed By: E.F. LAWES
Date: May 11, 2015

J.P. CARRARA & SONS INC.
Precast & Prestress Manufacturer
2464 CASE STR., MIDDLEBURY, VERMONT 05753 Phone:(802)388-6361 Fax:(802)388-9010

SCHULTZ CONSTRUCTION
CONTRACTOR
BALLSTON SPA, NY

STATE OF VERMONT AGENCY OF TRANSPORTATION
COUNTY OF RUTLAND

TOWN OF CASTLETON
VT ROUTE 30 (RURAL MINOR ARTERIAL)
BRIDGE NO.: 93 PROJECT NO.: BRF 015-2(10)

PRECAST WINGWALL DETAILS "CT-WW2"

DATE: MAY 06, 2015
SCALE: NOTED
CHKD: R.M. DFTM: PSS
JOB NO: 23456-015
DWG. NO: WW2

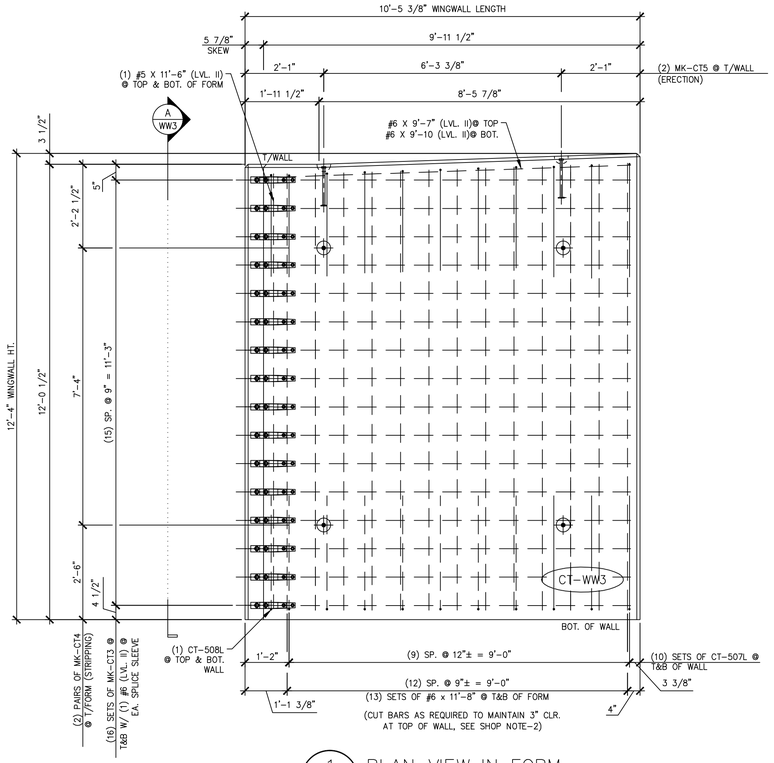


1 / WW3 PLAN VIEW IN FORM
1/2" = 1'-0"

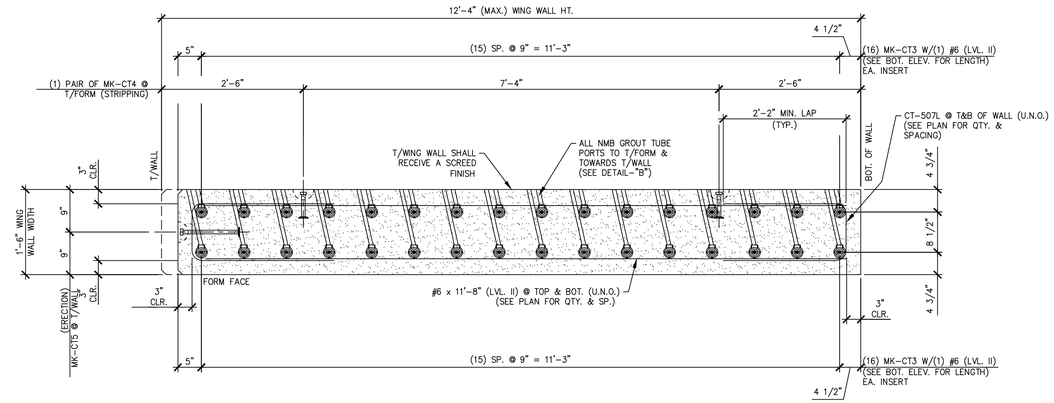


A / WW3 WINGWALL ELEVATION
3/4" = 1'-0"

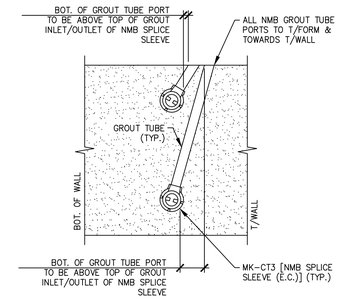


DETAIL – "B"
3/4" = 1'-0"

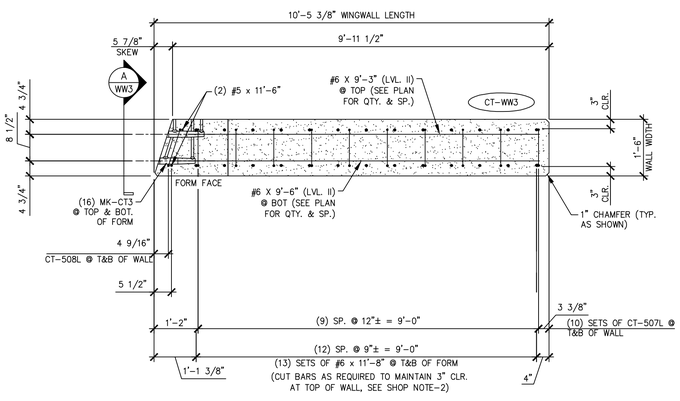


WING WALL BOTTOM ELEVATION
1/2" = 1'-0"

SHOP NOTES:
1. ALL EDGES OF WING WALLS, FORM FACE & T/WALL FACE, SHALL RECEIVE A 1" CHAMFER (UNLESS NOTED OTHERWISE)

2. ENDS OF CUT BARS SHALL BE COATED WITH TOUCH UP PRODUCT SUPPLIED BY THE REBAR MANUFACTURER.

SHOP NOTE:
f'c = 5,000 PSI
f'ci = 3,500 PSI
MIX: #445MSCC

| MARK: CT-WW3 | QTY.: 1 | WT.: 13.95 T | VOL.: 6.89 cy |
|---|---|---|---|

MATERIAL LIST / WINGWALL

| ITEM | MARK | DESCRIPTION | QTY. |
|---|---|---|---|
| 1 | CT-507L | #5 BENT BAR (LEVEL II, DUAL COATED) | 20 |
| 2 | CT-508L | #5 BENT BAR (LEVEL II, DUAL COATED) | 2 |
| 3 | | #5 x 11'-6" (LEVEL II, DUAL COATED) | 2 |
| 4 | | #6 x 11'-8" (LEVEL II, DUAL COATED) | 26 |
| 5 | | #6 x 9'-3" (LEVEL II, DUAL COATED) | 16 |
| 6 | | #6 x 9'-6" (LEVEL II, DUAL COATED) | 16 |
| 7 | | #6 x 9'-7" (LEVEL II, DUAL COATED) | 1 |
| 8 | | #6 x 9'-10" (LEVEL II, DUAL COATED) | 1 |
| 9 | | | |
| 10 | | | |
| 11 | | | |
| 12 | MK-CT3 | NMB SPLICE SLEEVE 6U-X(PG) (EPOXY COATED) | 32 |
| 13 | MK-CT4 | 4T x 7 1/8" SWIFT LIFT LIFTER | 4 |
| 14 | MK-CT5 | 8T x 13 3/8" SWIFT LIFT LIFTER | 2 |
| 15 | | | |

Vermont Agency of Transportation
2015-05-12_Castleton BRF 015(2)SE RR.pdf
RECEIVED
ON: May 6, 2015
and Checked for
CONFORMANCE
BY: Jennifer Fitch DATE: 05/12/2015

SHOP DRAWING REVIEW

☒ REVIEWED AS REQUIRED BY THE CONSTRUCTION CONTRACT DOCUMENTS AND APPROVED, BUT ONLY FOR CONFORMANCE TO THE DESIGN CONCEPT OF THE WORK, AND SUBJECT TO FURTHER LIMITATIONS AND REQUIREMENTS CONTAINED IN THE CONSTRUCTION CONTRACT DOCUMENTS.
☐ REJECTED ☐ REVISE AND RESUBMIT ☐ FURNISH AS CORRECTED

CORRECTIONS OR COMMENTS MADE ON THE SHOP DRAWINGS DURING THIS REVIEW DO NOT RELIEVE CONTRACTOR FROM COMPLIANCE WITH REQUIRMENTS OF THE DRAWINGS AND SPECIFICATIONS. THIS CHECK IS ONLY FOR REVIEW OF GENERAL CONFORMANCE WITH THE DESIGN CONCEPT OF THE PROJECT AND GENERAL COMPLIANCE WITH THE INFORMATION GIVEN IN THE CONTRACT DOCUMENTS. THE CONTRACTOR IS RESPONSIBLE FOR: CONFIRMING AND CORRELATING ALL QUANTITIES AND DIMENSIONS; SELECTING FABRICATION PROCESSES AND TECHNIQUES OF CONSTRUCTION; COORDINATING HIS WORK WITH THAT OF ALL OTHER TRADES; AND PERFORMING HIS WORK IN A SAFE AND SATISFACTORY MANNER.

vhb
40 JDX Drive
Building 100, Suite 200
South Burlington, VT 05403
802.497.6100

Job Number: 57632.00
Reviewed By: E.F. LAWES
Date: May 11, 2015

J.P. CARRARA & SONS INC.
Precast & Prestress Manufacturer
2464 CASE STR., MIDDLEBURY, VERMONT 05753 Phone:(802)388-6361 Fax:(802)388-9010

SCHULTZ CONSTRUCTION
CONTRACTOR
BALLSTON SPA, NY

STATE OF VERMONT AGENCY OF TRANSPORTATION
COUNTY OF RUTLAND

TOWN OF CASTLETON
VT ROUTE 30 (RURAL MINOR ARTERIAL)
BRIDGE NO.: 93 PROJECT NO.: BRF 015-2(10)

PRECAST WINGWALL DETAILS "CT-WW3"

DATE: MAY 06, 2015
SCALE: NOTED
CHKD: R.M. DFTM: PSS
JOB NO: 23456-015
DWG. NO: WW3

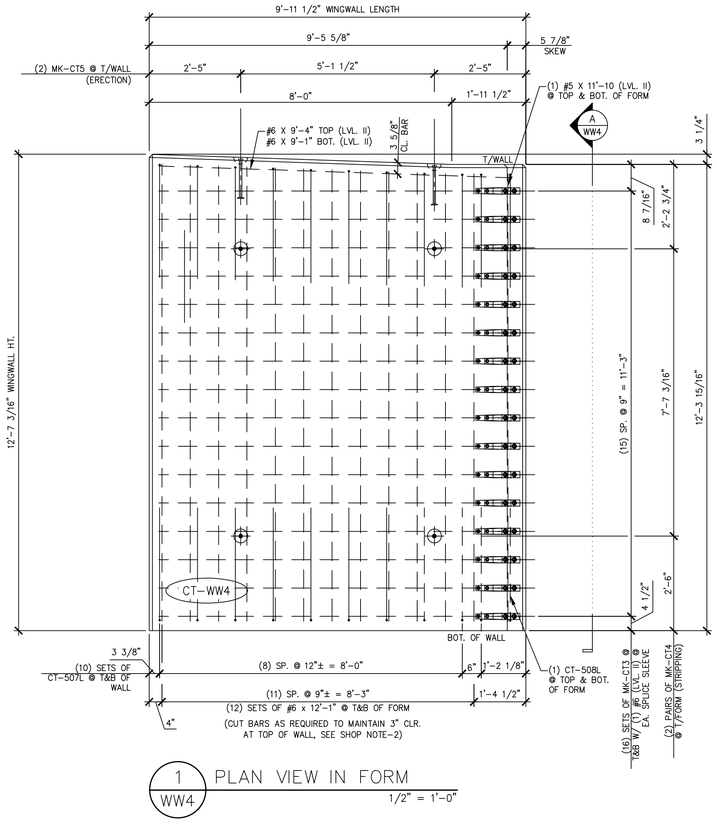


1 / WW4 PLAN VIEW IN FORM

1/2" = 1'-0"

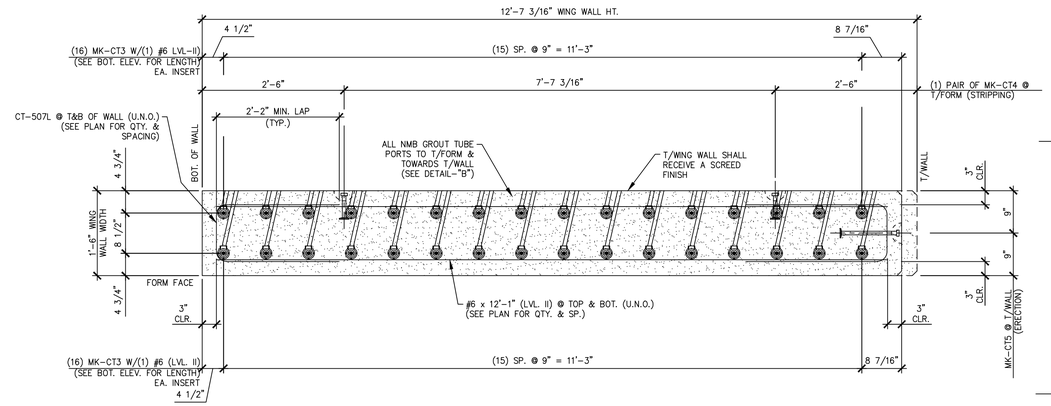


A / WW4 WINGWALL ELEVATION

3/4" = 1'-0"

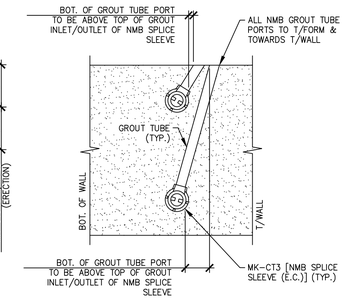


DETAIL - "B"

3/4" = 1'-0"

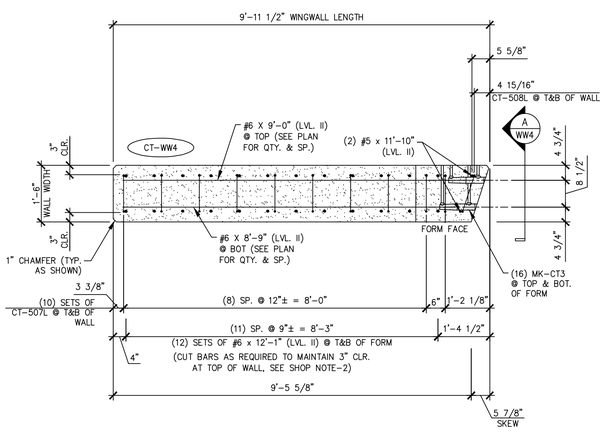


WING WALL BOTTOM ELEVATION

1/2" = 1'-0"

SHOP NOTES:
1. ALL EDGES OF WING WALLS, FORM FACE & T/WALL FACE, SHALL RECEIVE A 1" CHAMFER (UNLESS NOTED OTHERWISE)

2. ENDS OF CUT BARS SHALL BE COATED WITH TOUCH UP PRODUCT SUPPLIED BY THE REBAR MANUFACTURER.

SHOP NOTE:
f'c = 5,000 PSI
f'ci = 3,500 PSI
MIX: #445MSCC

| MARK: CT-WW4 | QTY.: 1 | WT.: 13.59 T | VOL.: 6.71 cy |
|---|---|---|---|

MATERIAL LIST / WINGWALL

| ITEM | MARK | DESCRIPTION | QTY. |
|---|---|---|---|
| 1 | CT-507L | #5 BENT BAR (LEVEL II, DUAL COATED) | 20 |
| 2 | CT-508L | #5 BENT BAR (LEVEL II, DUAL COATED) | 2 |
| 3 | | | |
| 4 | | #5 x 11'-10" (LEVEL II, DUAL COATED) | 2 |
| 5 | | #6 x 12'-1" (LEVEL II, DUAL COATED) | 24 |
| 6 | | #6 x 9'-4" (LEVEL II, DUAL COATED) | 1 |
| 7 | | #6 x 9'-1" (LEVEL II, DUAL COATED) | 1 |
| 8 | | #6 x 9'-0" (LEVEL II, DUAL COATED) | 16 |
| 9 | | #6 x 8'-9" (LEVEL II, DUAL COATED) | 16 |
| 10 | | | |
| 11 | | | |
| 12 | MK-CT3 | NMB SPLICE SLEEVE 6U-X(PG) (EPOXY COATED) | 32 |
| 13 | MK-CT4 | 4T x 7 1/8" SWIFT LIFT LIFTER | 4 |
| 14 | MK-CT5 | 8T x 13 3/8" SWIFT LIFT LIFTER | 2 |
| 15 | | | |

Vermont Agency of Transportation
2015-05-12_Contract BRF 015(10) RR.pdf
RECEIVED
ON: May 6, 2015
and Checked for
CONFORMANCE
BY: Jennifer Fitch DATE: 05/12/2015

SHOP DRAWING REVIEW

X REVIEWED AS REQUIRED BY THE CONSTRUCTION CONTRACT DOCUMENTS AND APPROVED, BUT ONLY FOR CONFORMANCE TO THE DESIGN CONCEPT OF THE WORK, AND SUBJECT TO FURTHER LIMITATIONS AND REQUIREMENTS CONTAINED IN THE CONSTRUCTION CONTRACT DOCUMENTS.

☐ REJECTED ☐ REVISE AND RESUBMIT ☐ FURNISH AS CORRECTED

CORRECTIONS OR COMMENTS MADE ON THE SHOP DRAWINGS DURING THIS REVIEW DO NOT RELIEVE CONTRACTOR FROM COMPLIANCE WITH REQUIRMENTS OF THE DRAWINGS AND SPECIFICATIONS. THIS CHECK IS ONLY FOR REVIEW OF GENERAL CONFORMANCE WITH THE DESIGN CONCEPT OF THE PROJECT AND GENERAL COMPLIANCE WITH THE INFORMATION GIVEN IN THE CONTRACT DOCUMENTS. THE CONTRACTOR IS RESPONSIBLE FOR: CONFIRMING AND CORRELATING ALL QUANTITIES AND DIMENSIONS; SELECTING FABRICATION PROCESSES AND TECHNIQUES OF CONSTRUCTION; COORDINATING HIS WORK WITH THAT OF ALL OTHER TRADES; AND PERFORMING HIS WORK IN A SAFE AND SATISFACTORY MANNER.

vhb
40 IDX Drive
Building 100, Suite 200
South Burlington, VT 05403
802.497.6100

Job Number: 57632.00
Reviewed By: E.F. LAWES
Date: May 11, 2015

J.P. CARRARA & SONS INC.
Precast & Prestress Manufacturer
2464 CASE STR., MIDDLEBURY, VERMONT 05753 Phone:(802)388-6361 Fax:(802)388-9010

SCHULTZ CONSTRUCTION
CONTRACTOR
BALLSTON SPA, NY

STATE OF VERMONT AGENCY OF TRANSPORTATION
COUNTY OF RUTLAND

TOWN OF CASTLETON
VT ROUTE 30 (RURAL MINOR ARTERIAL)
BRIDGE NO.: 93 PROJECT NO.: BRF 015-2(10)

PRECAST WINGWALL DETAILS "CT-WW4"

DATE: MAY 06, 2015
SCALE: NOTED
CHKD: R.M. DFTM: PSS
JOB NO: 23456-015
DWG. NO: WW4

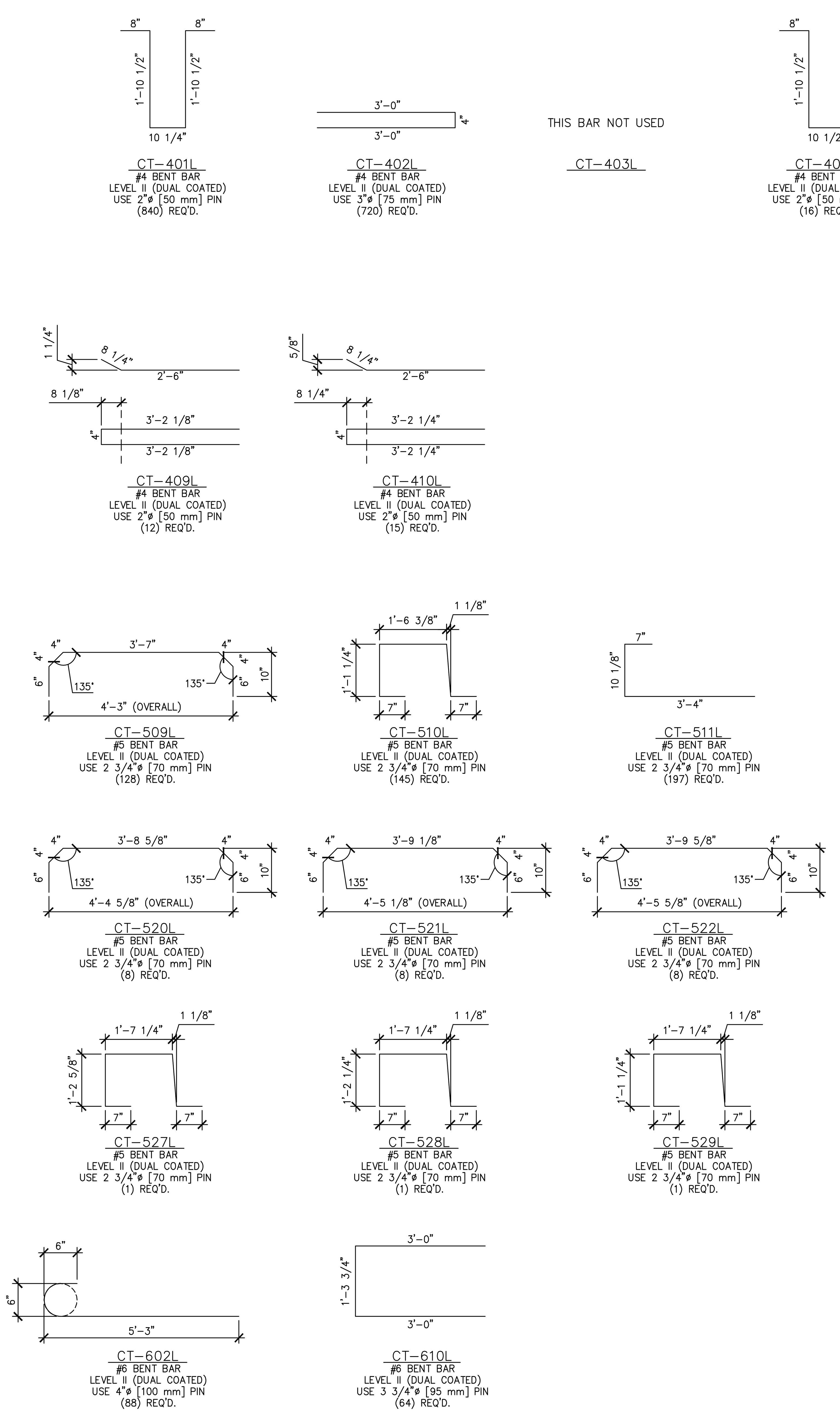


PRESTRESSED NEXT BEAMS

NEXT BEAM MISCELLANEOUS MATERIALS

| ITEM | MARK | QTY. | DESCTIPTION | REMARKS |
|---|---|---|---|---|
| 1 | | 112 | #4 x 8'-1 1/2" (LEVEL II, DUAL COATED) | |
| 2 | | | | |
| 3 | | 976 | #5 x 7'-8 1/2" (LEVEL II, DUAL COATED) | |
| 4 | | 48 | #5 x 7'-9" (LEVEL II, DUAL COATED) | |
| 5 | | 32 | #5 x 7'-10" (LEVEL II, DUAL COATED) | |
| 6 | | 32 | #5 x 7'-11" (LEVEL II, DUAL COATED) | |
| 7 | | 32 | #5 x 8'-0" (LEVEL II, DUAL COATED) | |
| 8 | | 88 | #6 x 66'-9" (W/ (1) 2'-2" STAGGERED LAP) (40' + 28'-11") (LVL. II, DUAL COATED) | |
| 9 | | 6 | #5 x 69'-7" (W/ (1) 2'-2" STAGGERED LAP) (40' + 31'-9") (LVL. II, DUAL COATED) | IN PRECAST CONCRETE CURB CAST AS A SECONDARY POUR |
| 10 | | | | |
| 11 | | | | |
| 12 | | | | |
| 13 | | | | |
| 14 | | | | |
| 15 | | | | |
| 16 | | | | |
| 17 | | | | |
| 18 | | | | |
| 19 | | | | |
| 20 | | | | |
| 21 | | | | |
| 22 | | | | |
| 23 | | | | |
| 24 | | | | |
| 25 | | | | |
| 26 | | | | |
| 27 | | | | |
| 28 | | | | |
| 29 | | | | |
| 30 | | | | |
| 31 | | | | |
| 32 | | | | |
| 33 | | | | |
| 34 | | 16 | SET OF (4) 1/2"ø x 270 KSI STRAND LIFTING LOOPS | |
| 35 | | 16 | 2"ø I.D. PVC SLEEVE | |
| 36 | MK-CT6 | 68 | DAYTON B-16 1/2"ø x 3" LONG COIL LOOP INSERTS (ELECTROPLATED GALV.) | |
| 37 | | 16 | GUARDRAIL ANCHOR PLATE (GALV.) | SUPPLIED BY OTHERS, IN PRECAST CONCRETE CURB CAST AS A SECONDARY POUR |
| 38 | | | | |

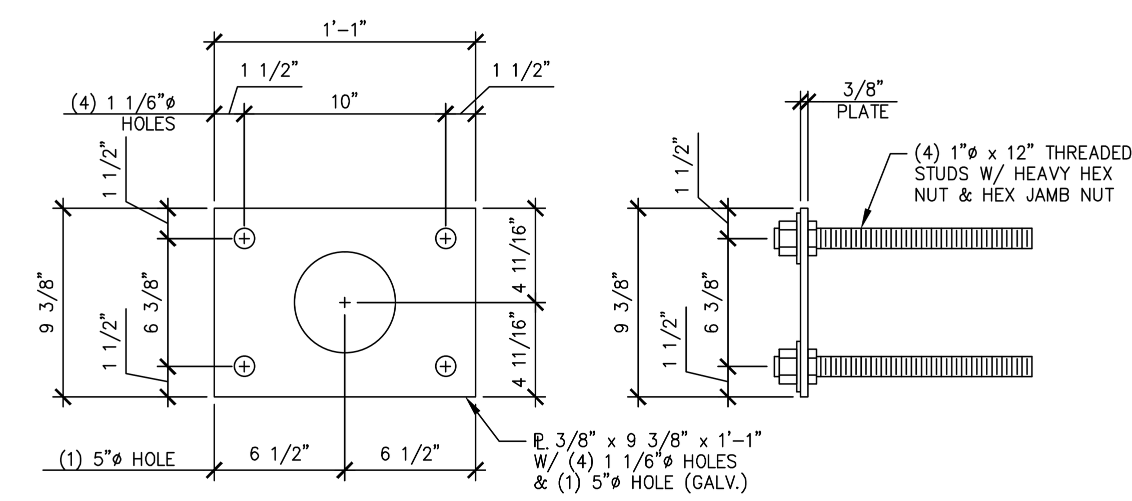


GUARDRAIL ANCHOR PLATE

SUPPLIED BY OTHERS 1 1/2" = 1'-0"

Vermont Agency of Transportation

2015-05-11_Castleton BRF 0152(10) RR.pdf

RECEIVED

ON: May 6, 2015

and Checked for

CONFORMANCE

BY: Jennifer Fitch DATE: 05/12/2015

Revision 1 5.6.15

SHOP DRAWING REVIEW

☐ REVIEWED AS REQUIRED BY THE CONSTRUCTION CONTRACT DOCUMENTS AND APPROVED, BUT ONLY FOR CONFORMANCE TO THE DESIGN CONCEPT OF THE WORK, AND SUBJECT TO FURTHER LIMITATIONS AND REQUIREMENTS CONTAINED IN THE CONSTRUCTION CONTRACT DOCUMENTS.

☐ REJECTED ☒ REVISE AND RESUBMIT ☐ FURNISH AS CORRECTED

CORRECTIONS OR COMMENTS MADE ON THE SHOP DRAWINGS DURING THIS REVIEW DO NOT RELIEVE CONTRACTOR FROM COMPLIANCE WITH REQUIRMENTS OF THE DRAWINGS AND SPECIFICATIONS. THIS CHECK IS ONLY FOR REVIEW OF GENERAL CONFORMANCE WITH THE DESIGN CONCEPT OF THE PROJECT AND GENERAL COMPLIANCE WITH THE INFORMATION GIVEN IN THE CONTRACT DOCUMENTS. THE CONTRACTOR IS RESPONSIBLE FOR: CONFIRMING AND CORRELATING ALL QUANTITIES AND DIMENSIONS; SELECTING FABRICATION PROCESSES AND TECHNIQUES OF CONSTRUCTION; COORDINATING HIS WORK WITH THAT OF ALL OTHER TRADES; AND PERFORMING HIS WORK IN A SAFE AND SATISFACTORY MANNER.

vhb
40 IDX Drive
Building 100, Suite 200
South Burlington, VT 05403
802.497.6100

Job Number: 57632.00
Reviewed By: E.F. LAWES
Date: May 11, 2015

J.P. CARRARA & SONS INC.
Precast & Prestress Manufacturer
2464 CASE STR., MIDDLEBURY, VERMONT 05753 Phone:(802)388-6361 Fax:(802)388-9010

SCHULTZ CONSTRUCTION
CONTRACTOR
BALLSTON SPA, NY

STATE OF VERMONT AGENCY OF TRANSPORTATION
COUNTY OF RUTLAND

TOWN OF CASTLETON
VT ROUTE 30 (RURAL MINOR ARTERIAL)
BRIDGE NO.: 93 PROJECT NO.: BRF 015-2(10)

MATERIALS LIST (NEXT BEAMS)

DATE: MAY 06, 2015
SCALE: NOTED
CHKD: R.M. DFTM: PSS
JOB NO: 23456-015
DWG. NO: M1

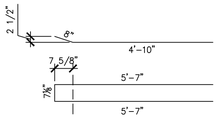


CT-501L
#5 BENT BAR
LEVEL II (DUAL COATED)
USE 2 3/4"ø [70 mm] PIN
(160) REQ'D.

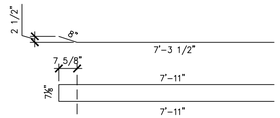


CT-502L
#5 BENT BAR
LEVEL II (DUAL COATED)
USE 2 3/4"ø [70 mm] PIN
(76) REQ'D.

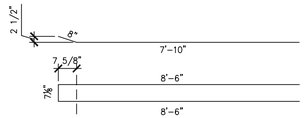


CT-503L
#5 BENT BAR
LEVEL II (DUAL COATED)
USE 2 3/4"ø [70 mm] PIN
(1) REQ'D.

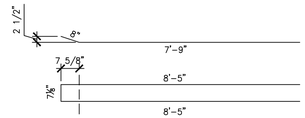


CT-504L
#5 BENT BAR
LEVEL II (DUAL COATED)
USE 2 3/4"ø [70 mm] PIN
(1) REQ'D.

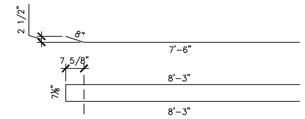


CT-505L
#5 BENT BAR
LEVEL II (DUAL COATED)
USE 2 3/4"ø [70 mm] PIN
(1) REQ'D.

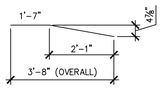


CT-601L
#6 BENT BAR
LEVEL II (DUAL COATED)
USE 4"ø [100 mm] PIN
(2) REQ'D.

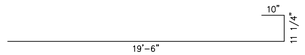


CT-901L
#9 BENT BAR
LEVEL II (DUAL COATED)
USE 6"ø PIN
(80) REQ'D.

## PRECAST APPROACH SLABS

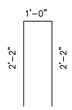


CT-507L
#5 BENT BAR
LEVEL II (DUAL COATED)
USE 2 3/4"ø [70 mm] PIN
(76) REQ'D.

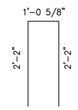


CT-508L
#5 BENT BAR
LEVEL II (DUAL COATED)
USE 2 3/4"ø [70 mm] PIN
(8) REQ'D.

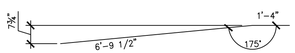


CT-603L
#6 BENT BAR
LEVEL II (DUAL COATED)
USE 4"ø [100 mm] PIN
(1) REQ'D.

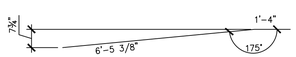


CT-604L
#6 BENT BAR
LEVEL II (DUAL COATED)
USE 4"ø [100 mm] PIN
(1) REQ'D.

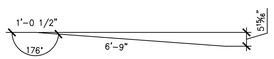


CT-605L
#6 BENT BAR
LEVEL II (DUAL COATED)
USE 4"ø [100 mm] PIN
(1) REQ'D.

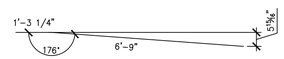


CT-606L
#6 BENT BAR
LEVEL II (DUAL COATED)
USE 4"ø [100 mm] PIN
(1) REQ'D.

## PRECAST WINGWALLS

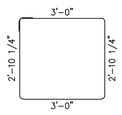


CT-411L
#4 BENT BAR
LEVEL II (DUAL COATED)
USE 2"ø [50 mm] PIN
(66) REQ'D.

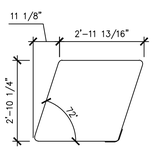


CT-412L
#4 BENT BAR
LEVEL II (DUAL COATED)
USE 2"ø [50 mm] PIN
(92) REQ'D.

CT-513L
#5 BENT BAR
LEVEL II (DUAL COATED)
USE 2 3/4"ø [70 mm] PIN
(56) REQ'D.

CT-514L
#5 BENT BAR
LEVEL II (DUAL COATED)
USE 2 3/4"ø [70 mm] PIN
(18) REQ'D.

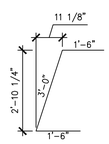


CT-515L
#5 BENT BAR
LEVEL II (DUAL COATED)
USE 2 3/4"ø [70 mm] PIN
(16) REQ'D.

CT-516L
#5 BENT BAR
LEVEL II (DUAL COATED)
USE 2 3/4"ø [70 mm] PIN
(4) REQ'D.

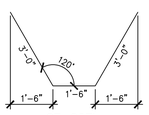


CT-607L
#6 BENT BAR
LEVEL II (DUAL COATED)
USE 4"ø [100 mm] PIN
(24) REQ'D.

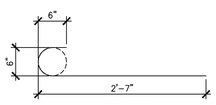


CT-608L
#6 BENT BAR
LEVEL II (DUAL COATED)
USE 4"ø [100 mm] PIN
(66) REQ'D.

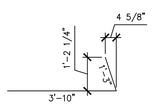


CT-609L
#6 BENT BAR
LEVEL II (DUAL COATED)
USE 4"ø [100 mm] PIN
(126) REQ'D.

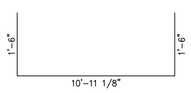


CT-614L
#6 BENT BAR
LEVEL II (DUAL COATED)
USE 4"ø [100 mm] PIN
(4) REQ'D.

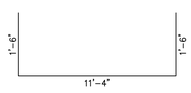


CT-615L
#6 BENT BAR
LEVEL II (DUAL COATED)
USE 4"ø [100 mm] PIN
(8) REQ'D.

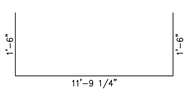


CT-616L
#6 BENT BAR
LEVEL II (DUAL COATED)
USE 4"ø [100 mm] PIN
(4) REQ'D.

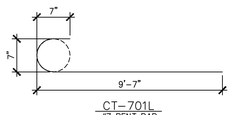


CT-701L
#7 BENT BAR
LEVEL II (DUAL COATED)
USE 5"ø PIN
(150) REQ'D.

## PRECAST ABUTMENTS

Vermont Agency of Transportation

2015-05-11_Castleton BRF 015(10) RR.pdf

RECEIVED

ON: May 6, 2015

and Checked for

CONFORMANCE

BY: Jennifer Fitch DATE: 05/12/2015

## SHOP DRAWING REVIEW

☒ REVIEWED AS REQUIRED BY THE CONSTRUCTION CONTRACT DOCUMENTS AND APPROVED, BUT ONLY FOR CONFORMANCE TO THE DESIGN CONCEPT OF THE WORK, AND SUBJECT TO FURTHER LIMITATIONS AND REQUIREMENTS CONTAINED IN THE CONSTRUCTION CONTRACT DOCUMENTS.

☐ REJECTED ☐ REVISE AND RESUBMIT ☐ FURNISH AS CORRECTED

CORRECTIONS OR COMMENTS MADE ON THE SHOP DRAWINGS DURING THIS REVIEW DO NOT RELIEVE CONTRACTOR FROM COMPLIANCE WITH REQUIRMENTS OF THE DRAWINGS AND SPECIFICATIONS. THIS CHECK IS ONLY FOR REVIEW OF GENERAL CONFORMANCE WITH THE DESIGN CONCEPT OF THE PROJECT AND GENERAL COMPLIANCE WITH THE INFORMATION GIVEN IN THE CONTRACT DOCUMENTS. THE CONTRACTOR IS RESPONSIBLE FOR: CONFIRMING AND CORRELATING ALL QUANTITIES AND DIMENSIONS; SELECTING FABRICATION PROCESSES AND TECHNIQUES OF CONSTRUCTION; COORDINATING HIS WORK WITH THAT OF ALL OTHER TRADES; AND PERFORMING HIS WORK IN A SAFE AND SATISFACTORY MANNER.

vhb
40 IDX Drive
Building 100, Suite 200
South Burlington, VT 05403
802.497.6100

Job Number: 57632.00
Reviewed By: E.F. LAWES
Date: May 11, 2015

## APPROACH SLAB MISCELLANEOUS MATERIALS

| ITEM | MARK | QTY. | DESCTIPTION | REMARKS |
|---|---|---|---|---|
| 1 | | 64 | #6 x 19'-6" (LEVEL II, DUAL COATED) | |
| 2 | | | | |
| 3 | MK-CT1 | 24 | 4T x 7 1/8" SWIFT LIFT LIFTER | |
| 4 | | | | |
| 5 | | 40 | 4" O.D. x 1'-3" PVC SLEEVE | |

## WINGWALLS MISCELLANEOUS MATERIALS

| ITEM | MARK | QTY. | DESCTIPTION | REMARKS |
|---|---|---|---|---|
| 1 | | 2 | #5 x 10'-11" (LEVEL II, DUAL COATED) | |
| 2 | | 4 | #5 x 11'-6" (LEVEL II, DUAL COATED) | |
| 3 | | 2 | #5 x 11'-10" (LEVEL II, DUAL COATED) | |
| 4 | | 29 | #6 x 7'-9" (LEVEL II, DUAL COATED) | |
| 5 | | 29 | #6 x 8'-0" (LEVEL II, DUAL COATED) | |
| 6 | | 16 | #6 x 8'-9" (LEVEL II, DUAL COATED) | |
| 7 | | 16 | #6 x 9'-0" (LEVEL II, DUAL COATED) | |
| 8 | | 1 | #6 x 9'-1" (LEVEL II, DUAL COATED) | |
| 9 | | 16 | #6 x 9'-3" (LEVEL II, DUAL COATED) | |
| 10 | | 1 | #6 x 9'-4" (LEVEL II, DUAL COATED) | |
| 11 | | 16 | #6 x 9'-6" (LEVEL II, DUAL COATED) | |
| 12 | | 1 | #6 x 9'-7" (LEVEL II, DUAL COATED) | |
| 13 | | 1 | #6 x 9'-10" (LEVEL II, DUAL COATED) | |
| 14 | | 22 | #6 x 10'-11" (LEVEL II, DUAL COATED) | |
| 15 | | 22 | #6 x 11'-6" (LEVEL II, DUAL COATED) | |
| 16 | | 26 | #6 x 11'-8" (LEVEL II, DUAL COATED) | |
| 17 | | 24 | #6 x 12'-1" (LEVEL II, DUAL COATED) | |
| 18 | MK-CT3 | 126 | NMB SPLICE SLEEVE 6U-X(PG) (EPOXY COATED) | |
| 19 | MK-CT4 | 16 | 4T x 7 1/8" SWIFT LIFT LIFTER | |
| 20 | MK-CT5 | 8 | 8T x 13 3/8" SWIFT LIFT LIFTER | |
| 21 | | 1 | BRIDGE PLAQUE (SUPPLIED BY OTHERS) | |

## ABUTMENT MISCELLANEOUS MATERIALS

| ITEM | MARK | QTY. | DESCTIPTION | REMARKS |
|---|---|---|---|---|
| 1 | | 4 | #8 x 22'-1" (LEVEL II, DUAL COATED) | |
| 2 | | 4 | #8 x 21'-2" (LEVEL II, DUAL COATED) | |
| 3 | | 11 | #7 x 11'-10" (LEVEL II, DUAL COATED) | |
| 4 | | 22 | #7 x 11'-6" (LEVEL II, DUAL COATED) | |
| 5 | | 11 | #7 x 10'-11" (LEVEL II, DUAL COATED) | |
| 6 | | 29 | #7 x 9'-9" (LEVEL II, DUAL COATED) | |
| 7 | | 29 | #7 x 9'-3" (LEVEL II, DUAL COATED) | |
| 8 | | 4 | #6 x 11'-10" (LEVEL II, DUAL COATED) | |
| 9 | | 8 | #6 x 11'-6" (LEVEL II, DUAL COATED) | |
| 10 | | 4 | #6 x 10'-11" (LEVEL II, DUAL COATED) | |
| 11 | | 35 | #5 x 22'-1" (LEVEL II, DUAL COATED) | |
| 12 | | 35 | #5 x 21'-2" (LEVEL II, DUAL COATED) | |
| 13 | | | | |
| 14 | | | | |
| 15 | | | | |
| 16 | | | | |
| 17 | | 1 | 2'-0" ø x 9'-0 1/16" CORRUGATED STEEL PIPE (GALV.) | |
| 18 | | 1 | 2'-0" ø x 8'-11 13/16" CORRUGATED STEEL PIPE (GALV.) | |
| 19 | | 1 | 2'-0" ø x 8'-11 7/16" CORRUGATED STEEL PIPE (GALV.) | |
| 20 | | 1 | 2'-0" ø x 8'-10 13/16" CORRUGATED STEEL PIPE (GALV.) | |
| 21 | | 1 | 2'-0" ø x 8'-9 7/16" CORRUGATED STEEL PIPE (GALV.) | |
| 22 | | 1 | 2'-0" ø x 8'-7 1/16" CORRUGATED STEEL PIPE (GALV.) | |
| 23 | | 1 | 2'-0" ø x 8'-6 13/16" CORRUGATED STEEL PIPE (GALV.) | |
| 24 | | 1 | 2'-0" ø x 8'-6 3/16" CORRUGATED STEEL PIPE (GALV.) | |
| 25 | | 1 | 2'-0" ø x 8'-5 13/16" CORRUGATED STEEL PIPE (GALV.) | |
| 26 | | 1 | 2'-0" ø x 8'-5 9/16" CORRUGATED STEEL PIPE (GALV.) | |
| 27 | | 1 | 2'-0" ø x 8'-3 7/16" CORRUGATED STEEL PIPE (GALV.) | |
| 28 | | 1 | 2'-0" ø x 8'-1 1/16" CORRUGATED STEEL PIPE (GALV.) | |
| 29 | MK-CT2 | 8 | 20T x 19 3/4" SWIFT LIFT LIFTER | |
| 30 | | 48 | 1/2"ø SINGLE USE STRESSING CHUCK (GALV.) | FOR ERECTION |
| 31 | EM-CT1 | 24 | PL. 1" x 6" x 6" W/(2) 3/4"ø HOLES (GALV.) | FOR ERECTION, SEE DETAIL THIS SHEET |
| 32 | | 24 | 1/2"ø x 47'-0" POLY-STRAND | FOR ERECTION |
| 33 | | | | |
| 34 | | | | |

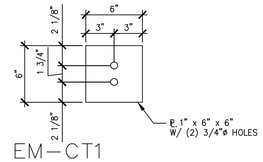


EM-CT1

1 1/2" = 1'-0"

1

Revision 1 5-6-15

APPROVAL STAMP:

J.P. CARRARA & SONS INC.
Precast & Prestress Manufacturer
2464 CASE STR., MIDDLEBURY, VERMONT 05753 Phone:(802)388-6361 Fax:(802)388-9010

SCHULTZ CONSTRUCTION
CONTRACTOR
BALLSTON SPA, NY

STATE OF VERMONT AGENCY OF TRANSPORTATION
COUNTY OF RUTLAND

TOWN OF CASTLETON
VT ROUTE 30 (RURAL MINOR ARTERIAL)
BRIDGE NO.: 93 PROJECT NO.: BRF 015-2(10)

MATERIALS LIST
(ABUTMENTS, WING WALLS & APPROACH SLABS)

DATE: MAY 06, 2015
SCALE: NOTED
CHKD: R.M. DFTM: PSS
JOB NO: 23456-015
DWG. NO: M2