PO Box 2620
Ballston Spa, NY 12020
Ph : 518 885-0060

Letter of Transmittal

To: Chris Williams
VTRANS
61 VALLEY VIEW
MENDON, VT 05701
Ph: (802)786-3812 Fax: (802)786-3810

Subject: Submittal

Transmittal #: 7
Date: 3/11/2015
Job: M117 VTRANS CASTLETON BRF 015-2(10)

WE ARE SENDING YOU ☑ Attached ☐ Under separate cover via the following items:

☑ Shop drawings ☐ Prints ☐ Plans ☐ Samples
☐ Copy of letter ☐ Change order ☐ Specifications ☐ Other

Document Type	Copies	Date	No.	Description
Submittal	1		505.35-7 Rev 1	Permenant Sheet Piling

THESE ARE TRANSMITTED as checked below:

☑ For approval ☐ Approved as submitted ☑ Resubmit ___ copies for approval
☑ For your use ☐ Approved as noted ☐ Submit ___ copies for distribution
☑ As requested ☐ Returned for corrections ☐ Return ___ corrected prints
☑ For review and comment ☐ Other
☐ FOR BIDS DUE ☐ PRINTS RETURNED AFTER LOAN TO US

Remarks: PLease see attached revised Sheet Piling submission from our sub H B Fleming

Copy To: Jennifer Fitch (VTRANS), KEVIN TURE (W.M. SCHULTZ CONSTRUCTION)

From: MIKE GARN (W.M. SCHULTZ CONSTRUCTION **Signature:** Mike Garn

If enclosures are not as noted, kindly notify us at once.

PO Box 2620
Ballston Spa, NY 12020
Ph : 518 885-0060

Submittal

Job: M117
VTRANS CASTLETON BRF 015-2(10)
Castleton BRF 015-2
Route 30
Castleton, VT

Spec Section No: 505.35
Submittal No: 7
Revision No: 1
Sent Date: 3/11/2015

Spec Section Title:

Submittal Title: Permenant Sheet Piling

Contractor:
W.M. Schultz Construction, Inc

Contractor's Stamp
SCHULTZ CONSTRUCTION, INC.
CONTRACT NO. BRF 015 - 2(10)
SUBMITTAL TITLE Sheet Piling
ITEM & SECT. NO. 505. 35
LOCATION OF WORK VT RT 30
SUB NO. 7 DATE 3/11/15
REVIEWED BY MG

VTRANS
Chris Williams

Architect's Stamp

Engineer's Stamp

H. B. FLEMING, INC.
Contracting & Engineering
89 Pleasant Avenue
South Portland, ME 04106

Phone (207) 799-8514

LETTER OF TRANSMITTAL

DATE: 3/10/15
JOB NO.:

TO: SCHULTZ CONSTRUCTION
ATTN: MIKE GARN
KEVIN TURE

ATTENTION:

RE: M117 VTRANS CASTLETON BRF-015-2(10)
PERMENANT STEEL SHEETING

WE ARE SENDING YOU ☒ Attached ☐ Under separate cover via _____ the following items:

☒ Shop drawings ☒ Prints ☐ Plans ☐ Samples ☐ Specifications
☐ Copy of letter ☐ Change order ☐ _____

COPIES	DATE	NO.	DESCRIPTION
1	3/10/15	1	PLAN VIEW PERMENANT SHEET PILING LAYOUT
1	3/10/15	1	SKZ 20 CUT SHEET
1	3/10/15	1	SKZ 20 CORNER CUT SHEET
1	3/10/15	1	SKZ 20 CORNER FABRICATION DETAILS
1	3/10/15	1	SHEET PILE INSTALLATION PLAN

THESE ARE TRANSMITTED as checked below:

☒ For approval ☐ Approved as submitted ☐ Resubmit _____ copies for approval
☐ For your use ☐ Approved as noted ☐ Submit _____ copies for distribution
☐ As requested ☐ Returned for corrections ☐ Return _____ corrected prints
☐ For review and comment ☐ _____
☐ FOR BIDS DUE _____ ☐ PRINTS RETURNED AFTER LOAN TO US

REMARKS

MIKE,
HERE IS OUR REVISED SUBMITTAL FOR THE CASTLETON BRIDGE PROJECT. FEEL FREE TO CALL W/ ANY QUESTIONS

THANKS

COPY TO _____

SIGNED: _____

If enclosures are not as noted, kindly notify us at once.

H.B. FLEMING, INC.

CONTRACTING · ENGINEERING

89 Pleasant Ave. South Portland, ME 04106

Phone 207-799-8514 Fax 207-799-8538

www.hbfleming.com

PILE DRIVING BRIDGES SUBMARINE PIPELINES

Sheet Pile Installation Plan

BRF 015-2(10)

Castleton, VT

Equipment

- Crane
  - Either a 60-ton or an 80-ton lattice boom crawler crane will be used on this project.
  - A minimum of 120' of boom will used.
- Vibratory Hammer
  - A vibratory hammer will be used to install the sheet piles.
  - Depending upon the difficulty of driving, a hammer with either 1,300 in-lb or 2,600 in-lb will be used.
- Driving Template
  - A pre-fabricated driving template will be used to maintain proper alignment/location of the sheet piles during driving.
  - The templates will be fixed in position with "spud" piles.
- Pile
  - The proposed sheet piles are SKZ-20 sections with a section modulus of 31.69 in^3. We have included a manufacturer's cut sheet with our submittal for reference.

Installation Sequence

- In general, our intent is to install the sheet piles directly adjacent to the (to be) de-energized lines first.
- Installation of sheet piles will continue from the west to the east in order to help ensure the corners of the sheet pile walls are installed in the proposed locations.
- The sequence for installing and individual pair of sheet piles will consist of the following:
  - The sheet piles will be threaded into the interlock of a previously driven pair of sheet piles and butted up to a driving template that defines the proposed line of the wall.
  - The vibratory hammer will be clamped to the sheet piles and the sheets will be driven as a pair.
  - If difficult driving ensues, the sheets will be driven individually in an effort to maximize energy transfer from the hammer.
  - Once the sheet piles have been installed to within approximately 4" of proposed grade, the sheet pile wall will be cut off to grade.

SCZ/SKZ Cold Formed Steel Sheet Pile

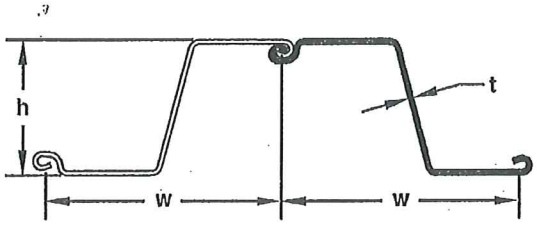

SECTION	Width (w) in (mm)	Height (h) in (mm)	Thickness (t) in (mm)	Cross Sectional Area in²/ft (cm²/m)	WEIGHT Pile lb/ft (kg/m)	WEIGHT Wall lb/ft² (kg/m²)	SECTION MODULUS Elastic in³/ft (cm³/m)	SECTION MODULUS Plastic in³/ft (cm³/m)	Moment of Inertia in⁴/ft (cm⁴/m)	COATING AREA Both Sides ft²/ft (m²/m)	COATING AREA Coating Area ft²/ft² (m²/m²)
SCZ 14	28.50 723.9	10.00 254.0	0.250 6.4	4.18 88.48	33.81 50.31	14.23 69.50	14.36 772	16.32 877.4	71.82 9808	6.10 1.86	1.28 1.28
SCZ 16	28.50 723.9	10.00 254.0	0.276 7.0	4.62 97.79	37.37 55.61	15.73 76.82	15.75 847	17.97 965.9	78.73 10751	6.10 1.86	1.28 1.28
SCZ 17N	28.50 723.9	10.00 254.0	0.295 7.5	4.95 104.78	40.03 59.58	16.86 85.79	16.87 907	19.21 1033	84.35 11519	6.10 1.86	1.28 1.28
SCZ 18N	28.50 723.9	10.00 254.0	0.317 8.1	5.31 112.39	42.94 63.91	18.08 85.79	18.10 973	20.61 1108	90.48 12356	6.10 1.86	1.28 1.28
SCZ 21N	28.50 723.9	10.00 254.0	0.375 9.5	6.29 133.06	50.84 75.66	21.41 85.79	21.43 1152	24.40 1312	107.13 14629	6.10 1.86	1.28 1.28
SKZ 20	28.50 723.9	16.00 406.4	0.315 8.0	6.00 136.20	48.24 71.79	20.31 99.17	31.69 1704	36.66 1970.97	253.51 34618	7.60 2.32	1.60 1.60
SKZ 22	28.50 723.9	16.00 406.4	0.335 8.5	6.30 145.40	51.30 76.34	21.60 105.46	33.43 1797	38.94 2093.55	267.40 36515	7.60 2.32	1.60 1.60
SKZ 23	28.50 723.9	16.00 406.4	0.354 9.0	6.70 162.50	54.20 80.66	22.82 111.42	35.61 1915	41.12 2210.75	284.90 38905	7.60 2.32	1.60 1.60
SKZ 24	28.50 723.9	16.00 406.4	0.375 9.5	7.10 179.50	57.43 85.47	24.18 118.06	37.73 2028	43.52 2339.78	301.80 41213	7.60 2.32	1.60 1.60
SKZ 25	28.50 723.9	16.00 406.4	0.399 10.1	7.60 188.00	61.10 90.93	25.73 125.61	40.14 2158	46.24 2486.02	321.12 43851	7.60 2.32	1.60 1.60
SKZ 31	28.50 723.9	18.00 457.2	0.450 11.4	9.07 192.04	73.82 109.85	31.08 151.75	51.56 2772	60.51 3253.29	464.05 63369	8.06 2.46	1.70 1.70
SKZ 33	28.50 723.9	18.00 457.2	0.475 12.1	9.40 198.97	77.64 115.54	32.69 159.61	54.89 2951	63.57 3417.68	494.03 67462	8.06 2.46	1.70 1.70
SKZ 34	28.50 723.9	18.00 457.2	0.500 12.7	9.89 209.25	81.42 121.17	34.28 167.38	57.62 3098	66.86 3594.60	518.62 70821	8.06 2.46	1.70 1.70
SKZ 36	28.50 723.9	18.00 457.2	0.535 13.6	10.78 228.10	86.81 129.19	36.55 178.46	60.71 3264	71.58 3848.17	546.43 74619	8.06 2.46	1.70 1.70
SKZ 38	28.50 723.9	18.00 457.2	0.550 14.0	11.07 234.42	88.95 132.37	37.45 182.85	62.32 3350	73.52 3952.44	560.85 76588	8.06 2.46	1.70 1.70

Interlock Compatibility

	SCZ 14	SCZ 16	SCZ 17N	SCZ 18N	SCZ 21N	SKZ 20	SKZ 22	SKZ 23	SKZ 24	SKZ 25	SKZ 31	SKZ 33	SKZ 34	SKZ 36	SKZ 38
SCZ 14	●	●	●	●	●	●	●	●	●	●	○	○	○	○	○
SCZ 16	●	●	●	●	●	●	●	●	●	●	○	○	○	○	○
SCZ 17N	●	●	●	●	●	●	●	●	●	●	○	○	○	○	○
SCZ 18N	●	●	●	●	●	●	●	●	●	●	○	○	○	○	○
SCZ 21N	●	●	●	●	●	●	●	●	●	●	○	○	○	○	○
SKZ 20	●	●	●	●	●	●	●	●	●	●	○	○	○	○	○
SKZ 22	●	●	●	●	●	●	●	●	●	●	○	○	○	○	○
SKZ 23	●	●	●	●	●	●	●	●	●	●	○	○	○	○	○
SKZ 24	●	●	●	●	●	●	●	●	●	●	○	○	○	○	○
SKZ 25	●	●	●	●	●	●	●	●	●	●	○	○	○	○	○
SKZ 31	○	○	○	○	○	○	○	○	○	○	●	●	●	●	●
SKZ 33	○	○	○	○	○	○	○	○	○	○	●	●	●	●	●
SKZ 34	○	○	○	○	○	○	○	○	○	○	●	●	●	●	●
SKZ 36	○	○	○	○	○	○	○	○	○	○	●	●	●	●	●
SKZ 38	○	○	○	○	○	○	○	○	○	○	●	●	●	●	●

● Interlock compatible ○ Interlock not compatible

30'-6" minimum length

SKZ

SKZ Cold Formed Steel Sheet Pile

Available Steel Grades					
ASTM	YIELD STRENGTH		ASTM	YIELD STRENGTH	
	(ksi)	(MPa)		(ksi)	(MPa)
A 572 Grade 50	50	345	A 572 Grade 65 (Mod)**	80	555
A 572 Grade 55	55	380	A 588	50	345
A 572 Grade 60	60	415	A 690	50	345
A 572 Grade 65*	65	450			

*Not available for thicknesses ≥ 0.375" (9.525mm). **Not available for thicknesses > 0.276" (7.0mm).

Corner Piles

B2 Corner Pile B3 Corner Pile

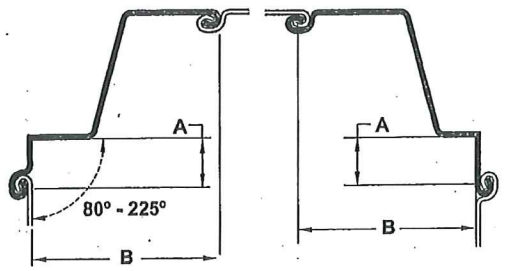

SKZ 20- SKZ 38
A = 5.0 Inches (127.0 mm)
B =23.5 Inches (596.9 mm)

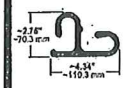

CFC 90*
12.00 lb/ft
(17.9 kg/m)

CF Tee*
17.07 lb/ft
(25.4 kg/m)

CF*
7.46 lb/ft
(11.1 kg/m)

V 20*
8.85 lb/ft
(13.2 kg/m)

30'-6" minimum length

Delivery Conditions & Tolerances

	ASTM A6		EN 10249-2	
Mass	± 2.5%		± 7%	
Length	+ 5 inches	– 0 inches	± 50 mm	
Straightness				
Bending (S)			0.25% of the length	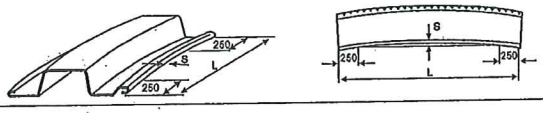
Curving (C)			0.25% of the length	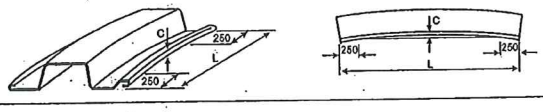
Twisting (V)			2% of the length	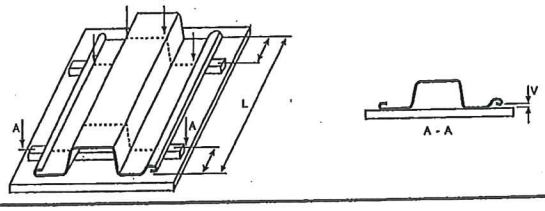

Maximum Rolled Lengths†

SKZ	70 feet	(21.3 m)

† Longer lengths may be possible upon request.
* Covered by one or more patents owned by PilePro, LLC (www.pilepro.com)

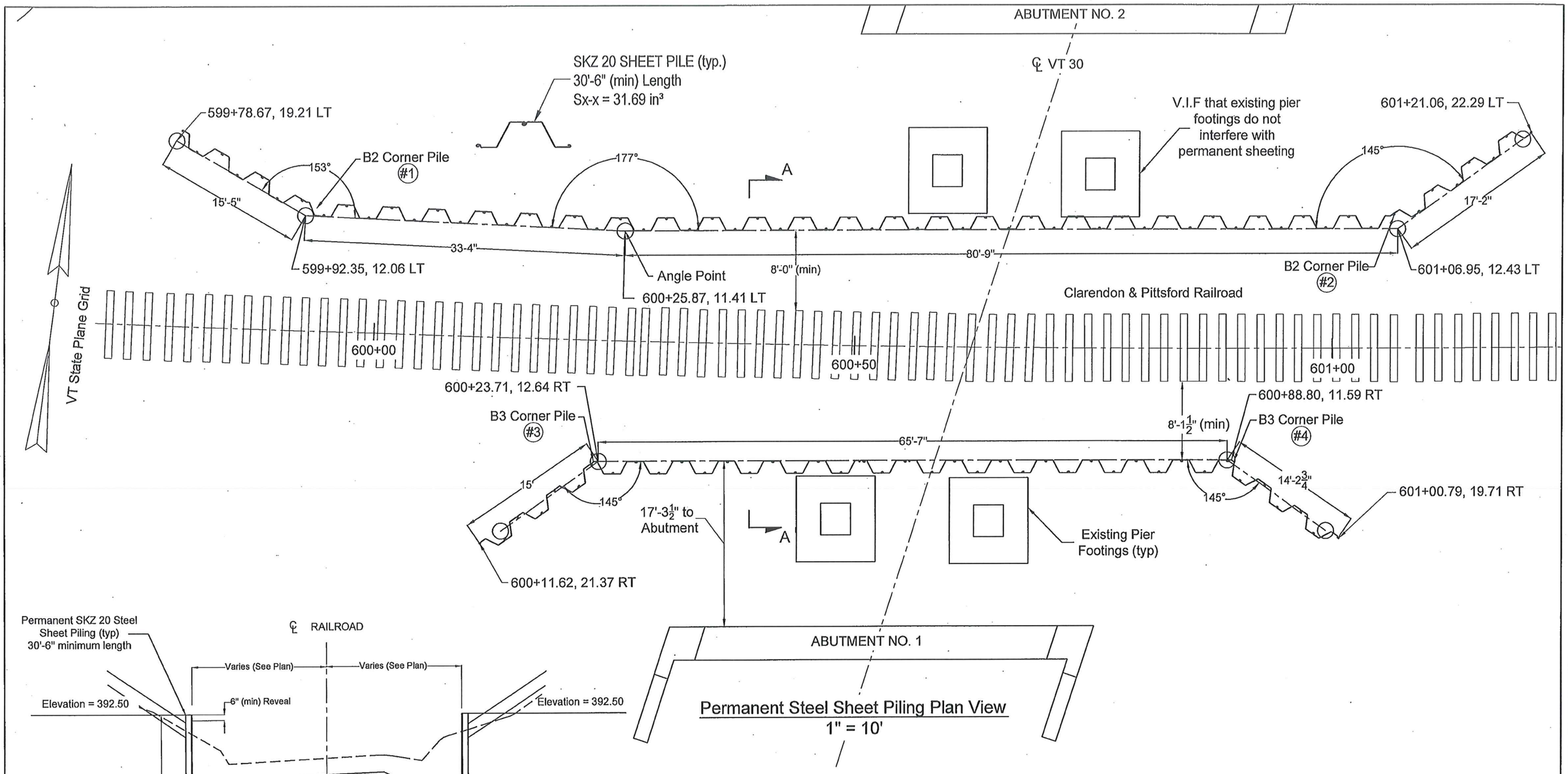

Permanent Steel Sheet Piling Plan View
1" = 10'

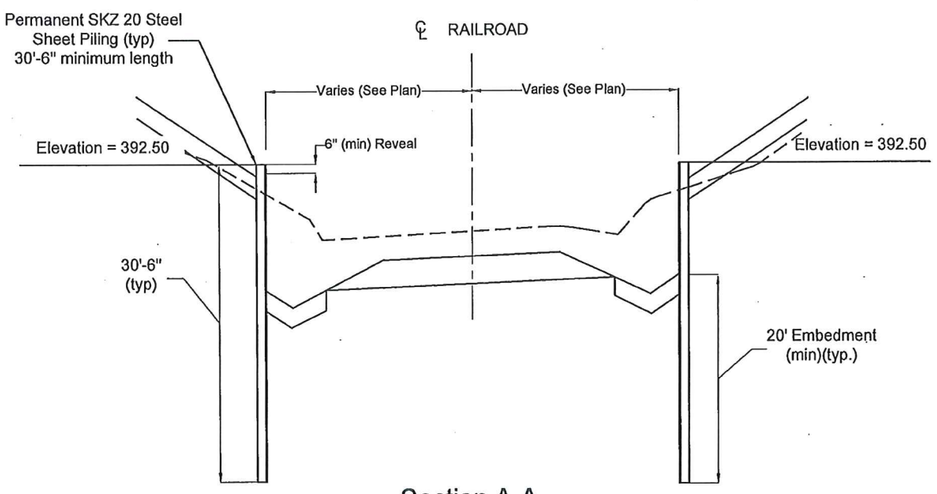

Section A-A
NTS

VAOT Project No. BRF 015-2 (10)

H.B. FLEMING
89 PLEASANT AVENUE
SO. PORTLAND, ME 04106
P: 207-799-8514 F: 207-799-8538
www.hbfleming.com

TITLE:	Permanent Sheet Piling Layout
PROJECT:	VAOT Bridge #93 Replacement
LOCATION:	Castleton, VT
DATE:	03/10/15
SCALE:	As Noted

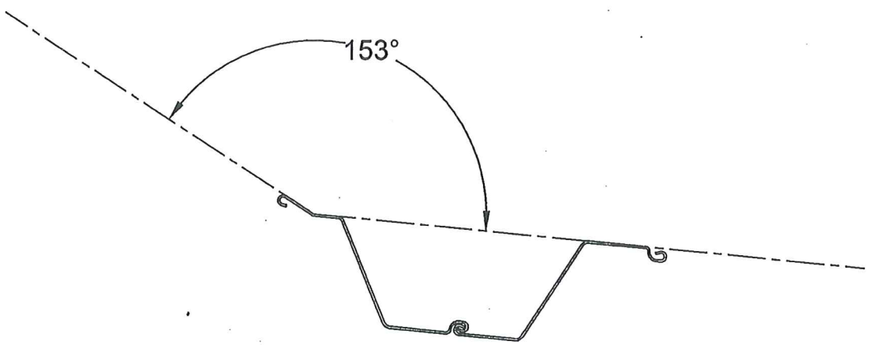

30.5' Long SKZ-20 Corner No. 1 - B3
NTS

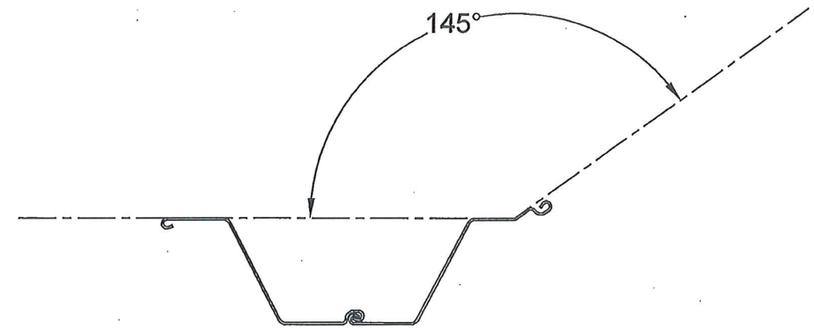

30.5' Long SKZ-20 Corner No. 2 - B2
NTS

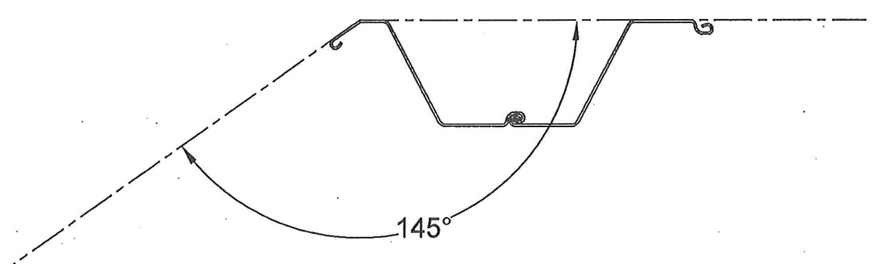

30.5' Long SKZ-20 Corner No. 3 - B3
NTS

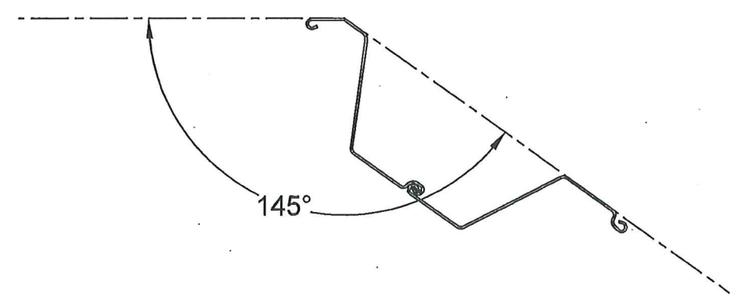

30.5' Long SKZ-20 Corner No. 4 - B3
NTS

Bridge No. 93

VAOT Project No. BRF 015-2 (10)

H.B. FLEMING
89 PLEASANT AVENUE
SO. PORTLAND, ME 04106
P: 207-799-8514 F: 207-799-8538
www.hbfleming.com

TITLE:	SKZ-20 Corner Fabrication Detail(s)
PROJECT:	VAOT Bridge Replacement
LOCATION:	Castleton, VT
DATE:	03/10/15
SCALE:	As Noted