PO Box 2620
Ballston Spa, NY 12020
Ph : 518 885-0060

SCHULTZ

Letter of Transmittal

To: CHRIS WILLIAMS
VERMONT AGENCY OF TRANSPORTATI
61 VALLEY VIEW
MENDON, VT 05701
Ph: (802)786-3812 Fax: (802)786-3810

Transmittal #: 11
Date: 4/17/2015
Job: M117 VTRANS CASTLETON BRF 015-2(10)

Subject: Submittal

WE ARE SENDING YOU ☐ Attached ☐ Under separate cover via the following items:

☑ Shop drawings ☐ Prints ☐ Plans ☐ Samples
☐ Copy of letter ☐ Change order ☐ Specifications ☐ Other

Document Type	Copies	Date	No.	Description
Submittal	1		900.640-9 Rev 0	Next Beams

THESE ARE TRANSMITTED as checked below:

☑ For approval ☐ Approved as submitted ☐ Resubmit ___ copies for approval
☑ For your use ☐ Approved as noted ☐ Submit ___ copies for distribution
☑ As requested ☐ Returned for corrections ☐ Return ___ corrected prints
☑ For review and comment ☐ Other
☐ FOR BIDS DUE ☐ PRINTS RETURNED AFTER LOAN TO US

Remarks: Please find attached submittal from our supplier J P Carrara for the Castleton Next Beams

Copy To: Jennifer Fitch (VTRANS), KEVIN TURE (W.M. SCHULTZ CONSTRUCTION)

From: MIKE GARN (W.M. SCHULTZ CONSTRUCTION **Signature:** _____

If enclosures are not as noted, kindly notify us at once.

SCHULTZ

PO Box 2620
Ballston Spa, NY 12020
Ph : 518 885-0060

Submittal

Job: M117
VTRANS CASTLETON BRF 015-2(10)
Castleton BRF 015-2
Route 30
Castleton, VT

Spec Section No: 900.640
Submittal No: 9
Revision No: 0
Sent Date: 4/17/2015

Spec Section Title:

Submittal Title: Next Beams

Contractor:
W.M. Schultz Construction, Inc

Contractor's Stamp

SCHULTZ CONSTRUCTION, INC.
CONTRACT NO. BRF 015-2 (10)
SUBMITTAL TITLE Next Beams
ITEM & SECT. NO. 900.640
LOCATION OF WORK VT RT 30
SUB NO. 9 DATE 4/17/15
REVIEWED BY MG

Vermont Agency of Transportati
CHRIS WILLIAMS

Architect's Stamp

Engineer's Stamp

LETTER OF TRANSMITTAL

TRANSMITTAL # 2

J.P. CARRARA & SONS, INC.
2464 CASE ST
MIDDLEBURY, VT 05753
T: 802.388.6363
F: 802.388.9010

DATE:	4.17.15	**JOB #**	23456-015
ATTN:	Kevin Ture/Mike Garn		
RE:	Castleton Bridge/BRF015-2(10)		

We are sending you:

Shop Drawings		Change Order		Copy of Letter	
Plans		Attached	x	Separate Cover	
Prints		Specifications		(Via)	
Samples		Other:	RFI 1		

Copies	*Date*	*Qty.*	*Description*
1	4.17.15	1	Castleton Shop Drawings
1	4.17.15	1	Castleton Lifting Calculations

These are transmitted as checked below:

For approval	x	Approved as submitted		Submit	
For your use		Approved as noted		Resubmit	
As requested		Returned /Notation		Return	
For review	x	Loaned Prints/Returned		Other	

Remarks:

Please see attached Castleton shop drawings and lifting calculations for approval.

Please consider an expeditious review of components requiring LVL II reinforcement (Dual Coated / Z Bar) as there is currently a one month production lead time on Zbar/Rebar products.

Specification subsections 510.04(b)(7) and 540.04(b)(7) allow for the use of the previously submitted mixes in lieu of submitting additional mix designs. **Please advise if previously approved mix designs must be resubmitted.**

Copy to:

Signed:

Joe Gallese-PM

If enclosures are not as noted, please notify us immediately.

LIFT LOOP/LIFT INSERT DESIGN CALCULATIONS (WORK W/ CARRARA SHOP DWGS)

CASTLETON BRIDGE
JPC # 23456-015

APPROACH SLABS: $f'_c = 4000$ PSI $f'_{ci} = 3500$ PSI △ 3-26-15 EJB

WT = 13.48 T = 26.95 K

THERE ARE (4) LIFT POINTS

LOAD/LIFT POINT = 26.95/4 = 6.74 K

FROM ATTACHED PRODUCT LITERATURE, p 28

USE 4 T x 7 1/8" S.L. SWL (4:1 S.F.) = 8000 LB > 6.74 K, O.K.

(LOCATE APPROX. 1/5 POINTS EACH WAY; CENTER LIFTER PATTERN ON C.G. OF APPROACH SLABS.)

NEXT 28D BEAMS: $f'_c = 10000$ PSI $f'_{ci} = 7500$ PSI

HEAVIEST BM WT = 56.90 T = 113.8 K (BEAMS W/ CURBS)

THERE ARE (4) LIFT POINTS

MAX LOAD/LIFT POINT = $\frac{113.8}{2} \times \left(\frac{2'-6" + 5\frac{11}{16}"}{5'-0"}\right) = 33.8$ K

C.G. 15 5 11/16" FROM ℄ BM DUE TO CURB

SEE SHT 3

ASSUMING 1/4 OF SLAB ADDED W/THE HEAVIEST BEAM

DESIGN LOAD/LIFT POINT

= 33.8 × 1.155 = 39.0 K

FROM ATTACHED PCI LITERATURE & ALLOWING FOR $f'_{ci} = 7500$ PSI

USE (4) 1/2"φ x 2'-0" HOT ROLL STRUCT. LIFT LOOPS, MILD

EMBEDMENT ~~26"~~ 23 1/2" WITH 1'-0" HOOKS △

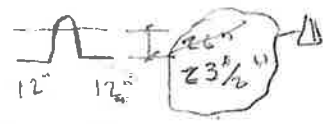

FROM ATTACHED PCI LITERATURE, TABLE 5.2.3

EMBEDMENT ≈ 26" + 12" = ~~38"~~ 36 1/2" △ > 39"

SWL (4:1 S.F.) = $\left(\frac{29+41}{2}\right)\sqrt{\frac{7500}{3000}}$ = 55.3 K > 39.0 K, O.K., BY INTERPOLATION BETWEEN VERTICAL & 45° PULL

(NOTE: IT IS REASONABLE TO INCREASE CAPACITY OF LIFT LOOP BY SQUARE ROOT RATIO OF THE CONCRETE STRENGTHS.)

STATE OF VERMONT ERNEST J. BROD No. 3014 PROFESSIONAL ENGINEER

TOPS

ALSO CHECK USING PCI FIGURE 6.15.7A, CASE 3 ATTACHED

$$\phi P_c = \phi\, 2.67 \sqrt{f'_c}\,(x_1)(y_1 + 2l_c)$$

$f'_c = 10000$ PSI

$f'_{ci} = 7500$ PSI

$$\phi P_c = 0.85 \times 2.67 \sqrt{7500}\left(\frac{13.75 + 15}{2}\right)\left(0 + 2 \times \cancel{26}\ 23\tfrac{1}{12}\right)$$

$$= 146917 \text{ LB} = \cancel{146.9^k}\ 132.8^k \quad @ \text{ STRIPPING}$$

FOR S.F. = 4:1 SWL = $\cancel{146.9}\ 132.8 / 4 + \cancel{36.7}\ 33.2^k \approx 39.0^k$ ~ OK

@ STRIPPING

LWIN ACCEPT S.F. = $\frac{4 \times \cancel{36.7}\ 33.2}{39} = \cancel{3.76}\ 3.41$

ALSO FOR S.F. = 4: SWL = $\cancel{36.7}\ 33.2 \times \sqrt{\frac{10000}{7500}} = \cancel{42.4}\ 38.4^k$

@ ERECTION.

$> 36.7^k$, OK.

CASTLETON BRIDGE
JPC # 23456-015

LOCATE C.G. OF BRIDGE 2SD BEAM(W/ CURBS

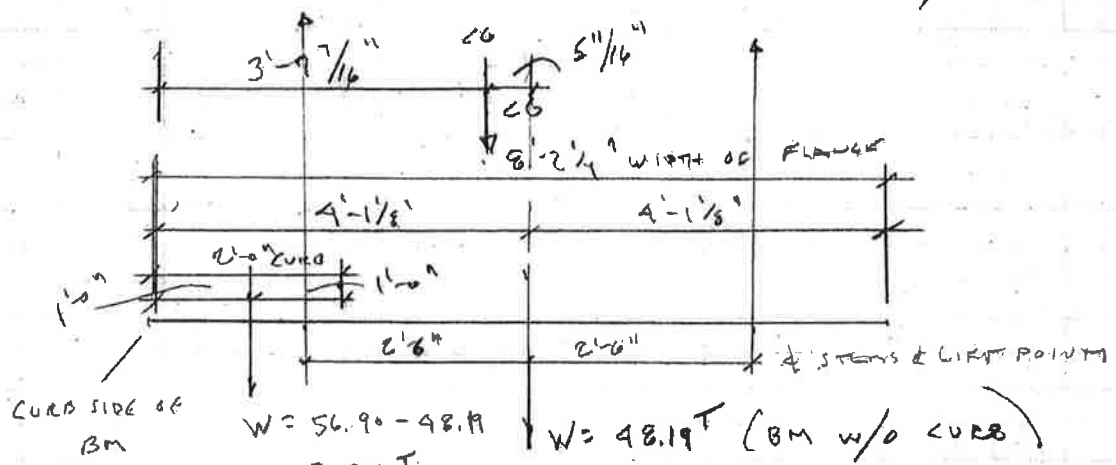

W = 56.90 − 48.19
= 8.71T
(CURB)

W = 48.19T (BM w/o CURB)

FROM BEAM SHOP DWGS

$$\bar{X}_{\text{FROM LEFT}} = \frac{48.19 \times 4.09 + 8.71 \times 1.6}{48.19 + 8.71} = 3.62'$$

OR 3'-7 7/16" FROM LEFT SIDE OR

5"/16" FROM ℄ BEAM

WING WALLS $f'_c = 5000$ psi $f'_{cc} = 3500$ psi

WT OF HEAVIEST WING WALL (WW 3) = 13.95^T

$f'_c = 5000$ psi $f'_{cc} = 3500$ psi THICKNESS = 18"

STRIPPING - PANEL IN FLAT

USE (4) LIFTERS IN FACE OF PANEL LOCATED SYMMETRICALLY ABOUT C.G. OF PANEL APPROX @ 1/5 POINTS E.W.

TENSION, LOAD/LIFT POINT = $\frac{13.95 \times 2}{4}$ = 6.98^k

FROM ATTACHED PRODUCT LITERATURE, SHT 28

USE 4^{T}x7½" S.L. SWL(4:1 S.F.) = 8000LB > 6.98^k, OK

ERECTION - ROLL PANEL ABOUT BOTTOM EDGE USING (2) LIFTERS @ T/EDGE OF PANEL

FIRST MAKE APPROXIMATE CHECK FOR CRACKING OF PANEL DURING PANEL ROTATION; USE TALLEST WING WALL (WW 2 @ 12'-0" HEIGHT, MAX)

w = 225 PLF; PANEL IS 18" THICK

$M = wl^2/8 = 1.3 \times 225 \times 12.0^2/8 = 526.5$ LB-FT/FT; 1.3 IS ROTATION FACTOR

$S = bh^2/6 = 12 \times 18^2/6 = 648$ IN^3/FT

$f = 526.5 \times 12/648 = 9.8$ psi << $5\sqrt{3500} = 296$ psi, OK,

PANEL CAN BE ROLLED UP W/O CRACKING

SHEAR LOAD, V: EXTERIOR INSERT

$$= \frac{13.95 \times 2}{2 \times 2} = 6.98^{k}$$

FROM ATTACHED PRODUCT LITERATURE, SHT 30

USE 8" x 13 3/8" S.L., SWL (4:1 S.F.) = 6.7^k

IN 9" THICK PANEL & f'_c = 4500 PSI, ~~#1~~

INSPECTION FOR 1.8" THICK PANEL & f'_c = ~~8500~~ PSI

SWL (4:1 S.F.) > 6.98^k APPLIED SHEAR LOAD, O.K.

USE #5 TIGHT TO LIFTER ON TOP

PANEL 1.1 HANGING FROM (2) INSERTS AT TOP EDGE

TENSION LOAD, $T = \frac{13.95 \times 2}{2} = 13.95^k$

FROM ATTACHMENT PRODUCT LITERATURE, SHEET 28

USE $.8^T \times 13^3/_4{}^n$ S.L., MECH S.W.L (4:1, S.F) IN TENSION

IS 16^k, OK.

EVALUATE TENSILE STRENGTH IN CONCRETE, USING REF FIG. 16.15.1A, CASE 3 ATTACHMENT, LIFTING AND LIKE STUDS

$$\phi P_c = 0.85 \times 3.67 \sqrt{5000}\,(18)\left(.8 + 2 \times 13^3/_4\right)/1000$$

$$= 77.3^k$$

FOR S.F = 4:1 SWL = $77.3/4 = 19.3^k > 13.95^k$, OK

(BUT NOT GREATER THAN 16.0^k)

△1

CASTLETON BRIDGE
JPC # 23456-015

LIFTING LOOP/LIFT INSERT DESIGN CALCULATIONS

(WORK W/ CARRARA SHOP DWNGS. & PREVIOUS DESIGN CALCULATIONS DATED 2-13-15)

△1 THESE CALCULATIONS REVISE THE LIFT LOOPS FOR THE ABUTMENTS ONLY. THE STRAND LIFTERS IN THE CHEEK WALL WILL BE REPLACED W/ (2) 20T S.L. ANCHORS WITH (9) 1/2" ϕ STRANDS LOOPED AROUND THE SHOE OF EACH LIFTER FOR ADDITIONAL ANCHORAGE. THE (5) 0.600" ϕ STRAND LIFT LOOP AT THE OTHER END OF THE ABUTMENT WILL BE REPLACED W/ TWO (3) 0.600" ϕ STRAND LIFT LOOPS. THE LOCATION OF THE LIFT LOOPS/LIFT INSERTS IS APPROX UNCHANGED RELATIVE TO THE C.G. OF THE ABUTMENT & ∴ THE LOADS AT THE LIFT LOOPS/LIFT INSERTS FROM THE PREVIOUS CALCULATIONS MAY BE USED. CALCULATIONS ARE DONE FOR "CT-AB4", THE HEAVIEST ABUTMENT, BUT ARE APPLICABLE FOR ALL THE ABUTMENTS, UNO. SEE SKETCH.

TOPS

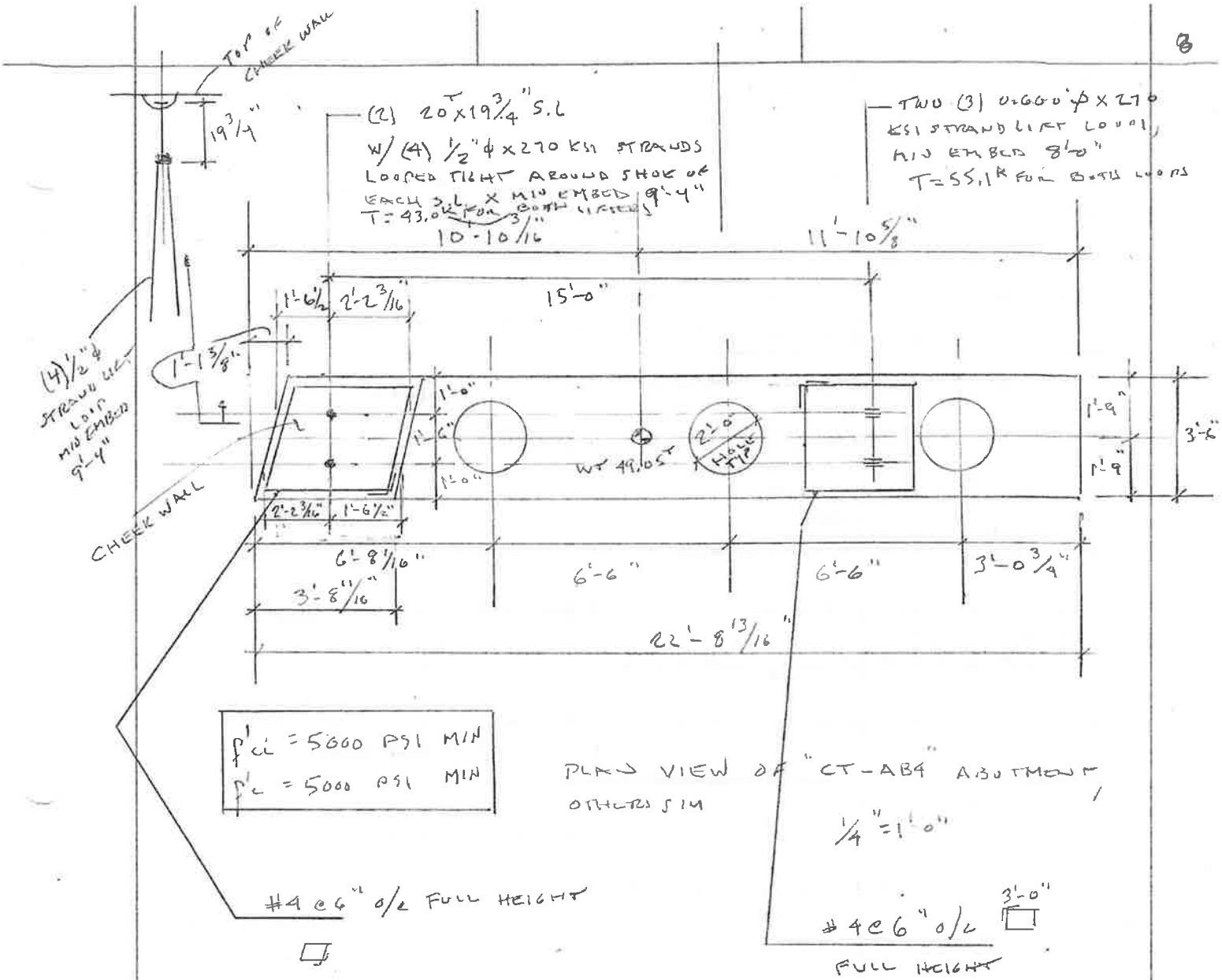

NOTES:

1. TOP OF STRAND LIFT LOOPS & INSERTS TO BE SUCH THAT A LEVEL PICK CAN BE MADE.

2. ADD TIES AS SHOWN.

TOPS

LIFTERS @ CHECK WALL

DESIGN TENSION LOAD = 43.0^k, FROM PREVIOUS CALCS.

USE (2) 20"x19 3/4" S.L SWL(4:1 S.F.) = 2x40^k = 80^k > 43.0^k, O.K.

SEE ATTACHED PRODUCT LITERATURE.

BECAUSE OF EDGE DISTANCE LIMITATIONS

CHECK USING PCI FIG 6.15.7A, CASE 3, ATTACHED

$$\phi P_{ci} = \frac{0.85 \times 2.67 \sqrt{5000}\,(42)(2 \times 14.75)}{1000} = 266^k$$

FOR S.F. = 4:1

$$SWL = 266/4 = 66^k > 43^k, \text{ O.K.}$$

USE (4) 1/2" ϕ STRANDS LOOPED AROUND EACH OF THE TWO INSERTS, MIN EMBED 9'-4"

FROM PCI TABLE 5.2.3, ATTACHED

SWL (4:1 S.F.) = 2x41 = 82^k > 43^k, O.K.

(EDGE DISTANCE CONSIDERATIONS O.K. BY PREVIOUS CHECK ABOVE)

LIFTERS @ OPPOSITE END

DESIGN TENSION LOAD = 55.1^k, FROM PREVIOUS CALCS.

USE (2) SETS OF (3) 0.600" ϕ x270 KSI

LIFT LOOPS, MIN EMBED 8'-0"

FROM PCI TABLE 5.2.3 ATTACHED

SWL (4:1 S.F.) = 2x41 = 82^k > 55.1^k, O.K.

CHECK USING PCI FIG 6.15.7A, CASE 6 ATTACHMENT

$$\phi P_r = 0.85 \times 2.67 \sqrt{3000}\,(42)(54)/1000 = 364^k$$

FOR S.F. 4:1

$$SWL = 364/4 = 91^k > 55.1^k, \text{ OK}$$

ALSO CHECK USING INDUSTRY PRACTICE OF NOMINALLY RATING (4:1 S.F.) EACH LOOP @ 10^k

$$SWL = 6 \times 10^k = 60^k > 55.1^k, \text{ OK}$$

TOPS

ABUTMENTS $f'_c = 5000$ PSI. $f'_c = 5000$ PSI REVISED FROM $f'_c = 3500$ PSI

CT-AB 4 IS HEAVIEST ABUTMENT = 49.05 T, OTHERS SIM.

SEE SHTS 8.B.9. FOR ABUTMENT WEIGHTS & C.G.'S &

TENSION LOADS ON LIFT LOOPS

NOTE: PAGE 11-14 ABUTMENT DESIGN CALCULATIONS ARE INCLUDED AS A REFERENCE FOR THOSE DESIGN CALCULATIONS PRESENTED ON PAGES 7-10. PLEASE REFERENCE NOTE ON PAGE 7.

TOPS

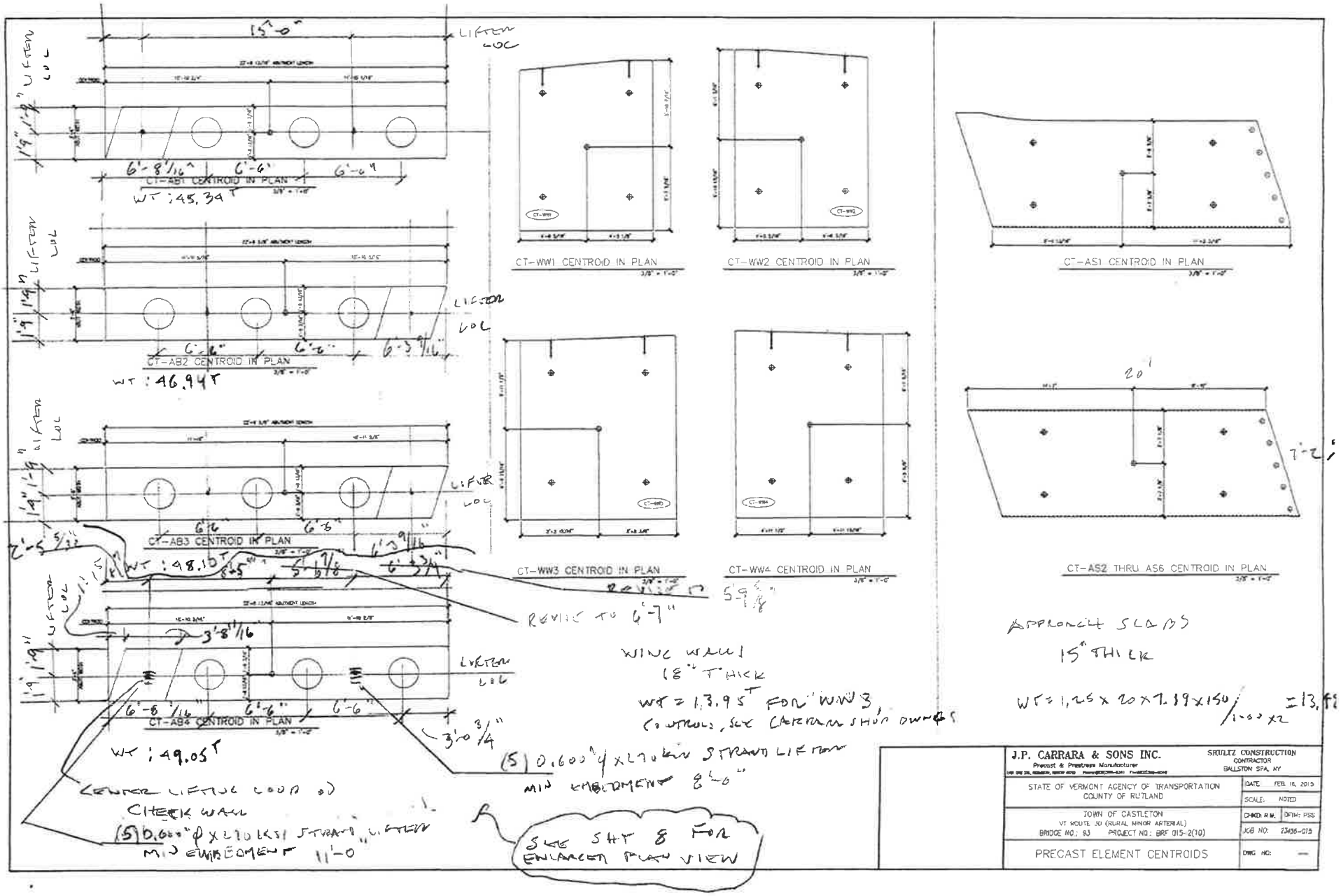
CT-AB1 CENTROID IN PLAN
WT : 45.39 T
CT-AB2 CENTROID IN PLAN
WT : 46.94 T
CT-AB3 CENTROID IN PLAN
WT : 48.10 T
CT-AB4 CENTROID IN PLAN
WT : 49.05 T
LIFTER LOC
CT-WW1 CENTROID IN PLAN
CT-WW2 CENTROID IN PLAN
CT-WW3 CENTROID IN PLAN
CT-WW4 CENTROID IN PLAN
CT-AS1 CENTROID IN PLAN
CT-AS2 THRU AS6 CENTROID IN PLAN
REVISE TO 6'-7"
WING WALL
18" THICK
WT = 13.95 T FOR WW3
(5) 0.600" φ X 270 KSI STRAND LIFTER
MIN EMBEDMENT 8'-0"
CENTER LIFTING LOOP ON
CHECK WALL
(5) 0.600" φ X 270 KSI STRAND LIFTER
MIN EMBEDMENT 11'-0"
SEE SHT 8 FOR
ENLARGED PLAN VIEW
APPROACH SLABS
15" THICK
J.P. CARRARA & SONS INC.
Precast & Prestress Manufacturer
SHULTZ CONSTRUCTION
CONTRACTOR
BALLSTON SPA, NY
STATE OF VERMONT AGENCY OF TRANSPORTATION
COUNTY OF RUTLAND
DATE: FEB. 16, 2015
SCALE: NOTED
TOWN OF CASTLETON
VT ROUTE 30 (RURAL MINOR ARTERIAL)
BRIDGE NO.: 93 PROJECT NO.: BRF 015-2(10)
CHKD: R.W.
DFTM: PSS
JOB NO: 23436-015
PRECAST ELEMENT CENTROIDS
DWG NO: —

12

CT - AB4

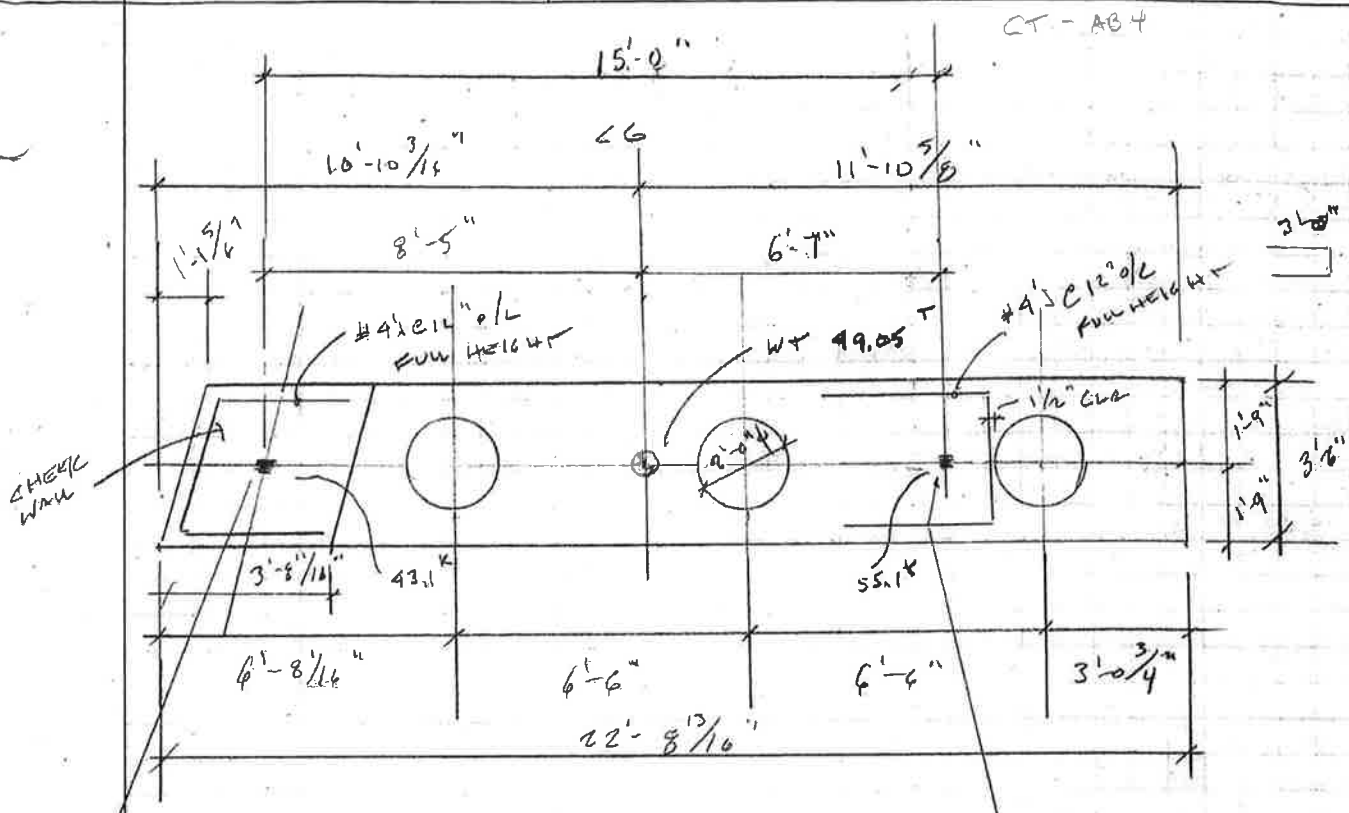

(5) 0.600" ϕ x 270 ksi
STRAND LIFT LOOP
MIN EMBEDMENT 11'-0", CENTER ON CHECK WALL E.W

(5) 0.600" ϕ x 270 ksi
STRAND LIFT LOOP
MIN EMBEDMENT 8'-0"

CT - AB4 ABUTMENT PLAN VIEW SHOWN, OTHERS SIM.

STRAND LIFTER PLAN VIEW FOR CT-AB4

TENSION LOAD @ CHECK WALL LIFTER $= \frac{49.05 \times 6.58 \times 2}{15.0} = 43.0^{k}$

TENSION LOAD @ OTHER LIFTER $= 49.05 \times 2 - 43.0 = 55.1^{k}$

NOTE: 1.) TOP OF TWO LIFT LOOPS TO BE LEVEL.

2.) SPLAY BOTTOM OF LIFT LOOP STRANDS AS MUCH AS PRACTICAL TO ENGAGE AS MUCH CONCRETE AS POSSIBLE.

3.) ADD #4 HAIRPIN AS SHOWN

FROM ATTACHED PCI LITERATURE TABLE 5.2.3.

(5) 0.600" ϕ X 270 KSI STRAND, LIFT LOOP, MIN. EMBEDMENT 8'-0"

f'_c = 5000 PSI, REVISED FROM 3500 PSI

SWL(4:1 S.F.) = 91 X 1.1 = 45.1^K < 55.1^K, SOMEWHAT LOW;

BUT CONCRETE STRENGTH AT STRIPPING IS 5000 PSI

REVISED SWL(4:1 S.F.) = $45.1\sqrt{\frac{5000}{3500}}$ = 58.2^K > 55.1^K, OK

NOTE: IT IS REASONABLE TO INCREASE CAPACITY BY SQUARE ROOT RATIO OF CONCRETE STRENGTHS

ALSO CHECK USING PCI FIG 6.15.7A, CASE 6 ATTACHED

$\phi P_1 = 0.85 \times 2.67 \sqrt{5000}(42)(54)/1000 = 364^K$

FOR S.F. = 4:1

SWL = 364/4 = 91^K > 55.1^K, OK

ALSO CHECK USING INDUSTRY PRACTICE OF NOMINAL RATING (4:1 S.F.)

0.600" ϕ STRAND LIFT LOOP @ 12^K EACH ∴ USE (5) 0.600" ϕ X 270 KSI STRAND LIFT LOOPS.

5 X 12 = 60^K > 55.1^K, OK

P-52 Swift Lift® Anchor Tensile and Shear Capacity

When anchors are used in the face of thin concrete elements

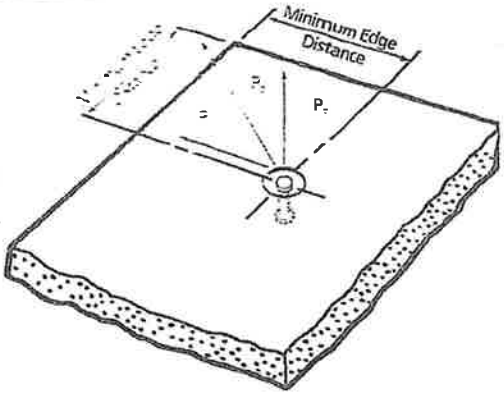

The following table lists the P-52 Swift Lift Anchors that are currently manufactured. Other sizes and lengths are available on special order. However, the sizes and lengths of anchors shown will handle the majority of flat precast concrete elements.

When the P-52 Swift Lift Anchor is properly embedded in normal weight concrete, the tabulated working loads are applicable for any direction of load. This applies even if the direction of load is parallel to the axis of the anchor, perpendicular to it or at any other angle.

Minimum distance between anchors is twice the minimum edge distance.

It is critical to remember that in order to obtain the safe working loads listed in the table below, the normal weight concrete must have obtained the minimum concrete strength shown, prior to initial load application.

Swift Lift Anchor Ton x Length	Safe Working Load	Minimum Concrete Strength	Minimum Edge Distance
1 ton x 2-5/8"	1,700 lbs.	3,500 psi	8"
1 ton x 3-3/8"	2,000 lbs.	2,200 psi	10"
1 ton x 4-3/8"	2,000 lbs.	1,600 psi	10"
1 ton x 8"	2,000 lbs.	1,600 psi	10"
1 ton x 9-1/2"	2,000 lbs.	1,600 psi	10"
2 ton x 2-3/4"	2,100 lbs.	3,500 psi	8"
2 ton x 3-3/8"	2,900 lbs.	3,500 psi	10"
2 ton x 5-1/2"	4,000 lbs.	1,600 psi	13"
2 ton x 6"	4,000 lbs.	1,600 psi	13"
2 ton x 6-3/4"	4,000 lbs.	1,600 psi	13"
2 ton x 11"	4,000 lbs.	1,600 psi	14"
4 ton x 3-3/4"	4,000 lbs.	3,500 psi	12"
4 ton x 4-1/4"	4,900 lbs.	3,500 psi	13"
4 ton x 4-3/4"	5,800 lbs.	3,500 psi	14"
4 ton x 5-1/2"	7,400 lbs.	3,500 psi	17"
4 ton x 5-3/4"	7,900 lbs.	3,500 psi	17"
4 ton x 7-1/8"	8,000 lbs.	1,800 psi	20"
4 ton x 9-1/2"	8,000 lbs.	1,600 psi	17"
4 ton x 14"	8,000 lbs.	1,600 psi	18"
4 ton x 19"	8,000 lbs.	1,600 psi	20"
8 ton x 4-3/4"	6,400 lbs.	3,500 psi	16"
8 ton x 6-3/4"	11,200 lbs.	3,500 psi	21"
8 ton x 10"	16,000 lbs.	3,500 psi	19"
8 ton x 13-3/8"	16,000 lbs.	1,600 psi	23"
8 ton x 26-3/4"	16,000 lbs.	1,600 psi	27"
20 ton x 10"	25,000 lbs.	3,500 psi	24"
20 ton x 19-3/4"	40,000 lbs.	3,500 psi	31"

THESE ARE GOVERNED BY SHEAR, FOR TENSILE LOAD USE 45° SHEAR CONE I.E. EDGE DISTANCE IS ½ LENGTH OF INSERT.

7" FOR TENSILE LOAD

Safe Working Loads provide a factor of safety of approximately 4 to1 in normal weight concrete. Safe Working Load is based on anchor setback from face of concrete "X" dimension, as shown on page 26.

P-59 Swift Lift® Shear Bar
P-59 Swift Lift® Smooth Wire Shear Bar

Dayton Superior Swift Lift Shear Bars (P-59) are utilized wh edge lifting precast elements. The shear bar is secured tightly the recess plug and at the time of lift helps to transfer the sh load deeper into the concrete. The P-59 Smooth Wire Shear B is designed to snap into the built-in clips on the P-54 recess plug. The standard shear bar is fabricated from rebar and mu be securely wired tightly to the Swift Lift recess plugs.

P-59 Swift Lift Shear Bar
1-Ton and 8-Ton

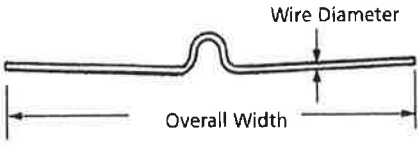

P-59 Swift Lift Smooth Wire Shear Bar
2-Ton and 4-Ton

To Order:
Specify: (1) quantity, (2) name, (3) system size.

Example:
200, P-59 Swift Lift Shear Bars, 4-Ton.

Anchor Safe Working Load (tons)	Shear Bar Type	Overall Width	Minimum Anchor Length	Wall Thickness	Minimum Corner Distance	Safe Working Load
1	Rebar	19"	4-3/4"	5"	15"	1,750 lbs.
1	Rebar	19"	4-3/4"	5-1/2"	16"	2,000 lbs.
1	Rebar	19"	4-3/4"	6"	17"	2,000 lbs.
2	Wire	24"	6-3/4"	5"	15"	1,750 lbs.
2	Wire	24"	6-3/4"	5-1/2"	16"	2,200 lbs.
2	Wire	24"	6-3/4"	6"	17"	2,600 lbs.
2	Wire	24"	6-3/4"	7"	19"	2,700 lbs.
2	Wire	24"	6-3/4"	8"	21"	2,800 lbs.
4	Wire	30"	9-1/2"	5-1/2"	16"	2,100 lbs.
4	Wire	30"	9-1/2"	6"	17"	2,200 lbs.
4	Wire	30"	9-1/2"	7"	19"	2,600 lbs.
4	Wire	30"	9-1/2"	8"	21"	2,800 lbs.
8	Rebar	34"	13-3/8"	8"	19"	5,600 lbs.
8	Rebar	34"	13-3/8"	9"	21"	6,700 lbs.

Safe Working Load provides a factor of safety of approximately 4 to 1 in 4,500 psi normal weight concrete.

17.

Figure 6.15.7A (continued) Design tensile strength for $h \geq h_{min}$, ϕP_{c1}—Case 3

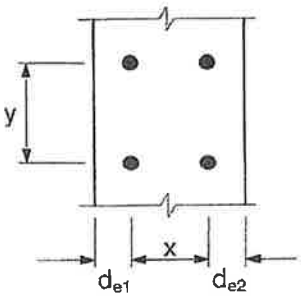

x and y are the overall dimensions (width and length) of the stud group.

Case 3: Free edges on two opposite sides

$$\phi P_{c1} = \phi 2.67 \lambda \sqrt{f'_c}\,(x_1)(y_1 + 2\ell_e)$$

$$\phi = 0.85$$

where: x_1 and y_1 are the dimensions of the flat bottom of the part of the truncated pyramid.

For Case 3: $x_1 = x + d_{e1} + d_{e2}$ $\quad y_1 = y$

Note: Table values are based on $\lambda = 1.0$ and $f'_c = 5000$ psi; for different material properties, multiply table values by $\lambda\sqrt{f'_c/5000}$

h, in.	y_1, in. \ x_1, in.	Design tensile strength, ϕP_{c1} (kips)														
		2	4	6	8	10	12	14	16	18	20	22	24	26	28	30
3	0	2	4	6	8	9	11	13	15	17	19	21	23	25	27	29
	2	3	5	8	10	13	15	18	21	23	25	28	31	33	36	39
	4	3	7	9	13	16	19	23	25	29	32	35	39	42	45	48
	6	4	8	11	15	19	23	27	31	35	39	42	46	50	54	58
	8	5	9	13	18	23	27	31	36	41	45	49	54	59	63	67
	10	5	10	15	21	25	31	36	41	46	51	57	61	67	72	77
	12	6	11	17	23	29	35	41	46	52	58	63	69	75	81	87
	14	7	13	19	25	32	39	45	51	58	64	71	77	83	90	96
	16	7	14	21	28	35	42	49	57	63	71	77	85	92	99	106
4	0	3	5	8	10	13	15	18	21	23	25	28	31	33	36	39
	2	3	7	9	13	16	19	23	25	29	32	35	39	42	45	48
	4	4	8	11	15	19	23	27	31	35	39	42	46	50	54	58
	6	5	9	13	18	23	27	31	36	41	45	49	54	59	63	67
	8	5	10	15	21	25	31	36	41	46	51	57	61	67	72	77
	10	6	11	17	23	29	35	41	46	52	58	63	69	75	81	87
	12	7	13	19	25	32	39	45	51	58	64	71	77	83	90	96
	14	7	14	21	28	35	42	49	57	63	71	77	85	92	99	106
	16	8	15	23	31	39	46	54	61	69	77	85	92	100	108	115
6	0	4	8	11	15	19	23	27	31	35	39	42	46	50	54	58
	2	5	9	13	18	23	27	31	36	41	45	49	54	59	63	67
	4	5	10	15	21	25	31	36	41	46	51	57	61	67	72	77
	6	6	11	17	23	29	35	41	46	52	58	63	69	75	81	87
	8	7	13	19	25	32	39	45	51	58	64	71	77	83	90	96
	10	7	14	21	28	35	42	49	57	63	71	77	85	92	99	106
	12	8	15	23	31	39	46	54	61	69	77	85	92	100	108	115
	14	9	17	25	33	42	50	59	67	75	83	92	100	109	117	125
	16	9	18	27	36	45	54	63	72	81	90	99	108	117	125	135
8	0	5	10	15	21	25	31	36	41	46	51	57	61	67	72	77
	2	6	11	17	23	29	35	41	46	52	58	63	69	75	81	87
	4	7	13	19	25	32	39	45	51	58	64	71	77	83	90	96
	6	7	14	21	28	35	42	49	57	63	71	77	85	92	99	106
	8	8	15	23	31	39	46	54	61	69	77	85	92	100	108	115
	10	9	17	25	33	42	50	59	67	75	83	92	100	109	117	125
	12	9	18	27	36	45	54	63	72	81	90	99	108	117	125	135
	14	9	19	29	39	48	58	67	77	87	96	106	115	125	135	144
	16	10	21	31	41	51	61	72	82	92	103	113	123	133	143	154

Fig. 5.2.10 Arrangement for equalizing lifting loads

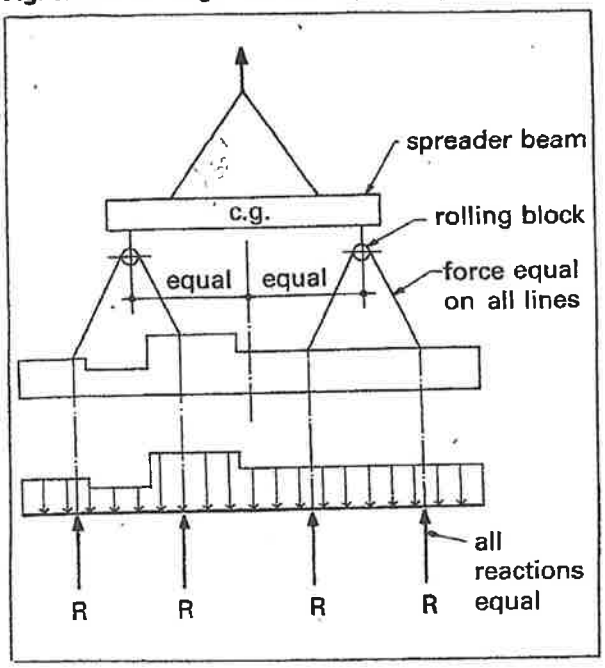

lines equal. The member can then be analyzed as a beam with varying load supported by equal reactions.

The force in inclined lift lines can be determined from Fig. 5.2.7.

5.2.8 Handling devices

The most common lifting devices are prestressing strand or cable loops projecting from the concrete, threaded inserts, or special proprietary devices.

Since lifting devices are subject to dynamic loads, ductility of the material is part of the design requirement. Deformed reinforcing bars should not be used since the deformations result in stress concentrations from the shackle pin. Also, reinforcing bars are often hard-grade or re-rolled rail steel with little ductility and low impact strength at cold temperatures. Smooth bars of a known steel grade may be used if adequate embedment or mechanical anchorage is provided. The diameter must be such that localized failure will not occur by bearing on the shackle pin.

Prestressing strand is often used for lifting loops. The variables involved make it almost impossible to calculate a capacity which can be used for all situations. Generally, producers will establish standard criteria for use in handling the standard products manufactured by that plant. Table 5.2.3 is an example which has been used successfully.

Reduced capacities for shorter embedment lengths may be suitable. In shallow products, providing a 90° bend can reduce the required embedment length significantly. Lightly rusted strand has better bond than bright strand.

The diameter of the bend of the loop should be at least 4 in. For smaller diameters, the loop capacities in Table 5.2.3 should be reduced to:

1 in. dia. — 70 %
2 in. dia. — 85 %
3 in. dia. — 90 %

The angle of incline of lifting has little effect on the strand lifting loop capacity if the angle from the horizontal is more than about 20°. Typical handling methods are usually such that this angle is no less than 60°.

Table 5.2.3 Capacity of ½ in. diameter, 270 ksi strands used as lifting loops

Lifting angle	Embedment length (in.)	Single loop (kips)	Double loop (kips)	Triple loop (kips)
45 degrees 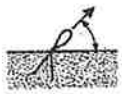	16	5	8.5	11.5
	22	8	13	17.5
	28	10	18	23
	34	11	23	29
Vertical 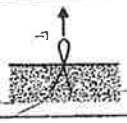	16	7.5	12.5	16.5
	22	11.5	19	24.5
	28	15.5	25.5	33
	34	16	32.5	41

1. These values are limited by slippage rather than strand strength, with a factor of safety of 4. For other strand diameters, multiply table values by 0.75 for ⅜ in. diameter, 0.85 for 7/16 in. diameter, and 1.1 for 0.6 in.diameter.
2. Minimum f'_c = 3000 psi.
3. Multiple strand loops must be fabricated to ensure equal force on each strand.

Figure 6.15.7A (continued) Design tensile strength for $h \geq h_{min}$, ϕP_{c1}—Case 6

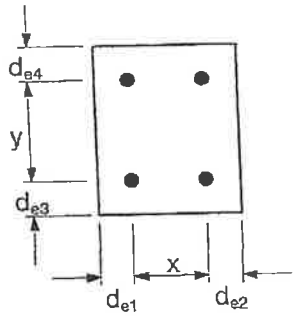

x and y are the overall dimensions (width and length) of the stud group.

Case 6: Free edges on four adjacent sides

$\phi P_{c1} = \phi 2.67 \lambda \sqrt{f'_c}\,(x_1)(y_1)$

$\phi = 0.85$

where: x_1 and y_1 are the dimensions of the [illegible] of the part of the truncated pyramid.

For Case 6: $x_1 = x + d_{e1} + d_{e2}$ $\quad y_1 = y - [illegible]$

Note: Table values are based on $\lambda = 1.0$ and $f'_c = 5000$ psi;

for different material properties, multiply [illegible] values by $\lambda\sqrt{f'_c/5000}$

ℓ_e in.	y_1, in. \ x_1, in.	Design tensile strength, ϕP_{c1} (kips)												
		2	4	6	8	10	12	14	16	18	20	22	24	26 [illegible]
3	0	0	0	0	0	0	0	0	0	0	0	0	0	[illegible]
	2	1	1	2	3	3	4	5	5	6	7	7	8	[illegible]
	4	1	3	4	5	7	8	9	10	11	13	14	15	[illegible]
	6	2	4	6	8	9	11	13	15	17	19	21	23	[illegible]
	8	3	5	8	10	13	15	18	21	23	25	29	31	[illegible]
	10	3	7	9	13	16	19	23	25	29	32	35	39	[illegible]
	12	4	8	11	15	19	23	27	31	35	39	42	46	[illegible]
	14	5	9	13	18	23	27	31	36	41	45	49	54	[illegible]
	16	5	10	15	21	25	31	36	41	46	51	35	61	[illegible]
4	0	0	0	0	0	0	0	0	0	0	0	0	0	[illegible]
	2	1	1	2	3	3	4	5	5	6	7	7	8	[illegible]
	4	1	3	4	5	7	8	9	10	11	13	14	15	[illegible]
	6	2	4	6	8	9	11	13	15	17	19	21	23	[illegible]
	8	3	5	8	10	13	15	18	21	23	25	28	31	[illegible]
	10	3	7	9	13	16	19	23	25	29	32	35	39	[illegible]
	12	4	8	11	15	19	23	27	31	35	39	42	46	[illegible]
	14	5	9	13	18	23	27	31	36	41	45	49	54	[illegible]
	16	5	10	15	21	25	31	36	41	46	51	57	61	[illegible]
6	0	0	0	0	0	0	0	0	0	0	0	0	0	[illegible]
	2	1	1	2	3	3	4	5	5	6	7	7	8	[illegible]
	4	1	3	4	5	7	8	9	10	11	13	14	15	[illegible]
	6	2	4	6	8	9	11	13	15	17	19	21	23	[illegible]
	8	3	5	8	10	13	15	18	21	23	25	28	31	[illegible]
	10	3	7	9	13	16	19	23	25	29	32	35	39	[illegible]
	12	4	8	11	15	19	23	27	31	35	39	42	46	[illegible]
	14	5	9	13	18	23	27	31	36	41	45	49	54	[illegible]
	16	5	10	15	21	25	31	36	41	46	51	57	61	[illegible]
8	0	0	0	0	0	0	0	0	0	0	0	0	0	[illegible]
	2	1	1	2	3	3	4	5	5	6	7	7	8	[illegible]
	4	1	3	4	5	7	8	9	10	11	13	14	15	[illegible]
	6	2	4	6	8	9	11	13	15	17	19	21	23	[illegible]
	8	3	5	8	10	13	15	18	21	23	25	28	31	[illegible]
	10	3	7	9	13	16	19	23	25	29	32	35	39	[illegible]
	12	4	8	11	15	19	23	27	31	35	39	42	46	[illegible]
	14	5	9	13	18	23	27	31	36	41	45	49	54	[illegible]
	16	5	10	15	21	25	31	36	41	46	51	57	61	[illegible]

ABUTMENT, WING WALL & APPROACH SLABS GENERAL NOTES

1. MIN. CONCRETE STRENGTH AT 28 DAYS SHALL BE
   ABUTMENT & WING WALLS = 5,000 PSI.
   APPROACH SLABS = 4,000 PSI.
2. MIN. CONCRETE STRENGTH FOR HANDLING OF WING WALLS AND APPROACH SLABS SHALL BE 3,500 PSI (UNLESS NOTED OTHERWISE).
3. MIN. CONCRETE STRENGTH FOR HANDLING OF ABUTMENTS SHALL BE 5,000 PSI.
4. REINFORCING STEEL SHALL BE GR-60, ASTM A-615 (AASHTO M31) LEVEL II (DUAL COATED).
5. THE TOP OF ABUTMENTS SHALL RECEIVE A RAKE FINISH ROUGHENED TO 1/4" AMPLITUDE (UNLESS NOTED OTHERWISE).
6. THE TOP OF WING WALLS AND APPROACH SLABS SHALL RECEIVE A SMOOTH SCREED FINISH (UNLESS NOTED OTHERWISE).
7. SHEAR KEY SURFACES SHALL BE SAND BLASTED CLEAN.
8. PRECAST CONCRETE UNITS SHALL BE HANDLED AND ERECTED USING THE LIFTING INSERTS ONLY. THE MINIMUM SLING ANGLE FROM THE HORIZONTAL SHALL BE 60°. NON-PRESTRESSED UNITS SHALL BE STORED & TRANSPORTED WITH TIMBER SUPPORTS AT 5TH POINTS, UNLESS APPROVED BY J.P. CARRARA & SONS, INC.
9. MATERIAL SPECIFICATION AND MIX DESIGN SHALL CONFORM TO VERMONT SPEC. P510.02 AND P510.05 RESPECTIVELY.

   DESIGN MIX:

WING WALLS:	J.P.C. BRIDGE MIX #445MSCC
APPROACH SLABS:	J.P.C. BRIDGE MIX #445MSCC
ABUTMENTS:	J.P.C. BRIDGE MIX #445M-NO DCI

10. QUALITY CONTROL PROCEDURES ARE IN ACCORDANCE WITH PCI REQUIREMENTS. J.P. CARRARA & SONS, INC. IS A PCI CERTIFIED PLANT.
11. CURING METHOD: AS SOON AS THE TOP OF PRECAST CONCRETE UNITS ARE FINISHED, A COVER OF RIGID INSULATION AND POLY WILL BE PLACED OVER THE UNIT. NATURAL CURE WITH NO EXTERNAL HEAT APPLIED.
12. ABUTMENT POST-TENSIONING SEQUENCE:
    A. ERECT PRECAST CONCRETE ABUTMENTS AND INSTALL TRANSVERSE STRANDS.
    B. APPLY EPOXY BONDING COMPOUND TO MATCH CAST FACES OF VERTICAL CONSTRUCTION JOINTS.
    C. TENSION STRANDS TO 3 KIPS.
    D. CHECK ALIGNMENT OF PILE CAP ELEMENTS.
    E. POST-TENSION STRANDS TO 32 KIPS.

NEXT BEAM GENERAL NOTES

1. MIN. CONCRETE STRENGTH AT 28 DAYS SHALL BE 10,000 PSI.
2. MIN. CONCRETE STRENGTH AT STRESS TRANSFER SHALL BE 7,500 PSI.
3. REINFORCING STEEL SHALL BE GR-60, ASTM A-615 (AASHTO M31) LEVEL II (DUAL COATED).
4. PRESTRESSING STRANDS SHALL CONFORM TO ASTM A-416 (AASHTO M203) AND SHALL CONSIST OF 0.60"ø x 270 KSI 7-WIRE LOW RELAXATION STRANDS.
5. PRESTRESSING STRANDS SHALL EACH BE PULLED TO HAVE A NET TENSION OF 44.0 K AFTER ACCOUNTING FOR CHUCK SLIPPAGE. TENSION SHALL BE VERIFIED BY MEASURING STRAND ELONGATION. (SEE EXAMPLE ELONGATION CALCULATION AND TENSIONING PROCEDURE, THIS SHEET.)
6. ENDS OF PRESTRESSING STRANDS SHALL BE CUT FLUSH WITH END OF NEXT BEAM STEMS (UNLESS NOTED OTHERWISE).
7. ALL EXPOSED CORNERS SHALL BE CHAMFERED 3/4".
8. THE TOP OF BEAMS SHALL RECEIVE A SMOOTH SCREED FINISH (UNLESS NOTED OTHERWISE).
9. SHEAR KEY SURFACES SHALL BE ROUGHENED TO 1/8" AMPLITUDE.
10. BEAMS SHALL BE HANDLED AND ERECTED USING THE LIFTING LOOPS ONLY. RIGGING SHALL BE CONFIGURED SUCH THAT EQUAL AND VERTICAL FORCES ARE APPLIED TO EACH OF THE TWO LIFTING LOOPS AT EACH END OF THE BEAM. THE PINS OF THE SHACKLES SHALL BE PLACED THROUGH THE LIFTING LOOPS. SEE DETAIL, THIS SHEET. BEAMS SHALL BE STORED AND TRANSPORTED WITH TIMBER SUPPORTS. TIMBER SUPPORTS SHALL BE PLACED WITHIN CLOSE PROXIMITY TO THE SHIPPING SLEEVE LOCATION AS SHOWN BELOW, UNLESS APPROVED BY J.P. CARRARA & SONS, INC.
11. MATERIAL SPECIFICATION AND MIX DESIGN SHALL CONFORM TO VERMONT SPEC. P510.02 AND P510.05 RESPECTIVELY.

    DESIGN MIX: J.P.C. BRIDGE MIX #430M W/5 GAL CORROSION INHIBITOR.
12. QUALITY CONTROL PROCEDURES ARE IN ACCORDANCE WITH PCI REQUIREMENTS. J.P. CARRARA & SONS, INC. IS A PCI CERTIFIED PLANT.
13. CURING METHOD: AS SOON AS THE TOP OF BEAM IS FINISHED, A COVER OF INSULATED POLY. THE DESIRED CURING TEMPERATURE RANGE SHALL NOT DROP BELOW 50°F. THE TEMPERATURE SHALL BE RECORDED BY AUTOMATIC SENSOR INSTRUMENTS ON GRAPH CHARTS, SPACED NOT MORE THAN 100' APART AND WILL CONTINUE UNTIL RELEASE STRENGTH IS ACHIEVED. EACH CHART SHALL BE MARKED WITH THE CASTING DATED AND LOCATION OF THE RECORDER. IF NECESSARY TO MAINTAIN CASTING BED TEMPERATURE PRIOR TO CONCRETE PLACEMENT OR TO ACCELERATE EARLY AGE STRENGTH GAIN, EXTERNAL RADIANT HEAT MAY BE EMPLOYED VIA HOT WATER DUCTS BENEATH AND WITHIN THE PERIPHERY OF THE CASTING BED. MAXIMUM CURING TEMPERATURE SHALL NOT EXCEED PCI SPECIFIED LIMITS.
14. OWNER SHALL PROVIDE APPROPRIATE WATERPROOFING TO GROUTED AND/OR EPOXIED SHEAR KEYS. J.P. CARRARA & SONS, INC. SHALL NOT BE HELD LIABLE FOR PROBLEMS ASSOCIATED WITH MOISTURE INFILTRATING GROUTED AND/OR EPOXIED SHEAR KEYS.

DRAWING INDEX

SHT. #	DRAWING TITLE	REV. #	REV. DATE
C1	COVER SHEET		
F1	PRECAST ABUTMENT LAYOUT		
F2	ABUTMENT #1 ELEVATIONS		
F3	ABUTMENT #2 ELEVATIONS		
F4	PRESTRESSED NEXT BEAM & APPROACH SLAB LAYOUT		
F5	TRANSVERSE SECTION & DETAILS		
NB1	PRESTRESSED NEXT BEAM DETAILS		
NB2	PRESTRESSED NEXT BEAM DETAILS "CT-NB1"		
NB2.1	PRESTRESSED NEXT BEAM DETAILS "CT-NB1"		
NB3	PRESTRESSED NEXT BEAM DETAILS "CT-NB2"		
NB3.1	PRESTRESSED NEXT BEAM DETAILS "CT-NB2"		
NB3.2	PRESTRESSED NEXT BEAM DETAILS "CT-NB2"		
NB4	PRESTRESSED NEXT BEAM DETAILS "CT-NB3"		
NB4.1	PRESTRESSED NEXT BEAM DETAILS "CT-NB3"		
NB4.2	PRESTRESSED NEXT BEAM DETAILS "CT-NB3"		
AS1	PRECAST APPROACH SLAB DETAILS "CT-AS1"		
AS2	PRECAST APPROACH SLAB DETAILS "CT-AS2"		
AS3	PRECAST APPROACH SLAB DETAILS "CT-AS3"		
AS4	PRECAST APPROACH SLAB DETAILS "CT-AS4"		
AS5	PRECAST APPROACH SLAB DETAILS "CT-AS5"		
AB1	PRECAST ABUTMENT PLAN, SECTION & DETAILS		
AB2	PRECAST ABUTMENT DETAILS "CT-AB2"		
AB3	PRECAST ABUTMENT DETAILS "CT-AB1"		
AB3.1	PRECAST ABUTMENT DETAILS "CT-AB1" & "CT-AB4"		
AB4	PRECAST ABUTMENT DETAILS "CT-AB3"		
AB5	PRECAST ABUTMENT DETAILS "CT-AB4"		
WW1	PRECAST WINGWALL DETAILS "CT-WW1"		
WW2	PRECAST WINGWALL DETAILS "CT-WW2"		
WW3	PRECAST WINGWALL DETAILS "CT-WW3"		
WW4	PRECAST WINGWALL DETAILS "CT-WW4"		
M1	MATERIALS LIST (NEXT BEAMS)		
M2	MATERIALS LIST (ABUTMENTS, WINGWALLS & APPROACH SLABS)		

DESIGN LIVE LOAD: HL-93

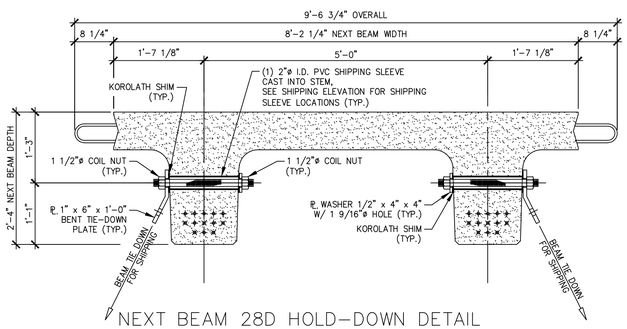

NEXT BEAM 28D HOLD-DOWN DETAIL FOR SHIPPING

3/4" = 1'-0"

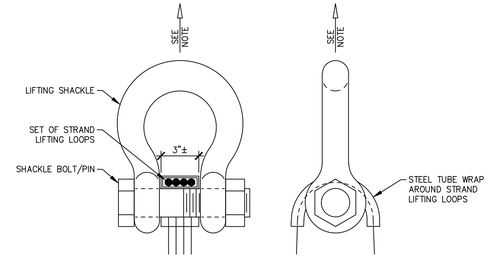

NOTE: BEAMS SHALL BE HANDLED AND ERECTED USING THE LIFTING LOOPS ONLY. RIGGING SHALL BE CONFIGURED SUCH THAT EQUAL AND VERTICAL FORCES ARE APPLIED TO EACH SET OF LIFTING LOOPS AT EACH END OF THE BEAM. SHACKLE BOLT/PIN SHALL BE PLACED UNDER LIFT LOOPS AS SHOWN. DESIGN AND CONFIGURATION OF RIGGING BY PURCHASER.

LIFTING SHACKLE DETAILS

N.T.S.

EXAMPLE PRESTRESSING STRAND ELONGATION CALC. AND TENSIONING

(NOT TO BE USED FOR CONSTRUCTION)

SIZE & GRADE: 0.60"ø x 270 KSI
AREA: 0.217 IN^2
TENSION: 44,000 LB. EACH STRAND
GRIP-TO-GRIP: 252'-0" = 252.00'
Es = 28,500,000 PSI (ASSUMED FOR THESE CALCULATIONS; VALUE TO BE OBTAINED FOR STRAND SPOOL ACTUALLY USED)

EXAMPLE:

$$\Delta = \frac{PL}{AE} = \frac{(44{,}000 - 3{,}000) \times 252.00 \times 12}{0.217 \times 28{,}500{,}000} = 20.047"$$

THEREFORE: (TOLERANCES ± 5%)
△ UPPER LIMIT = 1.05 x 20.047" = 21.05" = 21"
△ LOWER LIMIT = 0.95 x 20.047" = 19.04" = 19"

EXTRA FORCE REQUIRED TO COMPENSATE FOR 1/2" CHUCK SLIPPAGE:

$$\Delta P = \frac{0.5 \times 41{,}000}{20.047} = 1{,}023 \text{ LBS.}$$

TOTAL TENSIONING FORCE = 44,000 + 1,023 = 45,023 LBS.

ADDITIONALLY, INCREASED ELONGATION AND THE CORRESPONDING FORCE DUE TO FORM SHORTENING SHALL BE ACCOUNTED FOR IN THE CALCULATIONS USED FOR CONSTRUCTION PER PROVISION PCI MNL 116 5.3.11.3.

STRAND TENSIONING PROCEDURE:

1. PULL EACH STRAND INITIALLY TO 3,000* LBS. AND MARK STRAND.
2. THEN PULL EACH STRAND TO A TOTAL TENSION OF 45,023* LBS. AND MEASURE ELONGATION AFTER SEATING. IT MUST BE BETWEEN 19"* AND 21"*.

   * NOTE: FORCES READ ON STRESSING JACK GAUGES MUST BE MADE TO CORRESPOND TO ABOVE VALUES BASED ON CALIBRATION DATA FOR SPECIFIC JACK USED.
3. STRANDS IN BOTTOM TWO ROWS SHALL BE RE-PULLED TO VERIFY SHORTENING EFFECT OF SELF STRESSING BED. RE-PULL FORCE SHALL NOT INCLUDE OVER-PULL FOR SHORTENING.

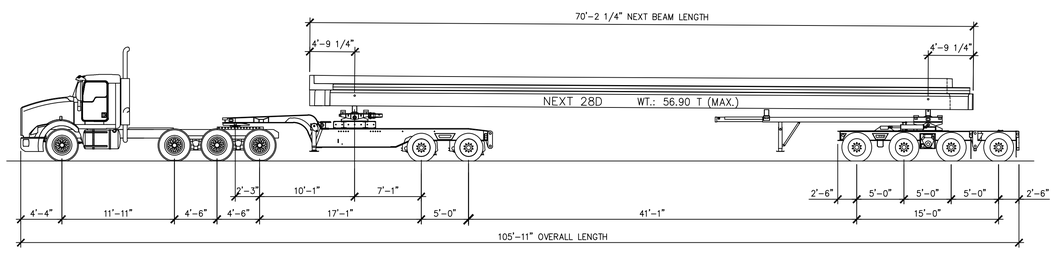

S H I P P I N G E L E V A T I O N

N.T.S.

SUBMITTED

April 17, 2015

J. P. CARRARA & SONS, INC.
MIDDLEBURY, VT 05753

APPROVAL STAMP:

J.P. CARRARA & SONS INC.
Precast & Prestress Manufacturer
2464 CASE STR., MIDDLEBURY, VERMONT 05753 Phone:(802)388-6361 Fax:(802)388-9010

SHULTZ CONSTRUCTION
CONTRACTOR
BALLSTON SPA, NY

STATE OF VERMONT AGENCY OF TRANSPORTATION
COUNTY OF RUTLAND

TOWN OF CASTLETON
VT ROUTE 30 (RURAL MINOR ARTERIAL)
BRIDGE NO.: 93 PROJECT NO.: BRF 015-2(10)

COVER SHEET

DATE:	APR. 16, 2015
SCALE:	NOTED
CHKD: R.M.	DFTM: PSS
JOB NO:	23456-015
DWG. NO:	C1

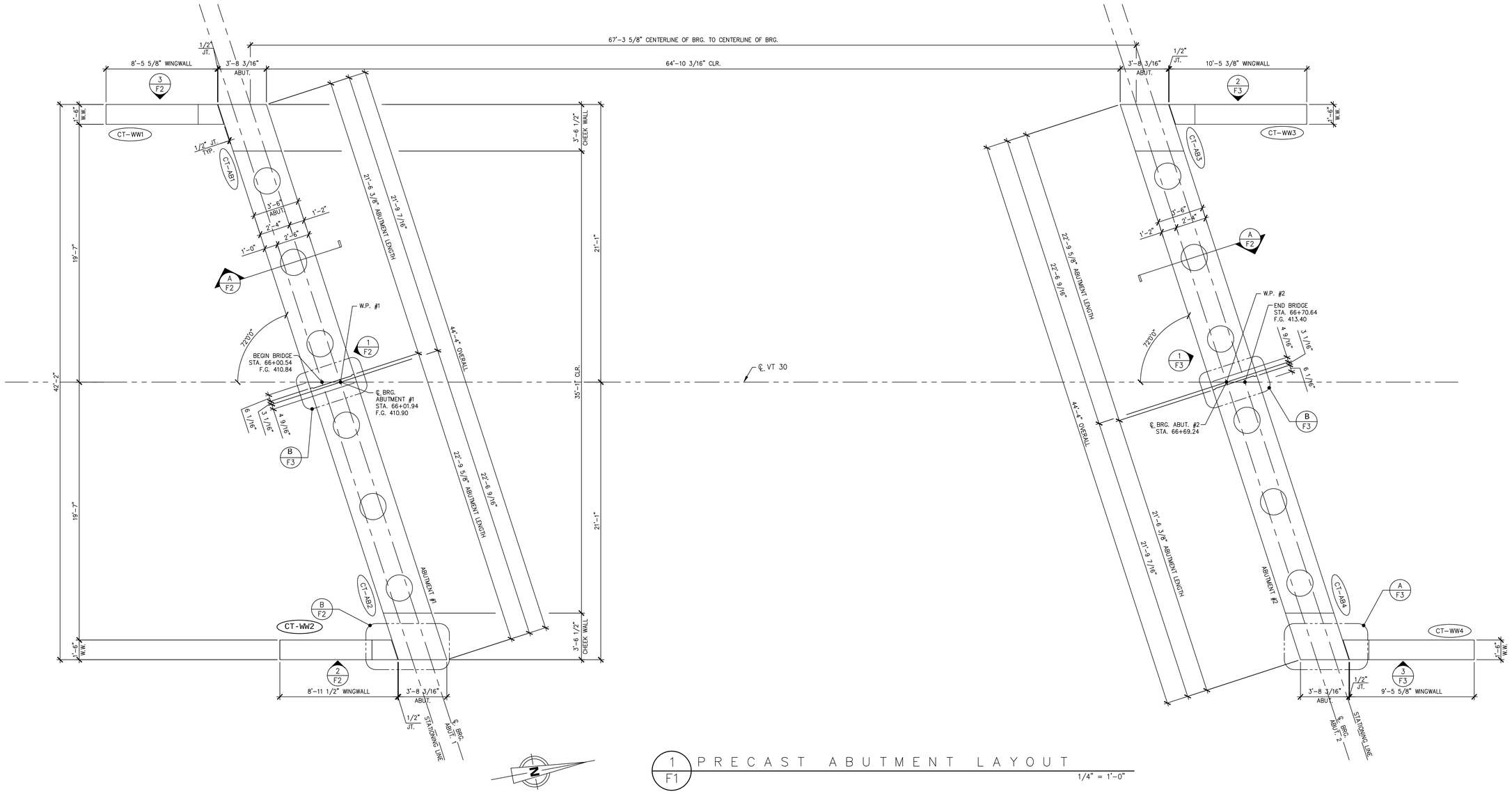

1/F1 PRECAST ABUTMENT LAYOUT

1/4" = 1'-0"

APPROVAL STAMP:

J.P. CARRARA & SONS INC.
Precast & Prestress Manufacturer
2464 CASE STR., MIDDLEBURY, VERMONT 05753 Phone:(802)388-6361 Fax:(802)388-9010

SHULTZ CONSTRUCTION
CONTRACTOR
BALLSTON SPA, NY

STATE OF VERMONT AGENCY OF TRANSPORTATION
COUNTY OF RUTLAND

DATE: APR. 16, 2015
SCALE: NOTED

TOWN OF CASTLETON
VT ROUTE 30 (RURAL MINOR ARTERIAL)
BRIDGE NO.: 93 PROJECT NO.: BRF 015-2(10)

CHKD: R.M. DFTM: PSS
JOB NO: 23456-015

PRECAST ABUTMENT LAYOUT

DWG. NO: F1

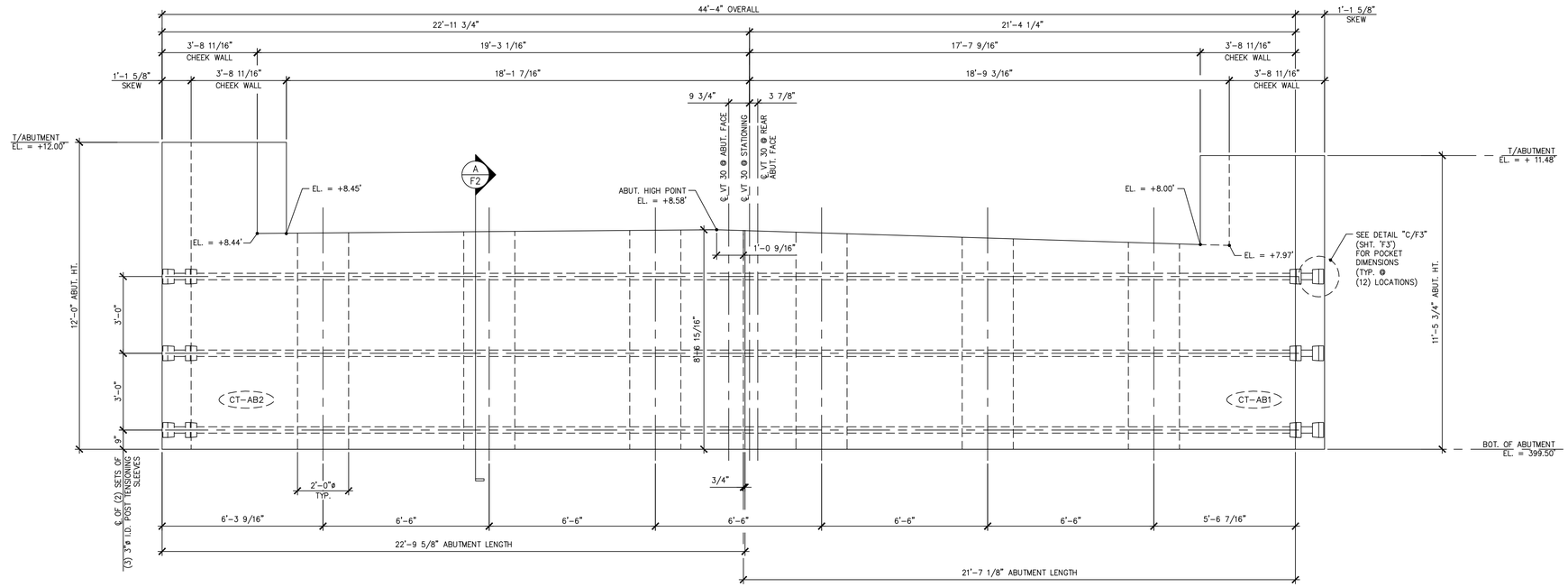

1 / F2 ABUTMENT #1 ELEVATION

3/8" = 1'-0"

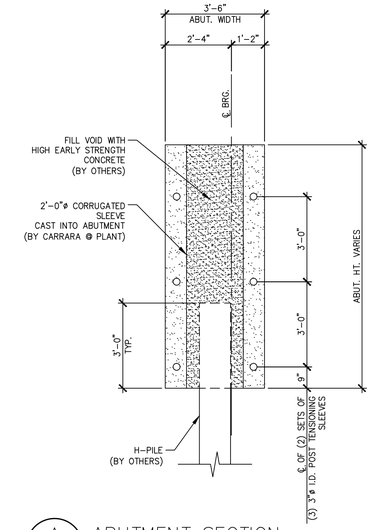

A / F2 ABUTMENT SECTION

3/8" = 1'-0"

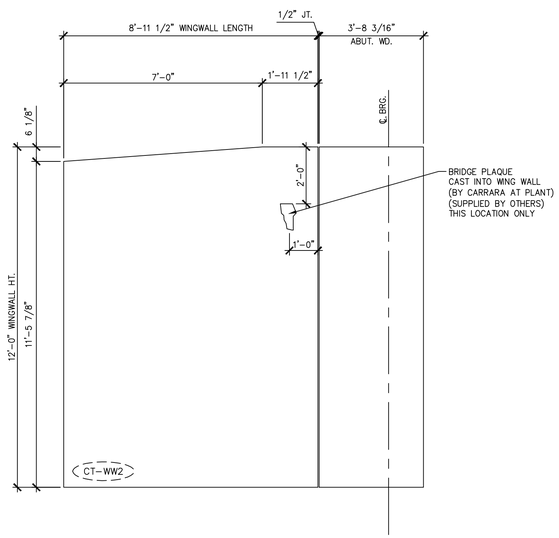

2 / F2 WINGWALL #2 ELEVATION

3/8" = 1'-0"

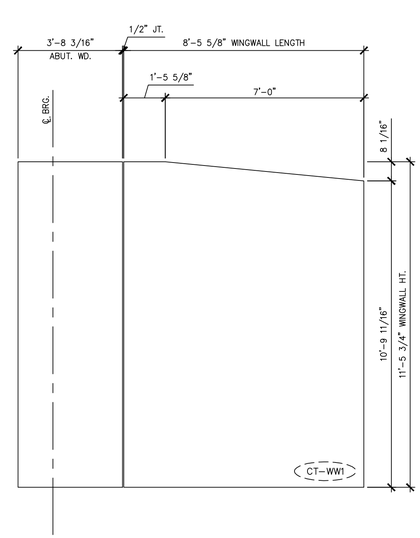

3 / F2 WINGWALL #1 ELEVATION

3/8" = 1'-0"

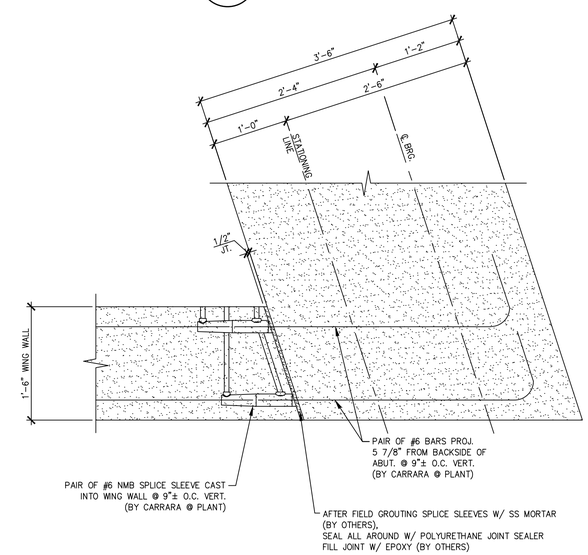

B / F2 WING WALL CONNECTION DETAIL

1" = 1'-0"

APPROVAL STAMP:

J.P. CARRARA & SONS INC.
Precast & Prestress Manufacturer
2464 CASE STR., MIDDLEBURY, VERMONT 05753 Phone:(802)388-6361 Fax:(802)388-9010

SHULTZ CONSTRUCTION
CONTRACTOR
BALLSTON SPA, NY

STATE OF VERMONT AGENCY OF TRANSPORTATION
COUNTY OF RUTLAND

TOWN OF CASTLETON
VT ROUTE 30 (RURAL MINOR ARTERIAL)
BRIDGE NO.: 93 PROJECT NO.: BRF 015-2(10)

ABUTMENT #1 ELEVATIONS

DATE:	APR. 16, 2015
SCALE:	NOTED
CHKD: R.M.	DFTM: PSS
JOB NO:	23456-015
DWG. NO:	F2

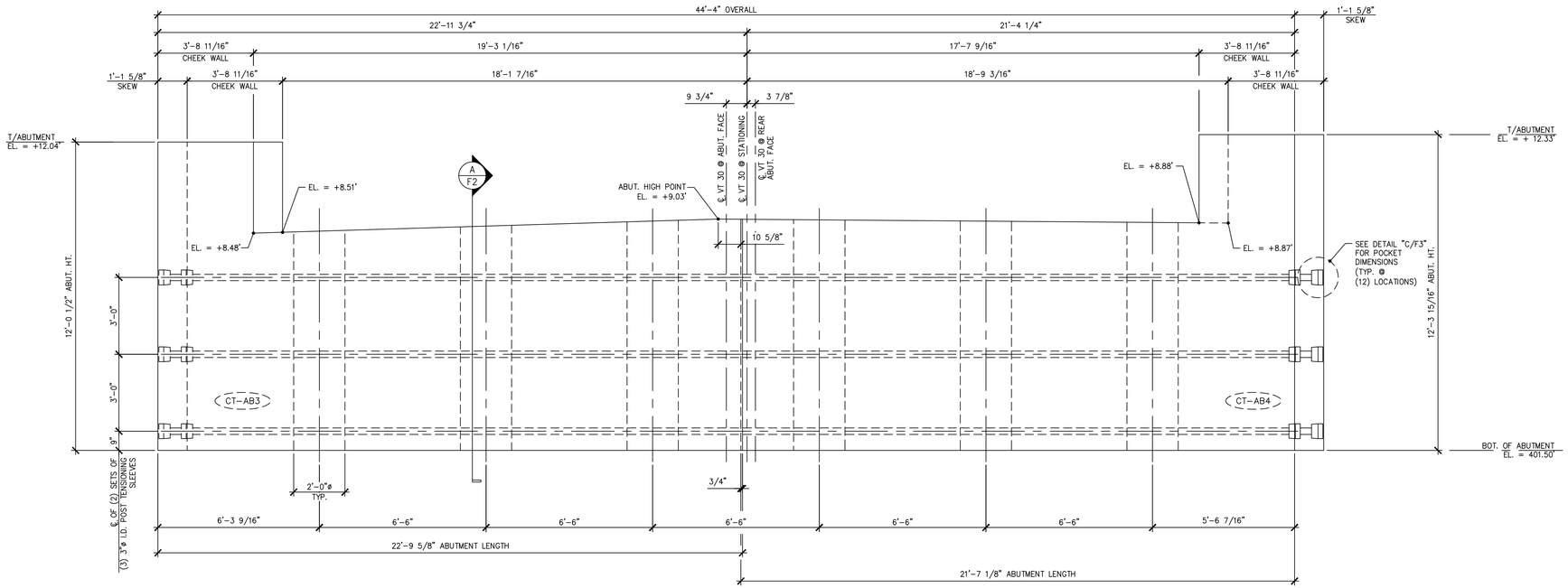

1 / F3 ABUTMENT #2 ELEVATION

3/8" = 1'-0"

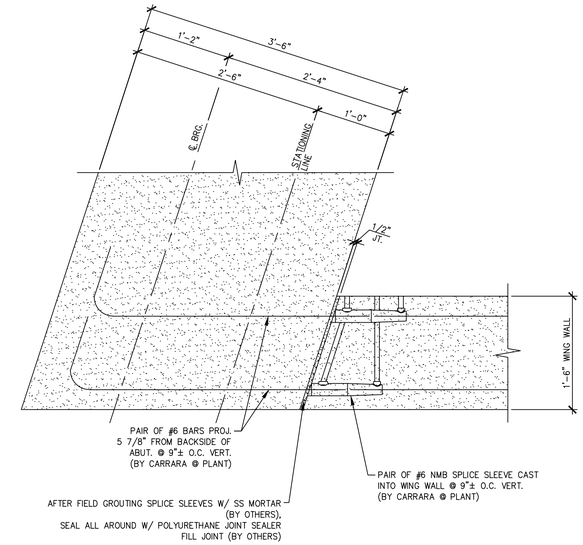

A / F3 WING WALL CONNECTION DETAIL

1" = 1'-0"

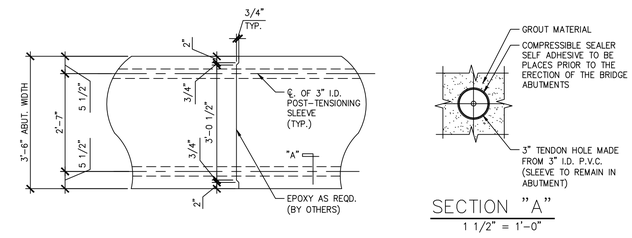

B / F3 MATCH CAST SECTION @ P.T. SLEEVE

1/2" = 1'-0"

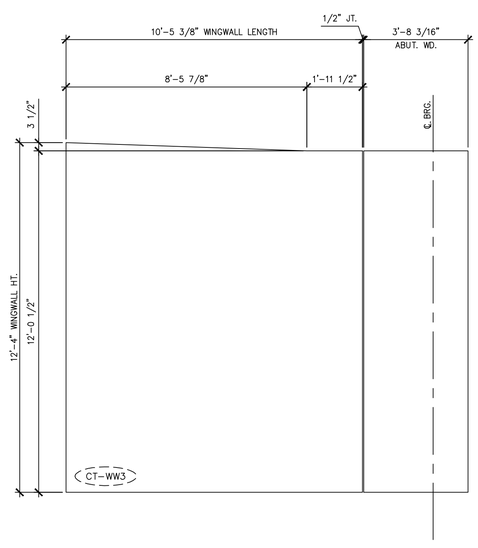

2 / F3 WINGWALL #3 ELEVATION

3/8" = 1'-0"

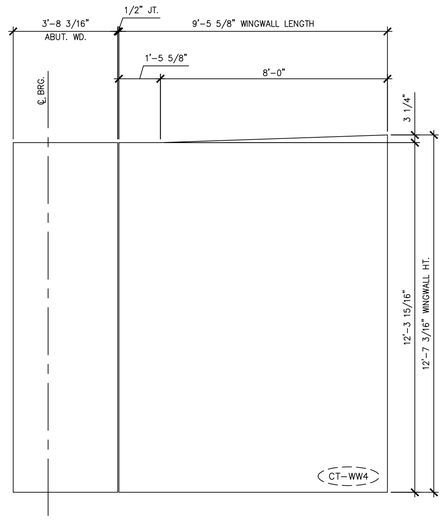

3 / F3 WINGWALL #4 ELEVATION

3/8" = 1'-0"

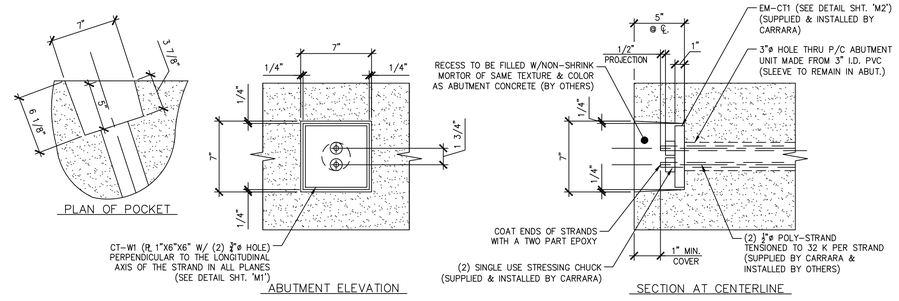

C / F3 POCKET DETAIL

1 1/2" = 1'-0"

APPROVAL STAMP:

J.P. CARRARA & SONS INC.
Precast & Prestress Manufacturer
2464 CASE STR., MIDDLEBURY, VERMONT 05753 Phone:(802)388-6361 Fax:(802)388-9010

SHULTZ CONSTRUCTION
CONTRACTOR
BALLSTON SPA, NY

STATE OF VERMONT AGENCY OF TRANSPORTATION COUNTY OF RUTLAND	DATE: APR. 16, 2015 SCALE: NOTED
TOWN OF CASTLETON VT ROUTE 30 (RURAL MINOR ARTERIAL) BRIDGE NO.: 93 PROJECT NO.: BRF 015-2(10)	CHKD: R.M. DFTM: PSS JOB NO: 23456-015
ABUTMENT #2 ELEVATION	DWG. NO: F3

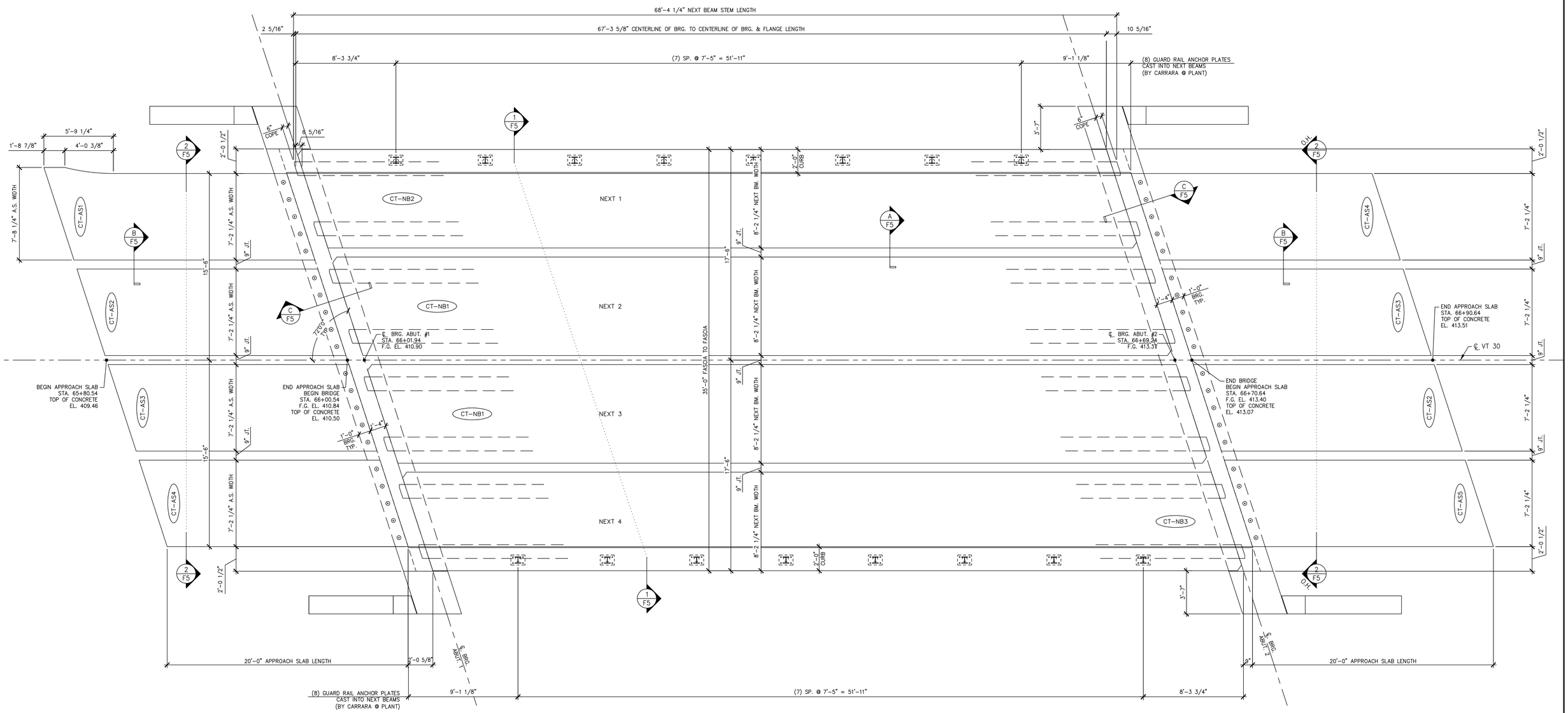

1/F4 NEXT BEAM & APPROACH SLAB LAYOUT

1/4" = 1'-0"

APPROVAL STAMP:

J.P. CARRARA & SONS INC.
Precast & Prestress Manufacturer
2464 CASE STR., MIDDLEBURY, VERMONT 05753 Phone:(802)388-6361 Fax:(802)388-9010

SHULTZ CONSTRUCTION
CONTRACTOR
BALLSTON SPA, NY

STATE OF VERMONT AGENCY OF TRANSPORTATION
COUNTY OF RUTLAND

TOWN OF CASTLETON
VT ROUTE 30 (RURAL MINOR ARTERIAL)
BRIDGE NO.: 93 PROJECT NO.: BRF 015-2(10)

PRESTRESSED NEXT BEAM & APPROACH SLAB LAYOUT

DATE:	APR. 16, 2015
SCALE:	NOTED
CHKD: R.M.	DFTM: PSS
JOB NO:	23456-015
DWG. NO:	F4

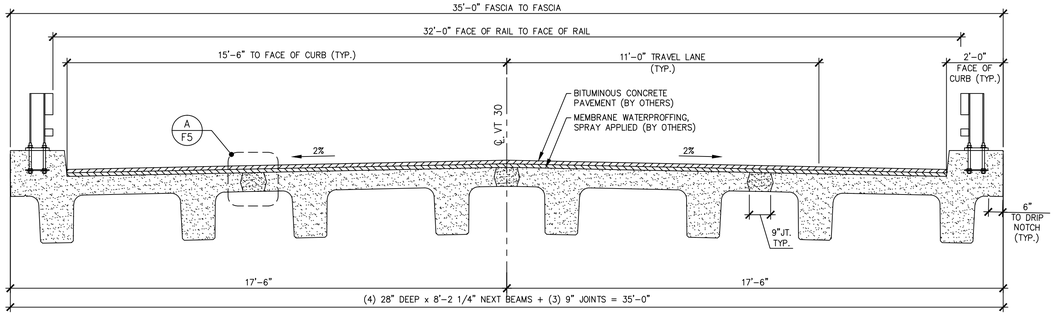

1 F5 TRANSVERSE NEXT BEAM SECTION

3/8" = 1'-0"

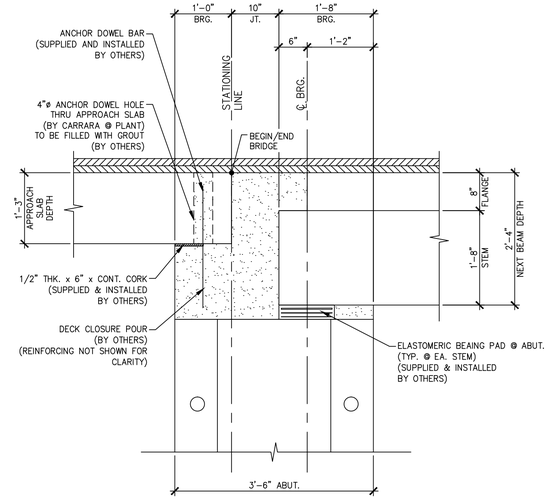

C F5 BEARING SECTION

3/4" = 1'-0"

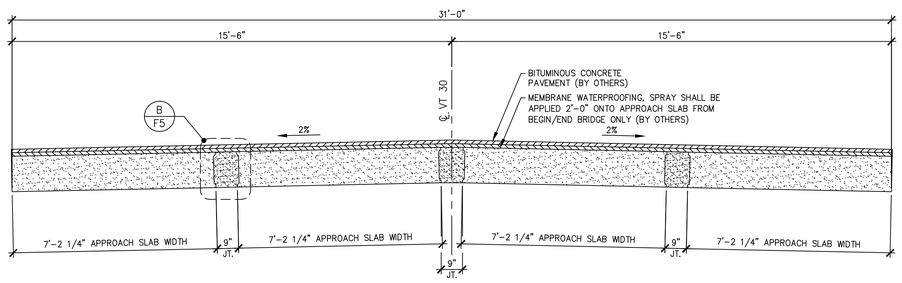

2 F5 TRANSVERSE APPROACH SLAB SECTION

3/8" = 1'-0"

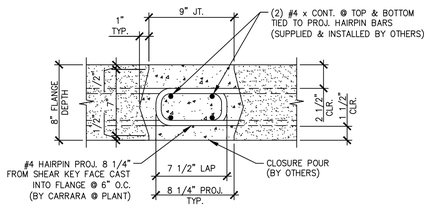

A F5 NEXT BEAM CLOSURE POUR

1 1/2" = 1'-0"

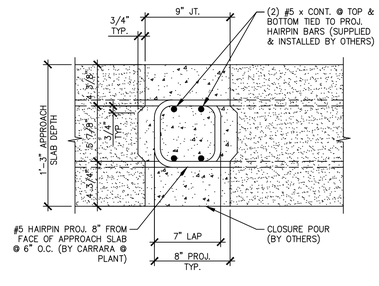

B F5 APPROACH SLAB CLOSURE POUR

1 1/2" = 1'-0"

APPROVAL STAMP:

J.P. CARRARA & SONS INC.
Precast & Prestress Manufacturer
2464 CASE STR., MIDDLEBURY, VERMONT 05753 Phone:(802)388-6361 Fax:(802)388-9010

SHULTZ CONSTRUCTION
CONTRACTOR
BALLSTON SPA, NY

STATE OF VERMONT AGENCY OF TRANSPORTATION
COUNTY OF RUTLAND

TOWN OF CASTLETON
VT ROUTE 30 (RURAL MINOR ARTERIAL)
BRIDGE NO.: 93 PROJECT NO.: BRF 015-2(10)

TRANSVERSE SECTION & DETAILS

DATE:	APR. 16, 2015
SCALE:	NOTED
CHKD: R.M.	DFTM: PSS
JOB NO:	23456-015
DWG. NO:	F5

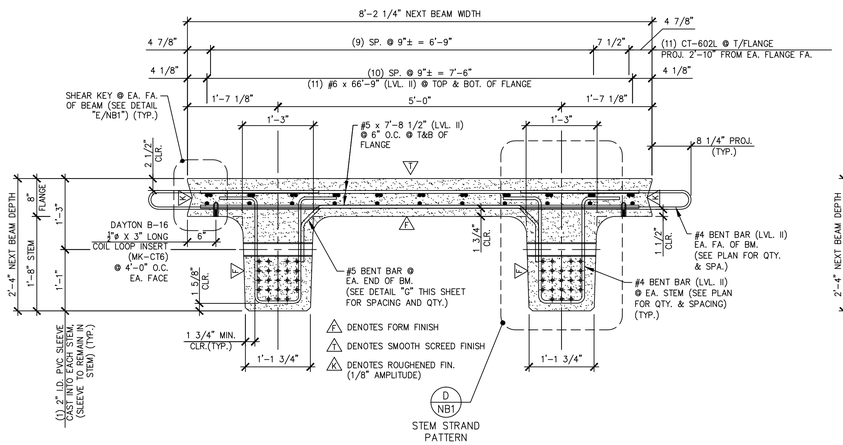

A NB1 DIMENSIONAL & REINFORCING SECTION

3/4" = 1'-0"

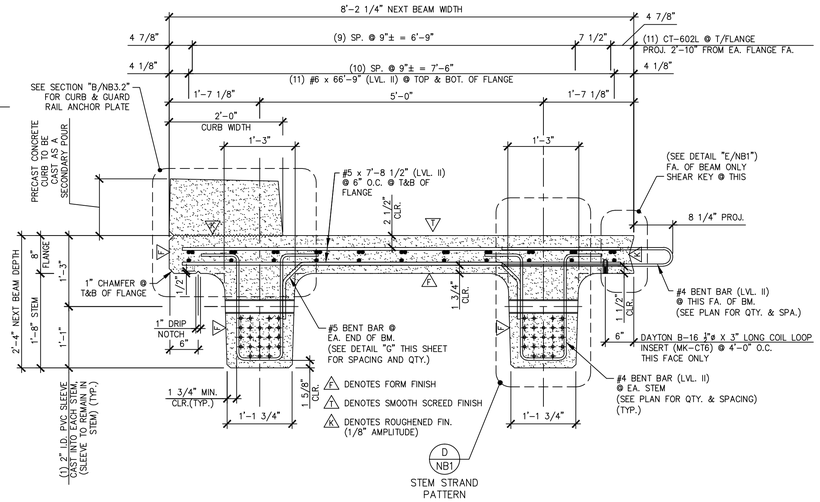

B NB1 DIMENSIONAL & REINFORCING SECTION

3/4" = 1'-0"

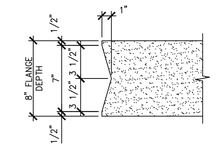

E NB1 SHEAR KEY DETAIL

1 1/2" = 1'-0"

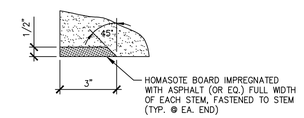

F NB1 HOMASOTE DETAIL

3" = 1'-0"

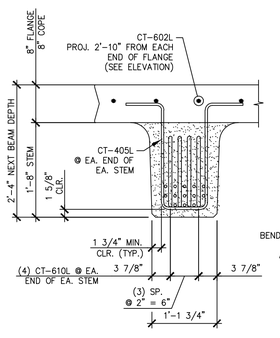

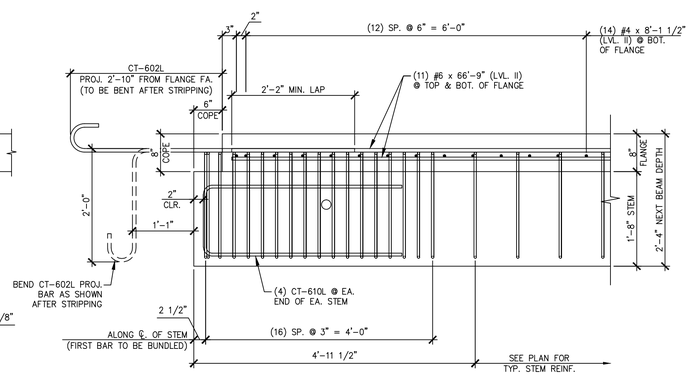

C NB1 END BLOCK STEM REINFORCING DETAILS

3/4" = 1'-0"

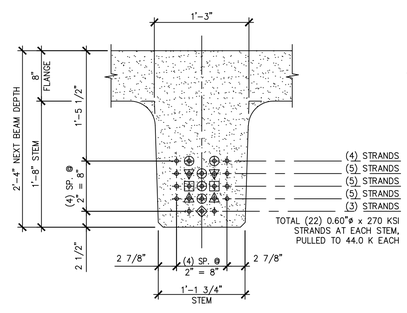

D NB1 STEM STRAND PATTERN

1" = 1'-0"

PRESTRESSING NOTATIONS

- DENOTES STRAIGHT STRANDS TO BE CUT FLUSH WITH EA. END OF EA. STEM
- DENOTES STRAIGHT STRANDS TO BE DEBONDED 6" FROM EA. END OF EA. STEM
- DENOTES STRAIGHT STRANDS TO BE DEBONDED 4'-0" FROM EA. END OF EA. STEM
- DENOTES STRAIGHT STRANDS TO BE DEBONDED 6'-0" FROM EA. END OF EA. STEM
- DENOTES STRAIGHT STRANDS TO BE DEBONDED 8'-0" FROM EA. END OF EA. STEM
- DENOTES STRAIGHT STRANDS TO BE DEBONDED 10'-0" FROM EA. END OF EA. STEM

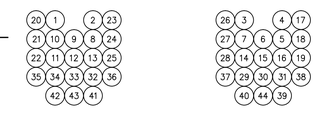

DETENSIONING SCHEDULE

N.T.S.

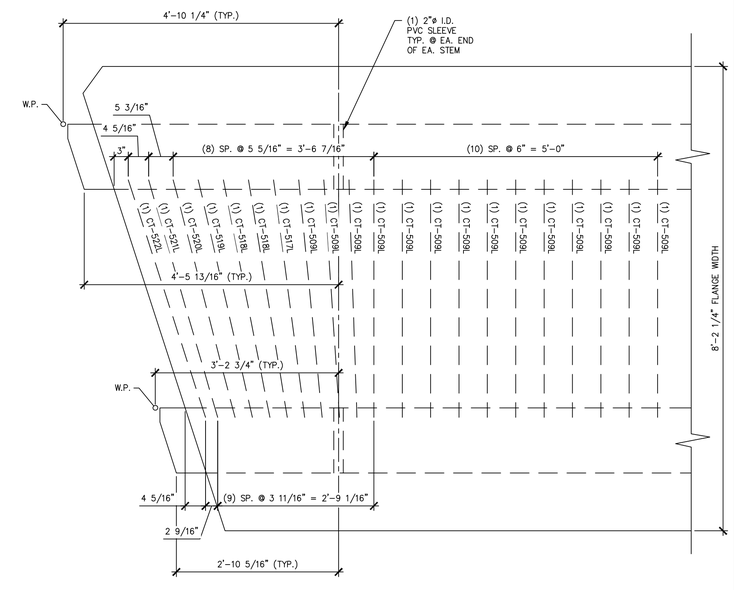

G NB1 ADDITIONAL END ZONE REINFORCING (@ BOTTOM OF FLANGE) & LOCATION OF PVC SLEEVES (@ STEM)

3/4" = 1'-0"

APPROVAL STAMP:

J.P. CARRARA & SONS INC.
Precast & Prestress Manufacturer
2464 CASE STR., MIDDLEBURY, VERMONT 05753 Phone:(802)388-6361 Fax:(802)388-9010

SHULTZ CONSTRUCTION
CONTRACTOR
BALLSTON SPA, NY

STATE OF VERMONT AGENCY OF TRANSPORTATION
COUNTY OF RUTLAND

TOWN OF CASTLETON
VT ROUTE 30 (RURAL MINOR ARTERIAL)
BRIDGE NO.: 93 PROJECT NO.: BRF 015-2(10)

PRESTRESSED NEXT BEAM DETAILS

DATE:	APR. 17, 2015
SCALE:	NOTED
CHKD: R.M.	DFTM: PSS
JOB NO:	23456-015
DWG. NO:	NB1

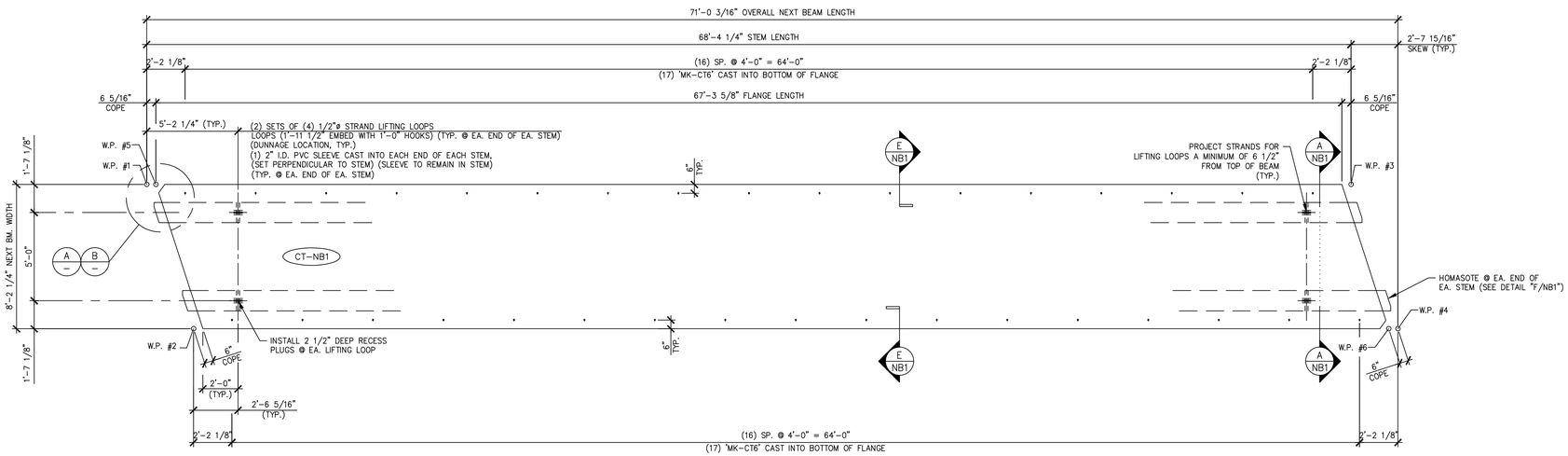

1 NB2 DIMENSIONAL PLAN VIEW IN FORM

1/4" = 1'-0"

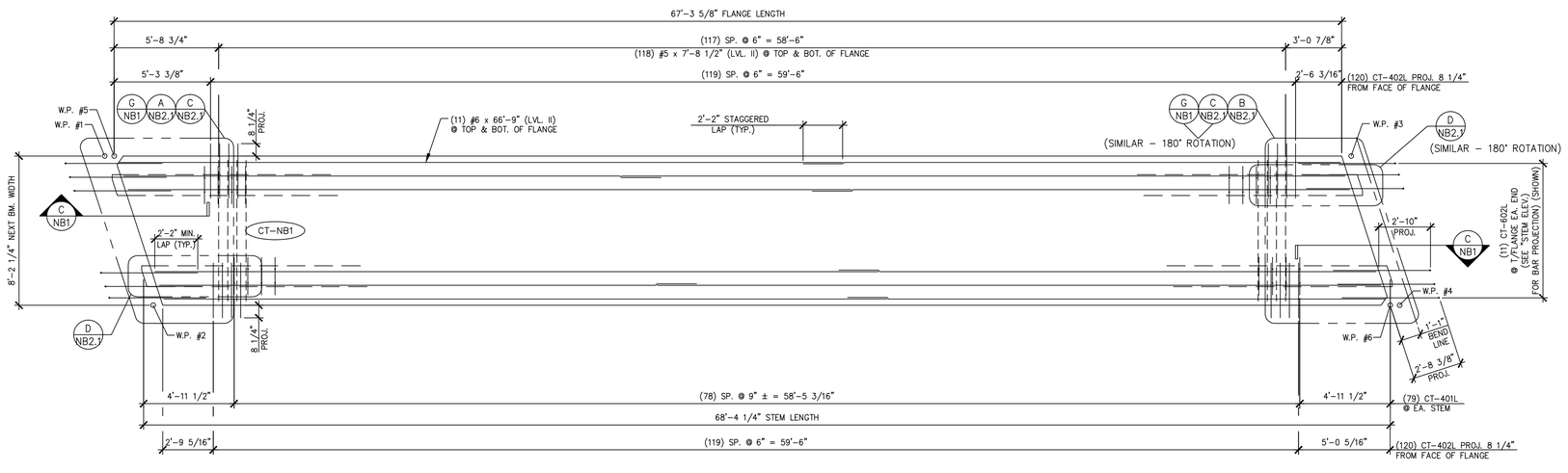

2 NB2 REINFORCING PLAN VIEW IN FORM

1/4" = 1'-0"

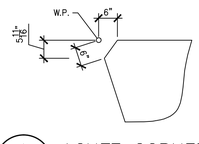

A NB2 ACUTE CORNER BLOCKOUT DETAIL (FOR FLANGE)

1/2" = 1'-0"

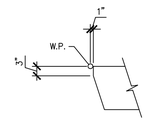

B NB2 ACUTE CORNER BLOCKOUT DETAIL (FOR STEM)

1/2" = 1'-0"

MARK: CT-NB1	QTY.: 2	WT.: 48.19 T	VOL.: 23.80 cy

MATERIAL LIST / NEXT BEAM

ITEM	MARK	DESCRIPTION	QTY.
1	CT-401L	#4 BENT BAR (LEVEL II, DUAL COATED)	210
2	CT-402L	#4 BENT BAR (LEVEL II, DUAL COATED)	240
3	CT-404L	#4 BENT BAR (LEVEL II, DUAL COATED)	4
4	CT-405L	#4 BENT BAR (LEVEL II, DUAL COATED)	16
5	CT-407L	#4 BENT BAR (LEVEL II, DUAL COATED)	13
6	CT-408L	#4 BENT BAR (LEVEL II, DUAL COATED)	5
7	CT-409L	#4 BENT BAR (LEVEL II, DUAL COATED)	4
8	CT-410L	#4 BENT BAR (LEVEL II, DUAL COATED)	5
9	CT-509L	#5 BENT BAR (LEVEL II, DUAL COATED)	28
10	CT-517L	#5 BENT BAR (LEVEL II, DUAL COATED)	2
11	CT-518L	#5 BENT BAR (LEVEL II, DUAL COATED)	4
12	CT-519L	#5 BENT BAR (LEVEL II, DUAL COATED)	2
13	CT-520L	#5 BENT BAR (LEVEL II, DUAL COATED)	2
14	CT-521L	#5 BENT BAR (LEVEL II, DUAL COATED)	2
15	CT-522L	#5 BENT BAR (LEVEL II, DUAL COATED)	2
16	CT-602L	#6 BENT BAR (LEVEL II, DUAL COATED)	22
17	CT-610L	#6 BENT BAR (LEVEL II, DUAL COATED)	16
18			
19			
20			
21			
22		#4 x 8'-1 1/2" (LEVEL II, DUAL COATED)	28
23		#5 x 7'-8 1/2" (LEVEL II, DUAL COATED)	244
24		#5 x 7'-9" (LEVEL II, DUAL COATED)	12
25		#5 x 7'-10" (LEVEL II, DUAL COATED)	8
26		#5 x 7'-11" (LEVEL II, DUAL COATED)	8
27		#5 x 8'-0" (LEVEL II, DUAL COATED)	8
28			
29		#6 x 66'-9" (W/ (1) 2'-2" STAGGERED LAP) (40' + 28'-11") (LVL. II, DUAL COATED)	22
30			
31			
32			
33		2"ø I.D. PVC SLEEVE	4
34		SET OF (4) 1/2"ø x 270 KSI STRAND LIFTING LOOPS	4
35	MK-CT6	DAYTON B-16 1/2"ø x 3" LONG COIL LOOP INSERTS (ELECTROPLATED GALV.)	34

APPROVAL STAMP:

J.P. CARRARA & SONS INC.
Precast & Prestress Manufacturer
2464 CASE STR., MIDDLEBURY, VERMONT 05753 Phone:(802)388-6361 Fax:(802)388-9010

SHULTZ CONSTRUCTION
CONTRACTOR
BALLSTON SPA, NY

STATE OF VERMONT AGENCY OF TRANSPORTATION
COUNTY OF RUTLAND

TOWN OF CASTLETON
VT ROUTE 30 (RURAL MINOR ARTERIAL)
BRIDGE NO.: 93 PROJECT NO.: BRF 015-2(10)

PRESTRESSED NEXT BEAM DETAILS "CT-NB1"

DATE: APR. 17, 2015
SCALE: NOTED
CHKD: R.M. DFTM: PSS
JOB NO: 23456-015
DWG. NO: NB2

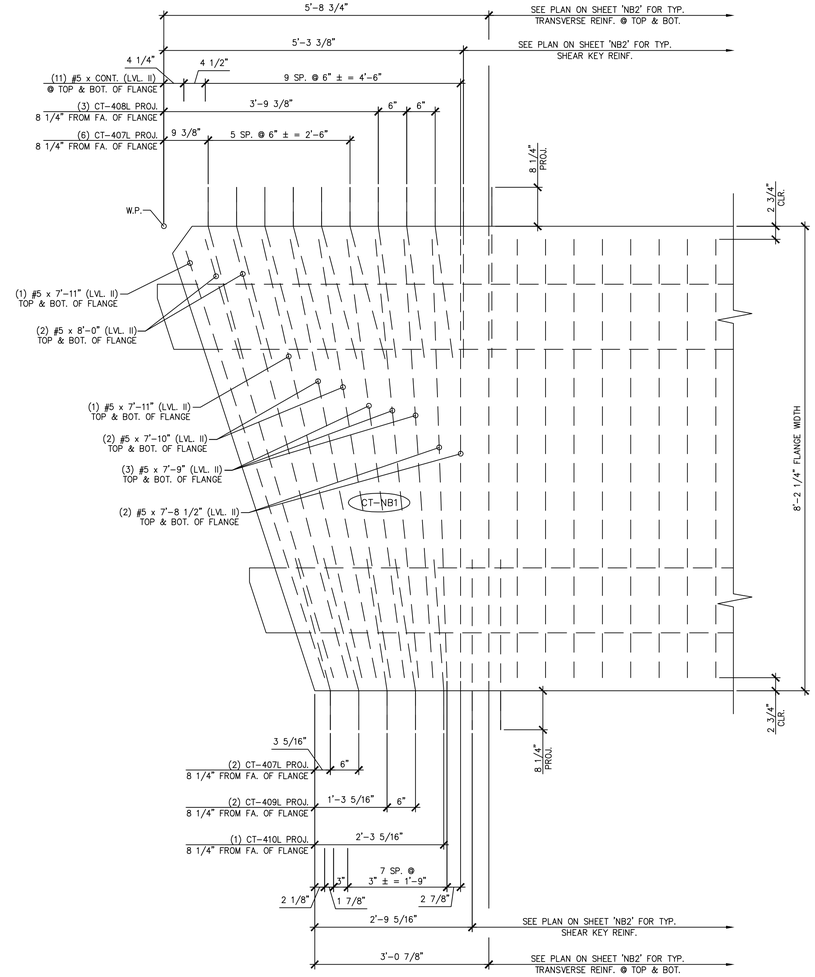

A NB2.1 BEAM END TRANSVERSE/SHEAR KEY REINFORCING

3/4" = 1'-0"

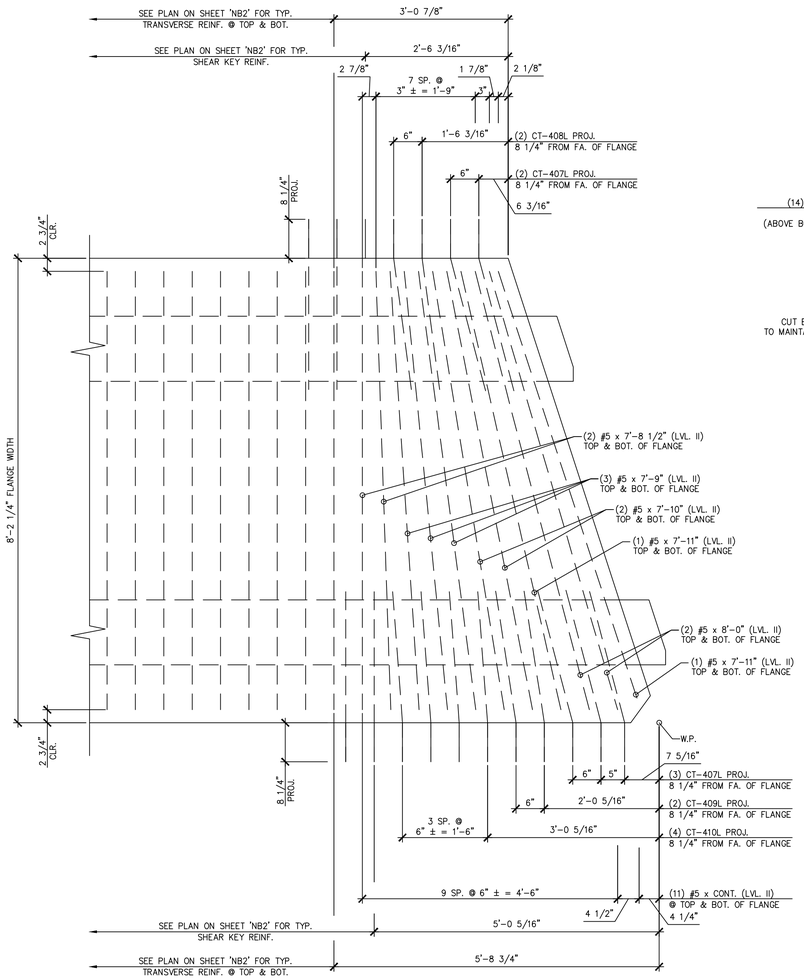

B NB2.1 BEAM END TRANSVERSE/SHEAR KEY REINFORCING

3/4" = 1'-0"

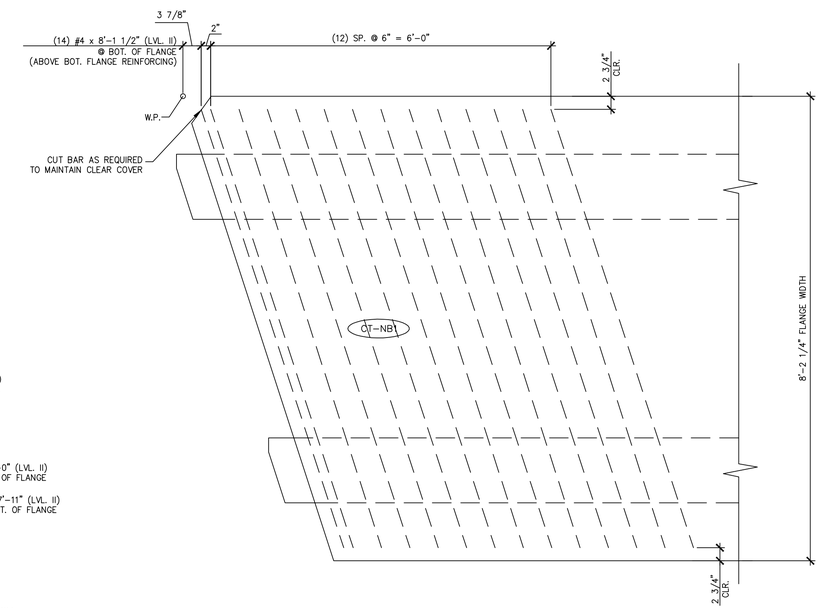

C NB2.1 ADDITIONAL TRANSVERSE REINFORCING AT BOTTOM OF FLANGE

3/4" = 1'-0"

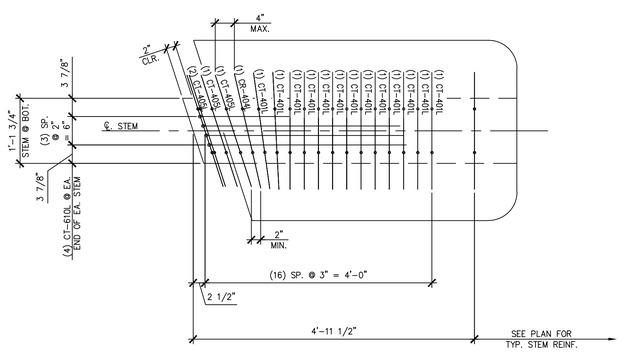

D NB2.1 BEAM END STEM REINFORCING

3/4" = 1'-0"

APPROVAL STAMP:

J.P. CARRARA & SONS INC.
Precast & Prestress Manufacturer
2464 CASE STR., MIDDLEBURY, VERMONT 05753 Phone:(802)388-6361 Fax:(802)388-9010

SHULTZ CONSTRUCTION
CONTRACTOR
BALLSTON SPA, NY

STATE OF VERMONT AGENCY OF TRANSPORTATION
COUNTY OF RUTLAND

TOWN OF CASTLETON
VT ROUTE 30 (RURAL MINOR ARTERIAL)
BRIDGE NO.: 93 PROJECT NO.: BRF 015-2(10)

PRESTRESSED NEXT BEAM DETAILS "CT-NB1"

DATE: APR. 17, 2015
SCALE: NOTED
CHKD: R.M. DFTM: PSS
JOB NO: 23456-015
DWG. NO: NB2.1

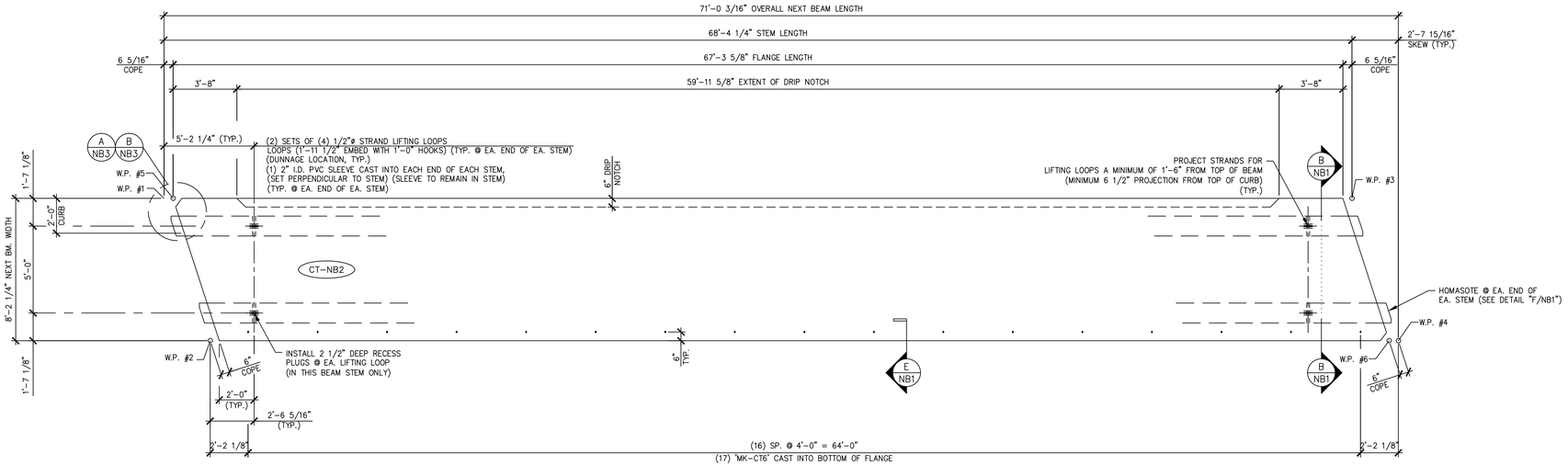

1 NB3 DIMENSIONAL PLAN VIEW IN FORM

(SEE SHEET 'NB3.2' FOR DETAILS OF PRECAST CONCRETE CURB TO BE CAST AS SECONDARY POUR) 1/4" = 1'-0"

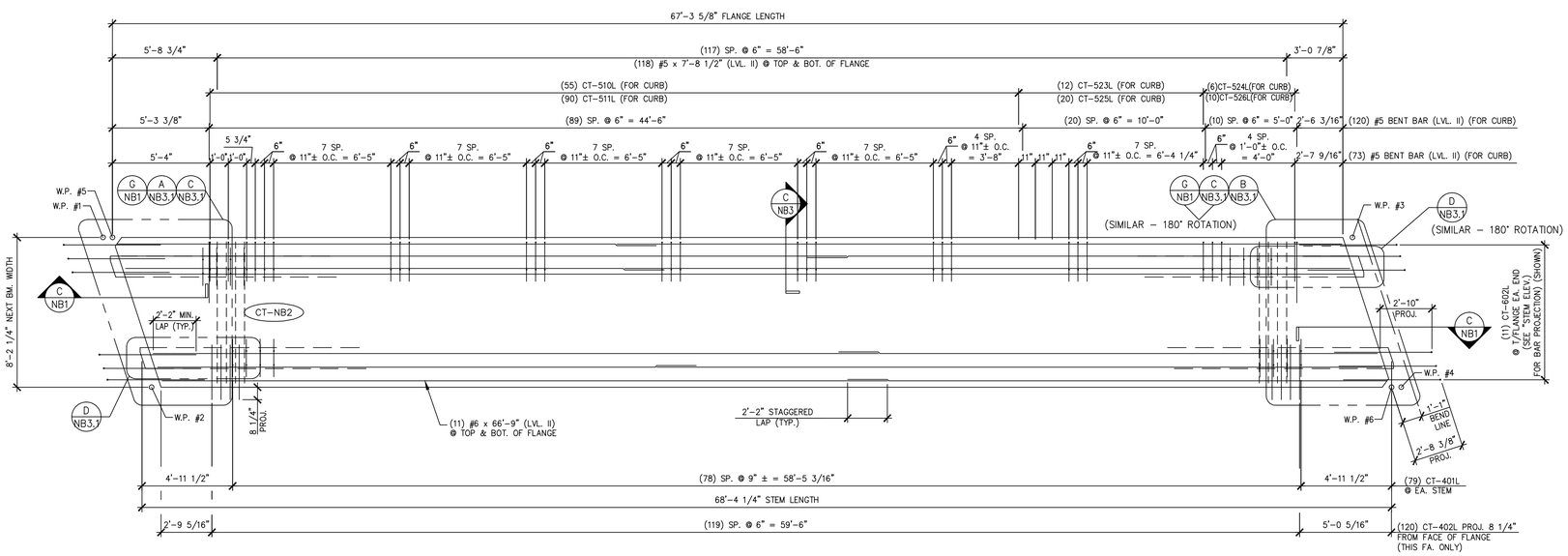

2 NB3 REINFORCING PLAN VIEW IN FORM

(SEE SHEET 'NB3.2' FOR ADDITIONAL PRECAST CONCRETE CURB REINFORCEMENT) 1/4" = 1'-0"

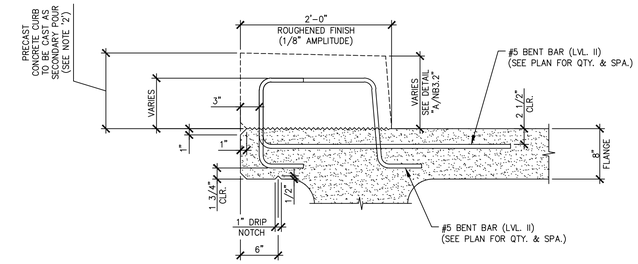

C NB3 SECTION FOR CURB REINFORCEMENT

TYP. BEAM REINF. NOT SHOWN FOR CLARITY 1" = 1'-0"

SHOP NOTES:

1. TOTAL BEAM WEIGHT INCLUDES THE WEIGHT OF PRECAST CONCRETE CURB TO BE CAST AS A SECONDARY POUR.
2. SEE SHEET 'NB3.2' FOR PRECAST CONCRETE CURB DETAILS TO BE CAST AS A SECONDARY POUR.

MARK: CT-NB2	QTY.: 1	WT.: 56.90 T	VOL.: 28.10 cy

MATERIAL LIST / NEXT BEAM

ITEM	MARK	DESCRIPTION	QTY.
1	CT-401L	#4 BENT BAR (LEVEL II, DUAL COATED)	210
2	CT-402L	#4 BENT BAR (LEVEL II, DUAL COATED)	120
3	CT-404L	#4 BENT BAR (LEVEL II, DUAL COATED)	4
4	CT-405L	#4 BENT BAR (LEVEL II, DUAL COATED)	16
5	CT-407L	#4 BENT BAR (LEVEL II, DUAL COATED)	5
6	CT-409L	#4 BENT BAR (LEVEL II, DUAL COATED)	4
7	CT-410L	#4 BENT BAR (LEVEL II, DUAL COATED)	5
8	CT-509L	#5 BENT BAR (LEVEL II, DUAL COATED)	28
9	CT-510L	#5 BENT BAR (LEVEL II, DUAL COATED)	57
10	CT-511L	#5 BENT BAR (LEVEL II, DUAL COATED)	100
11	CT-512L	#5 BENT BAR (LEVEL II, DUAL COATED)	3
12	CT-517L	#5 BENT BAR (LEVEL II, DUAL COATED)	2
13	CT-518L	#5 BENT BAR (LEVEL II, DUAL COATED)	4
14	CT-519L	#5 BENT BAR (LEVEL II, DUAL COATED)	2
15	CT-520L	#5 BENT BAR (LEVEL II, DUAL COATED)	2
16	CT-521L	#5 BENT BAR (LEVEL II, DUAL COATED)	2
17	CT-522L	#5 BENT BAR (LEVEL II, DUAL COATED)	2
18	CT-523L	#5 BENT BAR (LEVEL II, DUAL COATED)	12
19	CT-524L	#5 BENT BAR (LEVEL II, DUAL COATED)	8
20	CT-525L	#5 BENT BAR (LEVEL II, DUAL COATED)	20
21	CT-526L	#5 BENT BAR (LEVEL II, DUAL COATED)	15
22	CT-602L	#6 BENT BAR (LEVEL II, DUAL COATED)	22
23	CT-610L	#6 BENT BAR (LEVEL II, DUAL COATED)	16
24			
25			
26		#4 x 8'-1 1/2" (LEVEL II, DUAL COATED)	28
27		#5 x 7'-8 1/2" (LEVEL II, DUAL COATED)	244
28		#5 x 7'-9" (LEVEL II, DUAL COATED)	12
29		#5 x 7'-10" (LEVEL II, DUAL COATED)	8
30		#5 x 7'-11" (LEVEL II, DUAL COATED)	8
31		#5 x 8'-0" (LEVEL II, DUAL COATED)	8
32		#6 x 66'-9" (W/ (1) 2'-2" STAGGERED LAP) (40' + 28'-11") (LVL. II, DUAL COATED)	22
33		#5 x 66'-9" (W/ (1) 2'-2" STAGGERED LAP) (40' + 28'-11") (LVL. II, DUAL COATED)	3
34			
35		2"ø I.D. PVC SLEEVE	4
36		SET OF (4) 1/2"ø x 270 KSI STRAND LIFTING LOOPS	4
37		GUARD RAIL ANCHOR PLATE (GALV.) (SUPPLIED BY OTHERS)	8
38	MK-CT6	DAYTON B-16 1/2"ø x 3" LONG COIL LOOP INSERTS (ELECTROPLATED GALV.)	17
39			

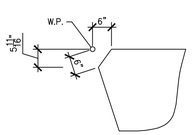

A NB3 ACUTE CORNER BLOCKOUT DETAIL (FOR FLANGE) 1/2" = 1'-0"

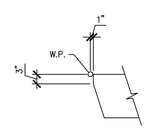

B NB3 ACUTE CORNER BLOCKOUT DETAIL (FOR STEM) 1/2" = 1'-0"

APPROVAL STAMP:

J.P. CARRARA & SONS INC.
Precast & Prestress Manufacturer
2464 CASE STR., MIDDLEBURY, VERMONT 05753 Phone:(802)388-6361 Fax:(802)388-9010

SHULTZ CONSTRUCTION
CONTRACTOR
BALLSTON SPA, NY

STATE OF VERMONT AGENCY OF TRANSPORTATION
COUNTY OF RUTLAND

DATE: APR. 17, 2015
SCALE: NOTED

TOWN OF CASTLETON
VT ROUTE 30 (RURAL MINOR ARTERIAL)
BRIDGE NO.: 93 PROJECT NO.: BRF 015-2(10)

CHKD: R.M. DFTM: PSS
JOB NO: 23456-015

PRESTRESSED NEXT BEAM DETAILS "CT-NB2"

DWG. NO: NB3

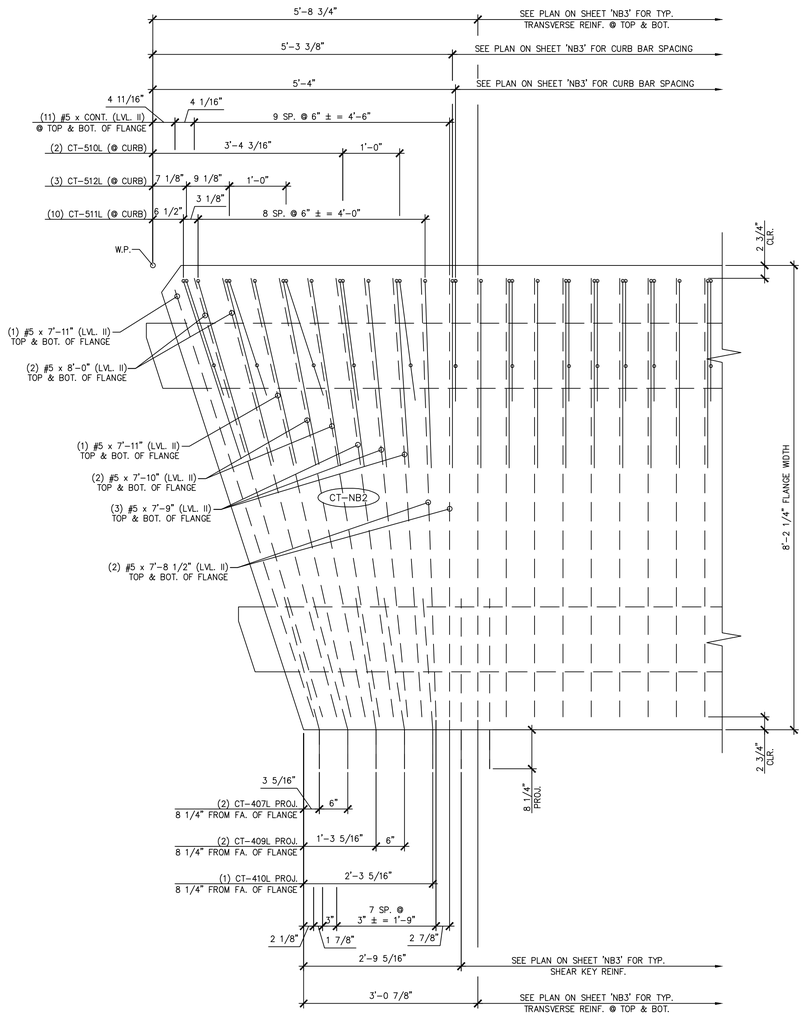

A NB3.1 BEAM END TRANSVERSE/SHEAR KEY/CURB REINFORCING

3/4" = 1'-0"

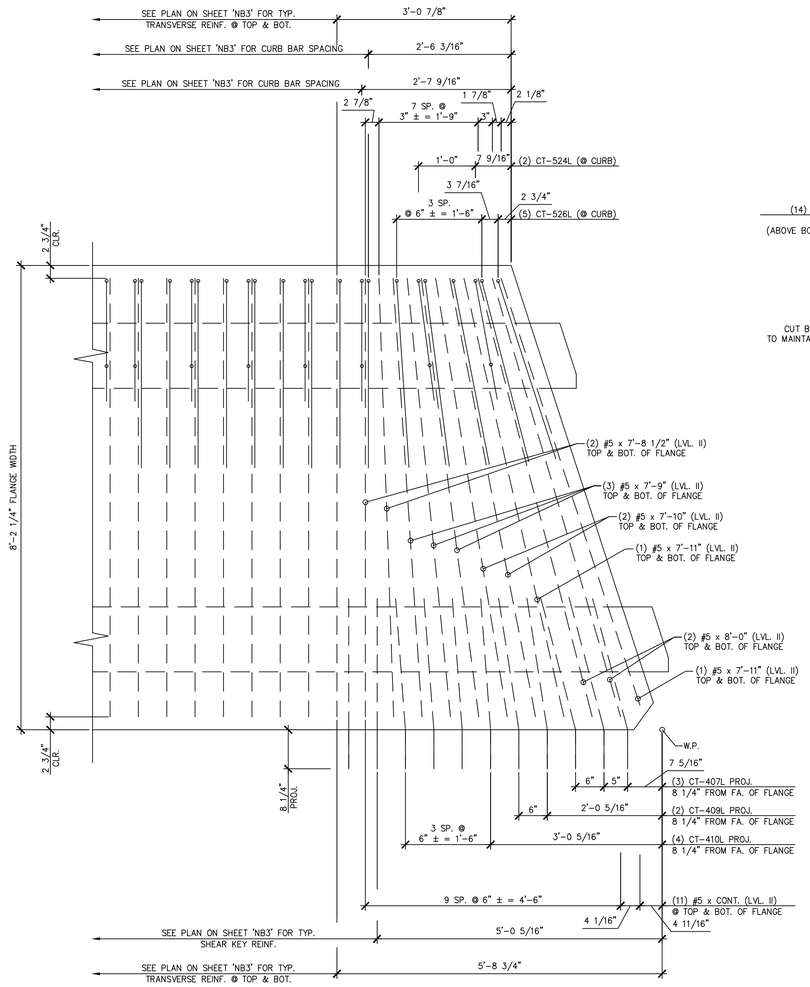

B NB3.1 BEAM END TRANSVERSE/SHEAR KEY/CURB REINFORCING

3/4" = 1'-0"

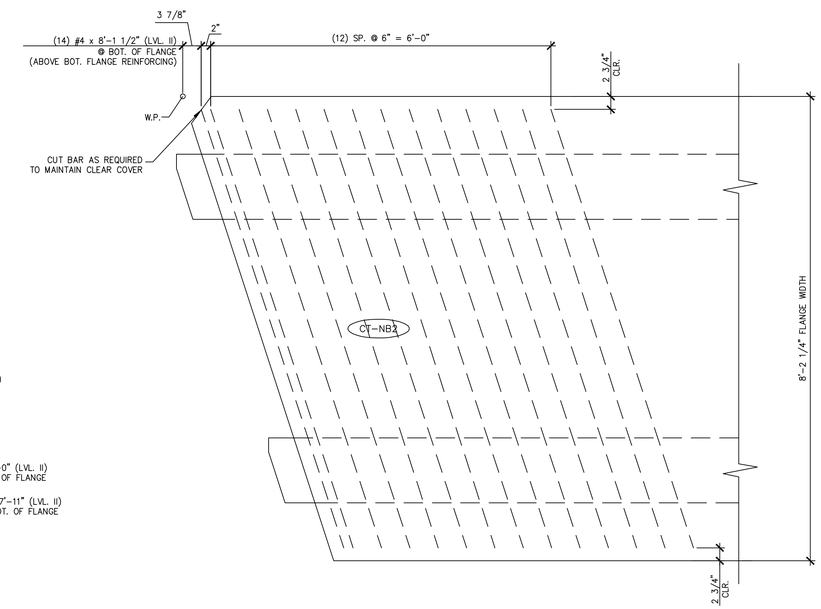

C NB3.1 ADDITIONAL TRANSVERSE REINFORCING AT BOTTOM OF FLANGE

3/4" = 1'-0"

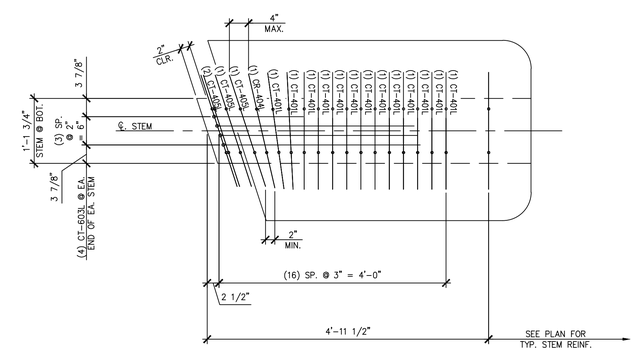

D NB3.1 BEAM END STEM REINFORCING

3/4" = 1'-0"

APPROVAL STAMP:

J.P. CARRARA & SONS INC.
Precast & Prestress Manufacturer
2464 CASE STR., MIDDLEBURY, VERMONT 05753 Phone:(802)388-6361 Fax:(802)388-9010

SHULTZ CONSTRUCTION
CONTRACTOR
BALLSTON SPA, NY

STATE OF VERMONT AGENCY OF TRANSPORTATION
COUNTY OF RUTLAND

DATE: APR. 17, 2015
SCALE: NOTED

TOWN OF CASTLETON
VT ROUTE 30 (RURAL MINOR ARTERIAL)
BRIDGE NO.: 93 PROJECT NO.: BRF 015-2(10)

CHKD: R.M. DFTM: PSS
JOB NO: 23456-015

PRESTRESSED NEXT BEAM DETAILS "CT-NB2"

DWG. NO: NB3.1

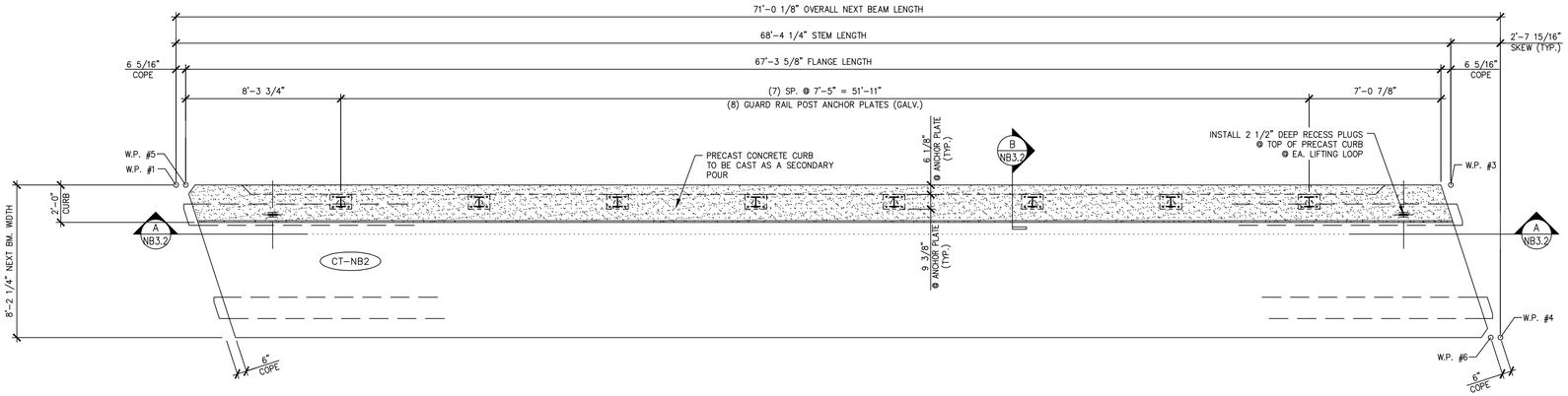

1 NB3.2 DIMENSIONAL PLAN VIEW FOR SECONDARY POUR

1/4" = 1'-0"

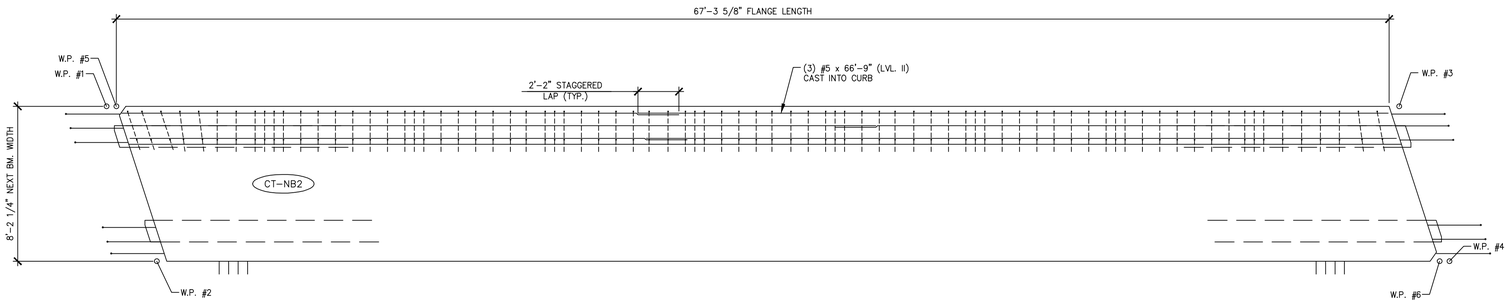

2 NB3.2 REINFORCING PLAN VIEW FOR SECONDARY POUR

1/4" = 1'-0"

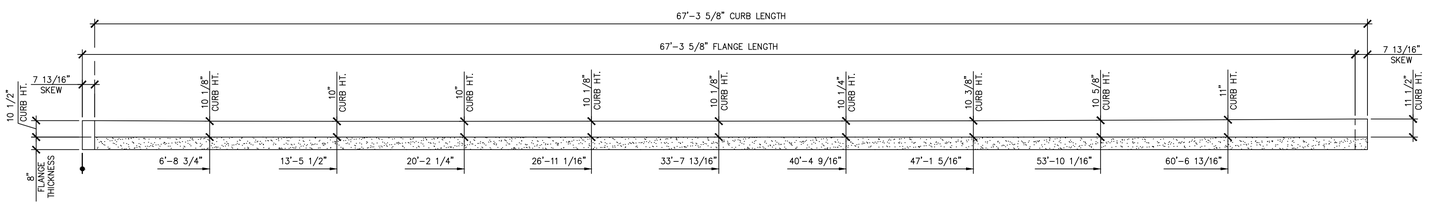

A NB3.2 CURB HEIGHT DETAIL

1/4" = 1'-0"

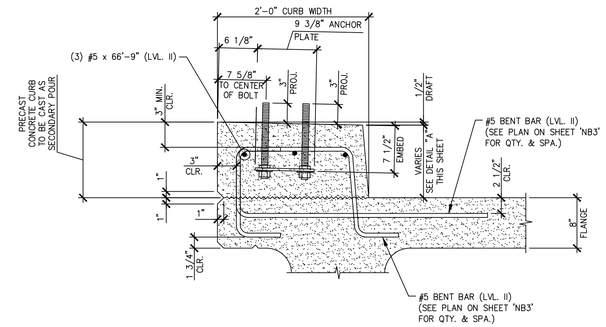

B NB3.2 CURB & GUARD RAIL ANCHOR PLATE SECTION

1" = 1'-0"

TYP. BEAM REINF. NOT SHOWN FOR CLARITY

APPROVAL STAMP:

J.P. CARRARA & SONS INC.
Precast & Prestress Manufacturer
2464 CASE STR., MIDDLEBURY, VERMONT 05753 Phone:(802)388-6361 Fax:(802)388-9010

SHULTZ CONSTRUCTION
CONTRACTOR
BALLSTON SPA, NY

STATE OF VERMONT AGENCY OF TRANSPORTATION
COUNTY OF RUTLAND

TOWN OF CASTLETON
VT ROUTE 30 (RURAL MINOR ARTERIAL)
BRIDGE NO.: 93 PROJECT NO.: BRF 015-2(10)

PRESTRESSED NEXT BEAM DETAILS "CT-NB2"

DATE: APR. 17, 2015
SCALE: NOTED
CHKD: R.M. DFTM: PSS
JOB NO: 23456-015
DWG. NO: NB3.2

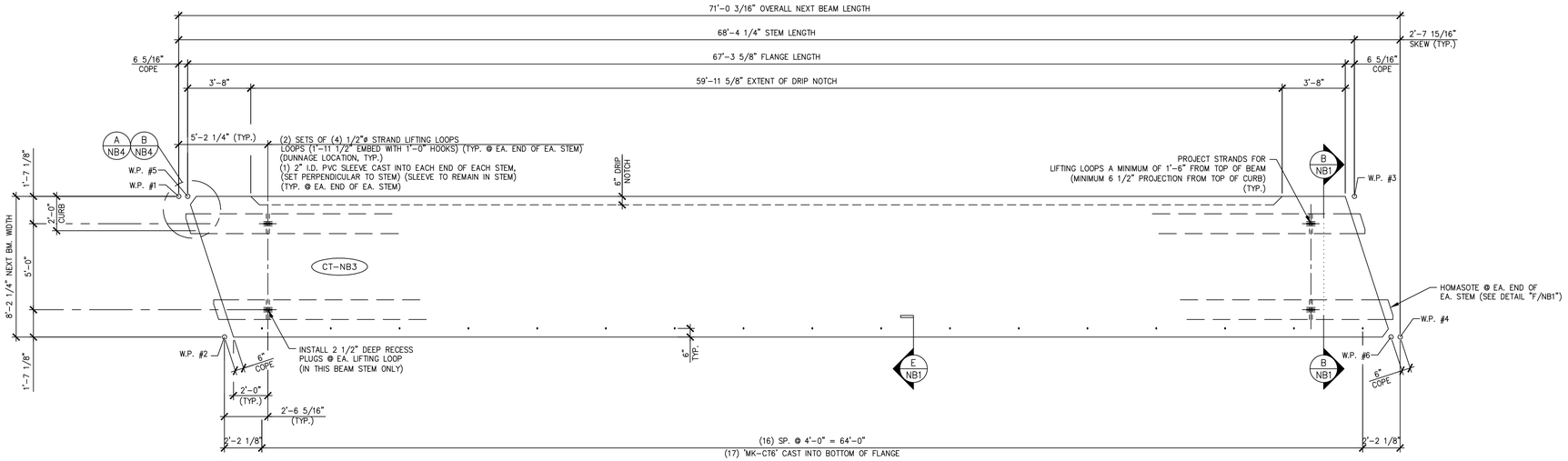

1 NB4 DIMENSIONAL PLAN VIEW IN FORM
(SEE SHEET 'NB4.2' FOR DETAILS OF PRECAST CONCRETE CURB TO BE CAST AS SECONDARY POUR) 1/4" = 1'-0"

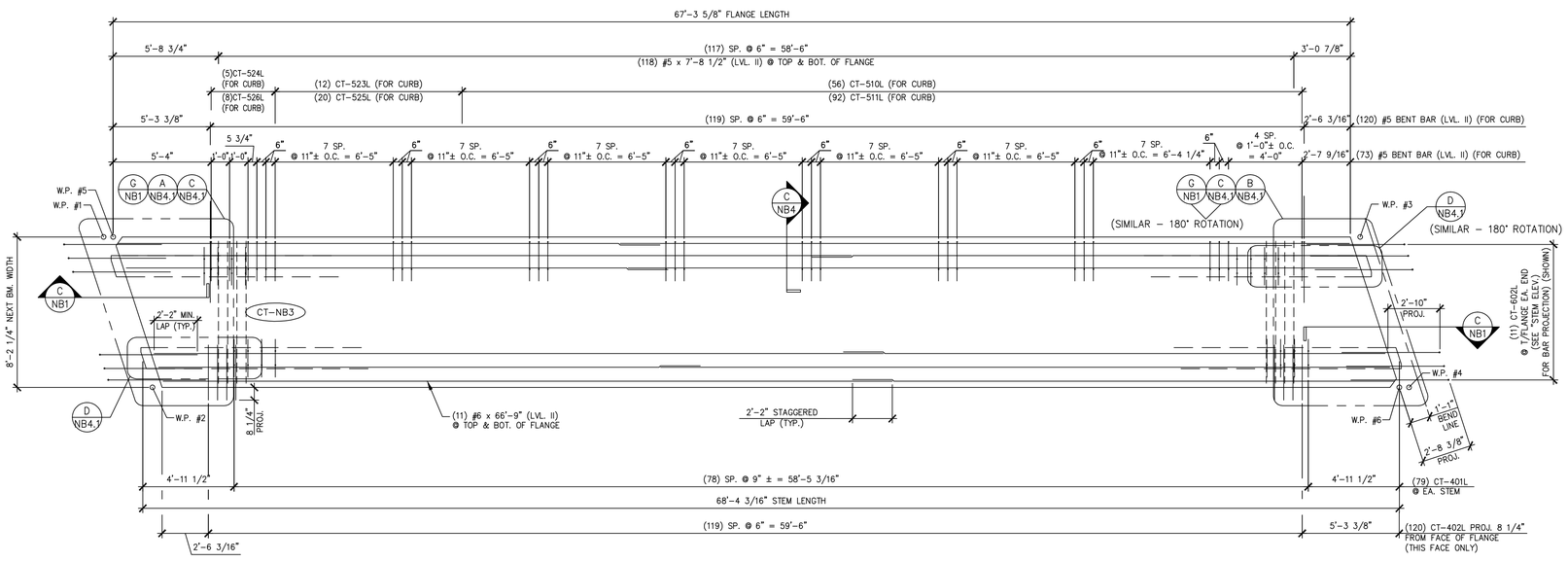

2 NB4 REINFORCING PLAN VIEW IN FORM
(SEE SHEET 'NB4.2' FOR ADDITIONAL PRECAST CONCRETE CURB REINFORCEMENT) 1/4" = 1'-0"

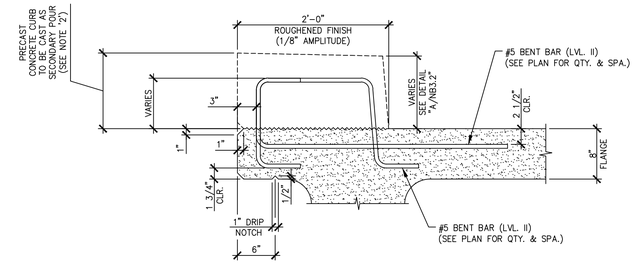

C NB4 SECTION FOR CURB REINFORCEMENT
TYP. BEAM REINF. NOT SHOWN FOR CLARITY 1" = 1'-0"

SHOP NOTES:
1. TOTAL BEAM WEIGHT INCLUDES THE WEIGHT OF PRECAST CONCRETE CURB TO BE CAST AS A SECONDARY POUR.
2. SEE SHEET 'NB4.2' FOR PRECAST CONCRETE CURB DETAILS TO BE CAST AS A SECONDARY POUR.

MARK: CT-NB3	QTY.: 1	WT.: 56.90 T	VOL.: 28.10 cy

MATERIAL LIST / NEXT BEAM

ITEM	MARK	DESCRIPTION	QTY.
1	CT-401L	#4 BENT BAR (LEVEL II, DUAL COATED)	210
2	CT-402L	#4 BENT BAR (LEVEL II, DUAL COATED)	120
3	CT-404L	#4 BENT BAR (LEVEL II, DUAL COATED)	4
4	CT-405L	#4 BENT BAR (LEVEL II, DUAL COATED)	16
5	CT-407L	#4 BENT BAR (LEVEL II, DUAL COATED)	8
6	CT-408L	#4 BENT BAR (LEVEL II, DUAL COATED)	5
7	CT-509L	#5 BENT BAR (LEVEL II, DUAL COATED)	28
8	CT-510L	#5 BENT BAR (LEVEL II, DUAL COATED)	58
9	CT-511L	#5 BENT BAR (LEVEL II, DUAL COATED)	97
10	CT-517L	#5 BENT BAR (LEVEL II, DUAL COATED)	2
11	CT-518L	#5 BENT BAR (LEVEL II, DUAL COATED)	4
12	CT-519L	#5 BENT BAR (LEVEL II, DUAL COATED)	2
13	CT-520L	#5 BENT BAR (LEVEL II, DUAL COATED)	2
14	CT-521L	#5 BENT BAR (LEVEL II, DUAL COATED)	2
15	CT-522L	#5 BENT BAR (LEVEL II, DUAL COATED)	2
16	CT-523L	#5 BENT BAR (LEVEL II, DUAL COATED)	12
17	CT-524L	#5 BENT BAR (LEVEL II, DUAL COATED)	7
18	CT-525L	#5 BENT BAR (LEVEL II, DUAL COATED)	20
19	CT-526L	#5 BENT BAR (LEVEL II, DUAL COATED)	18
20	CT-527L	#5 BENT BAR (LEVEL II, DUAL COATED)	3
21	CT-602L	#6 BENT BAR (LEVEL II, DUAL COATED)	22
22	CT-610L	#6 BENT BAR (LEVEL II, DUAL COATED)	16
23			
24			
25		#4 x 8'-1 1/2" (LEVEL II, DUAL COATED)	28
26		#5 x 7'-8 1/2" (LEVEL II, DUAL COATED)	244
27		#5 x 7'-9" (LEVEL II, DUAL COATED)	12
28		#5 x 7'-10" (LEVEL II, DUAL COATED)	8
29		#5 x 7'-11" (LEVEL II, DUAL COATED)	8
30		#5 x 8'-0" (LEVEL II, DUAL COATED)	8
31		#6 x 66'-9" (W/ (1) 2'-2" STAGGERED LAP) (40' + 28'-11") (LVL. II, DUAL COATED)	22
32		#5 x 66'-9" (W/ (1) 2'-2" STAGGERED LAP) (40' + 28'-11") (LVL. II, DUAL COATED)	3
33			
34		2"ø I.D. PVC SLEEVE	4
35		SET OF (4) 1/2"ø x 270 KSI STRAND LIFTING LOOPS	4
36		GUARD RAIL ANCHOR PLATE (GALV.) (SUPPLIED BY OTHERS)	8
37	MK-CT6	DAYTON B-16 1/2"ø x 3" LONG COIL LOOP INSERTS (ELECTROPLATED GALV.)	17
38			
39			

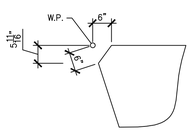

A NB4 ACUTE CORNER BLOCKOUT DETAIL (FOR FLANGE) 1/2" = 1'-0"

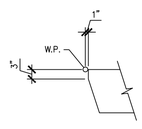

B NB4 ACUTE CORNER BLOCKOUT DETAIL (FOR STEM) 1/2" = 1'-0"

APPROVAL STAMP:

J.P. CARRARA & SONS INC.
Precast & Prestress Manufacturer
2464 CASE STR., MIDDLEBURY, VERMONT 05753 Phone:(802)388-6361 Fax:(802)388-9010

SHULTZ CONSTRUCTION
CONTRACTOR
BALLSTON SPA, NY

STATE OF VERMONT AGENCY OF TRANSPORTATION
COUNTY OF RUTLAND

TOWN OF CASTLETON
VT ROUTE 30 (RURAL MINOR ARTERIAL)
BRIDGE NO.: 93 PROJECT NO.: BRF 015-2(10)

PRESTRESSED NEXT BEAM DETAILS "CT-NB3"

DATE: APR. 17, 2015
SCALE: NOTED
CHKD: R.M. DFTM: PSS
JOB NO: 23456-015
DWG. NO: NB4

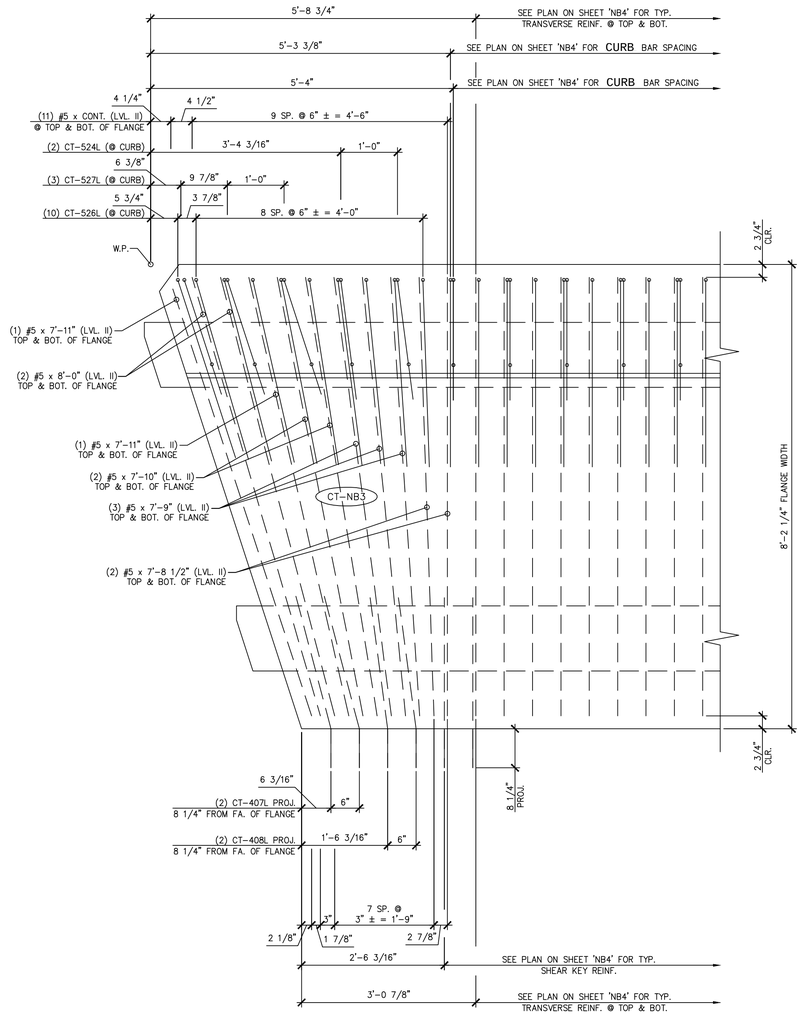

A NB4.1 BEAM END TRANSVERSE/SHEAR KEY/CURB REINFORCING

3/4" = 1'-0"

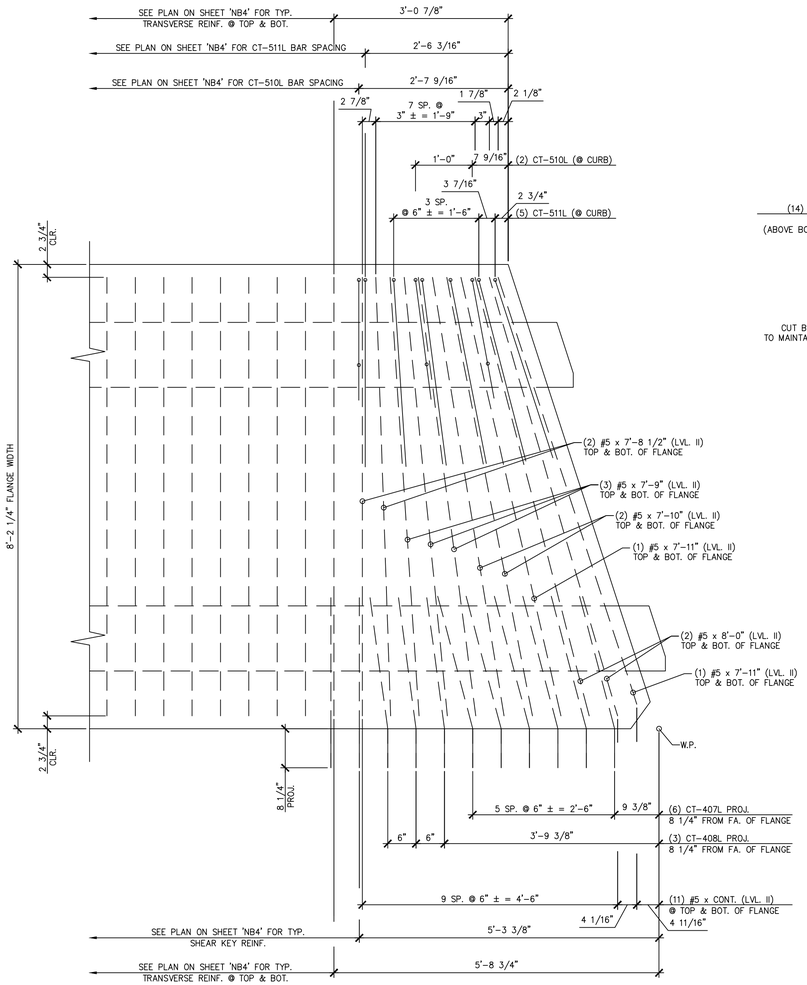

B NB4.1 BEAM END TRANSVERSE/SHEAR KEY/CURB REINFORCING

3/4" = 1'-0"

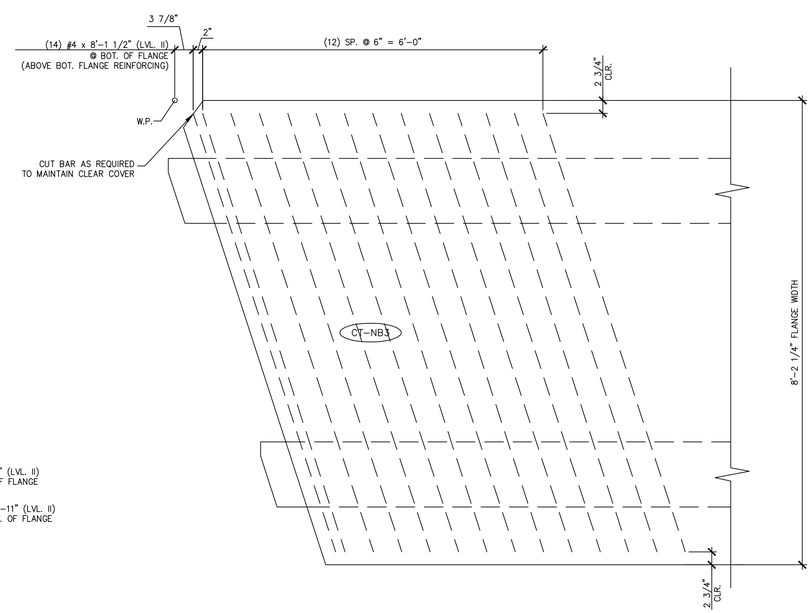

C NB4.1 ADDITIONAL TRANSVERSE REINFORCING AT BOTTOM OF FLANGE

3/4" = 1'-0"

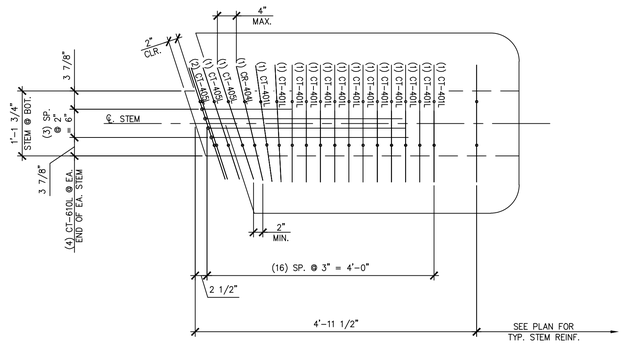

D NB4.1 BEAM END STEM REINFORCING

3/4" = 1'-0"

APPROVAL STAMP:

J.P. CARRARA & SONS INC.
Precast & Prestress Manufacturer
2464 CASE STR., MIDDLEBURY, VERMONT 05753 Phone:(802)388-6361 Fax:(802)388-9010

SHULTZ CONSTRUCTION
CONTRACTOR
BALLSTON SPA, NY

STATE OF VERMONT AGENCY OF TRANSPORTATION
COUNTY OF RUTLAND

TOWN OF CASTLETON
VT ROUTE 30 (RURAL MINOR ARTERIAL)
BRIDGE NO.: 93 PROJECT NO.: BRF 015-2(10)

PRESTRESSED NEXT BEAM DETAILS "CT-NB3"

DATE: APR. 17, 2015
SCALE: NOTED
CHKD: R.M. DFTM: PSS
JOB NO: 23456-015
DWG. NO: NB4.1

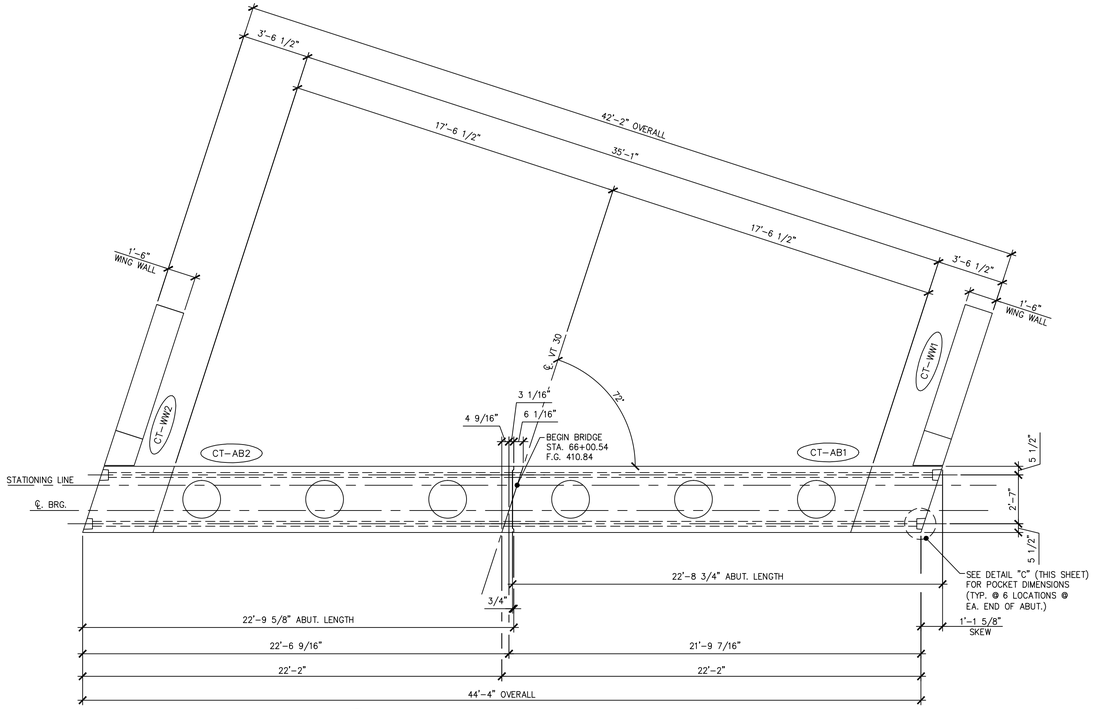

1 / AB1 ABUTMENT #1 ASSEMBLY PLAN

1/4" = 1'-0"

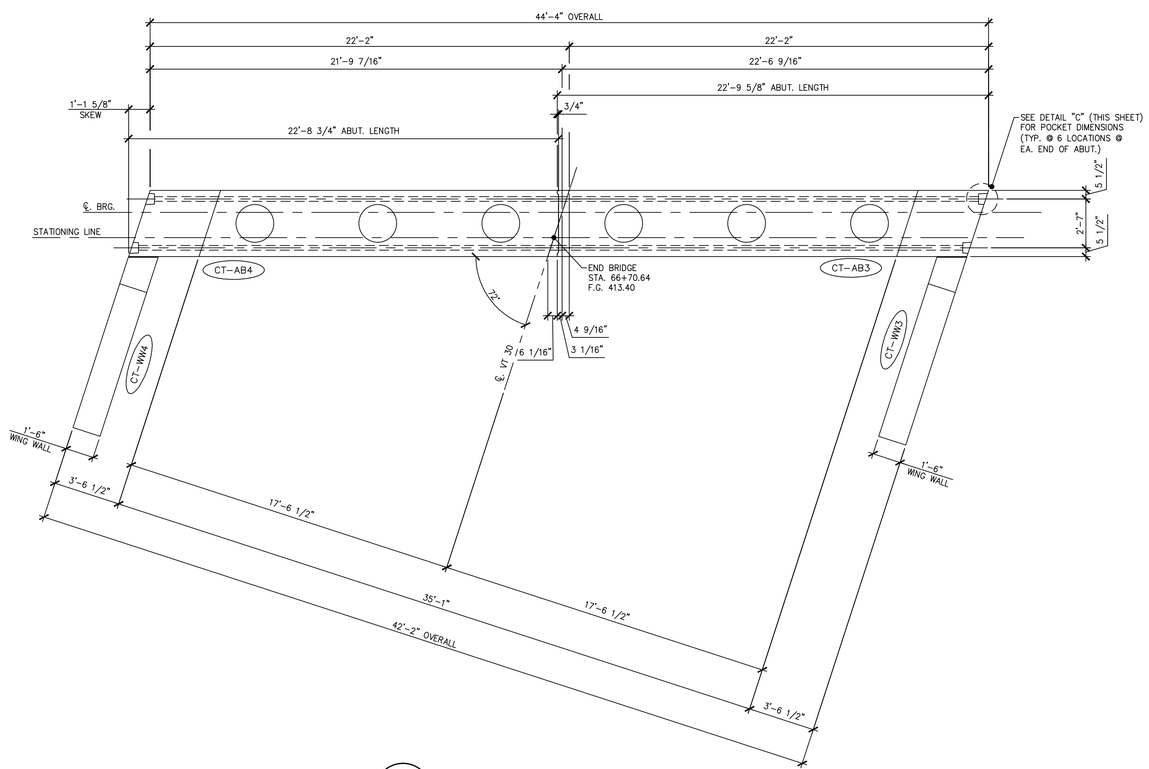

2 / AB1 ABUTMENT #2 ASSEMBLY PLAN

1/4" = 1'-0"

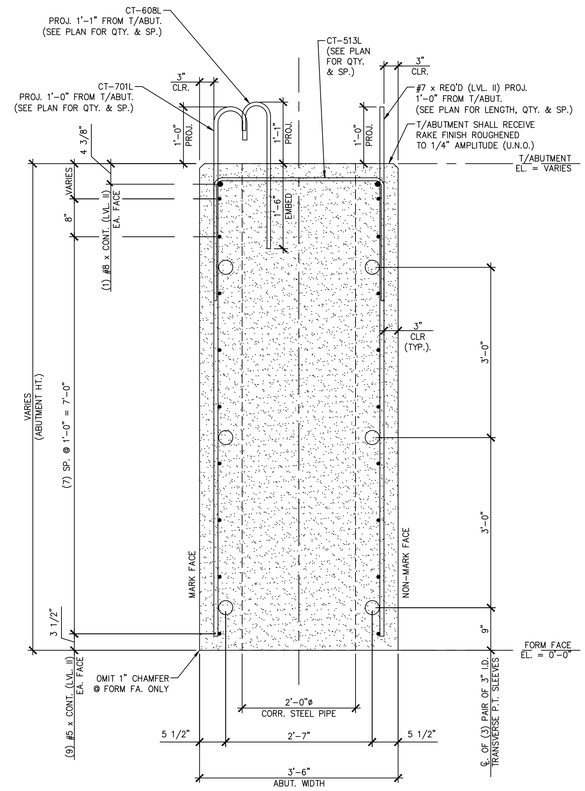

A / AB1 ABUTMENT SECTION

3/4" = 1'-0"

SHOP NOTE:
ALL EDGES OF ABUTMENT SHALL
RECEIVE A 1" CHAMFER (U.N.O.)

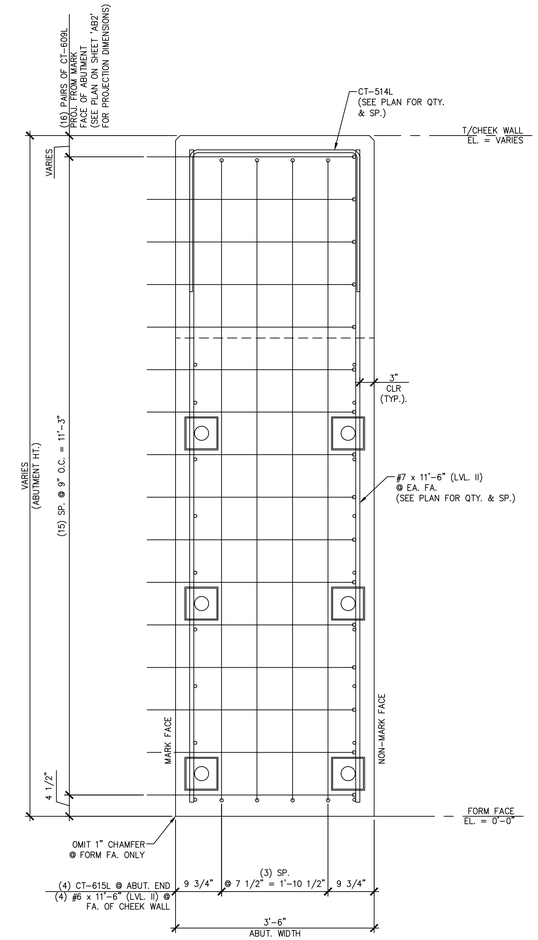

B / AB1 ABUTMENT SECTION

3/4" = 1'-0"

SHOP NOTE:
ALL EDGES OF ABUTMENT SHALL
RECEIVE A 1" CHAMFER (U.N.O.)

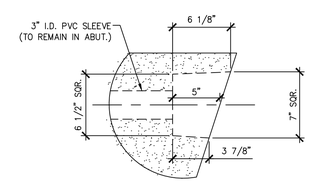

DETAIL – "C"

1 1/2" = 1'-0"

APPROVAL STAMP:

J.P. CARRARA & SONS INC.
Precast & Prestress Manufacturer
2464 CASE STR., MIDDLEBURY, VERMONT 05753 Phone:(802)388-6361 Fax:(802)388-9010

SHULTZ CONSTRUCTION
CONTRACTOR
BALLSTON SPA, NY

STATE OF VERMONT AGENCY OF TRANSPORTATION
COUNTY OF RUTLAND

TOWN OF CASTLETON
VT ROUTE 30 (RURAL MINOR ARTERIAL)
BRIDGE NO.: 93 PROJECT NO.: BRF 015-2(10)

PRECAST ABUTMENT
PLAN, SECTION & DETAILS

DATE:	APR. 17, 2015
SCALE:	NOTED
CHKD: R.M.	DFTM: PSS
JOB NO:	23456-015
DWG. NO:	AB1

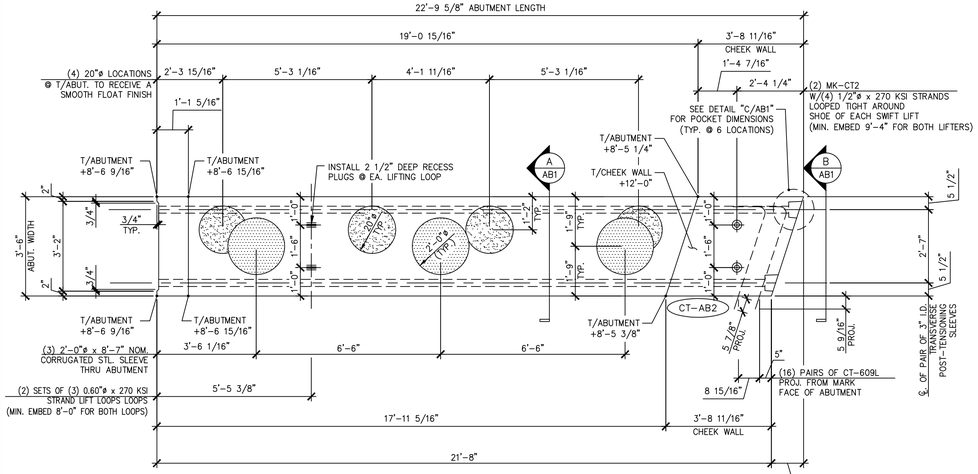

1 AB2 ABUTMENT DIMENSIONAL PLAN VIEW IN FORM

3/8" = 1'-0"

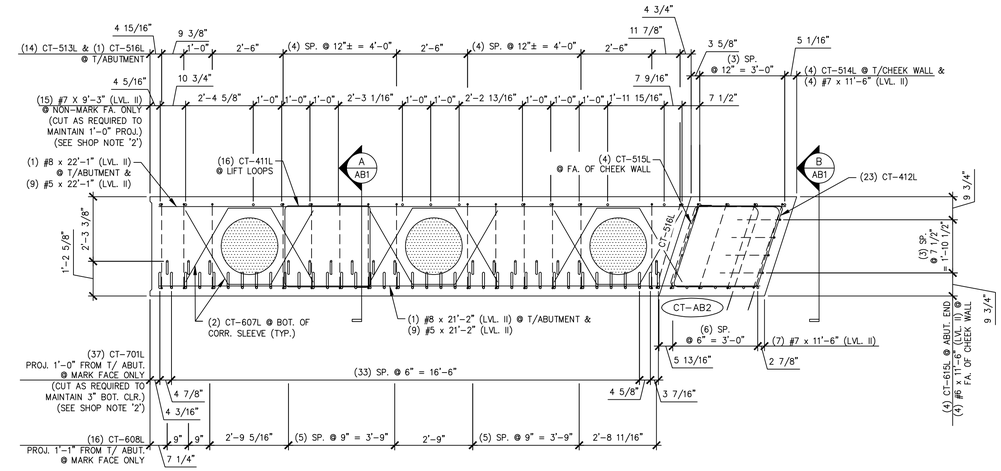

3 AB2 ABUTMENT REINFORCING PLAN VIEW IN FORM

3/8" = 1'-0"

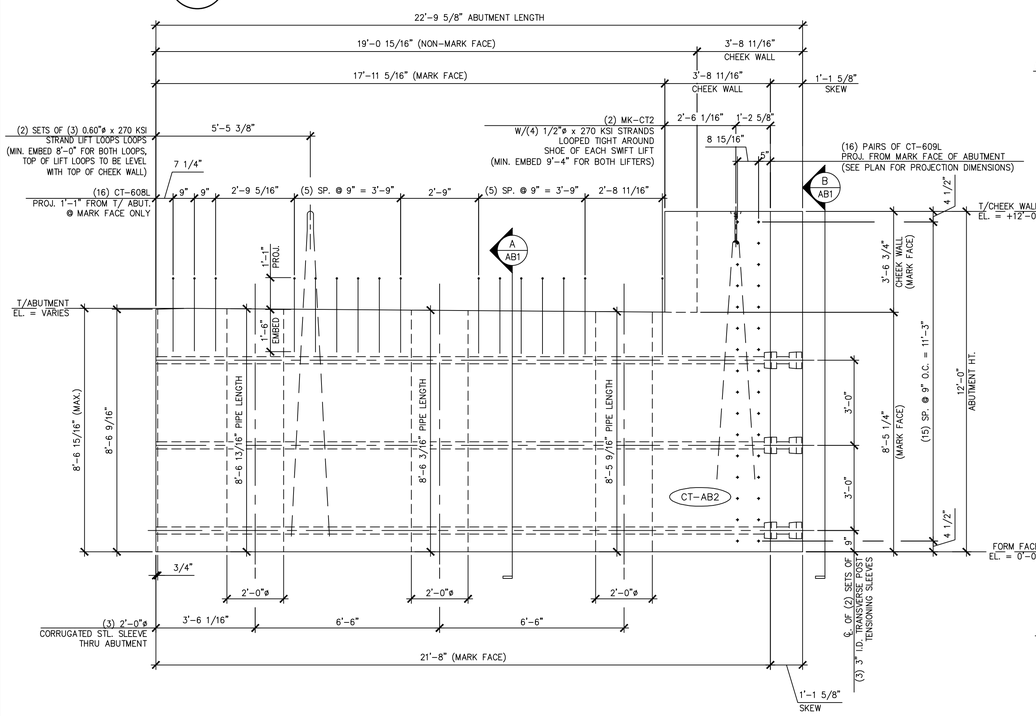

2 AB2 ABUTMENT DIMENSIONAL MARK FACE ELEVATION

3/8" = 1'-0"

(ONLY CT-608L PROJECTING BARS SHOWN.
ALL OTHER PROJECTING BARS ARE NOT SHOWN HERE FOR CLARITY.
SEE DETAILS "A/AB1" AND "4/AB2" FOR ADDITIONAL PROJECTING BARS)

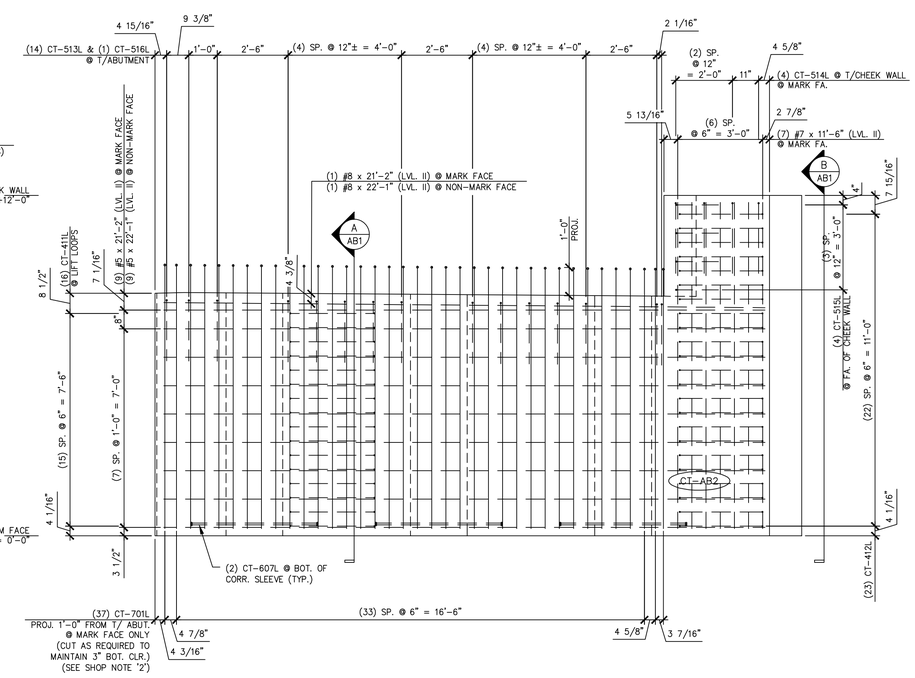

4 AB2 ABUTMENT REINFORCING MARK FACE ELEVATION

3/8" = 1'-0"

(ONLY #7 PROJECTING BARS (LVL. II) SHOWN.
ALL OTHER PROJECTING BARS ARE NOT SHOWN HERE FOR CLARITY.
SEE DETAILS "A/AB1" AND "2/AB2" FOR ADDITIONAL PROJECTING BARS)

SHOP NOTE:
f'c = 5,000 PSI
f'ci = 5,000 PSI
MIX: #445M-NO DCI

SHOP NOTES:
1. ALL EDGES OF ABUTMENT SHALL RECEIVE A 1" CHAMFER (U.N.O.)
2. ENDS OF CUT BARS SHALL BE COATED WITH TOUCH UP PRODUCT SUPPLIED BY THE REBAR MANUFACTURER.

MARK: CT-AB2	QTY.: 1	WT.: 46.94 T	VOL.: 23.18 cy

MATERIAL LIST / ABUTMENT

ITEM	MARK	DESCRIPTION	QTY.
1	CT-701L	#7 BENT BAR (LEVEL II, DUAL COATED)	37
2	CT-607L	#6 BENT BAR (LEVEL II, DUAL COATED)	6
3	CT-608L	#6 BENT BAR (LEVEL II, DUAL COATED)	16
4	CT-609L	#6 BENT BAR (LEVEL II, DUAL COATED)	32
5	CT-615L	#6 BENT BAR (LEVEL II, DUAL COATED)	4
6	CT-513L	#5 BENT BAR (LEVEL II, DUAL COATED)	14
7	CT-514L	#5 BENT BAR (LEVEL II, DUAL COATED)	4
8	CT-515L	#5 BENT BAR (LEVEL II, DUAL COATED)	4
9	CT-516L	#5 BENT BAR (LEVEL II, DUAL COATED)	1
10	CT-411L	#4 BENT BAR (LEVEL II, DUAL COATED)	16
11	CT-412L	#4 BENT BAR (LEVEL II, DUAL COATED)	23
12			
13		#8 x 22'-1" (LEVEL II, DUAL COATED)	1
14		#8 x 21'-2" (LEVEL II, DUAL COATED)	1
15		#7 x 11'-6" (LEVEL II, DUAL COATED)	11
16		#7 x 9'-3" (LEVEL II, DUAL COATED)	15
17		#6 x 11'-6" (LEVEL II, DUAL COATED)	4
18		#5 x 22'-1" (LEVEL II, DUAL COATED)	9
19		#5 x 21'-2" (LEVEL II, DUAL COATED)	9
20		2'-0" ø x 8'-5 9/16" CORRUGATED STEEL PIPE (GALV.)	1
21		2'-0" ø x 8'-6 3/16" CORRUGATED STEEL PIPE (GALV.)	1
22		2'-0" ø x 8'-6 13/16" CORRUGATED STEEL PIPE (GALV.)	1
23			
24	MK-CT2	20T x 19 3/4" SWIFT LIFT LIFTER	2
25		SET OF (3) 0.60"ø STRAND LIFTING LOOPS	2
26		SET OF (4) 1/2"ø STRANDS	2

APPROVAL STAMP:

J.P. CARRARA & SONS INC.
Precast & Prestress Manufacturer
2464 CASE STR., MIDDLEBURY, VERMONT 05753 Phone:(802)388-6361 Fax:(802)388-9010

SHULTZ CONSTRUCTION
CONTRACTOR
BALLSTON SPA, NY

STATE OF VERMONT AGENCY OF TRANSPORTATION
COUNTY OF RUTLAND

TOWN OF CASTLETON
VT ROUTE 30 (RURAL MINOR ARTERIAL)
BRIDGE NO.: 93 PROJECT NO.: BRF 015-2(10)

PRECAST ABUTMENT DETAILS "CT-AB2"

DATE: APR. 17, 2015
SCALE: NOTED
CHKD: R.M. DFTM: PSS
JOB NO: 23456-015
DWG. NO: AB2

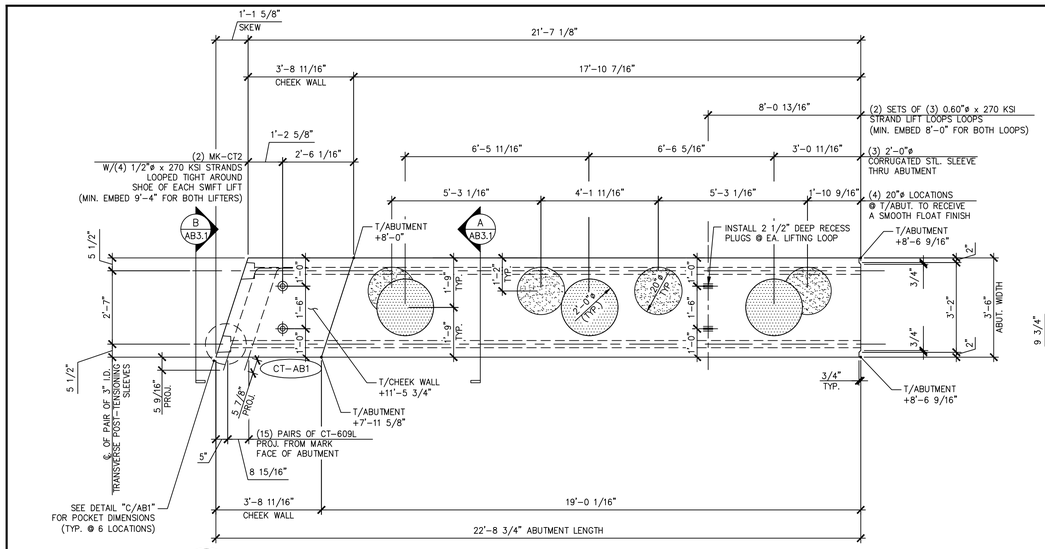

1 AB3 ABUTMENT DIMENSIONAL PLAN VIEW IN FORM

3/8" = 1'-0"

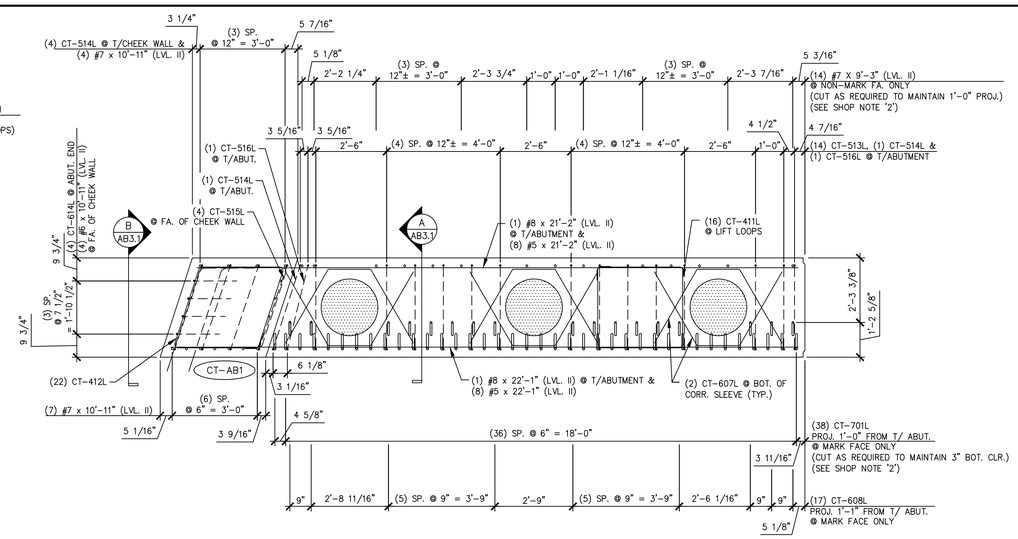

3 AB3 ABUTMENT REINFORCING PLAN VIEW IN FORM

3/8" = 1'-0"

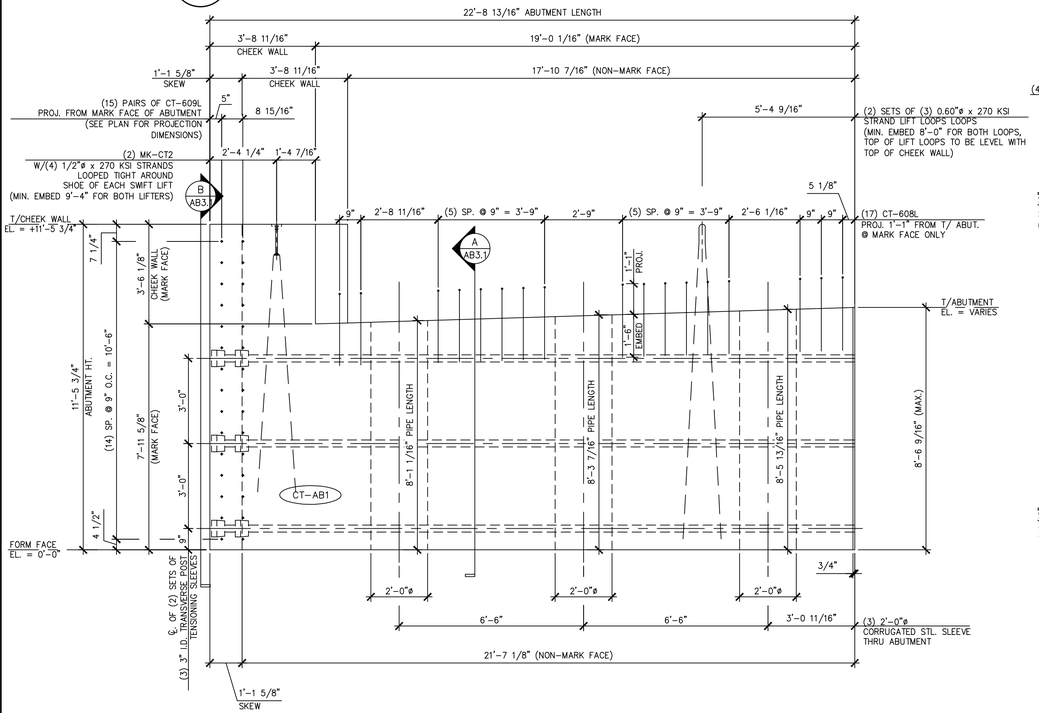

2 AB3 ABUTMENT DIMENSIONAL MARK FACE ELEVATION

3/8" = 1'-0"

(ONLY CT-608L PROJECTING BARS SHOWN.
ALL OTHER PROJECTING BARS ARE NOT SHOWN HERE FOR CLARITY.
SEE DETAILS "A/AB1" AND " " FOR ADDITIONAL PROJECTING BARS)
4/AB3

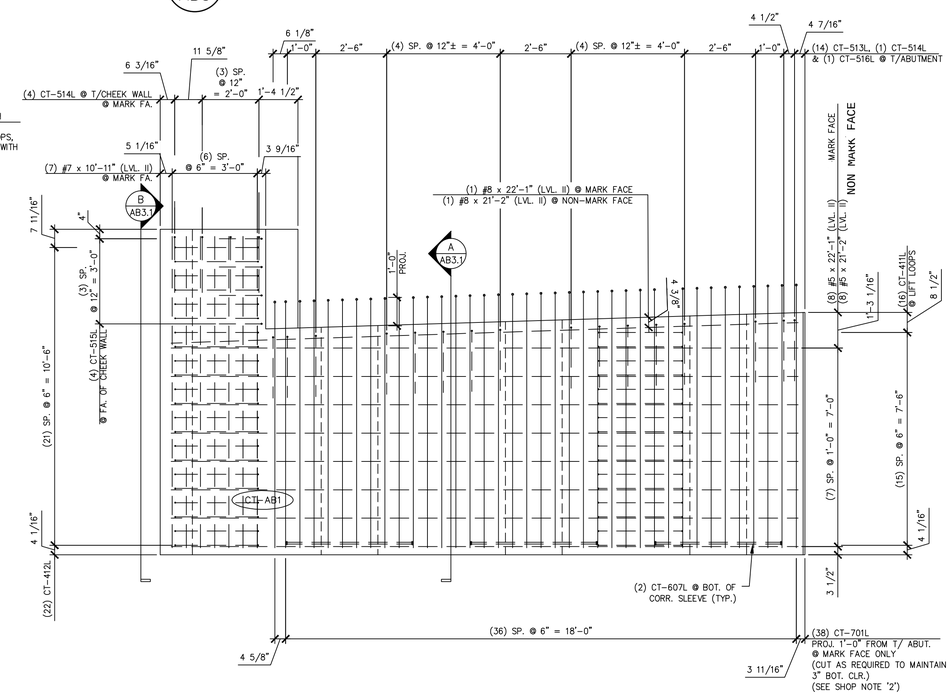

4 AB3 ABUTMENT REINFORCING MARK FACE ELEVATION

3/8" = 1'-0"

(ONLY #7 PROJECTING BARS (LVL. II) SHOWN.
ALL OTHER PROJECTING BARS ARE NOT SHOWN HERE FOR CLARITY.
SEE DETAILS "A/AB1" AND " " FOR ADDITIONAL PROJECTING BARS)
2/AB3

SHOP NOTE:
f'c = 5,000 PSI
f'ci = 5,000 PSI
MIX: #445M-NO DCI

SHOP NOTES:
1. ALL EDGES OF ABUTMENT SHALL RECEIVE A 1" CHAMFER (U.N.O.)
2. ENDS OF CUT BARS SHALL BE COATED WITH TOUCH UP PRODUCT SUPPLIED BY THE REBAR MANUFACTURER.

MARK: CT-AB1	QTY.: 1	WT.: 45.34 T	VOL.: 22.39 cy

MATERIAL LIST / ABUTMENT

ITEM	MARK	DESCRIPTION	QTY.
1	CT-701L	#7 BENT BAR (LEVEL II, DUAL COATED)	38
2	CT-607L	#6 BENT BAR (LEVEL II, DUAL COATED)	6
3	CT-608L	#6 BENT BAR (LEVEL II, DUAL COATED)	17
4	CT-609L	#6 BENT BAR (LEVEL II, DUAL COATED)	30
5	CT-614L	#6 BENT BAR (LEVEL II, DUAL COATED)	4
6	CT-513L	#5 BENT BAR (LEVEL II, DUAL COATED)	14
7	CT-514L	#5 BENT BAR (LEVEL II, DUAL COATED)	5
8	CT-515L	#5 BENT BAR (LEVEL II, DUAL COATED)	4
9	CT-516L	#5 BENT BAR (LEVEL II, DUAL COATED)	1
10	CT-411L	#4 BENT BAR (LEVEL II, DUAL COATED)	16
11	CT-412L	#4 BENT BAR (LEVEL II, DUAL COATED)	22
12		#8 x 22'-1" (LEVEL II, DUAL COATED)	1
13		#8 x 21'-2" (LEVEL II, DUAL COATED)	1
14		#7 x 10'-11" (LEVEL II, DUAL COATED)	11
15		#7 x 9'-3" (LEVEL II, DUAL COATED)	14
16		#6 x 10'-11" (LEVEL II, DUAL COATED)	4
17		#5 x 22'-1" (LEVEL II, DUAL COATED)	8
18		#5 x 21'-2" (LEVEL II, DUAL COATED)	8
19		2'-0" ø x 8'-5 13/16" CORRUGATED STEEL PIPE (GALV.)	1
20		2'-0" ø x 8'-3 7/16" CORRUGATED STEEL PIPE (GALV.)	1
21		2'-0" ø x 8'-1 1/16" CORRUGATED STEEL PIPE (GALV.)	1
22			
23	MK-CT2	20T x 19 3/4" SWIFT LIFT LIFTER	2
24		SET OF (3) 0.60"ø STRAND LIFTING LOOPS	2
25		SET OF (4) 1/2"ø STRANDS	2
26			

APPROVAL STAMP:

J.P. CARRARA & SONS INC.
Precast & Prestress Manufacturer
2464 CASE STR., MIDDLEBURY, VERMONT 05753 Phone:(802)388-6361 Fax:(802)388-9010

SHULTZ CONSTRUCTION
CONTRACTOR
BALLSTON SPA, NY

STATE OF VERMONT AGENCY OF TRANSPORTATION
COUNTY OF RUTLAND

TOWN OF CASTLETON
VT ROUTE 30 (RURAL MINOR ARTERIAL)
BRIDGE NO.: 93 PROJECT NO.: BRF 015-2(10)

PRECAST ABUTMENT DETAILS "CT-AB1"

DATE: APR. 17, 2015
SCALE: NOTED
CHKD: R.M. DFTM: PSS
JOB NO: 23456-015
DWG. NO: AB3

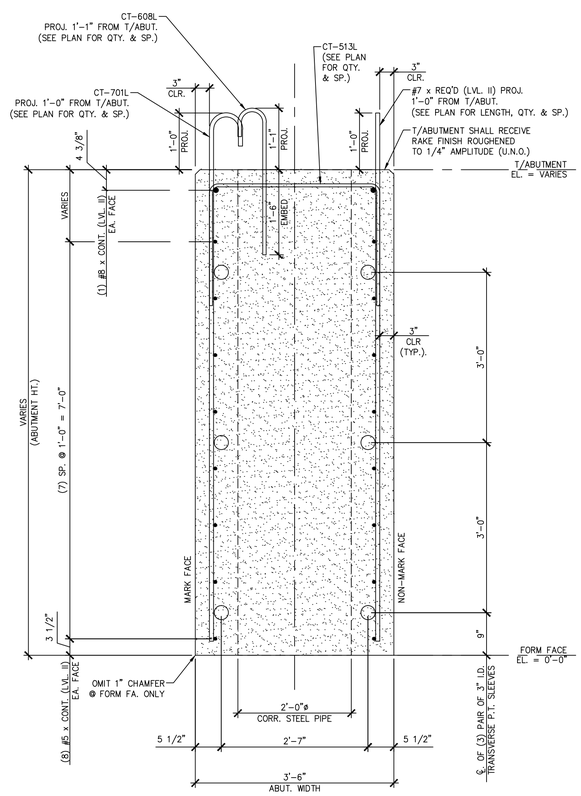

A
AB3.1

ABUTMENT SECTION

3/4" = 1'-0"

SHOP NOTE:
ALL EDGES OF ABUTMENT SHALL
RECEIVE A 1" CHAMFER (U.N.O.)

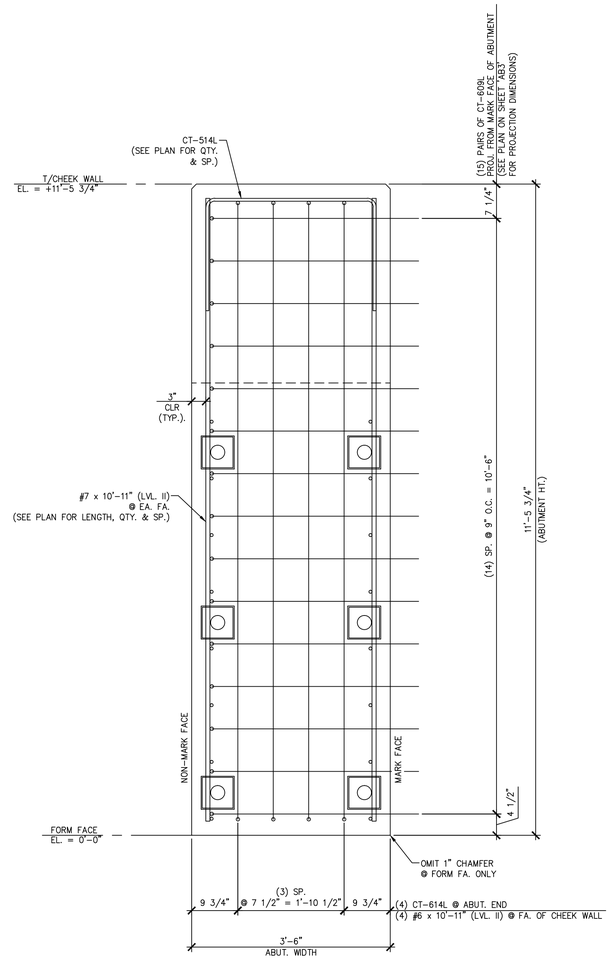

B
AB3.1

ABUTMENT SECTION

3/4" = 1'-0"

SHOP NOTE:
ALL EDGES OF ABUTMENT SHALL
RECEIVE A 1" CHAMFER (U.N.O.)

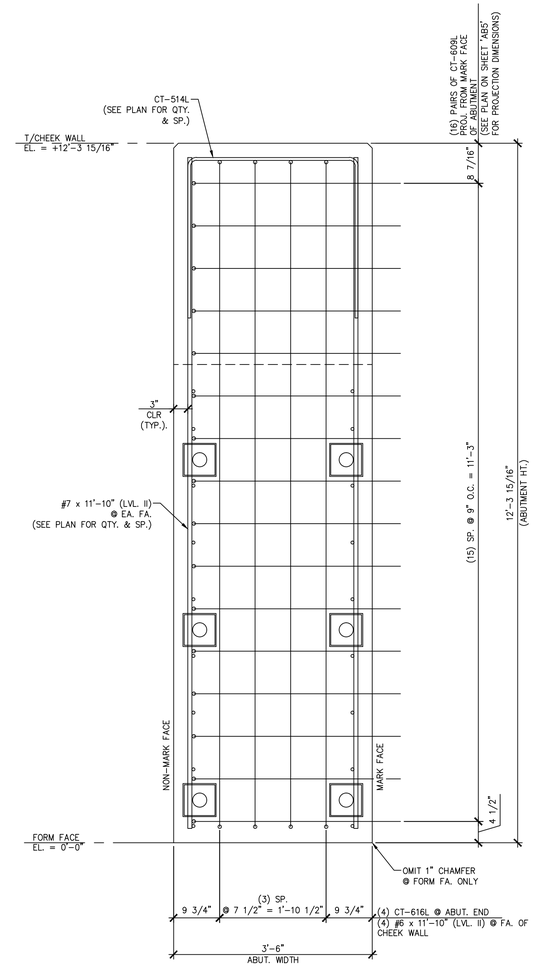

C
AB3.1

ABUTMENT SECTION

3/4" = 1'-0"

SHOP NOTE:
ALL EDGES OF ABUTMENT SHALL
RECEIVE A 1" CHAMFER (U.N.O.)

APPROVAL STAMP:

J.P. CARRARA & SONS INC.
Precast & Prestress Manufacturer
2464 CASE STR., MIDDLEBURY, VERMONT 05753 Phone:(802)388-6361 Fax:(802)388-9010

SHULTZ CONSTRUCTION
CONTRACTOR
BALLSTON SPA, NY

STATE OF VERMONT AGENCY OF TRANSPORTATION
COUNTY OF RUTLAND

DATE: APR. 17, 2015
SCALE: NOTED

TOWN OF CASTLETON
VT ROUTE 30 (RURAL MINOR ARTERIAL)
BRIDGE NO.: 93 PROJECT NO.: BRF 015-2(10)

CHKD: R.M. DFTM: PSS
JOB NO: 23456-015

PRECAST ABUTMENT DETAILS "CT-AB1" & "CT-AB4"

DWG. NO: AB3.1

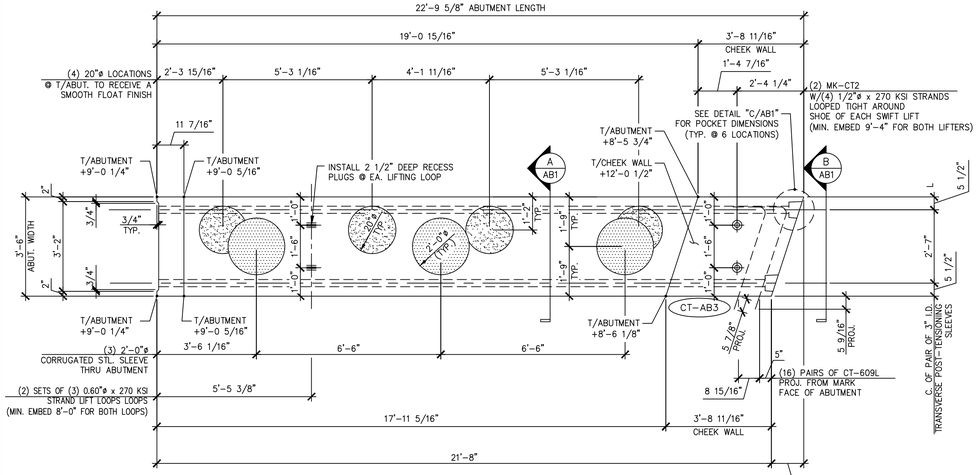

1 AB4 ABUTMENT DIMENSIONAL PLAN VIEW IN FORM

3/8" = 1'-0"

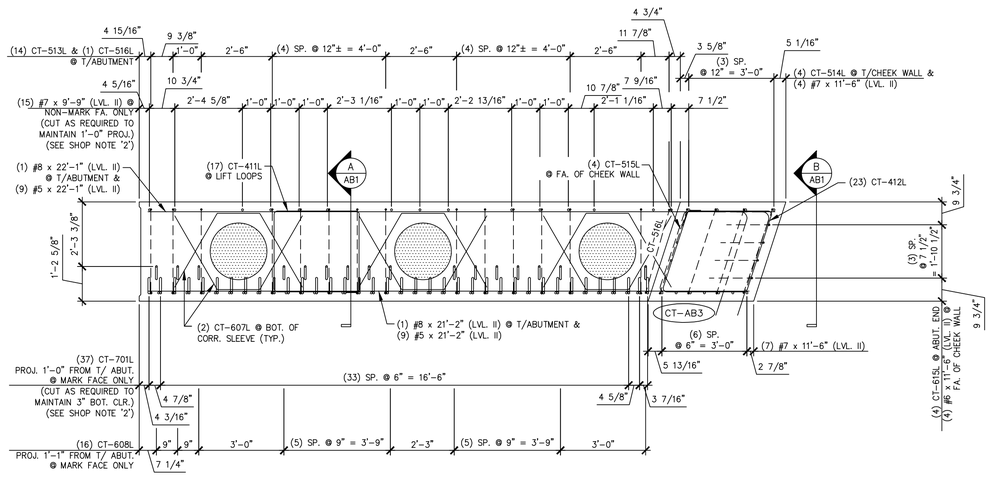

3 AB4 ABUTMENT REINFORCING PLAN VIEW IN FORM

3/8" = 1'-0"

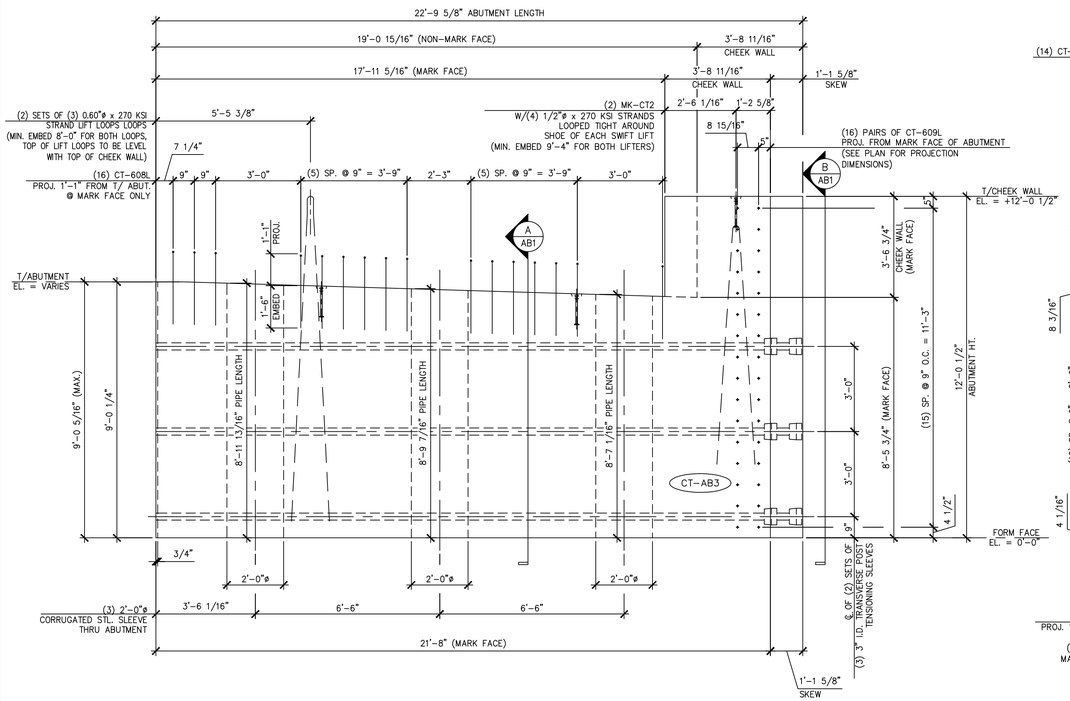

2 AB4 ABUTMENT DIMENSIONAL MARK FACE ELEVATION

3/8" = 1'-0"

(ONLY CT-608L PROJECTING BARS SHOWN.
ALL OTHER PROJECTING BARS ARE NOT SHOWN HERE FOR CLARITY.
SEE DETAILS "A/AB1" AND "4/AB2" FOR ADDITIONAL PROJECTING BARS)

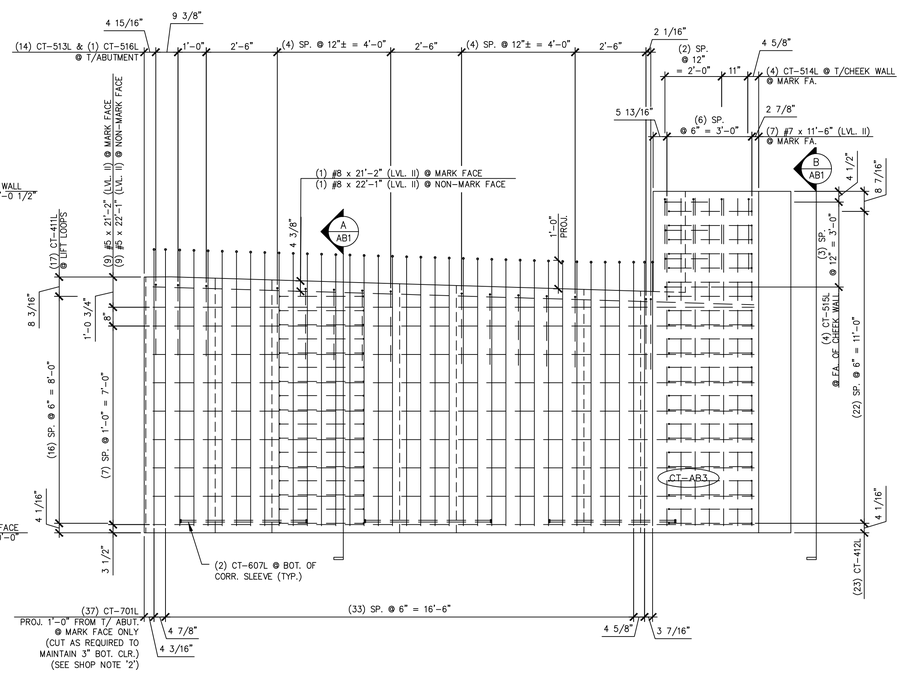

4 AB4 ABUTMENT REINFORCING MARK FACE ELEVATION

3/8" = 1'-0"

(ONLY #7 PROJECTING BARS (LVL. II) SHOWN.
ALL OTHER PROJECTING BARS ARE NOT SHOWN HERE FOR CLARITY.
SEE DETAILS "A/AB1" AND "2/AB2" FOR ADDITIONAL PROJECTING BARS)

SHOP NOTE:
f'c = 5,000 PSI
f'ci = 5,000 PSI
MIX: #445M-NO DCI

SHOP NOTES:
1. ALL EDGES OF ABUTMENT SHALL RECEIVE A 1" CHAMFER (U.N.O.)
2. ENDS OF CUT BARS SHALL BE COATED WITH TOUCH UP PRODUCT SUPPLIED BY THE REBAR MANUFACTURER.

MARK: CT-AB3	QTY.: 1	WT.: 48.10 T	VOL.: 23.75 cy

MATERIAL LIST / ABUTMENT

ITEM	MARK	DESCRIPTION	QTY.
1	CT-701L	#7 BENT BAR (LEVEL II, DUAL COATED)	37
2	CT-607L	#6 BENT BAR (LEVEL II, DUAL COATED)	6
3	CT-608L	#6 BENT BAR (LEVEL II, DUAL COATED)	16
4	CT-609L	#6 BENT BAR (LEVEL II, DUAL COATED)	32
5	CT-615L	#6 BENT BAR (LEVEL II, DUAL COATED)	4
6	CT-513L	#5 BENT BAR (LEVEL II, DUAL COATED)	14
7	CT-514L	#5 BENT BAR (LEVEL II, DUAL COATED)	4
8	CT-515L	#5 BENT BAR (LEVEL II, DUAL COATED)	4
9	CT-516L	#5 BENT BAR (LEVEL II, DUAL COATED)	1
10	CT-411L	#4 BENT BAR (LEVEL II, DUAL COATED)	17
11	CT-412L	#4 BENT BAR (LEVEL II, DUAL COATED)	23
12			
13		#8 x 22'-1" (LEVEL II, DUAL COATED)	1
14		#8 x 21'-2" (LEVEL II, DUAL COATED)	1
15		#7 x 11'-6" (LEVEL II, DUAL COATED)	11
16		#7 x 9'-9" (LEVEL II, DUAL COATED)	15
17		#6 x 11'-6" (LEVEL II, DUAL COATED)	4
18		#5 x 22'-1" (LEVEL II, DUAL COATED)	9
19		#5 x 21'-2" (LEVEL II, DUAL COATED)	9
20		2'-0" ø x 8'-7 1/16" CORRUGATED STEEL PIPE (GALV.)	1
21		2'-0" ø x 8'-9 7/16" CORRUGATED STEEL PIPE (GALV.)	1
22		2'-0" ø x 8'-11 13/16" CORRUGATED STEEL PIPE (GALV.)	1
23	MK-CT2	20T x 19 3/4" SWIFT LIFT LIFTER	2
24		SET OF (3) 0.60"ø STRAND LIFTING LOOPS	2
25		SET OF (4) 1/2"ø STRANDS	2

APPROVAL STAMP:

J.P. CARRARA & SONS INC.
Precast & Prestress Manufacturer
2464 CASE STR., MIDDLEBURY, VERMONT 05753 Phone:(802)388-6361 Fax:(802)388-9010

SHULTZ CONSTRUCTION
CONTRACTOR
BALLSTON SPA, NY

STATE OF VERMONT AGENCY OF TRANSPORTATION
COUNTY OF RUTLAND

TOWN OF CASTLETON
VT ROUTE 30 (RURAL MINOR ARTERIAL)
BRIDGE NO.: 93 PROJECT NO.: BRF 015-2(10)

PRECAST ABUTMENT DETAILS

DATE: APR. 17, 2015
SCALE: NOTED
CHKD: R.M. DFTM: PSS
JOB NO: 23456-015
DWG. NO: AB4

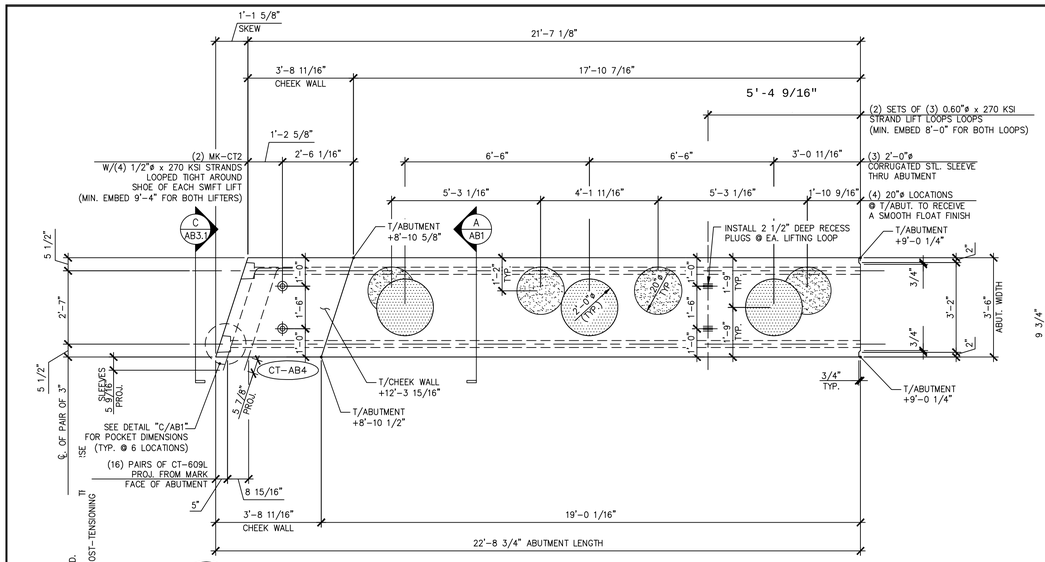

1 AB5 ABUTMENT DIMENSIONAL PLAN VIEW IN FORM

3/8" = 1'-0"

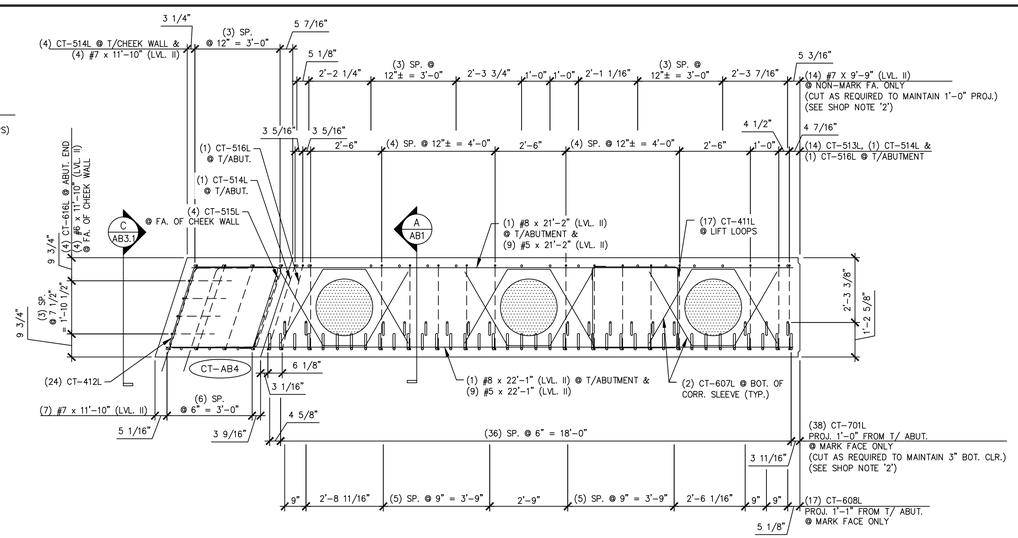

3 AB5 ABUTMENT REINFORCING PLAN VIEW IN FORM

3/8" = 1'-0"

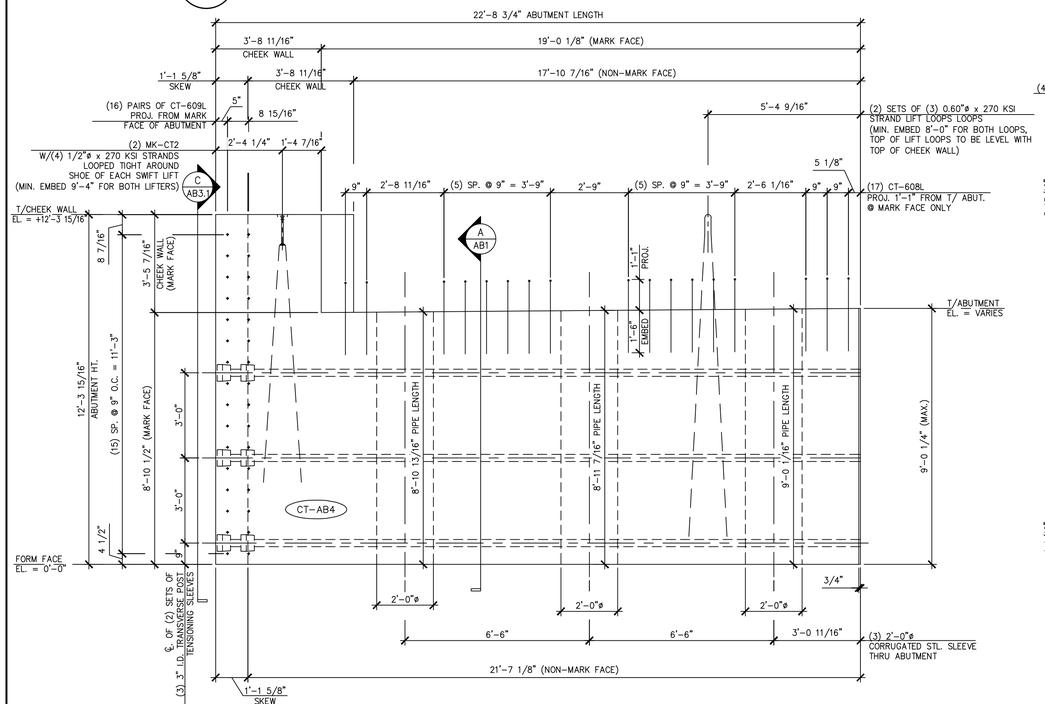

2 AB5 ABUTMENT DIMENSIONAL MARK FACE ELEVATION

3/8" = 1'-0"

(ONLY CT-608L PROJECTING BARS SHOWN.
ALL OTHER PROJECTING BARS ARE NOT SHOWN HERE FOR CLARITY.
SEE DETAILS "A/AB1" AND "4/AB5" FOR ADDITIONAL PROJECTING BARS)

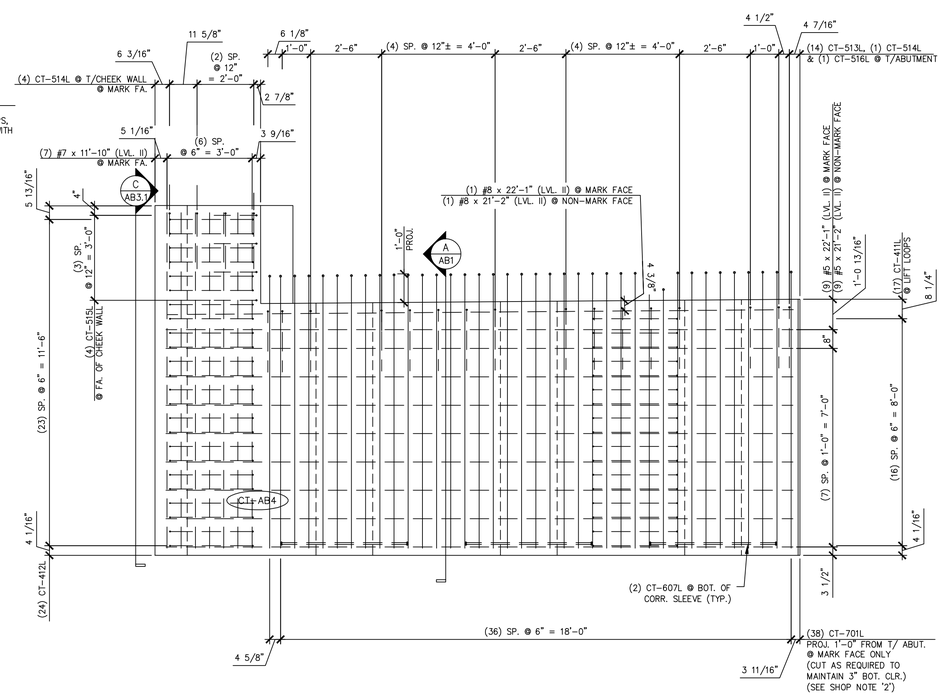

4 AB5 ABUTMENT REINFORCING MARK FACE ELEVATION

3/8" = 1'-0"

(ONLY #7 PROJECTING BARS (LVL. II) SHOWN.
ALL OTHER PROJECTING BARS ARE NOT SHOWN HERE FOR CLARITY.
SEE DETAILS "A/AB1" AND "2/AB2" FOR ADDITIONAL PROJECTING BARS)

SHOP NOTE:
f'c = 5,000 PSI
f'ci = 5,000 PSI
MIX: #445M-NO DCI

SHOP NOTES:
1. ALL EDGES OF ABUTMENT SHALL RECEIVE A 1" CHAMFER (U.N.O.)
2. ENDS OF CUT BARS SHALL BE COATED WITH TOUCH UP PRODUCT SUPPLIED BY THE REBAR MANUFACTURER.

MARK: CT-AB4	QTY.: 1	WT.: 49.05 T	VOL.: 24.22 cy

MATERIAL LIST / ABUTMENT

ITEM	MARK	DESCRIPTION	QTY.
1	CT-701L	#7 BENT BAR (LEVEL II, DUAL COATED)	38
2	CT-607L	#6 BENT BAR (LEVEL II, DUAL COATED)	6
3	CT-608L	#6 BENT BAR (LEVEL II, DUAL COATED)	17
4	CT-609L	#6 BENT BAR (LEVEL II, DUAL COATED)	32
5	CT-616L	#6 BENT BAR (LEVEL II, DUAL COATED)	4
6	CT-513L	#5 BENT BAR (LEVEL II, DUAL COATED)	14
7	CT-514L	#5 BENT BAR (LEVEL II, DUAL COATED)	5
8	CT-515L	#5 BENT BAR (LEVEL II, DUAL COATED)	4
9	CT-516L	#5 BENT BAR (LEVEL II, DUAL COATED)	1
10	CT-411L	#4 BENT BAR (LEVEL II, DUAL COATED)	17
11	CT-412L	#4 BENT BAR (LEVEL II, DUAL COATED)	24
12			
13		#8 x 22'-1" (LEVEL II, DUAL COATED)	1
14		#8 x 21'-2" (LEVEL II, DUAL COATED)	1
15		#7 x 11'-10" (LEVEL II, DUAL COATED)	11
16		#7 x 9'-9" (LEVEL II, DUAL COATED)	14
17		#6 x 11'-10" (LEVEL II, DUAL COATED)	4
18		#5 x 22'-1" (LEVEL II, DUAL COATED)	9
19		#5 x 21'-2" (LEVEL II, DUAL COATED)	9
20		2'-0" ø x 9'-0 1/16" CORRUGATED STEEL PIPE (GALV.)	1
21		2'-0" ø x 8'-11 7/16" CORRUGATED STEEL PIPE (GALV.)	1
22		2'-0" ø x 8'-10 13/16" CORRUGATED STEEL PIPE (GALV.)	1
23	MK-CT2	20T x 19 3/4" SWIFT LIFT LIFTER	2
24		SET OF (3) 0.60"ø STRAND LIFTING LOOPS	2
25		SET OF (4) 1/2"ø STRANDS	2
26			

APPROVAL STAMP:

J.P. CARRARA & SONS INC.
Precast & Prestress Manufacturer
2464 CASE STR., MIDDLEBURY, VERMONT 05753 Phone:(802)388-6361 Fax:(802)388-9010

SHULTZ CONSTRUCTION
CONTRACTOR
BALLSTON SPA, NY

STATE OF VERMONT AGENCY OF TRANSPORTATION
COUNTY OF RUTLAND

TOWN OF CASTLETON
VT ROUTE 30 (RURAL MINOR ARTERIAL)
BRIDGE NO.: 93 PROJECT NO.: BRF 015-2(10)

PRECAST ABUTMENT DETAILS "CT-AB4"

DATE: APR. 17, 2015
SCALE: NOTED
CHKD: R.M. DFTM: PSS
JOB NO: 23456-015
DWG. NO: AB5

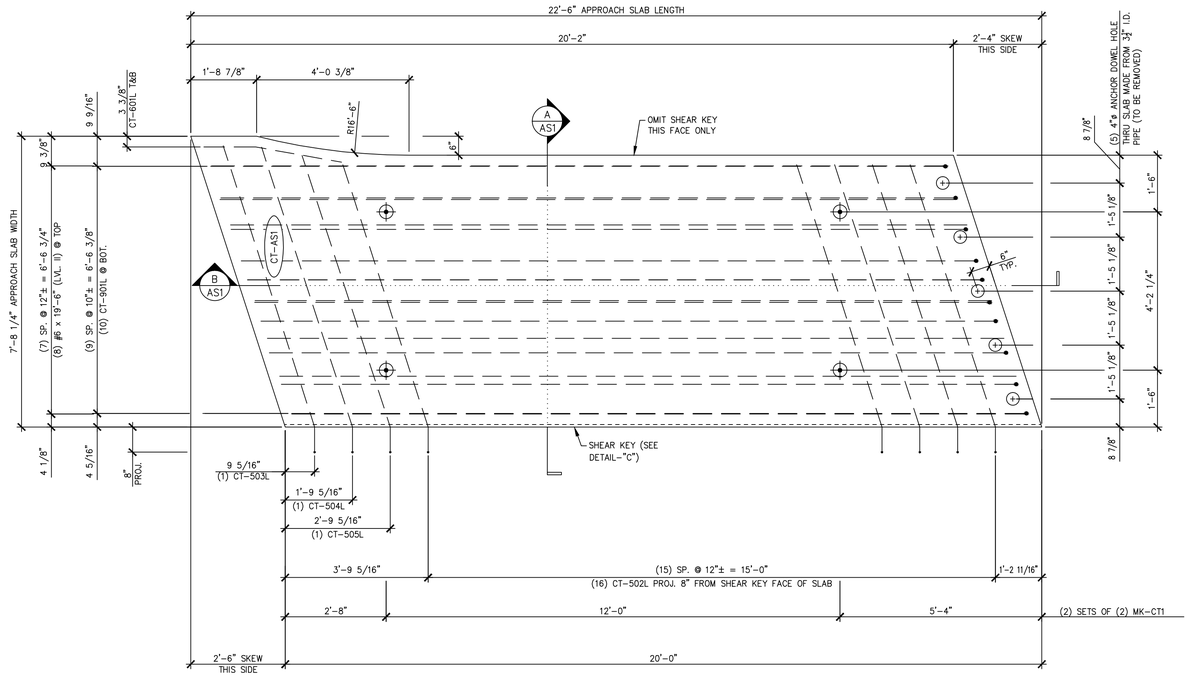

1 / AS1 APPROACH SLAB PLAN VIEW IN FORM

1/2" = 1'-0"

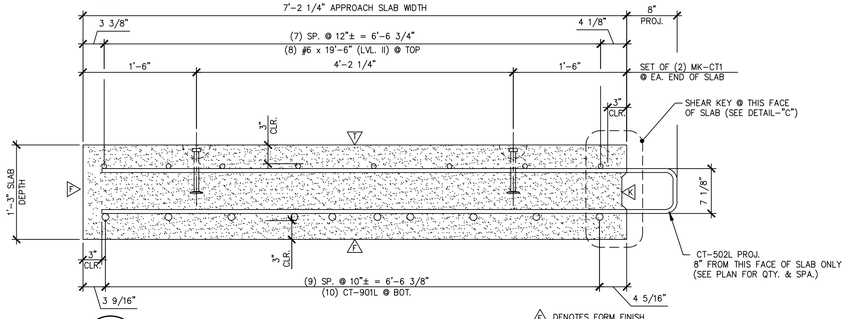

A / AS1 TRANSVERSE SECTION

1" = 1'-0"

△1 DENOTES FORM FINISH

△1 DENOTES FLOAT FINISH

△2 DENOTES ROUGHENED FINISH

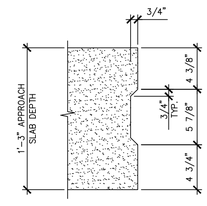

DETAIL – "C"

1 1/2" = 1'-0"

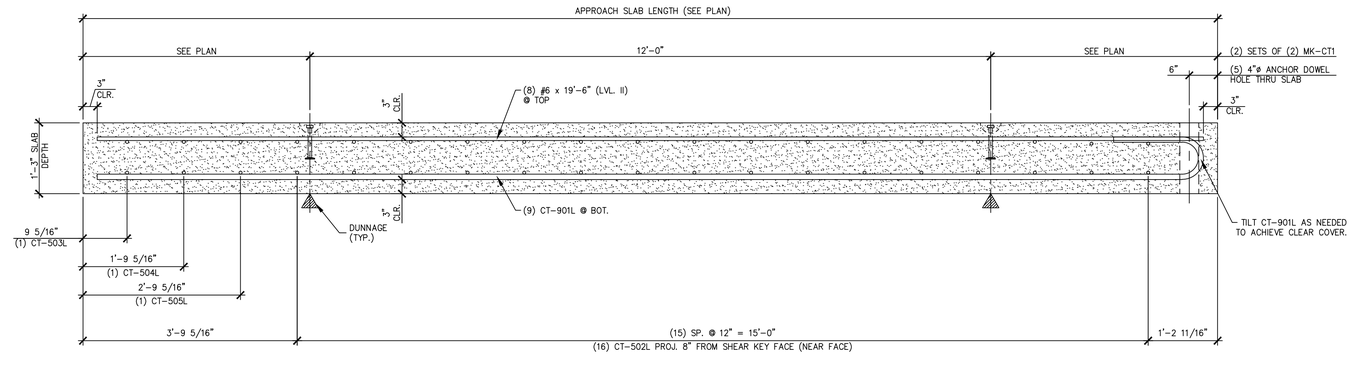

B / AS1 LONGITUDINAL SECTION

3/4" = 1'-0"

SHOP NOTE:
f'c = 4,000 PSI
f'ci = 3,500 PSI
MIX: #445MSCC

MARK: CT-AS1	QTY.: 1	WT.: 13.62 ∓	VOL.: 6.72 cy

MATERIAL LIST / APPROACH SLAB

ITEM	MARK	DESCRIPTION	QTY. CT-AS1
1	CT-502L	#5 BENT BAR (LEVEL II, DUAL COATED)	16
2	CT-503L	#5 BENT BAR (LEVEL II, DUAL COATED)	1
3	CT-504L	#5 BENT BAR (LEVEL II, DUAL COATED)	1
4	CT-505L	#5 BENT BAR (LEVEL II, DUAL COATED)	1
5	CT-601L	#6 BENT BAR (LEVEL II, DUAL COATED)	2
6	CT-901L	#9 BENT BAR (LEVEL II, DUAL COATED)	10
7		#6 x 19'-6" (LEVEL II, DUAL COATED)	8
8	MK-CT1	4T x 7 1/8" SWFT LIFT LIFTER	4
9		4"ø x 1'-3" PVC SLEEVE	5
10			

APPROVAL STAMP:

J.P. CARRARA & SONS INC.
Precast & Prestress Manufacturer
2464 CASE STR., MIDDLEBURY, VERMONT 05753 Phone:(802)388-6361 Fax:(802)388-9010

SHULTZ CONSTRUCTION
CONTRACTOR
BALLSTON SPA, NY

STATE OF VERMONT AGENCY OF TRANSPORTATION
COUNTY OF RUTLAND

DATE: APR. 16, 2015
SCALE: NOTED

TOWN OF CASTLETON
VT ROUTE 30 (RURAL MINOR ARTERIAL)
BRIDGE NO.: 93 PROJECT NO.: BRF 015-2(10)

CHKD: R.M. DFTM: PSS
JOB NO: 23456-015

PRECAST APPROACH SLAB DETAILS "CT-AS1"

DWG. NO: AS1

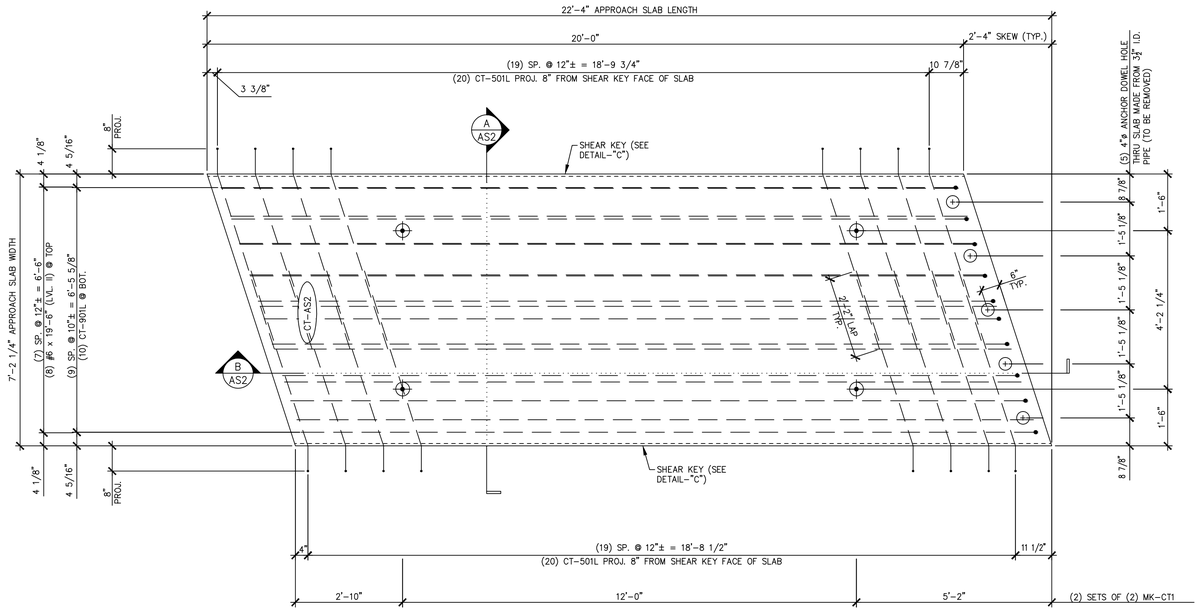

1 / AS2 APPROACH SLAB PLAN VIEW IN FORM

1/2" = 1'-0"

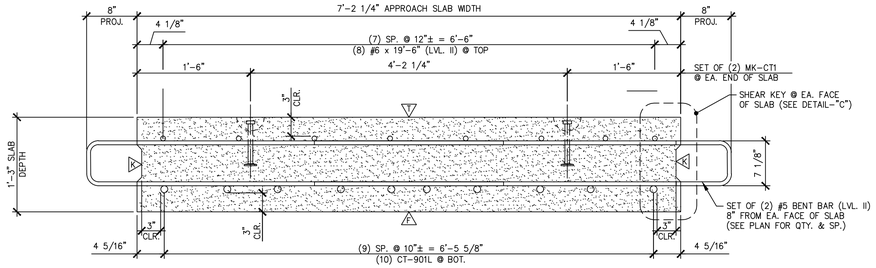

A / AS2 TRANSVERSE SECTION

1" = 1'-0"

△1 DENOTES FORM FINISH

△2 DENOTES FLOAT FINISH

△3 DENOTES ROUGHENED FINISH

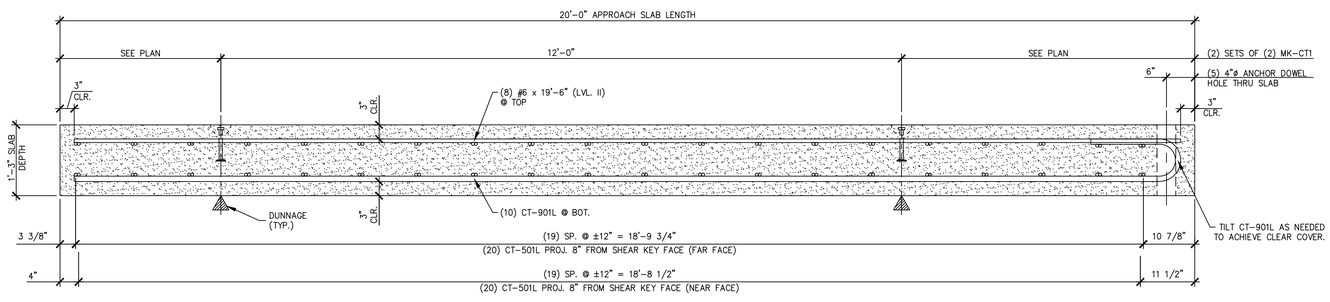

B / AS2 LONGITUDINAL SECTION

3/4" = 1'-0"

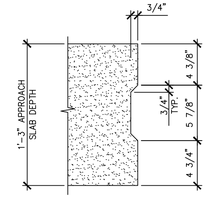

DETAIL – "C"

1 1/2" = 1'-0"

SHOP NOTE:
f'c = 4,000 PSI
f'ci = 3,500 PSI
MIX: #445MSCC

MARK: CT-AS2	QTY.: 2	WT.: 13.48 T	VOL.: 6.65 cy

MATERIAL LIST / APPROACH SLAB

ITEM	MARK	DESCRIPTION	QTY. CT-AS2
1	CT-501L	#5 BENT BAR (LEVEL II, DUAL COATED)	40
2			
3			
4	CT-901L	#9 BENT BAR (LEVEL II, DUAL COATED)	10
5		#6 x 19'-6" (LEVEL II, DUAL COATED)	8
6			
7			
8	MK-CT1	4T x 7 1/8" SWIFT LIFT LIFTER	4
9		4" O.D. x 1'-3" PVC SLEEVE	5
10			

APPROVAL STAMP:

J.P. CARRARA & SONS INC.
Precast & Prestress Manufacturer
2464 CASE STR., MIDDLEBURY, VERMONT 05753 Phone:(802)388-6361 Fax:(802)388-9010

SHULTZ CONSTRUCTION
CONTRACTOR
BALLSTON SPA, NY

STATE OF VERMONT AGENCY OF TRANSPORTATION
COUNTY OF RUTLAND

TOWN OF CASTLETON
VT ROUTE 30 (RURAL MINOR ARTERIAL)
BRIDGE NO.: 93 PROJECT NO.: BRF 015-2(10)

PRECAST APPROACH SLAB DETAILS "CT-AS2"

DATE: APR. 16, 2015
SCALE: NOTED
CHKD: R.M. DFTM: PSS
JOB NO: 23456-015
DWG. NO: AS2

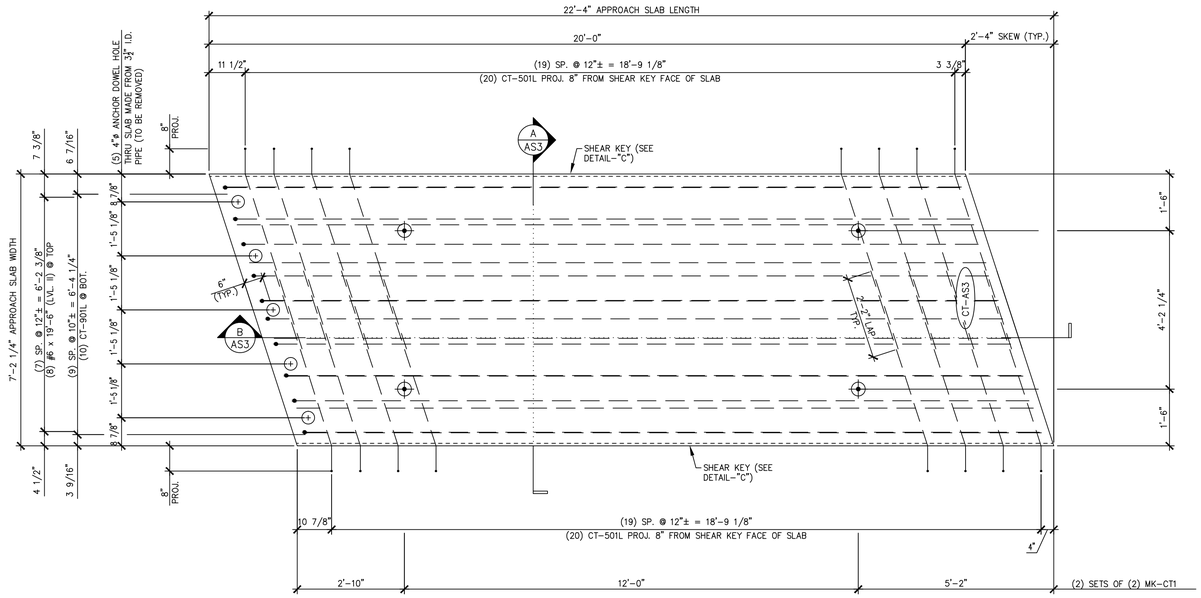

1 / AS3 APPROACH SLAB PLAN VIEW IN FORM

1/2" = 1'-0"

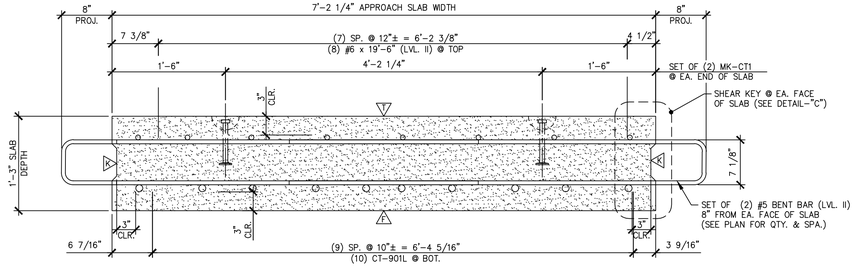

A / AS3 TRANSVERSE SECTION

1" = 1'-0"

△1 DENOTES FORM FINISH

△2 DENOTES FLOAT FINISH

△3 DENOTES ROUGHENED FINISH

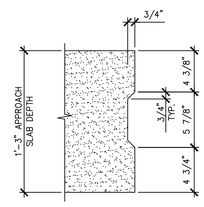

DETAIL – "C"

1 1/2" = 1'-0"

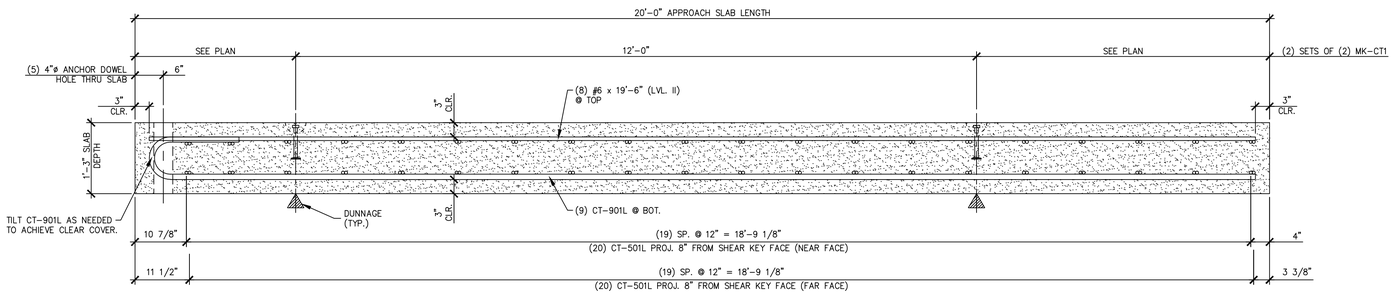

B / AS3 LONGITUDINAL SECTION

3/4" = 1'-0"

SHOP NOTE:
f'c = 4,000 PSI
f'ci = 3,500 PSI
MIX: #445MSCC

MARK: CT-AS3	QTY.: 2	WT.: 13.48 T	VOL.: 6.65 cy

MATERIAL LIST / APPROACH SLAB

ITEM	MARK	DESCRIPTION	QTY./SLAB CT-AS3
1	CT-501L	#5 BENT BAR (LEVEL II, DUAL COATED)	40
2			
3			
4	CT-901L	#9 BENT BAR (LEVEL II, DUAL COATED)	10
5		#6 x 19'-6" (LEVEL II, DUAL COATED)	8
6			
7			
8	MK-CT1	4T x 7 1/8" SWFT LIFT LIFTER	4
9		4" O.D. x 1'-3" PVC SLEEVE	5
10			

APPROVAL STAMP:

J.P. CARRARA & SONS INC.
Precast & Prestress Manufacturer
2464 CASE STR., MIDDLEBURY, VERMONT 05753 Phone:(802)388-6361 Fax:(802)388-9010

SHULTZ CONSTRUCTION
CONTRACTOR
BALLSTON SPA, NY

STATE OF VERMONT AGENCY OF TRANSPORTATION
COUNTY OF RUTLAND

TOWN OF CASTLETON
VT ROUTE 30 (RURAL MINOR ARTERIAL)
BRIDGE NO.: 93 PROJECT NO.: BRF 015-2(10)

PRECAST APPROACH SLAB DETAILS "CT-AS3"

DATE: APR. 16, 2015
SCALE: NOTED
CHKD: R.M. DFTM: PSS
JOB NO: 23456-015
DWG. NO: AS3

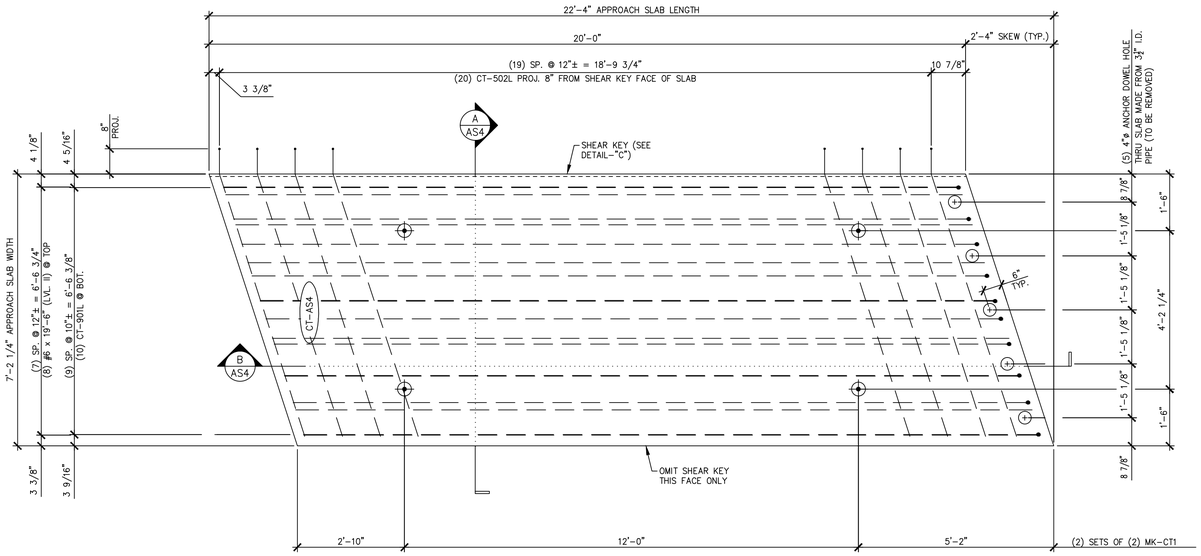

1 / AS4 APPROACH SLAB PLAN VIEW IN FORM

1/2" = 1'-0"

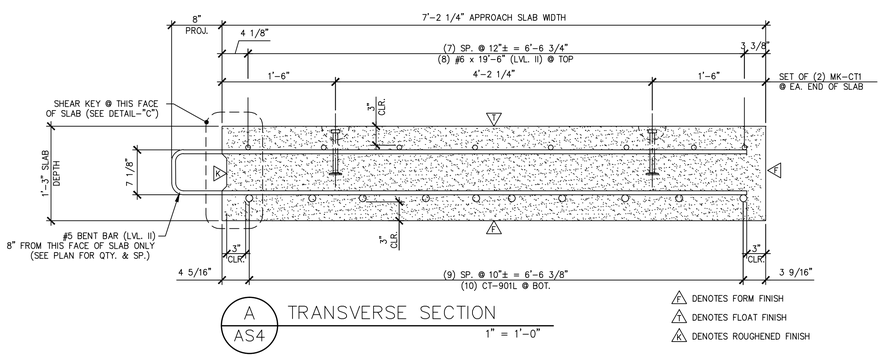

A / AS4 TRANSVERSE SECTION

1" = 1'-0"

△1 DENOTES FORM FINISH

△1 DENOTES FLOAT FINISH

△2 DENOTES ROUGHENED FINISH

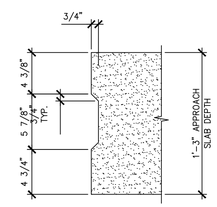

DETAIL – "C"

1 1/2" = 1'-0"

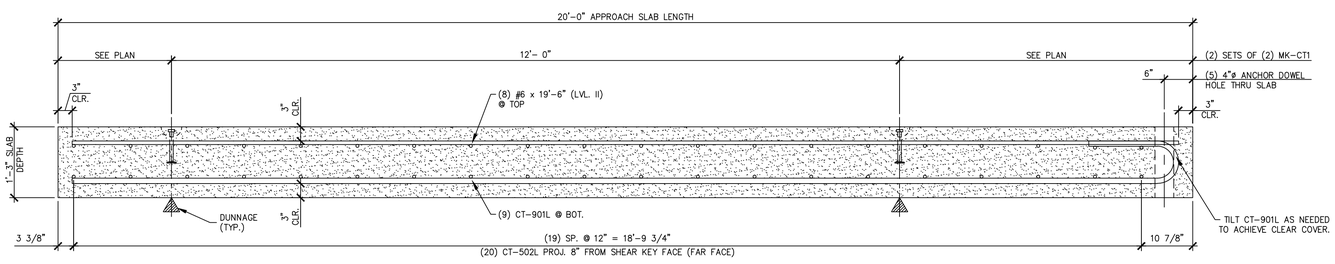

B / AS4 LONGITUDINAL SECTION

3/4" = 1'-0"

SHOP NOTE:
f'c = 4,000 PSI
f'ci = 3,500 PSI
MIX: #445MSCC

MARK: CT-AS4	QTY.: 2	WT.: 13.48 T	VOL.: 6.65 cy

MATERIAL LIST / APPROACH SLAB

ITEM	MARK	DESCRIPTION	QTY. CT-AS4
1	CT-502L	#5 BENT BAR (LEVEL II, DUAL COATED)	20
2			
3			
4	CT-901L	#9 BENT BAR (LEVEL II, DUAL COATED)	10
5		#6 x 19'-6" (LEVEL II, DUAL COATED)	8
6			
7			
8	MK-CT1	4T x 7 1/8" SWFT LIFT LIFTER	4
9		4" O.D. x 1'-3" PVC SLEEVE	5
10			

APPROVAL STAMP:

J.P. CARRARA & SONS INC.
Precast & Prestress Manufacturer
2464 CASE STR., MIDDLEBURY, VERMONT 05753 Phone:(802)388-6361 Fax:(802)388-9010

SHULTZ CONSTRUCTION
CONTRACTOR
BALLSTON SPA, NY

STATE OF VERMONT AGENCY OF TRANSPORTATION
COUNTY OF RUTLAND

TOWN OF CASTLETON
VT ROUTE 30 (RURAL MINOR ARTERIAL)
BRIDGE NO.: 93 PROJECT NO.: BRF 015-2(10)

PRECAST APPROACH SLAB DETAILS "CT-AS4"

DATE: APR. 16, 2015
SCALE: NOTED
CHKD: R.M. DFTM: PSS
JOB NO: 23456-015
DWG. NO: AS4

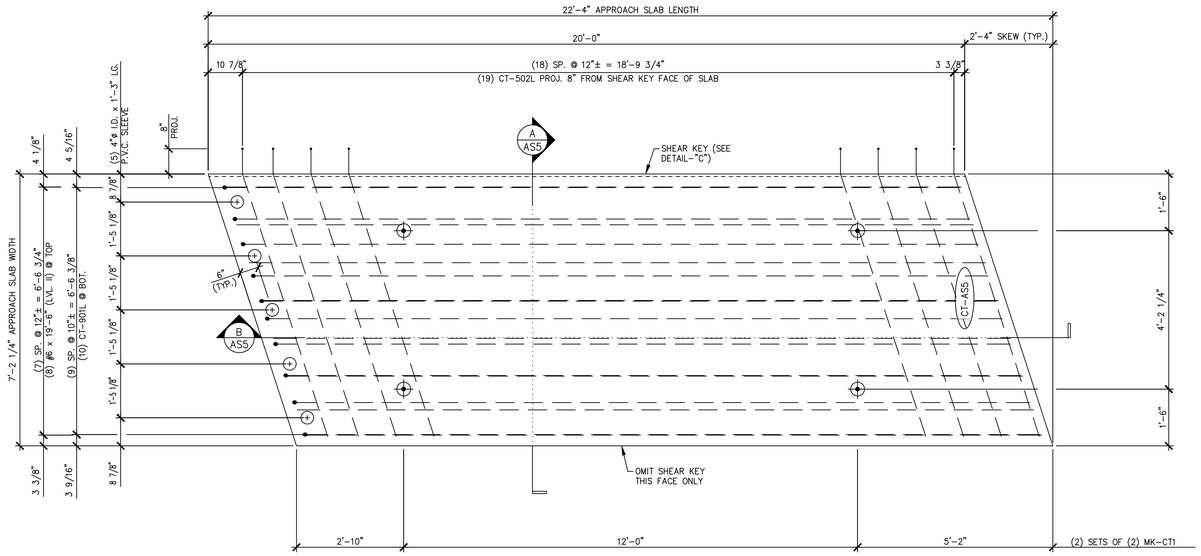

1 / AS5 APPROACH SLAB PLAN VIEW IN FORM

1/2" = 1'-0"

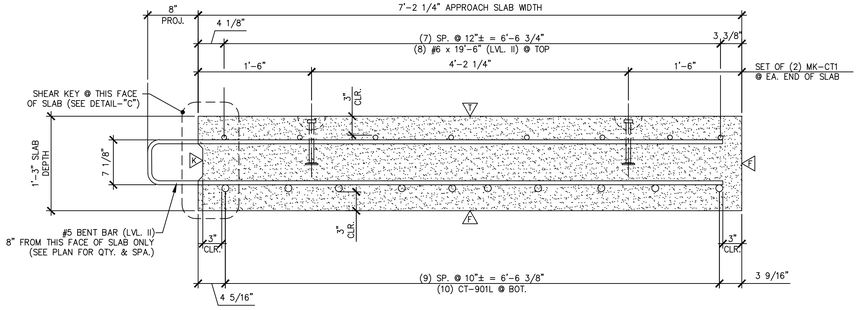

A / AS5 TRANSVERSE SECTION

1" = 1'-0"

△1 DENOTES FORM FINISH

△2 DENOTES FLOAT FINISH

△3 DENOTES ROUGHENED FINISH

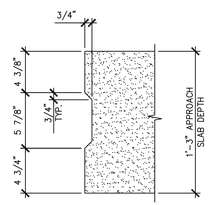

DETAIL – "C"

1 1/2" = 1'-0"

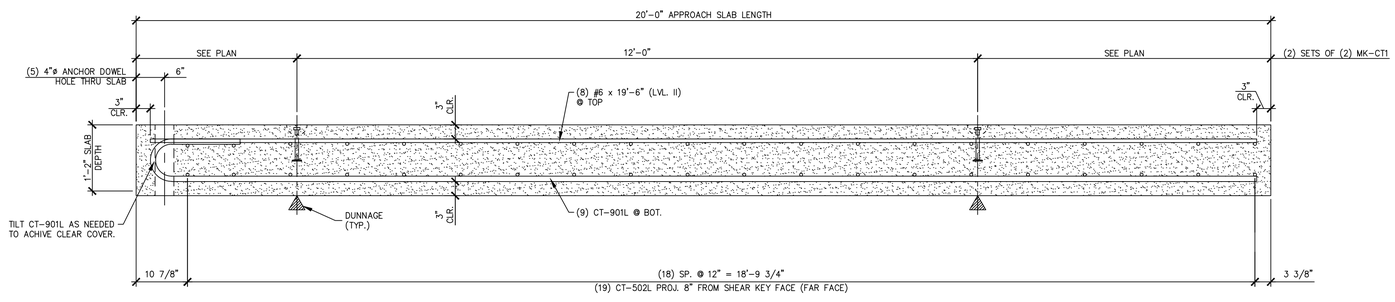

B / AS5 LONGITUDINAL SECTION

3/4" = 1'-0"

SHOP NOTE:
f'c = 4,000 PSI
f'ci = 3,500 PSI
MIX: #445MSCC

MARK: CT-AS5	QTY.: 1	WT.: 13.48 T	VOL.: 6.65 cy

MATERIAL LIST / APPROACH SLAB

ITEM	MARK	DESCRIPTION	QTY. CT-AS5
1	CT-502L	#5 BENT BAR (LEVEL II, DUAL COATED)	19
2			
3			
4	CT-901L	#9 BENT BAR (LEVEL II, DUAL COATED)	10
5		#6 x 19'-6" (LEVEL II, DUAL COATED)	8
6			
7			
8	MK-CT1	4T x 7 1/8" SWFT LIFT LIFTER	4
9		4" O.D. x 1'-3" PVC SLEEVE	5
10			

APPROVAL STAMP:

J.P. CARRARA & SONS INC.
Precast & Prestress Manufacturer
2464 CASE STR., MIDDLEBURY, VERMONT 05753 Phone:(802)388-6361 Fax:(802)388-9010

SHULTZ CONSTRUCTION
CONTRACTOR
BALLSTON SPA, NY

STATE OF VERMONT AGENCY OF TRANSPORTATION
COUNTY OF RUTLAND

TOWN OF CASTLETON
VT ROUTE 30 (RURAL MINOR ARTERIAL)
BRIDGE NO.: 93 PROJECT NO.: BRF 015-2(10)

PRECAST APPROACH SLAB DETAILS

DATE: APR. 16, 2015
SCALE: NOTED
CHKD: R.M. DFTM: PSS
JOB NO: 23456-015
DWG. NO: AS5

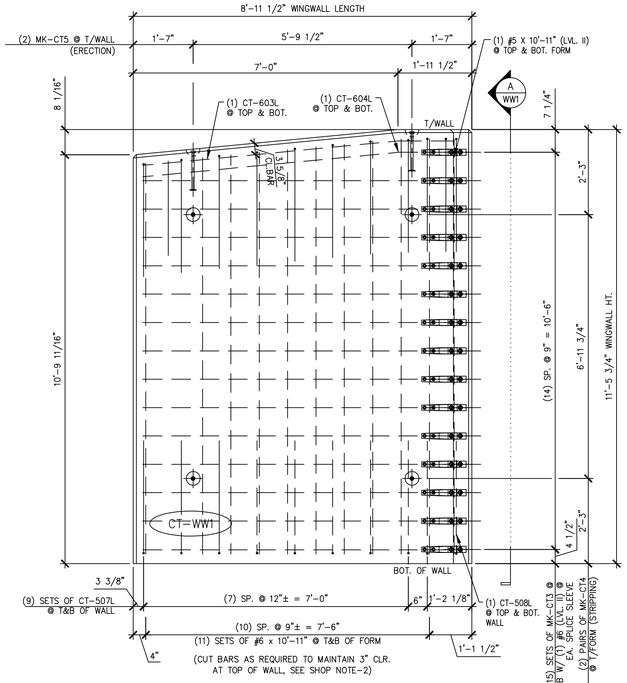

1 WW1 PLAN VIEW IN FORM

1/2" = 1'-0"

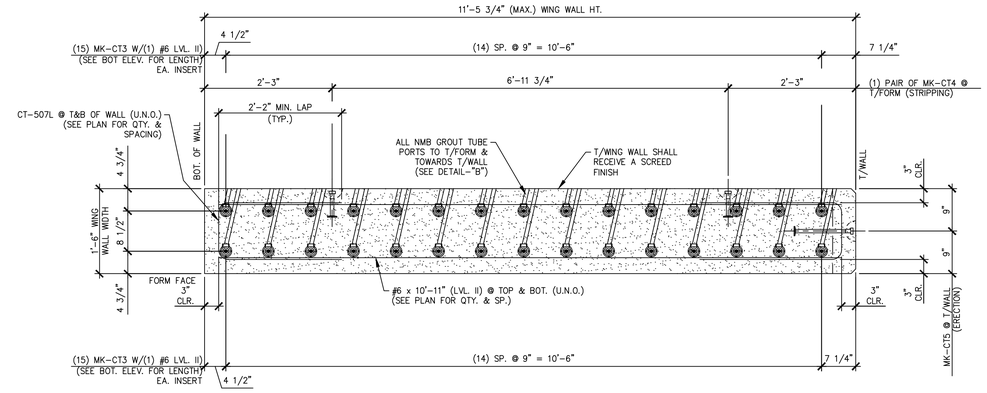

A WW1 WINGWALL ELEVATION

3/4" = 1'-0"

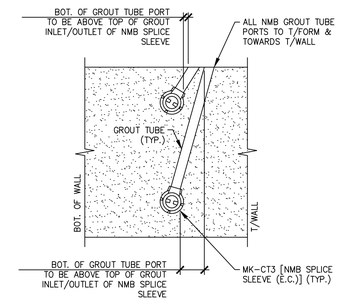

DETAIL – "B"

3/4" = 1'-0"

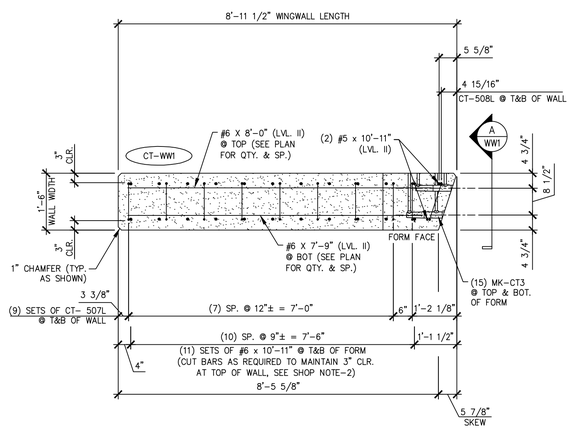

WING WALL BOTTOM ELEVATION

1/2" = 1'-0"

SHOP NOTES:
1. ALL EDGES OF WING WALLS, FORM FACE & T/WALL FACE, SHALL RECEIVE A 1" CHAMFER (UNLESS NOTED OTHERWISE)

2. ENDS OF CUT BARS SHALL BE COATED WITH TOUCH UP PRODUCT SUPPLIED BY THE REBAR MANUFACTURER.

SHOP NOTE:
f'c = 5,000 PSI
f'ci = 3,500 PSI
MIX: #445MSCC

MARK: CT–WW1	QTY.: 1	WT.: 10.98 T	VOL.: 5.42 cy

MATERIAL LIST / WINGWALL

ITEM	MARK	DESCRIPTION	QTY.
1	CT–507L	#5 BENT BAR (LEVEL II, DUAL COATED)	18
2	CT–508L	#5 BENT BAR (LEVEL II, DUAL COATED)	2
3	CT–603L	#6 BENT BAR (LEVEL II, DUAL COATED)	2
4	CT–604L	#6 BENT BAR (LEVEL II, DUAL COATED)	2
5		#5 x 10'–11" (LEVEL II, DUAL COATED)	2
6		#6 x 10'–11" (LEVEL II, DUAL COATED)	22
7		#6 x 8'–0" (LEVEL II, DUAL COATED)	14
8		#6 x 7'–9" (LEVEL II, DUAL COATED)	14
9			
10			
11			
12	MK–CT3	NMB SPLICE SLEEVE 6U–X(PG) (EPOXY COATED)	30
13	MK–CT4	4T x 7 1/8" SWIFT LIFT LIFTER	4
14	MK–CT5	8T x 13 3/8" SWIFT LIFT LIFTER	2
15			

APPROVAL STAMP:

J.P. CARRARA & SONS INC.
Precast & Prestress Manufacturer
2464 CASE STR., MIDDLEBURY, VERMONT 05753 Phone:(802)388–6361 Fax:(802)388–9010

SHULTZ CONSTRUCTION
CONTRACTOR
BALLSTON SPA, NY

STATE OF VERMONT AGENCY OF TRANSPORTATION
COUNTY OF RUTLAND

TOWN OF CASTLETON
VT ROUTE 30 (RURAL MINOR ARTERIAL)
BRIDGE NO.: 93 PROJECT NO.: BRF 015–2(10)

PRECAST WINGWALL DETAILS "CT–WW1"

DATE: APR. 16, 2015
SCALE: NOTED
CHKD: R.M. DFTM: PSS
JOB NO: 23456–015
DWG. NO: WW1

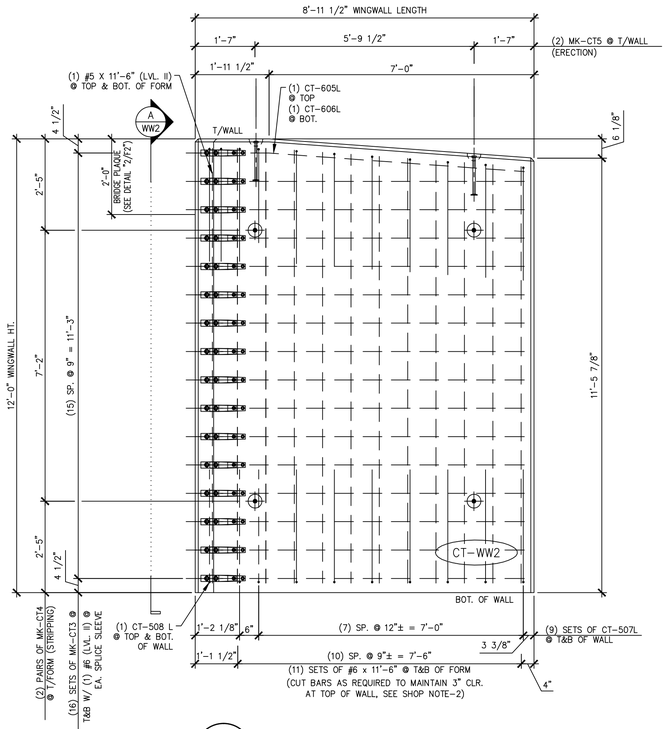

1 / WW2 PLAN VIEW IN FORM

1/2" = 1'-0"

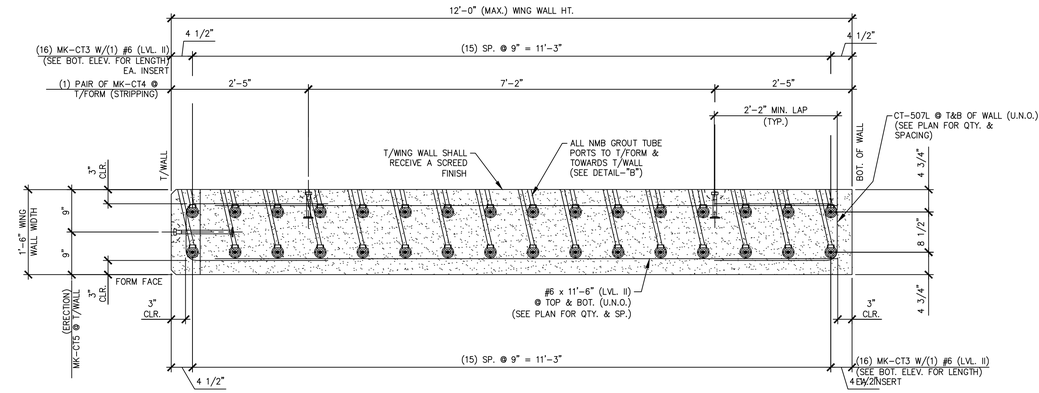

A / WW2 WINGWALL ELEVATION

3/4" = 1'-0"

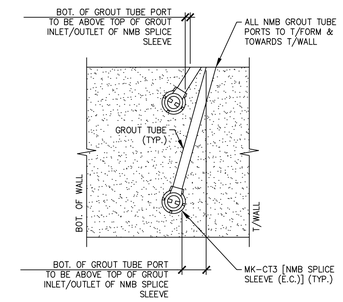

DETAIL - "B"

3/4" = 1'-0"

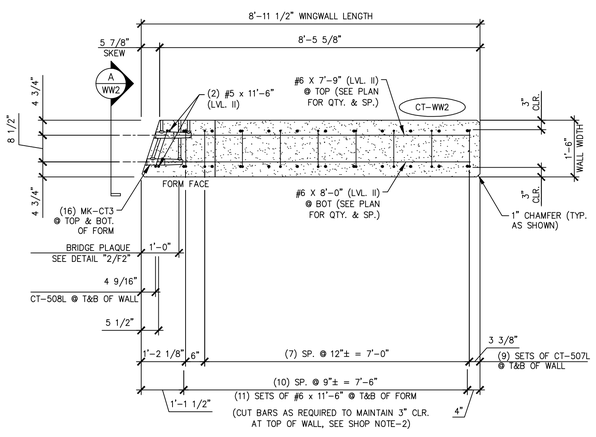

WING WALL BOTTOM ELEVATION

1/2" = 1'-0"

SHOP NOTES:
1. ALL EDGES OF WING WALLS, FORM FACE & T/WALL FACE, SHALL RECEIVE A 1" CHAMFER (UNLESS NOTED OTHERWISE)

2. ENDS OF CUT BARS SHALL BE COATED WITH TOUCH UP PRODUCT SUPPLIED BY THE REBAR MANUFACTURER.

SHOP NOTE:
f'c = 5,000 PSI
f'ci = 3,500 PSI
MIX: #445MSCC

MARK: CT-WW2	QTY.: 1	WT.: 11.56 T	VOL.: 5.71 cy

MATERIAL LIST / WINGWALL

ITEM	MARK	DESCRIPTION	QTY.
1	CT-507L	#5 BENT BAR (LEVEL II, DUAL COATED)	18
2	CT-508L	#5 BENT BAR (LEVEL II, DUAL COATED)	2
3	CT-605L	#6 BENT BAR (LEVEL II, DUAL COATED)	1
4	CT-606L	#6 BENT BAR (LEVEL II, DUAL COATED)	1
5		#5 x 11'-6" (LEVEL II, DUAL COATED)	2
6		#6 x 11'-6" (LEVEL II, DUAL COATED)	22
7		#6 x 8'-0" (LEVEL II, DUAL COATED)	15
8		#6 x 7'-9" (LEVEL II, DUAL COATED)	15
9			
10			
11		BRIDGE PLAQUE (SUPPLIED BY OTHERS)	1
12	MK-CT3	NMB SPLICE SLEEVE 6U-X(PG) (EPOXY COATED)	32
13	MK-CT4	4T x 7 1/8" SWIFT LIFT LIFTER	4
14	MK-CT5	8T x 13 3/8" SWIFT LIFT LIFTER	2
15			

APPROVAL STAMP:

J.P. CARRARA & SONS INC.
Precast & Prestress Manufacturer
2464 CASE STR., MIDDLEBURY, VERMONT 05753 Phone:(802)388-6361 Fax:(802)388-9010

SHULTZ CONSTRUCTION
CONTRACTOR
BALLSTON SPA, NY

STATE OF VERMONT AGENCY OF TRANSPORTATION
COUNTY OF RUTLAND

TOWN OF CASTLETON
VT ROUTE 30 (RURAL MINOR ARTERIAL)
BRIDGE NO.: 93 PROJECT NO.: BRF 015-2(10)

PRECAST WINGWALL DETAILS "CT-WW2"

DATE: APR. 16, 2015
SCALE: NOTED
CHKD: R.M. DFTM: PSS
JOB NO: 23456-015
DWG. NO: WW2

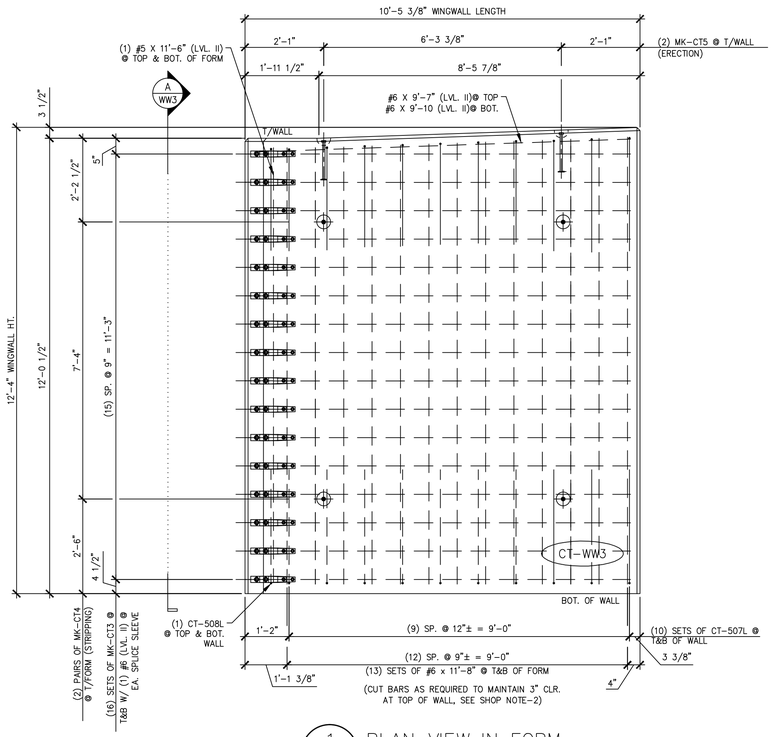

1 / WW3 PLAN VIEW IN FORM

1/2" = 1'-0"

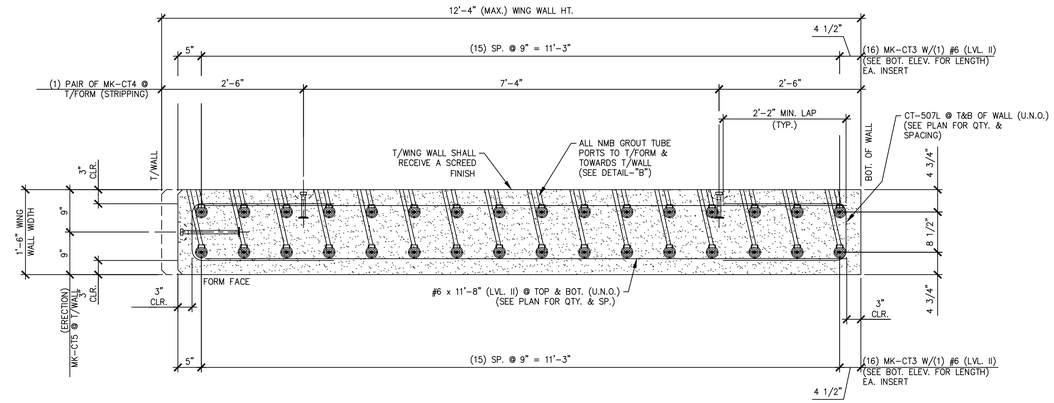

A / WW3 WINGWALL ELEVATION

3/4" = 1'-0"

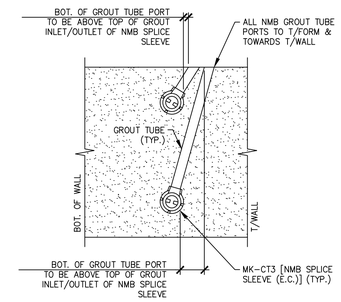

DETAIL – "B"

3/4" = 1'-0"

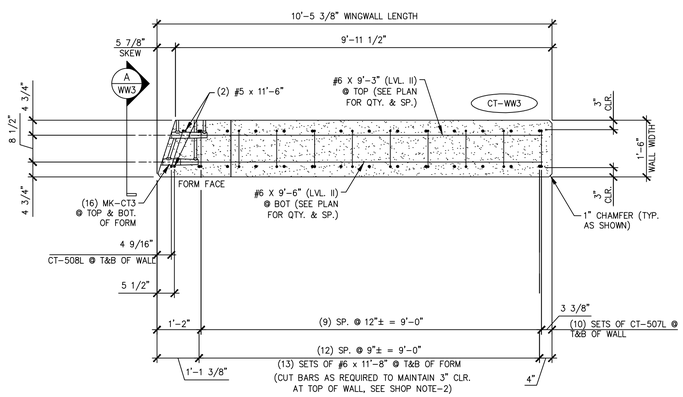

WING WALL BOTTOM ELEVATION

1/2" = 1'-0"

SHOP NOTES:
1. ALL EDGES OF WING WALLS, FORM FACE & T/WALL FACE, SHALL RECEIVE A 1" CHAMFER (UNLESS NOTED OTHERWISE)

2. ENDS OF CUT BARS SHALL BE COATED WITH TOUCH UP PRODUCT SUPPLIED BY THE REBAR MANUFACTURER.

SHOP NOTE:
f'c = 5,000 PSI
f'ci = 3,500 PSI
MIX: #445MSCC

MARK: CT-WW3	QTY.: 1	WT.: 13.95 T	VOL.: 6.89 cy

MATERIAL LIST / WINGWALL

ITEM	MARK	DESCRIPTION	QTY.
1	CT-507L	#5 BENT BAR (LEVEL II, DUAL COATED)	20
2	CT-508L	#5 BENT BAR (LEVEL II, DUAL COATED)	2
3		#5 x 11'-6" (LEVEL II, DUAL COATED)	2
4		#6 x 11'-8" (LEVEL II, DUAL COATED)	26
5		#6 x 9'-3" (LEVEL II, DUAL COATED)	16
6		#6 x 9'-6" (LEVEL II, DUAL COATED)	16
7		#6 x 9'-7" (LEVEL II, DUAL COATED)	1
8		#6 x 9'-10" (LEVEL II, DUAL COATED)	1
9			
10			
11			
12	MK-CT3	NMB SPLICE SLEEVE 6U-X(PG) (EPOXY COATED)	32
13	MK-CT4	4T x 7 1/8" SWIFT LIFT LIFTER	4
14	MK-CT5	8T x 13 3/8" SWIFT LIFT LIFTER	2
15			

APPROVAL STAMP:

J.P. CARRARA & SONS INC.
Precast & Prestress Manufacturer
2464 CASE STR., MIDDLEBURY, VERMONT 05753 Phone:(802)388-6361 Fax:(802)388-9010

SHULTZ CONSTRUCTION
CONTRACTOR
BALLSTON SPA, NY

STATE OF VERMONT AGENCY OF TRANSPORTATION
COUNTY OF RUTLAND

TOWN OF CASTLETON
VT ROUTE 30 (RURAL MINOR ARTERIAL)
BRIDGE NO.: 93 PROJECT NO.: BRF 015-2(10)

PRECAST WINGWALL DETAILS "CT-WW3"

DATE: APR. 16, 2015
SCALE: NOTED
CHKD: R.M. DFTM: PSS
JOB NO: 23456-015
DWG. NO: WW3

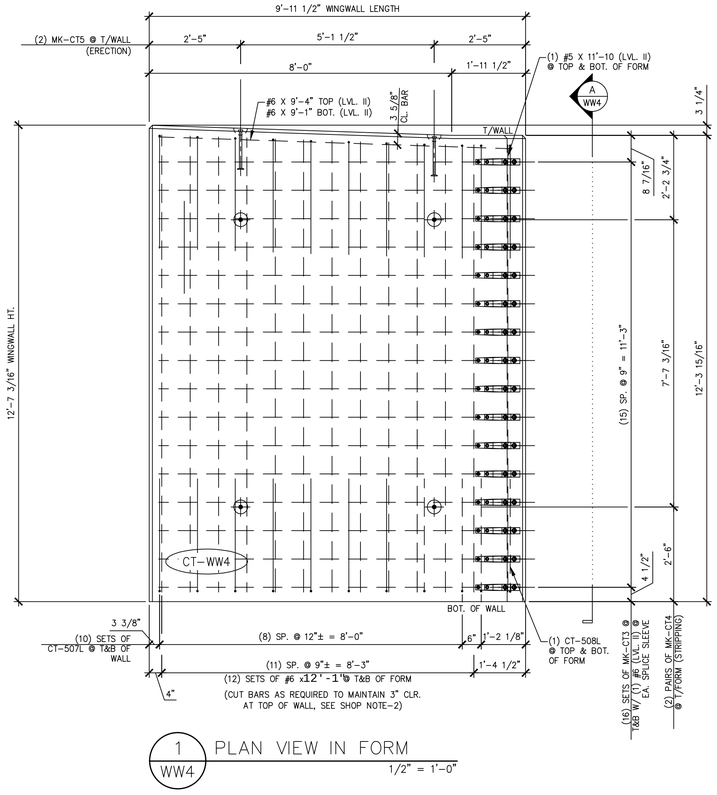

1 / WW4 PLAN VIEW IN FORM

1/2" = 1'-0"

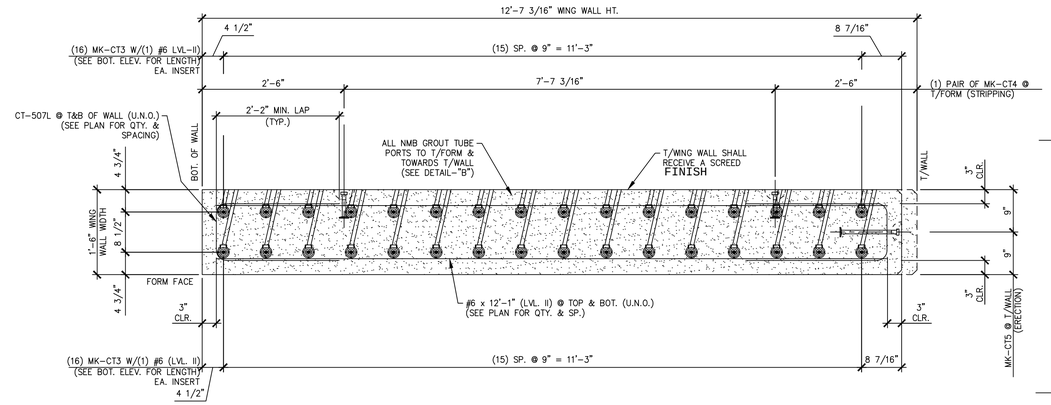

A / WW4 WINGWALL ELEVATION

3/4" = 1'-0"

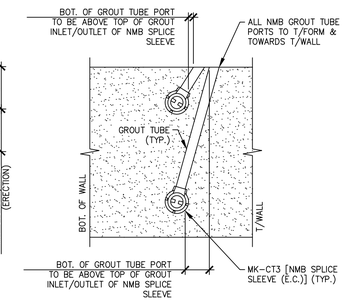

DETAIL – "B"

3/4" = 1'-0"

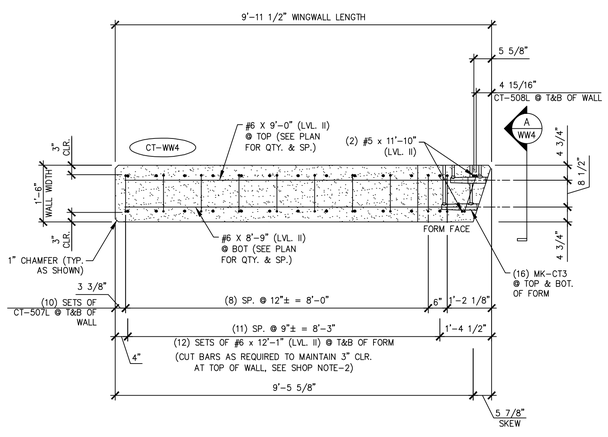

WING WALL BOTTOM ELEVATION

1/2" = 1'-0"

SHOP NOTES:
1. ALL EDGES OF WING WALLS, FORM FACE & T/WALL FACE, SHALL RECEIVE A 1" CHAMFER (UNLESS NOTED OTHERWISE)

2. ENDS OF CUT BARS SHALL BE COATED WITH TOUCH UP PRODUCT SUPPLIED BY THE REBAR MANUFACTURER.

SHOP NOTE:
f'c = 5,000 PSI
f'ci = 3,500 PSI
MIX: #445MSCC

MARK: CT-WW4	QTY.: 1	WT.: 13.59 T	VOL.: 6.71 cy

MATERIAL LIST / WINGWALL

ITEM	MARK	DESCRIPTION	QTY.
1	CT-507L	#5 BENT BAR (LEVEL II, DUAL COATED)	20
2	CT-508L	#5 BENT BAR (LEVEL II, DUAL COATED)	2
3			
4		#5 x 11'-10" (LEVEL II, DUAL COATED)	2
5		#6 x 12'-1" (LEVEL II, DUAL COATED)	24
6		#6 x 9'-4" (LEVEL II, DUAL COATED)	1
7		#6 x 9'-1" (LEVEL II, DUAL COATED)	1
8		#6 x 9'-0" (LEVEL II, DUAL COATED)	16
9		#6 x 8'-9" (LEVEL II, DUAL COATED)	16
10			
11			
12	MK-CT3	NMB SPLICE SLEEVE 6U-X(PG) (EPOXY COATED)	32
13	MK-CT4	4T x 7 1/8" SWIFT LIFT LIFTER	4
14	MK-CT5	8T x 13 3/8" SWIFT LIFT LIFTER	2
15			

APPROVAL STAMP:

J.P. CARRARA & SONS INC.
Precast & Prestress Manufacturer
2464 CASE STR., MIDDLEBURY, VERMONT 05753 Phone:(802)388-6361 Fax:(802)388-9010

SHULTZ CONSTRUCTION
CONTRACTOR
BALLSTON SPA, NY

STATE OF VERMONT AGENCY OF TRANSPORTATION
COUNTY OF RUTLAND

TOWN OF CASTLETON
VT ROUTE 30 (RURAL MINOR ARTERIAL)
BRIDGE NO.: 93 PROJECT NO.: BRF 015-2(10)

PRECAST WINGWALL DETAILS "CT-WW4"

DATE: APR. 16, 2015
SCALE: NOTED
CHKD: R.M. DFTM: PSS
JOB NO: 23456-015
DWG. NO: WW4

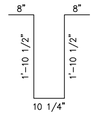

CT-401L
#4 BENT BAR
LEVEL II (DUAL COATED)
USE 2"ø [50 mm] PIN
(840) REQ'D.

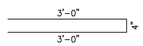

CT-402L
#4 BENT BAR
LEVEL II (DUAL COATED)
USE 3"ø [75 mm] PIN
(720) REQ'D.

THIS BAR NOT USED

CT-403L

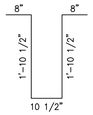

CT-404L
#4 BENT BAR
LEVEL II (DUAL COATED)
USE 2"ø [50 mm] PIN
(16) REQ'D.

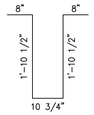

CT-405L
#4 BENT BAR
LEVEL II (DUAL COATED)
USE 2"ø [50 mm] PIN
(64) REQ'D.

THIS BAR NOT USED

CT-406L

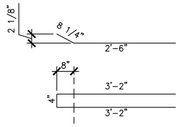

CT-407L
#4 BENT BAR
LEVEL II (DUAL COATED)
USE 2"ø [50 mm] PIN
(39) REQ'D.

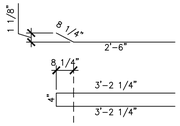

CT-408L
#4 BENT BAR
LEVEL II (DUAL COATED)
USE 2"ø [50 mm] PIN
(15) REQ'D.

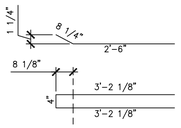

CT-409L
#4 BENT BAR
LEVEL II (DUAL COATED)
USE 2"ø [50 mm] PIN
(12) REQ'D.

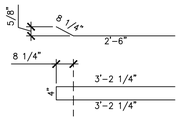

CT-410L
#4 BENT BAR
LEVEL II (DUAL COATED)
USE 2"ø [50 mm] PIN
(15) REQ'D.

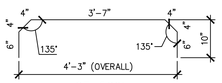

CT-509L
#5 BENT BAR
LEVEL II (DUAL COATED)
USE 2 3/4"ø [70 mm] PIN
(112) REQ'D.

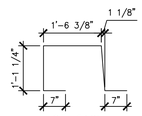

CT-510L
#5 BENT BAR
LEVEL II (DUAL COATED)
USE 2 3/4"ø [70 mm] PIN
(115) REQ'D.

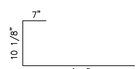

CT-511L
#5 BENT BAR
LEVEL II (DUAL COATED)
USE 2 3/4"ø [70 mm] PIN
(197) REQ'D.

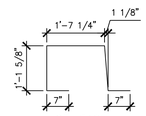

CT-512L
#5 BENT BAR
LEVEL II (DUAL COATED)
USE 2 3/4"ø [70 mm] PIN
(3) REQ'D.

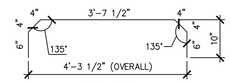

CT-517L
#5 BENT BAR
LEVEL II (DUAL COATED)
USE 2 3/4"ø [70 mm] PIN
(8) REQ'D.

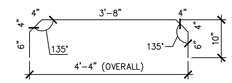

CT-518L
#5 BENT BAR
LEVEL II (DUAL COATED)
USE 2 3/4"ø [70 mm] PIN
(16) REQ'D.

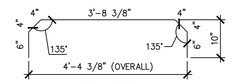

CT-519L
#5 BENT BAR
LEVEL II (DUAL COATED)
USE 2 3/4"ø [70 mm] PIN
(8) REQ'D.

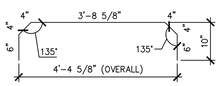

CT-520L
#5 BENT BAR
LEVEL II (DUAL COATED)
USE 2 3/4"ø [70 mm] PIN
(8) REQ'D.

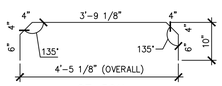

CT-521L
#5 BENT BAR
LEVEL II (DUAL COATED)
USE 2 3/4"ø [70 mm] PIN
(8) REQ'D.

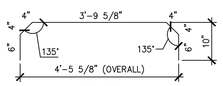

CT-522L
#5 BENT BAR
LEVEL II (DUAL COATED)
USE 2 3/4"ø [70 mm] PIN
(8) REQ'D.

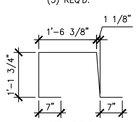

CT-523L
#5 BENT BAR
LEVEL II (DUAL COATED)
USE 2 3/4"ø [70 mm] PIN
(24) REQ'D.

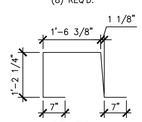

CT-524L
#5 BENT BAR
LEVEL II (DUAL COATED)
USE 2 3/4"ø [70 mm] PIN
(15) REQ'D.

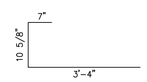

CT-525L
#5 BENT BAR
LEVEL II (DUAL COATED)
USE 2 3/4"ø [70 mm] PIN
(40) REQ'D.

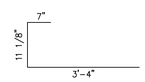

CT-526L
#5 BENT BAR
LEVEL II (DUAL COATED)
USE 2 3/4"ø [70 mm] PIN
(33) REQ'D.

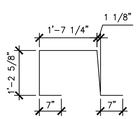

CT-527L
#5 BENT BAR
LEVEL II (DUAL COATED)
USE 2 3/4"ø [70 mm] PIN
(3) REQ'D.

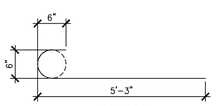

CT-602L
#6 BENT BAR
LEVEL II (DUAL COATED)
USE 4"ø [100 mm] PIN
(88) REQ'D.

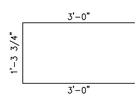

CT-610L
#6 BENT BAR
LEVEL II (DUAL COATED)
USE 3 3/4"ø [95 mm] PIN
(64) REQ'D.

PRESTRESSED NEXT BEAMS

NEXT BEAM MISCELLANEOUS MATERIALS

ITEM	MARK	QTY.	DESCTIPTION	REMARKS
1		112	#4 x 8'-1 1/2" (LEVEL II, DUAL COATED)	
2				
3		976	#5 x 7'-8 1/2" (LEVEL II, DUAL COATED)	
4		48	#5 x 7'-9" (LEVEL II, DUAL COATED)	
5		32	#5 x 7'-10" (LEVEL II, DUAL COATED)	
6		32	#5 x 7'-11" (LEVEL II, DUAL COATED)	
7		32	#5 x 8'-0" (LEVEL II, DUAL COATED)	
8		88	#6 x 66'-9" (W/ (1) 2'-2" STAGGERED LAP) (40' + 28'-11") (LVL. II, DUAL COATED)	
9		6	#5 x 66'-9" (W/ (1) 2'-2" STAGGERED LAP) (40' + 28'-11") (LVL. II, DUAL COATED)	IN PRECAST CONCRETE CURB CAST AS A SECONDARY POUR
10				
11				
12				
13				
14				
15				
16				
17				
18				
19				
20				
21				
22				
23				
24				
25				
26				
27				
28				
29				
30				
31				
32				
33				
34		16	SET OF (4) 1/2"ø x 270 KSI STRAND LIFTING LOOPS	
35		16	2"ø I.D. PVC SLEEVE	
36	MK-CT6	68	DAYTON B-16 1/2"ø x 3" LONG COIL LOOP INSERTS (ELECTROPLATED GALV.)	
37		16	GUARDRAIL ANCHOR PLATE (GALV.)	SUPPLIED BY OTHERS, IN PRECAST CONCRETE CURB CAST AS A SECONDARY POUR
38				

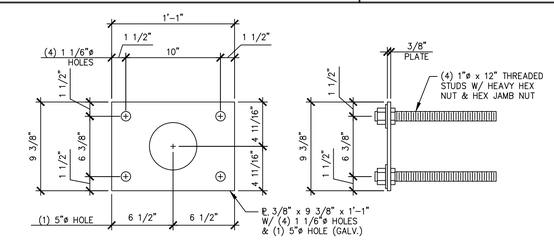

GUARDRAIL ANCHOR PLATE

SUPPLIED BY OTHERS 1 1/2" = 1'-0"

APPROVAL STAMP:

J.P. CARRARA & SONS INC.
Precast & Prestress Manufacturer
2464 CASE STR., MIDDLEBURY, VERMONT 05753 Phone:(802)388-6361 Fax:(802)388-9010

SHULTZ CONSTRUCTION
CONTRACTOR
BALLSTON SPA, NY

STATE OF VERMONT AGENCY OF TRANSPORTATION
COUNTY OF RUTLAND

TOWN OF CASTLETON
VT ROUTE 30 (RURAL MINOR ARTERIAL)
BRIDGE NO.: 93 PROJECT NO.: BRF 015-2(10)

MATERIALS LIST (NEXT BEAMS)

DATE: APR. 17, 2015
SCALE: NOTED
CHKD: R.M. DFTM: PSS
JOB NO: 23456-015
DWG. NO: M1

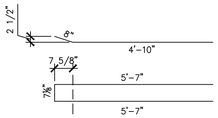

CT-501L
#5 BENT BAR
LEVEL II (DUAL COATED)
USE 2 3/4"ø [70 mm] PIN
160 REQ'D

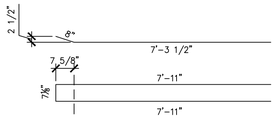

CT-502L
#5 BENT BAR
LEVEL II (DUAL COATED)
USE 2 3/4"ø [70 mm] PIN
(75) REQ'D.

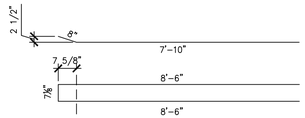

CT-503L
#5 BENT BAR
LEVEL II (DUAL COATED)
USE 2 3/4"ø [70 mm] PIN
(1) REQ'D.

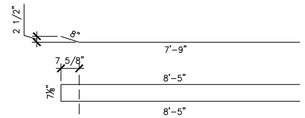

CT-504L
#5 BENT BAR
LEVEL II (DUAL COATED)
USE 2 3/4"ø [70 mm] PIN
(1) REQ'D.

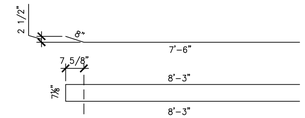

CT-505L
#5 BENT BAR
LEVEL II (DUAL COATED)
USE 2 3/4"ø [70 mm] PIN
(1) REQ'D.

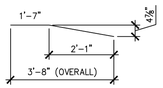

CT-601L
#6 BENT BAR
LEVEL II (DUAL COATED)
USE 4"ø [100 mm] PIN
(2) REQ'D.

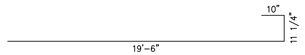

CT-901L
#9 BENT BAR
LEVEL II (DUAL COATED)
USE 6"ø PIN
80 REQ'D

PRECAST APPROACH SLABS

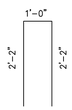

CT-507L
#5 BENT BAR
LEVEL II (DUAL COATED)
USE 2 3/4"ø [70 mm] PIN
(76) REQ'D.

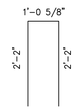

CT-508L
#5 BENT BAR
LEVEL II (DUAL COATED)
USE 2 3/4"ø [70 mm] PIN
(8) REQ'D.

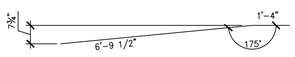

CT-603L
#6 BENT BAR
LEVEL II (DUAL COATED)
USE 4"ø [100 mm] PIN
(1) REQ'D.

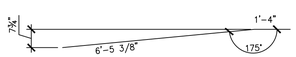

CT-604L
#6 BENT BAR
LEVEL II (DUAL COATED)
USE 4"ø [100 mm] PIN
(1) REQ'D.

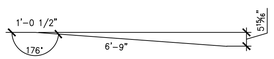

CT-605L
#6 BENT BAR
LEVEL II (DUAL COATED)
USE 4"ø [100 mm] PIN
(1) REQ'D.

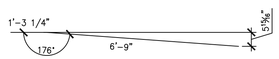

CT-606L
#6 BENT BAR
LEVEL II (DUAL COATED)
USE 4"ø [100 mm] PIN
(1) REQ'D.

PRECAST WINGWALLS

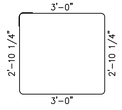

CT-411L
#4 BENT BAR
LEVEL II (DUAL COATED)
USE 2"ø [50 mm] PIN
(66) REQ'D.

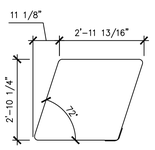

CT-412L
#4 BENT BAR
LEVEL II (DUAL COATED)
USE 2"ø [50 mm] PIN
(92) REQ'D.

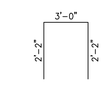

CT-513L
#5 BENT BAR
LEVEL II (DUAL COATED)
USE 2 3/4"ø [70 mm] PIN
(56) REQ'D.

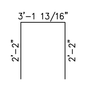

CT-514L
#5 BENT BAR
LEVEL II (DUAL COATED)
USE 2 3/4"ø [70 mm] PIN
(18) REQ'D.

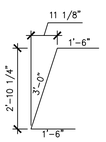

CT-515L
#5 BENT BAR
LEVEL II (DUAL COATED)
USE 2 3/4"ø [70 mm] PIN
(16) REQ'D.

CT-516L
#5 BENT BAR
LEVEL II (DUAL COATED)
USE 2 3/4"ø [70 mm] PIN
(4) REQ'D.

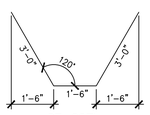

CT-607L
#6 BENT BAR
LEVEL II (DUAL COATED)
USE 4"ø [100 mm] PIN
(24) REQ'D.

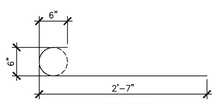

CT-608L
#6 BENT BAR
LEVEL II (DUAL COATED)
USE 4"ø [100 mm] PIN
(66) REQ'D.

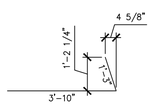

CT-609L
#6 BENT BAR
LEVEL II (DUAL COATED)
USE 4"ø [100 mm] PIN
(126) REQ'D.

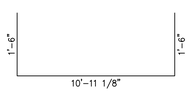

CT-614L
#6 BENT BAR
LEVEL II (DUAL COATED)
USE 4"ø [100 mm] PIN
(4) REQ'D.

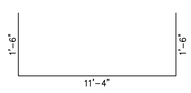

CT-615L
#6 BENT BAR
LEVEL II (DUAL COATED)
USE 4"ø [100 mm] PIN
(8) REQ'D.

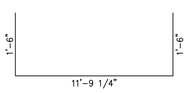

CT-616L
#6 BENT BAR
LEVEL II (DUAL COATED)
USE 4"ø [100 mm] PIN
(4) REQ'D.

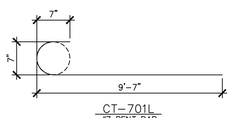

CT-701L
#7 BENT BAR
LEVEL II (DUAL COATED)
USE 5"ø PIN
(150) REQ'D.

PRECAST ABUTMENTS

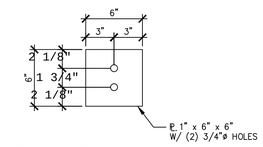

EM-CT1
1 1/2" = 1'-0"

APPROACH SLAB MISCELLANEOUS MATERIALS

ITEM	MARK	QTY.	DESCTIPTION	REMARKS
1		64	#6 x 19'-6" (LEVEL II, DUAL COATED)	
2				
3	MK-CT1	24	4T x 7 1/8" SWIFT LIFT LIFTER	
4				
5		40	4" O.D. x 1'-3" PVC SLEEVE	

WINGWALLS MISCELLANEOUS MATERIALS

ITEM	MARK	QTY.	DESCTIPTION	REMARKS
1		2	#5 x 10'-11" (LEVEL II, DUAL COATED)	
2		4	#5 x 11'-6" (LEVEL II, DUAL COATED)	
3		2	#5 x 11'-10" (LEVEL II, DUAL COATED)	
4		29	#6 x 7'-9" (LEVEL II, DUAL COATED)	
5		29	#6 x 8'-0" (LEVEL II, DUAL COATED)	
6		16	#6 x 8'-9" (LEVEL II, DUAL COATED)	
7		16	#6 x 9'-0" (LEVEL II, DUAL COATED)	
8		1	#6 x 9'-1" (LEVEL II, DUAL COATED)	
9		16	#6 x 9'-3" (LEVEL II, DUAL COATED)	
10		1	#6 x 9'-4" (LEVEL II, DUAL COATED)	
11		16	#6 x 9'-6" (LEVEL II, DUAL COATED)	
12		1	#6 x 9'-7" (LEVEL II, DUAL COATED)	
13		1	#6 x 9'-10" (LEVEL II, DUAL COATED)	
14		22	#6 x 10'-11" (LEVEL II, DUAL COATED)	
15		22	#6 x 11'-6" (LEVEL II, DUAL COATED)	
16		26	#6 x 11'-8" (LEVEL II, DUAL COATED)	
17		24	#6 x 12'-1" (LEVEL II, DUAL COATED)	
18	MK-CT3	126	NMB SPLICE SLEEVE 6U-X(PG) (EPOXY COATED)	
19	MK-CT4	16	4T x 7 1/8" SWIFT LIFT LIFTER	
20	MK-CT5	8	8T x 13 3/8" SWIFT LIFT LIFTER	
21		1	BRIDGE PLAQUE (SUPPLIED BY OTHERS)	

ABUTMENT MISCELLANEOUS MATERIALS

ITEM	MARK	QTY.	DESCTIPTION	REMARKS
1		4	#8 x 22'-1" (LEVEL II, DUAL COATED)	
2		4	#8 x 21'-2" (LEVEL II, DUAL COATED)	
3		11	#7 x 11'-10" (LEVEL II, DUAL COATED)	
4		22	#7 x 11'-6" (LEVEL II, DUAL COATED)	
5		11	#7 x 10'-11" (LEVEL II, DUAL COATED)	
6		29	#7 x 9'-9" (LEVEL II, DUAL COATED)	
7		29	#7 x 9'-3" (LEVEL II, DUAL COATED)	
8		4	#6 x 11'-10" (LEVEL II, DUAL COATED)	
9		8	#6 x 11'-6" (LEVEL II, DUAL COATED)	
10		4	#6 x 10'-11" (LEVEL II, DUAL COATED)	
11		35	#5 x 22'-1" (LEVEL II, DUAL COATED)	
12		35	#5 x 21'-2" (LEVEL II, DUAL COATED)	
13				
14				
15				
16				
17		1	2'-0" ø x 9'-0 1/16" CORRUGATED STEEL PIPE (GALV.)	
18		1	2'-0" ø x 8'-11 13/16" CORRUGATED STEEL PIPE (GALV.)	
19		1	2'-0" ø x 8'-11 7/16" CORRUGATED STEEL PIPE (GALV.)	
20		1	2'-0" ø x 8'-10 13/16" CORRUGATED STEEL PIPE (GALV.)	
21		1	2'-0" ø x 8'-9 7/16" CORRUGATED STEEL PIPE (GALV.)	
22		1	2'-0" ø x 8'-7 1/16" CORRUGATED STEEL PIPE (GALV.)	
23		1	2'-0" ø x 8'-6 13/16" CORRUGATED STEEL PIPE (GALV.)	
24		1	2'-0" ø x 8'-6 3/16" CORRUGATED STEEL PIPE (GALV.)	
25		1	2'-0" ø x 8'-5 13/16" CORRUGATED STEEL PIPE (GALV.)	
26		1	2'-0" ø x 8'-5 9/16" CORRUGATED STEEL PIPE (GALV.)	
27		1	2'-0" ø x 8'-3 7/16" CORRUGATED STEEL PIPE (GALV.)	
28		1	2'-0" ø x 8'-1 1/16" CORRUGATED STEEL PIPE (GALV.)	
29	MK-CT2	8	20T x 19 3/4" SWIFT LIFT LIFTER	
30		48	1/2"ø SINGLE USE STRESSING CHUCK (GALV.)	FOR ERECTION
31	EM-CT1	24	PL. 1" x 6" x 6" W/(2) 3/4"ø HOLES (GALV.)	FOR ERECTION, SEE DETAIL THIS SHEET
32		24	1/2"ø x 47'-0" POLY-STRAND	FOR ERECTION
33				
34				

APPROVAL STAMP:

J.P. CARRARA & SONS INC.
Precast & Prestress Manufacturer
2464 CASE STR., MIDDLEBURY, VERMONT 05753 Phone:(802)388-6361 Fax:(802)388-9010

SHULTZ CONSTRUCTION
CONTRACTOR
BALLSTON SPA, NY

STATE OF VERMONT AGENCY OF TRANSPORTATION
COUNTY OF RUTLAND

DATE: APR. 17, 2015
SCALE: NOTED

TOWN OF CASTLETON
VT ROUTE 30 (RURAL MINOR ARTERIAL)
BRIDGE NO.: 93 PROJECT NO.: BRF 015-2(10)

CHKD: R.M. DFTM: PSS
JOB NO: 23456-015

MATERIALS LIST
(ABUTMENTS, WING WALLS & APPROACH SLABS)

DWG. NO: M2