VHB Proj. 57632
Castleton, VT
Route VT 30 - Bridge #93
Project No. BRF 015-2(10)

Prepared by ***VHB*/Vanasse Hangen Brustlin, Inc.**

Table of Contents

Geometry **1.0**

NEXT Beam Design **2.0**

Design Summary 2.1

Conspan Inputs 2.2

Conspan Report – Interior Beam 2.3

Conspan Report – Exterior Beam 2.4

Interior Deck Design 2.5

Overhang Deck Design 2.6

Hairpin Connection 2.7

Bearing Design **3.0**

Approach Slab Design **4.0**

Precast Concrete Curb Height **5.0**

Load Rating **6.0**

Section 1.0

Geometry

VHB *Computations*

Project: BR #93 Project # 57632.00
Location: Castleton, VT Sheet of
Calculated by: EAF Date: 1/24/14
Checked by: Date:
Title Geometry Check of STA. & Elev.

LABEL	STA. (from nu1.dgn)	E.G. Elevation (from pro.dgn)
BEGIN APPROACH	63+90.00	Match Existing
BEGIN PROJECT	64+70.00	402.15
BEGIN BRIDGE	66+00.54	410.84
℄ BRG. ABUT. 1	66+01.94	410.90
℄ BRG. ABUT. 2	66+69.24	413.37
END BRIDGE	66+70.64	413.40
END PROJECT	68+55.00	414.74
END APPROACH	69+35.00	Match Existing

vt 30 align

```
            Project Name: z12b138
             Description: VT30 Match
Horizontal Alignment Name: VT30 Prop Match
             Description: Matching VT30
                   Style: align2
                                          STATION      NORTHING       EASTING

Element: Linear
             POB (       1)            62+97.00   402991.7138  1452481.9272
              PC (       2)            63+36.03   403030.6415  1452484.6987
         Tangent Direction:    N  4^04'20.15" E
            Tangent Length:                39.03

Element: Circular
              PC (       2)            63+36.03   403030.6415  1452484.6987
              PI (        )            64+54.29   403148.6076  1452493.0972
              CC (       5)                       402888.6123  1454479.6492
              PT (       6)            65+72.28   403264.7618  1452515.3398
                     Radius:             2000.00
                      Delta:         6^46'05.47" Right
  Degree of Curvature(Arc):          2^51'53.24"
                     Length:               236.25
                   Tangent:                118.26
                     Chord:                236.12
           Middle Ordinate:                  3.49
                  External:                  3.49
         Tangent Direction:    N  4^04'20.15" E
          Radial Direction:    S 85^55'39.85" E
           Chord Direction:    N  7^27'22.89" E
          Radial Direction:    S 79^09'34.38" E
         Tangent Direction:    N 10^50'25.62" E

Element: Linear
              PT (       6)            65+72.28   403264.7618  1452515.3398
              PC (       3)            67+32.61   403422.2280  1452545.4933
         Tangent Direction:    N 10^50'25.62" E
            Tangent Length:               160.33

Element: Circular
              PC (       3)            67+32.61   403422.2280  1452545.4933
              PI (        )            68+22.58   403510.5944  1452562.4147
              CC (       7)                       404832.7886  1445179.3329
              PT (       8)            69+12.54   403599.3412  1452577.2115
                     Radius:             7500.00
                      Delta:         1^22'28.57" Left
  Degree of Curvature(Arc):          0^45'50.20"
                     Length:               179.94
                   Tangent:                 89.97
                     Chord:                179.93
           Middle Ordinate:                  0.54
                  External:                  0.54
         Tangent Direction:    N 10^50'25.62" E
          Radial Direction:    S 79^09'34.38" E
           Chord Direction:    N 10^09'11.33" E
          Radial Direction:    S 80^32'02.95" E
         Tangent Direction:    N  9^27'57.05" E

Element: Linear
              PT (       8)            69+12.54   403599.3412  1452577.2115
             POE (       4)            70+16.00   403701.3895  1452594.2260
         Tangent Direction:    N  9^27'57.05" E
            Tangent Length:               103.46
```

Project Name: z12b138
Description: VT30 Match
Horizontal Alignment Name: VT30 Prop Match
Description: Matching VT30
Style: align2
Vertical Alignment Name: Lowering Rd 1'
Description: Loweing Road for K Value
Style: align2

		STATION	ELEVATION
Element: Linear			
	POB	63+90.00	395.03
	PVC	64+16.09	397.46
Tangent Grade:		9.30	
Tangent Length:		26.09	
Element: Parabola			
	PVC	64+16.09	397.46
	PVI	64+66.09	402.11
	PVT	65+16.09	405.63
Length:		100.00	
Entrance Grade:		9.30	
Exit Grade:		7.04	
r = (g2 - g1) / L:		-2.26	
K = 1 / (g2 - g1):		44.30	
Middle Ordinate:		-0.28	
Element: Linear			
	PVT	65+16.09	405.63
	PVC	65+33.54	406.86
Tangent Grade:		7.04	
Tangent Length:		17.45	
Element: Parabola			
	PVC	65+33.54	406.86
	PVI	66+33.54	413.90
	PVT	67+33.54	414.32
Length:		200.00	
Entrance Grade:		7.04	
Exit Grade:		0.42	
r = (g2 - g1) / L:		-3.31	
K = 1 / (g2 - g1):		30.20	
Middle Ordinate:		-1.66	
Element: Linear			
	PVT	67+33.54	414.32
	PVC	67+61.00	414.44
Tangent Grade:		0.42	
Tangent Length:		27.46	
Element: Parabola			
	PVC	67+61.00	414.44
	PVI	68+36.00	414.76
	PVT	69+11.00	414.83
Length:		150.00	
Entrance Grade:		0.42	
Exit Grade:		0.09	
r = (g2 - g1) / L:		-0.22	
K = 1 / (g2 - g1):		458.23	
Middle Ordinate:		-0.06	
Element: Linear			
	PVT	69+11.00	414.83

	road vert	
POE	69+35.00	414.85
Tangent Grade:	0.09	
Tangent Length:	24.00	

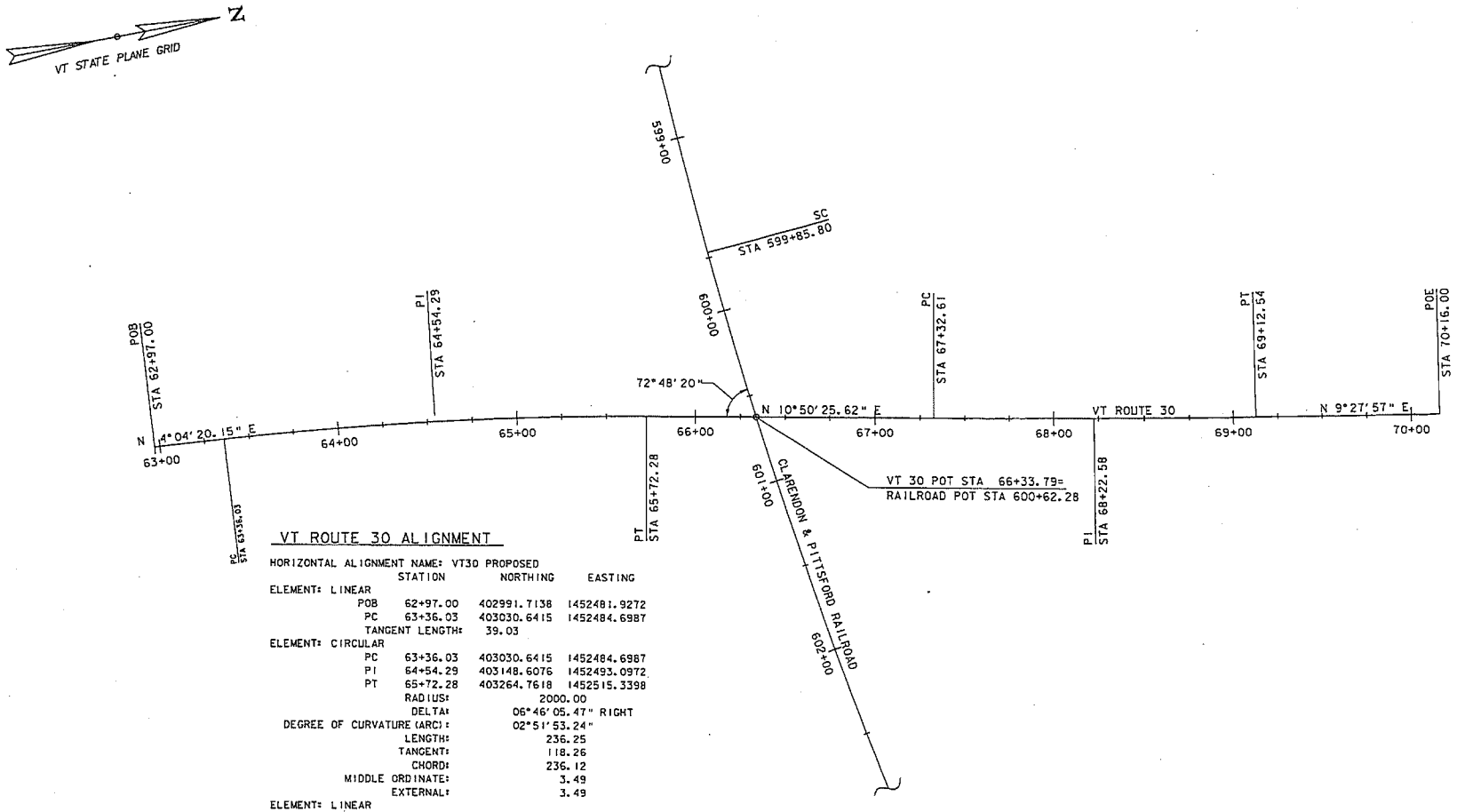

VT ROUTE 30 ALIGNMENT

HORIZONTAL ALIGNMENT NAME: VT30 PROPOSED

	STATION	NORTHING	EASTING
ELEMENT: LINEAR			
POB	62+97.00	402991.7138	1452481.9272
PC	63+36.03	403030.6415	1452484.6987
TANGENT LENGTH:	39.03		
ELEMENT: CIRCULAR			
PC	63+36.03	403030.6415	1452484.6987
PI	64+54.29	403148.6076	1452493.0972
PT	65+72.28	403264.7618	1452515.3398
RADIUS:	2000.00		
DELTA:	06°46' 05.47" RIGHT		
DEGREE OF CURVATURE (ARC):	02°51' 53.24"		
LENGTH:	236.25		
TANGENT:	118.26		
CHORD:	236.12		
MIDDLE ORDINATE:	3.49		
EXTERNAL:	3.49		
ELEMENT: LINEAR			
PT	65+72.28	403264.7618	1452515.3398
PC	67+32.61	403422.2280	1452545.4933
TANGENT LENGTH:	160.33		
ELEMENT: CIRCULAR			
PC	67+32.61	403422.2280	1452545.4933
PI	68+22.58	403510.5944	1452562.4147
PT	69+12.54	403599.3412	145257.2115
RADIUS:	7500.00		
DELTA:	01°22' 28.57" LEFT		
DEGREE OF CURVATURE (ARC):	00°45' 50.20"		
LENGTH:	179.94		
TANGENT:	89.97		
CHORD:	179.93		
MIDDLE ORDINATE:	0.54		
EXTERNAL:	0.54		
ELEMENT: LINEAR			
PT	69+12.54	403599.3412	1452577.2115
POE	70+16.00	403701.3895	1452594.2260
TANGENT LENGTH:	103.46		

VHB Vanasse Hangen Brustlin, Inc.

PROJECT NAME: CASTLETON	
PROJECT NUMBER: BRF 015-2(10)	
FILE NAME: z12b138align.dgn	PLOT DATE: 1/17/2014
PROJECT LEADER: S.E. BURBANK	DRAWN BY: E.A. FIALA
DESIGNED BY: E.A. FIALA	CHECKED BY: S.E. BURBANK
ROADWAY ALIGNMENT LAYOUT SHEET	SHEET 9 OF 63

rail align

```
            Project Name: z12b138
             Description: VT30 Match
Horizontal Alignment Name: Rail CL Update
             Description: Match Existing
                   Style: align1
```

	STATION	NORTHING	EASTING
Element: Linear			
POB (9)	588+00.00	403257.6281	1451266.5376
PC (10)	592+77.61	403280.7309	1451743.5902
Tangent Direction:	N 87^13'38.76" E		
Tangent Length:	477.61		
Element: Circular			
PC (10)	592+77.61	403280.7309	1451743.5902
PI ( )	592+80.54	403280.8725	1451746.5136
CC (12)		413269.0251	1451259.8748
PT (13)	592+83.47	403281.0158	1451749.4370
Radius:	10000.00		
Delta:	0^02'00.74" Left		
Degree of Curvature(Arc):	0^34'22.65"		
Length:	5.85		
Tangent:	2.93		
Chord:	5.85		
Middle Ordinate:	0.00		
External:	0.00		
Tangent Direction:	N 87^13'38.76" E		
Radial Direction:	S 2^46'21.24" E		
Chord Direction:	N 87^12'38.39" E		
Radial Direction:	S 2^48'21.98" E		
Tangent Direction:	N 87^11'38.02" E		
Element: Linear			
PT (13)	592+83.47	403281.0158	1451749.4370
TS (14)	597+85.80	403305.6084	1452251.1725
Tangent Direction:	N 87^11'38.02" E		
Tangent Length:	502.34		
Element: Clothoid			
TS (14)	597+85.80	403305.6084	1452251.1725
SPI (15)	599+19.15	403312.1363	1452384.3545
SC (16)	599+85.80	403317.7346	1452450.7935
Entrance Radius:	0.00		
Exit Radius:	2850.00		
Length:	200.00		
Angle:	2^00'37.36" Left		
Constant:	754.98		
Long Tangent:	133.34		
Short Tangent:	66.67		
Long Chord:	199.99		
Xs:	199.98		
Ys:	2.34		
P:	0.58		
K:	100.00		
Tangent Direction:	N 87^11'38.02" E		
Radial Direction:	S 2^48'21.98" E		
Chord Direction:	N 86^31'25.59" E		
Radial Direction:	S 4^48'59.34" E		
Tangent Direction:	N 85^11'00.66" E		
Element: Circular			
SC (16)	599+85.80	403317.7346	1452450.7935
PI ( )	603+85.74	403351.3147	1452849.3132

```
                                        rail align
              CC (       17)                          406157.6705  1452211.4946
              CS (       23)            607+80.48     403493.2841  1453223.1986
                     Radius:                2850.00
                      Delta:          15^58'33.49" Left
  Degree of Curvature(Arc):            2^00'37.36"
                     Length:                 794.67
                    Tangent:                 399.93
                      Chord:                 792.10
          Middle Ordinate:                    27.65
                  External:                   27.92
        Tangent Direction:     N 85^11'00.66" E
         Radial Direction:     S  4^48'59.34" E
          Chord Direction:     N 77^11'43.91" E
         Radial Direction:     S 20^47'32.84" E
        Tangent Direction:     N 69^12'27.16" E

Element: Clothoid
              CS (       23)            607+80.48     403493.2841  1453223.1986
             SPI (       24)            608+47.15     403516.9524  1453285.5307
              ST (       25)            609+80.48     403568.6306  1453408.4512
          Entrance Radius:                2850.00
              Exit Radius:                   0.00
                   Length:                 200.00
                    Angle:            2^00'37.36" Left
                 Constant:                 754.98
             Long Tangent:                 133.34
            Short Tangent:                  66.67
               Long Chord:                 199.99
                       Xs:                 199.98
                       Ys:                   2.34
                        P:                   0.58
                        K:                 100.00
        Tangent Direction:     N 69^12'27.16" E
         Radial Direction:     S 20^47'32.84" E
          Chord Direction:     N 67^52'02.23" E
         Radial Direction:     S 22^48'10.20" E
        Tangent Direction:     N 67^11'49.80" E

Element: Linear
              ST (       25)            609+80.48     403568.6306  1453408.4512
             POE (       11)            611+00.00     403614.9526  1453518.6317
        Tangent Direction:     N 67^11'49.80" E
           Tangent Length:                 119.52
```

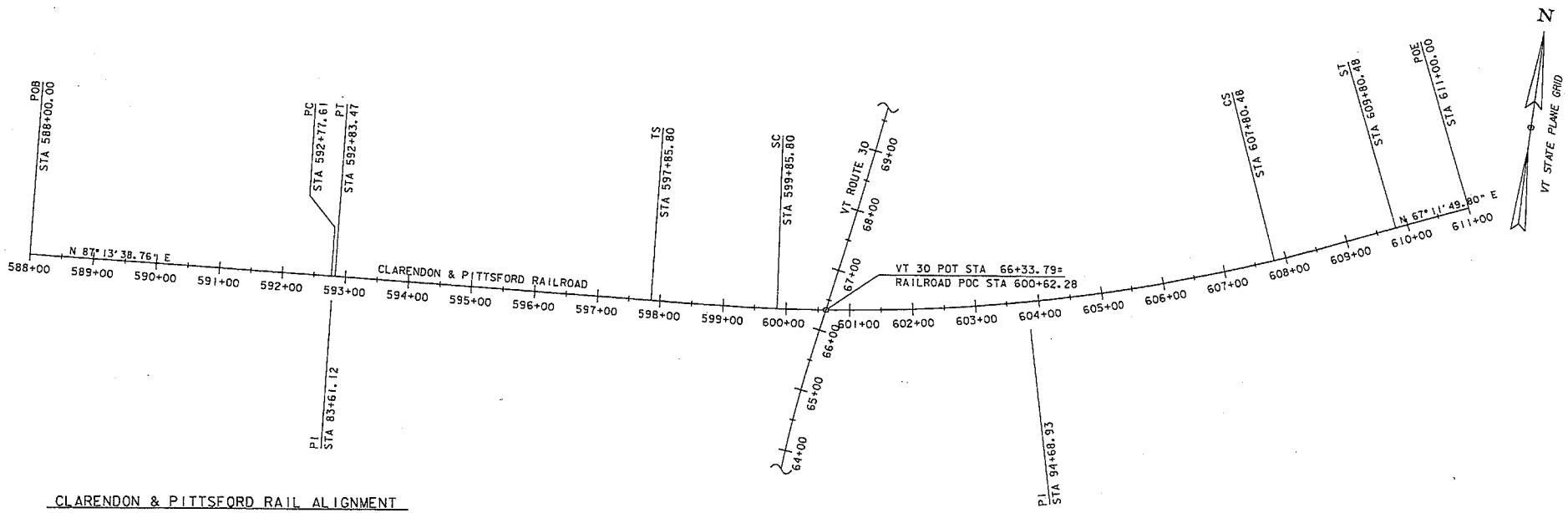

CLARENDON & PITTSFORD RAIL ALIGNMENT

PROJECT NAME: Z12B138
DESCRIPTION: VT30 MATCH
HORIZONTAL ALIGNMENT NAME: RAIL CL
DESCRIPTION: MATCH EXISTING
STYLE: ALIGN1

	STATION	NORTHING	EASTING
ELEMENT: LINEAR			
POB	588+00.00	403257.6281	1451266.5376
PC	592+77.61	403280.7309	1451743.5902
TANGENT DIRECTION:	N 87° 13' 38.76" E		
TANGENT LENGTH:	483.19		
ELEMENT: CIRCULAR			
PC	592+77.61	403280.7309	1451743.5902
PI	592+80.54	403280.8725	1451746.5136
CC		413269.0251	1451259.8748
PT	592+83.54	403281.0158	1451749.4370
RADIUS:	10000.00		
DELTA:	0°02' 00.74" LEFT		
DEGREE OF CURVATURE (ARC):	0°34' 22.65"		
LENGTH:	5.85		
TANGENT:	2.93		
CHORD:	5.85		
MIDDLE ORDINATE:	0.00		
EXTERNAL:	0.00		
ELEMENT: LINEAR			
PT	592+83.47	403281.0158	1451749.4370
TS	597+85.80	403305.6084	1452251.1725
TANGENT DIRECTION:	N 87° 11' 38.02" E		
TANGENT LENGTH:	502.34		

	STATION	NORTHING	EASTING
ELEMENT: CLOTHOID			
TS	597+85.80	403305.6084	1452251.1725
SPI	599+19.15	403312.1363	1452384.3545
SC	599+85.80	403317.7346	1452450.7935
ENTRANCE RADIUS:	0.00		
EXIT RADIUS:	2850.00		
LENGTH:	200.00		
ANGLE:	2°00' 37.36" LEFT		
CONSTANT:	754.98		
LONG TANGENT:	133.34		
SHORT TANGENT:	66.67		
LONG CHORD:	199.99		
XS:	199.98		
YS:	2.34		
P:	0.58		
K:	100.00		
ELEMENT: CIRCULAR			
SC	599+85.80	403317.7346	1452450.7935
PI	603+85.74	403351.3147	1452849.3132
CC		406157.6705	1452211.4946
CS	607+80.48	403493.2841	1453223.1986
RADIUS:	2850.00		
DELTA:	15°58' 33.49" LEFT		
DEGREE OF CURVATURE (ARC):	2°00' 37.36"		
LENGTH:	794.67		
TANGENT:	399.93		
CHORD:	792.10		
MIDDLE ORDINATE:	27.65		
EXTERNAL:	27.92		

	STATION	NORTHING	EASTING
ELEMENT: CLOTHOID			
CS	607+80.48	403493.2841	1453223.1986
SPI	608+47.15	403516.9524	1453285.5307
ST	609+80.48	403568.6306	1453408.4512
ENTRANCE RADIUS:	2850.00		
EXIT RADIUS:	0.00		
LENGTH:	200.00		
ANGLE:	2°00' 37.36" LEFT		
CONSTANT:	754.98		
LONG TANGENT:	133.34		
SHORT TANGENT:	66.67		
LONG CHORD:	199.99		
XS:	199.98		
YS:	2.34		
P:	0.58		
K:	100.00		
ELEMENT: LINEAR			
ST	609+80.48	403568.6306	1453408.4512
POE	611+00.00	403612.7901	1453513.4879
TANGENT DIRECTION:	N 67° 11' 49.80" E		
TANGENT LENGTH:	119.52		

Vanasse Hangen Brustlin, Inc.

PROJECT NAME: CASTLETON
PROJECT NUMBER: BRF 015-2(10)

FILE NAME: z12b138align_rail.dgn
PROJECT LEADER: S.E. BURBANK
DESIGNED BY: E.A. FIALA
RAIL ALIGNMENT LAYOUT SHEET

PLOT DATE: 1/17/2014
DRAWN BY: C.J. HAKEY
CHECKED BY: S.E. BURBANK
SHEET 10 OF 63

Section 2.0

NEXT Beam Design

Section 2.1

Design Summary

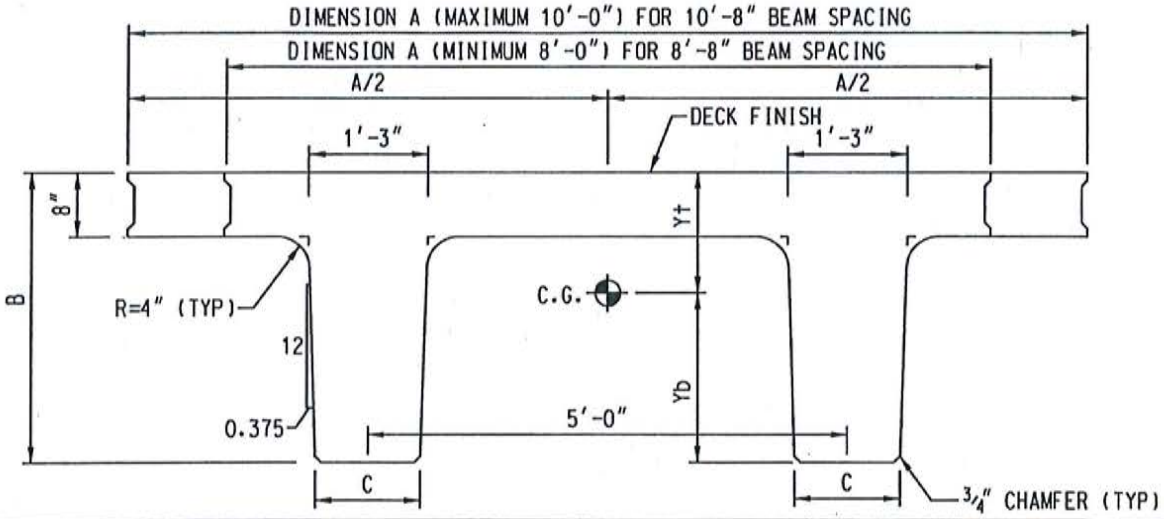

NEXT BEAM - SECTION PROPERTIES

BEAM DESIGNATION	BEAM WIDTH INCHES	BEAM DEPTH INCHES	BASE STEM WIDTH INCHES	AREA IN2	I IN4	Yb INCHES	Yt INCHES	St IN3	Sb IN3	WEIGHT PLF
	A	B	C			D	E			
				MINIMUM WIDTH BEAMS						
NEXT 40 D	96.00	40.00	13.00	1666	238059	25.47	14.54	16378	9348	1735
NEXT 36 D	96.00	36.00	13.25	1562	176674	23.03	12.97	13624	7671	1627
NEXT 32 D	96.00	32.00	13.50	1455	126111	20.57	11.43	11033	6131	1516
NEXT 28 D	96.00	28.00	13.75	1346	85651	18.06	9.94	8620	4742	1402
				MAXIMUM WIDTH BEAMS						
NEXT 40 D	120.00	40.00	13.00	1858	258171	26.55	13.45	19201	9722	1935
NEXT 36 D	120.00	36.00	13.25	1754	191453	24.01	11.99	15973	7973	1827
NEXT 32 D	120.00	32.00	13.50	1647	136502	21.44	10.57	12920	6368	1716
NEXT 28 D	120.00	28.00	13.75	1538	92597	18.80	9.20	10069	4924	1602

NOTES:

1. THE WIDTH OF BEAMS SHOWN ARE THE MINIMUM AND MAXIMUM WIDTH BEAMS. VARIATION BETWEEN THESE LIMITS IS ALLOWED IN ORDER TO CONSTRUCT A BRIDGE TO THE REQUIRED WIDTH. THE VARIATION IN WIDTH IS ACCOMPLISHED BY VARYING THE OVERHANG DIMENSIONS. THE DESIGNER WILL NEED TO CALCULATE BEAM PROPERTIES FOR BEAMS THAT ARE NOT EQUAL TO THE WIDTHS LISTED.

2. THE SPACING OF BEAMS ON A TYPICAL BRIDGE SHALL BE THE WIDTH OF THE BEAM PLUS 8" (EX.: BEAM SPACING = 10'-8" FOR THE 10'-0" SECTION).

3. BRIDGES WITH SMALL CURVATURE CAN BE BUILT USING THESE SECTIONS BY VARYING THE OVERHANG OF THE FASCIA BEAMS ALONG THE LENGTH. INTERIOR BEAMS SHOULD ALWAYS BE SYMMETRICAL ABOUT THE VERTICAL AXIS. NON-SYMMETRICAL SECTIONS ARE POSSIBLE, HOWEVER THE BEAM MAY REQUIRE A SPECIAL DESIGN WITH A NON-SYMMETRICAL STRAND PATTERN.

4. MODIFY THE FASCIA BEAM TO MATCH STATE STANDARDS.

5. THE STEM WIDTH AND SPACING ARE FIXED.

6. THE ENDS OF THE BEAMS SHOULD BE SKEWED FOR SKEWED BRIDGES. THE ACUTE CORNERS OF THE FLANGE OVERHANGS SHOULD BE CHAMFERED 6"x6" IN ORDER TO MINIMIZE CASTING AND HANDLING DAMAGE.

REVISIONS		
NO.	DATE	DESCRIPTION

NORTHEAST EXTREME BRIDGE TEE
NEXT D BEAMS

BEAM PROPERTIES

ISSUE DATE: 01-04-10

SHEET: NEXT D -01

PRECAST/PRESTRESSED CONCRETE INSTITUTE NORTHEAST

PCI WWW.PCINE.ORG

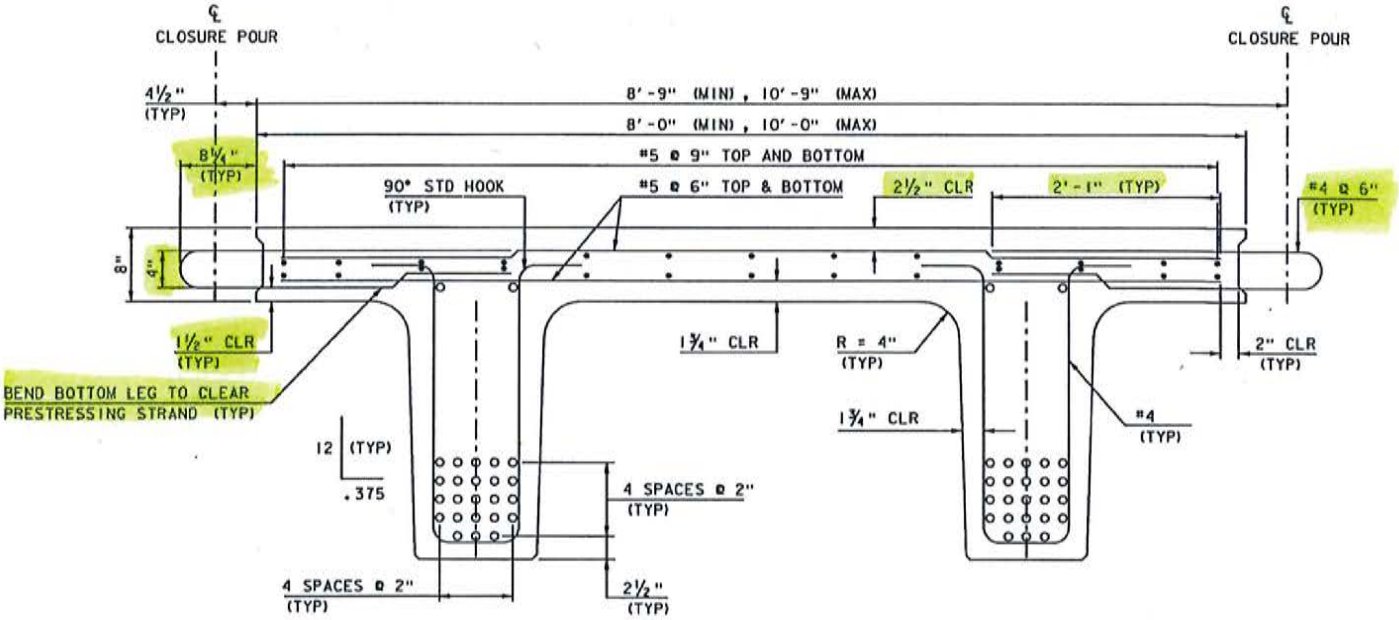

TYPICAL NEXT D REINFORCING

NOT TO SCALE

= VTrans Modifications to PCI NE NEXT D Typical Beam Reinforcing Section

NEXT Beam Modification, VTrans Structures Consultant SharepOint Site
2/11/2014

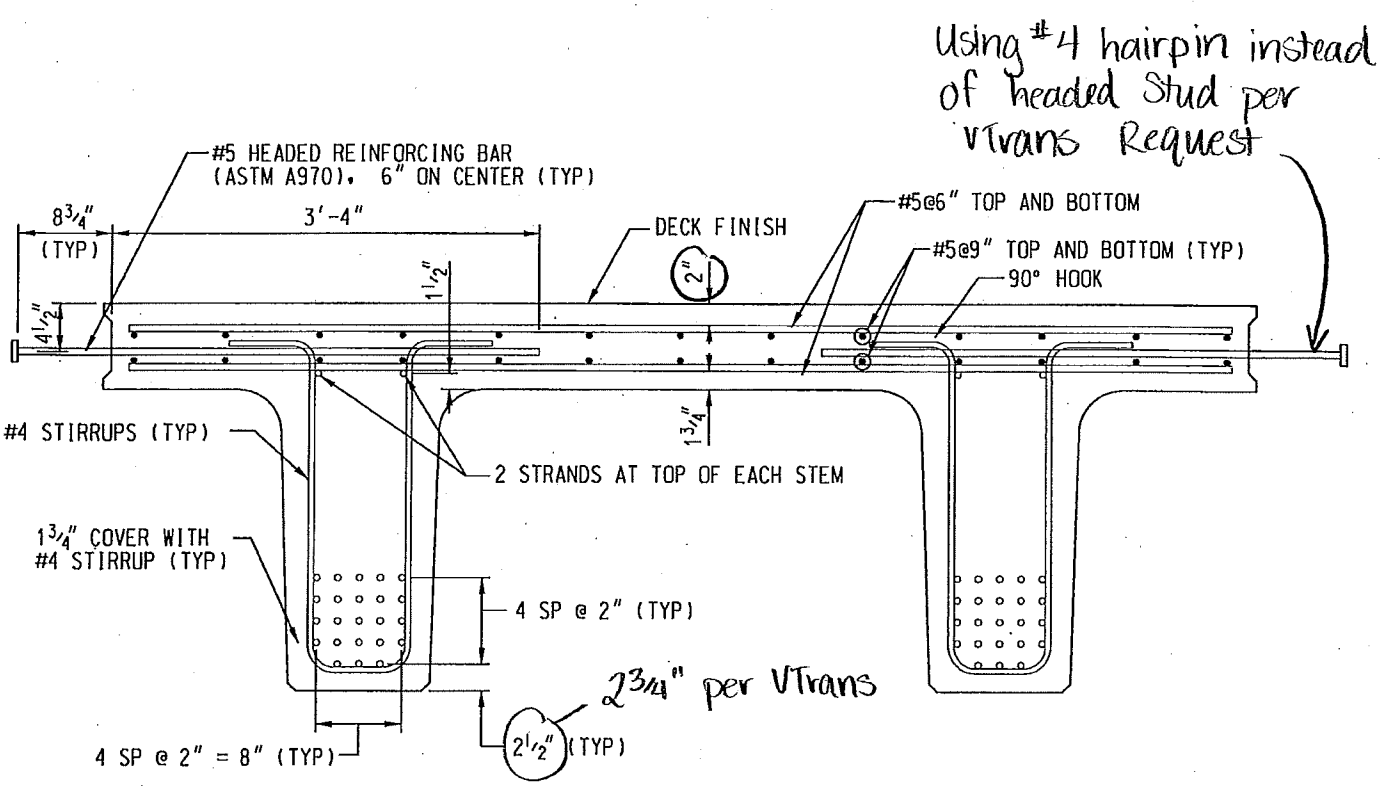

TYPICAL BEAM REINFORCING

DESIGN NOTES:

1. THE REINFORCING SHOWN IS BASED ON A PRELIMINARY DESIGN OF A 10 FOOT WIDE NEXT BEAM. DESIGNERS SHOULD VERIFY THIS REINFORCING FOR EACH DESIGN BASED ON THE AASHTO LRFD BRIDGE DESIGN SPECIFICATIONS OR STATE STANDARDS.
2. THE STRIP METHOD SPECIFIED IN AASHTO LRFD ARTICLE 4.6.2.1 IS RECOMMENDED FOR THE DESIGN.
3. THE HEADED REINFORCING BARS SHOWN SHOULD BE DESIGNED TO RESIST THE POSITIVE BENDING MOMENT AT THE CENTER OF THE JOINT AS SPECIFIED BY AASHTO. THE NESTED HEADED BARS CAN BE CONSIDERED A LAP SPLICE WITH THE BARS FULLY DEVELOPED.
5. THE CRACK CONTROL PROVISIONS OF AASHTO ARTICLE 5.7.3.4. SHOULD ALSO BE CHECKED.
6. ADDITIONAL REINFORCEMENT MAY BE REQUIRED FOR DECK OVERHANGS AND BARRIERS.

NOTES:

1. THE TOP FLANGE IS INTENDED TO ACT AS A STRUCTURAL DECK.
2. SHEAR REINFORCING SHOULD BE KEPT TO #4 BARS IN ORDER TO MAXIMIZE THE COVER ON THE SIDE OF THE STEM.
3. SEE SHEET D-11 FOR UTILITY SUPPORT DETAILS.
4. MINOR ADJUSTMENT OF THE SPACING OF THE TOP LONGITUDINAL REINFORCEMENT IS ALLOWABLE TO FACILITATE THE INSTALLATION OF THE STIRRUPS.

REVISIONS

NO.	DATE	DESCRIPTION
1	1/10	MODIFIED LOCATION OF TOP 4 STRAND
2	4/11	ADDED DESIGN NOTES
3	6/12	CHANGED HEADED BAR EXTENSION

NORTHEAST EXTREME BRIDGE TEE
NEXT D BEAMS

TYPICAL BEAM SECTION

ISSUE DATE: 01-04-10

SHEET: NEXT D -02

PRECAST/PRESTRESSED CONCRETE INSTITUTE NORTHEAST

PCI WWW.PCINE.ORG

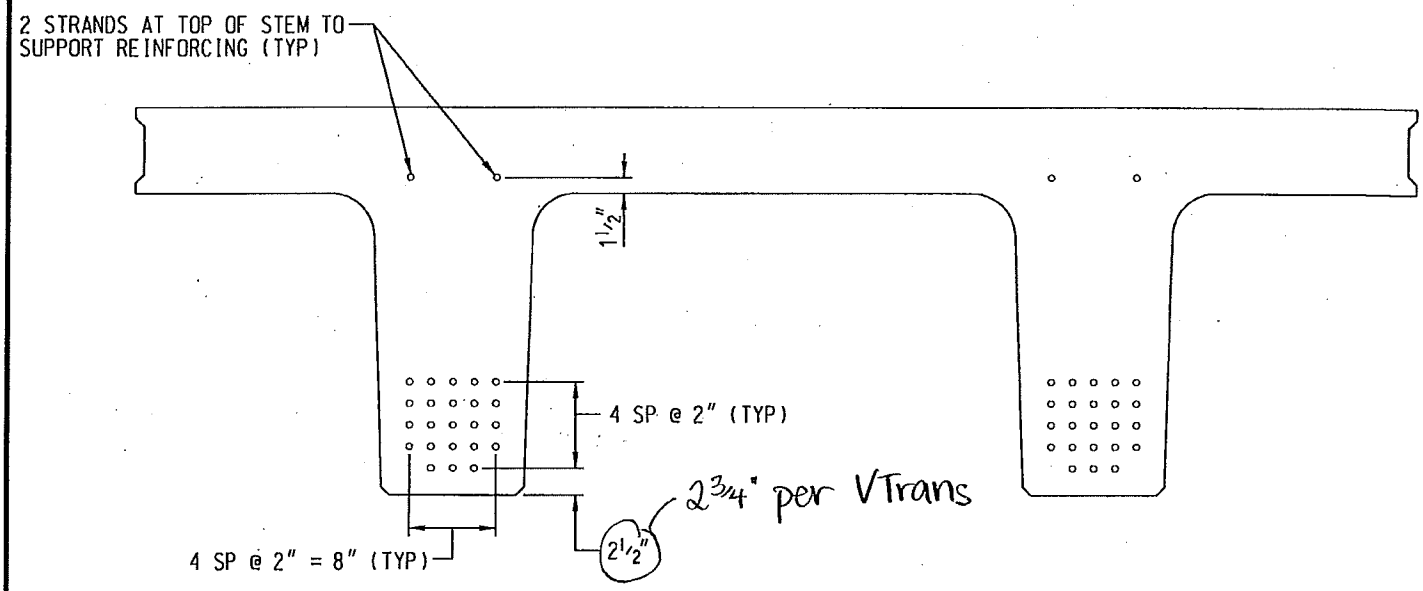

TYPICAL STRAND LOCATIONS

(ENDS AND ALONG THE SPAN)

NOTES:

1. ∘ DENOTES STRAIGHT STRAND. DRAPED STRANDS ARE NOT PERMITTED.
2. DEBONDING OF STRAND IS ALLOWED. NO MORE THAN 25% OF THE TOTAL NUMBER OF STRANDS SHALL BE DEBONDED. THE SPACING BETWEEN DEBONDED STRANDS SHALL BE AT LEAST 2.5 INCHES IN ANY DIRECTION. THE RESTRICTIONS OUTLINED IN THE AASHTO LRFD BRIDGE DESIGN SPECIFICATIONS SHALL ALSO BE FOLLOWED.
3. IT IS RECOMMENDED THAT APPROXIMATELY 50% OF ALL STRAND BE DEBONDED FOR THE FIRST 6" FROM THE END OF THE BEAM IN ORDER TO CONTROL END CRACKING. SPACING RESTRICTIONS OUTLINED IN NOTE 2 DO NOT APPLY TO THIS 6" AREA, BUT DO APPLY BEYOND THIS 6" AREA.
4. STRANDS SHALL BE PLACED WITHIN THE 2"x2" GRID. THE PATTERN MAY BE RAISED IN 2" INCREMENTS FOR DESIGNS THAT REQUIRE PRESTRESS AT A HIGHER ELEVATION. THE NUMBER AND LOCATION OF STRANDS SHALL BE AS REQUIRED BY DESIGN.
5. THE PATTERN SHOWN DEPICTS THE MAXIMUM NUMBER OF STRANDS ALLOWED (50 STRAND INCLUDING THE TOP STRAND). THIS IS BASED ON THE CAPACITY OF TYPICAL CASTING BEDS.
6. THE TWO BOTTOM CORNER STRAND IN EACH STEM ARE OMITTED TO PROVIDE ROOM FOR THE SHEAR REINFORCEMENT BAR BENDS.
7. ALL PRESTRESSING STRAND SHALL BE 0.6" DIAMETER, UNCOATED SEVEN WIRE, LOW RELAXATION STRANDS CONFORMING TO AASHTO M203. THE ULTIMATE STRENGTH OF THE STRANDS SHALL BE 270 KSI.
8. ADDITIONAL STRAND TENSIONED TO A NOMINAL VALUE MAY BE ADDED TO THE TOP FLANGE TO SUPPORT THE TOP FLANGE REINFORCING.

REVISIONS

NO.	DATE	DESCRIPTION
1	1/10	MODIFIED LOCATION OF TOP 4 STRAND

NORTHEAST EXTREME BRIDGE TEE
NEXT D BEAMS

TYPICAL STRAND LOCATIONS

ISSUE DATE: 01-04-10

SHEET: NEXT D – 03

PRECAST/PRESTRESSED CONCRETE INSTITUTE NORTHEAST

PCI WWW.PCINE.ORG

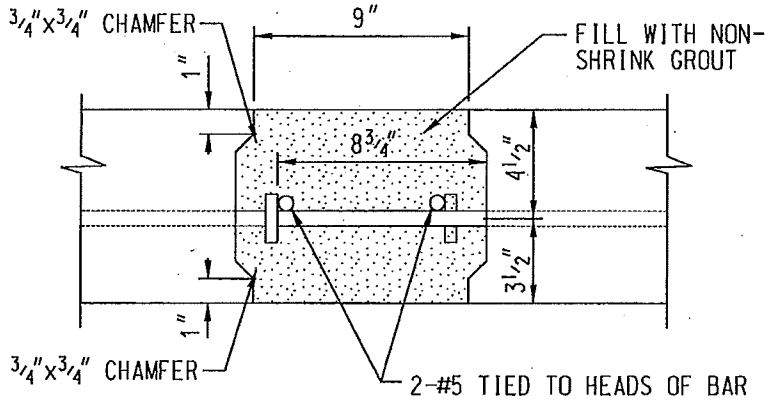

SECTION

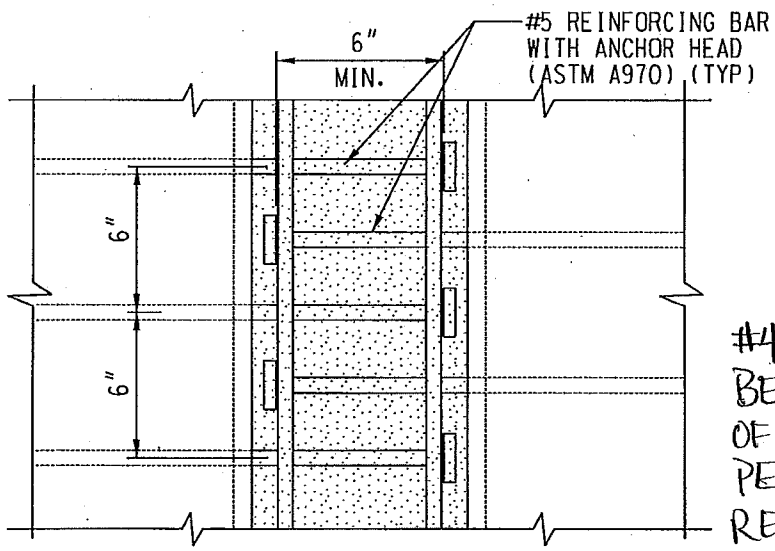

#4 HAIRPINS WILL BE USED INSTEAD OF HEADED STUDS PER VTRANS REQUEST.

PLAN

FLANGE CONNECTOR DETAILS

NOTES:
1. CONNECTOR REINFORCING TO BE PLACED ALONG THE ENTIRE SPAN WITH 6" SPACING.
2. FOR SKEWED BRIDGES, PLACE CONNECTOR REINFORCING PERPENDICULAR TO BEAM EDGE. BEND CONNECTOR REINFORCING WITHIN THE FLANGE IN ACUTE CORNERS TO PRODUCE A SQUARE PROJECTION.
3. METHOD OF FORMING CLOSURE POUR TO BE DETERMINED BY THE CONTRACTOR. THE FORMS NEEDS TO BE REMOVABLE AND ABLE TO ACCOMMODATE DIFFERENTIAL CAMBER. FORM SUPPORTS SHOULD NOT PENETRATE THROUGH TOP OF POUR UNLESS APPROVED BY THE ENGINEER.
4. CLOSURE POUR MATERIAL TO BE A NON SHRINK MIX THAT HAS A MINIMUM COMPRESSIVE STRENGTH OF 7000 PSI. THE GROUT MAY BE EXTENDED WITH AGGREGATE.
5. SAND BLASTING OF THE FACES OF THE KEYS JUST PRIOR TO INSTALLATION IS RECOMMENDED TO IMPROVE GROUT BOND.
6. DESIGNERS ARE RESPONSIBLE FOR THE VERIFICATION OF THE DESIGN OF THIS JOINT. THIS DETAIL CAN BE CONSIDERED EQUIVALENT TO A TENSION LAP SPILCE. IF MORE MOMENT CAPACITY IS REQUIRED, THE LOCATION OF THE BAR MAY BE LOWERED. SEE SHEET 02 FOR INFORMATION ON THE DESIGN OF THIS JOINT.

REVISIONS

NO.	DATE	DESCRIPTION
1	4/11	ADDED NOTE 6
2	6/12	CHANGED WIDTH OF JOINT AND BAR EXTENSIONS

NORTHEAST EXTREME BRIDGE TEE
NEXT D BEAMS

BEAM CONNECTOR DETAILS

ISSUE DATE: 01-04-10

SHEET: NEXT D - 04

PRECAST/PRESTRESSED CONCRETE INSTITUTE NORTHEAST

PCI WWW.PCINE.ORG

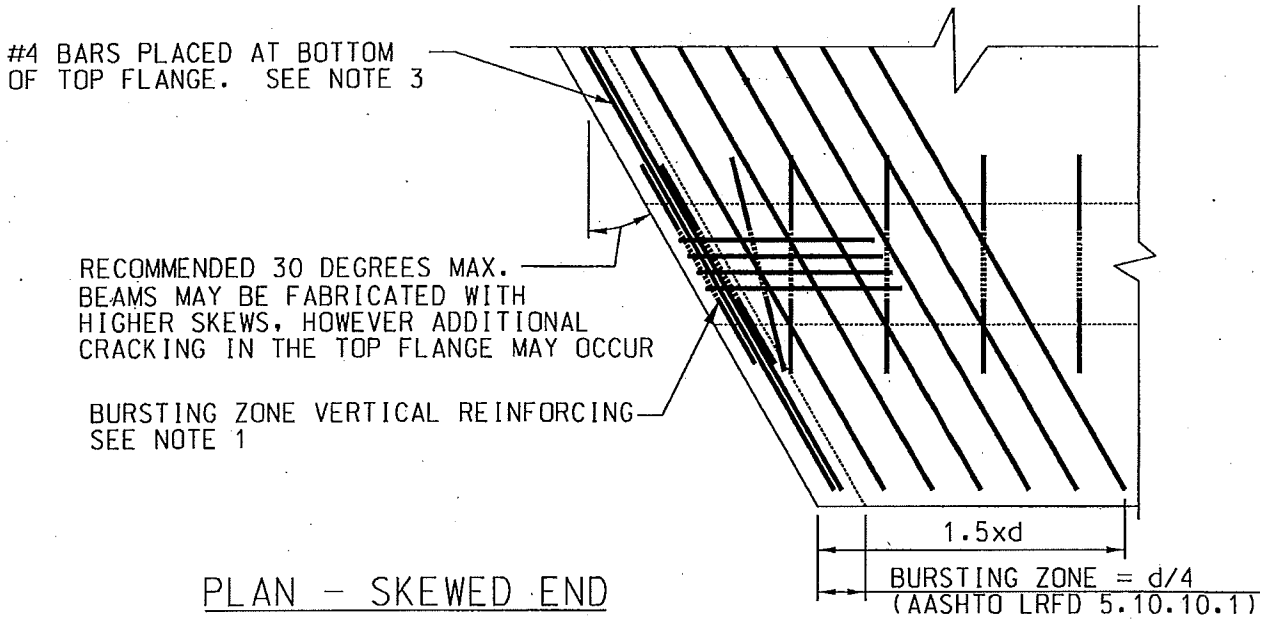

PLAN - SKEWED END

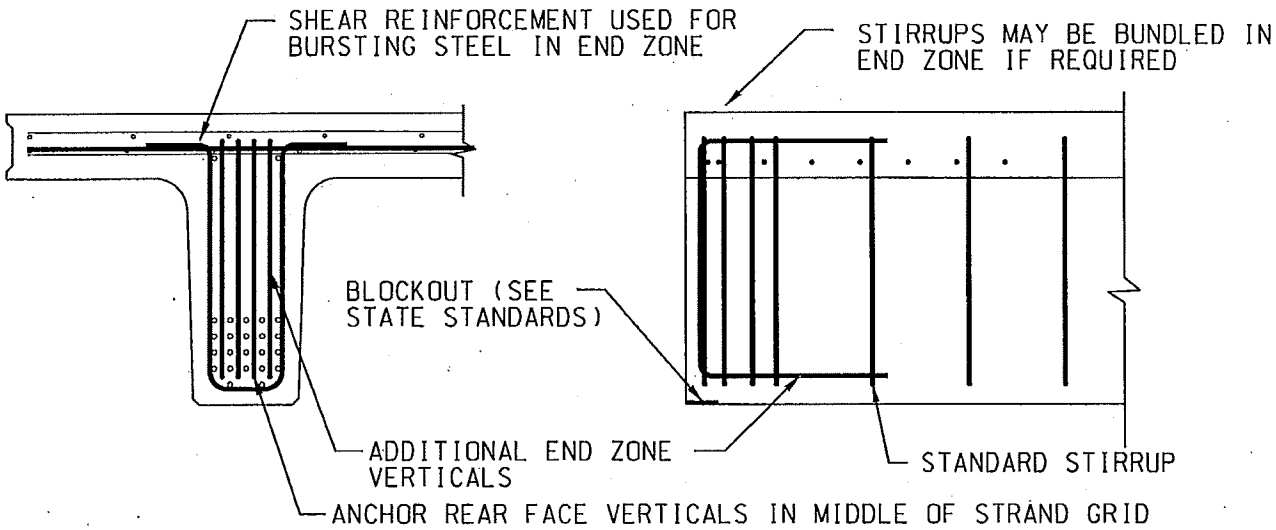

END ELEVATION - STEM END

ELEVATION - STEM END

BEAM END REINFORCING DETAILS

NOTES:

1. THE BARS SHOWN ARE APPROXIMATELY THE MAXIMUM NUMBER THAT CAN BE FIT WITHIN THE NEXT 28 D BEAM. SOME OR ALL OF THESE ADDITIONAL END VERTICAL BARS MAY NOT BE NECESSARY DEPENDING ON THE DESIGN.

2. THE AMOUNT OF SPLITTING REINFORCING MAY BE REDUCED BY DEBONDING STRAND IN THIS AREA. ADDITIONAL SPLITTING REINFORCING SHOULD BE PLACED IN AREAS WHERE DEBONDING IS TERMINATED.

3. PLACE 2-#4 BARS AT THE BEAM END, THEN #4 @ 6 INCHES IN THE TOP FLANGE TO MINIMIZE THE POTENTIAL FOR TOP FLANGE END CRACKING DURING RELEASE AND HANDLING. THE MOST COMMON FORM OF POTENTIAL CRACKING IN THIS AREA IS A SERIES OF VERTICAL HAIRLINE CRACKS THROUGH THE INSIDE RADIUS OF THE TOP FLANGE / BEAM STEM INTERFACE RUNNING PARALLEL TO THE STEM.

REVISIONS		
NO.	DATE	DESCRIPTION

NORTHEAST EXTREME BRIDGE TEE
NEXT D BEAMS

BEAM END DETAILS

ISSUE DATE: 01-04-10

SHEET: NEXT D - 05

PRECAST/PRESTRESSED CONCRETE INSTITUTE NORTHEAST

PCI WWW.PCINE.ORG

VHB *Computations*

Project: BRIDGE 93 | Project # 57632.00
Location: CASTLETON, VT | Sheet of
Calculated by: EAF | Date: 1/20/14
Checked by: KBR | Date: 4/10/14
Title NEXT Beam Information

NEXT 28D BEAM

$f'_c = 10$ ksi
$f'_{ci} = 7.5$ ksi per VSM 5.1.1.6 (can be up to 80% of f'_c) using 75% ↑

$w_c = 0.150$ kcf

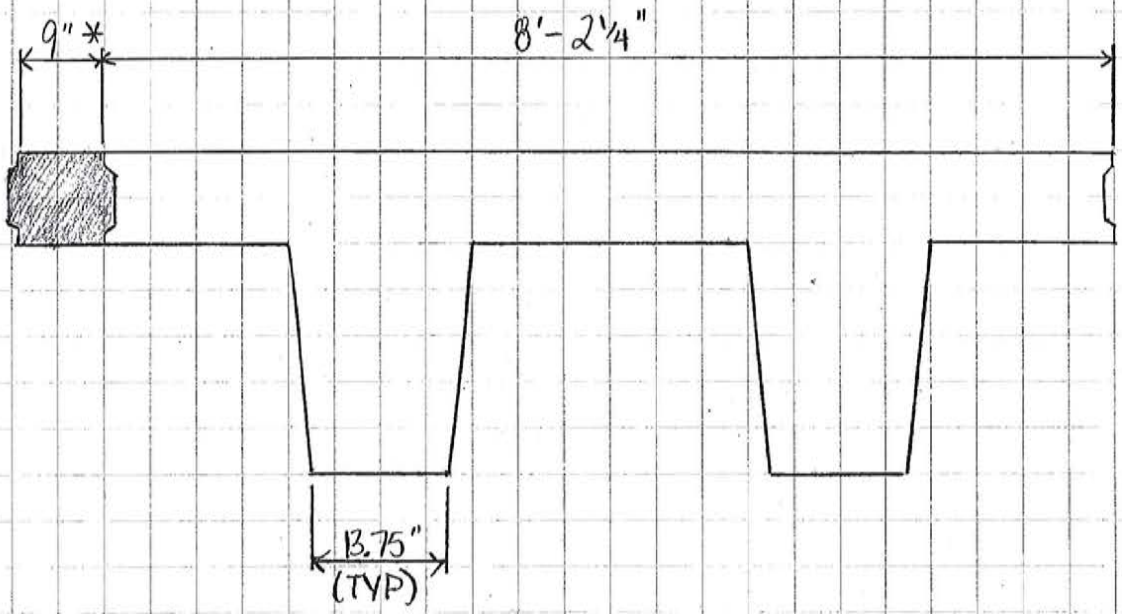

* Flange connector detail at interior beam and at exterior beams (not on fascia).

VHB Computations

Project: BRIDGE 93 | Project # 57632.00
Location: CASTLETON, VT | Sheet of
Calculated by: EAF | Date: 1/20/14
Checked by: KBR | Date: 4/10/14
Title

STRAND LAYOUT:

- Per PCI Design Standards, first row of strands must be 2½" from the bottom of the unit.
  - Per VTrans 2004 SM, use 2¾"
- Strands to be used: 6" dia. 270 Ksi uncoated wire, low relaxation conforming to AASHTO M203

DEBONDING REQUIREMENTS:

1. Total amount of strands debonded ≤ 25% of total strands (NOT INCLUDING 6" DEBONDING)
2. Total amount of strands debonded per row < 40% of total strands in row.
3. No strands that are on exterior shall be debonded.
4. Recommended to debond 50% of total strands only at 6" from end.
5. Debonding must be symmetrical.

* All ties & stirrups will be epoxy coated (VSM 5.3.11)

VHB *Computations*

Project: Bridge 93 | Project # 57632.00
Location: Castleton, VT | Sheet of
Calculated by: | Date: 8/18/14
Checked by: | Date:
Title Bursting Steel Requirements

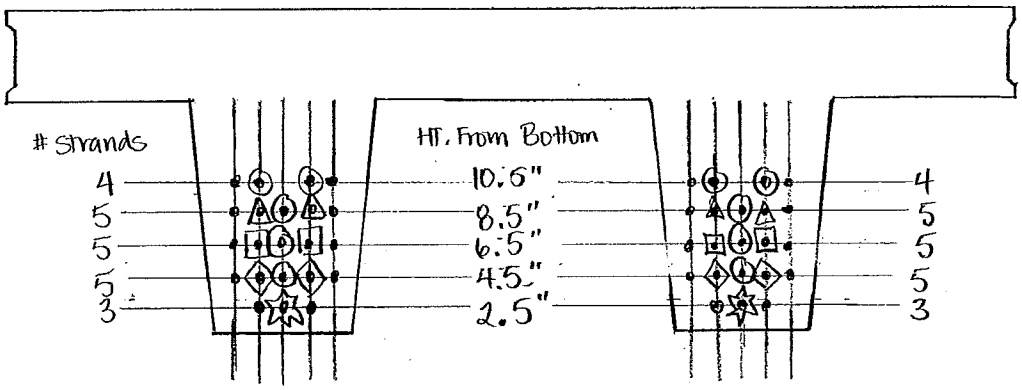

Debonding Length:
○ = 6"
△ = 4'-0"
□ = 6'-0"
◇ = 8'-0"
☆ = 10'-0"

Total Strands = 44

INTERIOR & EXTERIOR BEAMS
NOT TO SCALE

At beam ends required area of steel = 2.64 in² (per conspan)

Must place strands symmetrical per stem
Try #6, Area = 0.44 in²
2.64/0.44 = 6 ⇒ 8 vertical end bars, 4 per stem

Does debonding meet requirements?
1- Amt. debonded = 14 strands ≤ [0.25(44) = 11], say OK
2- 40% of row (max): 4 strands out of 10, OK ✓
3- No exterior strands debonded OK ✓
4- 50% debonded @ 6": 2(5) = 20 strands ≤ 50%(44) OK ✓
5- Debonding must be symmetrical OK ✓

VHB *Computations*

Project: Bridge #93 Project # 57632.00
Location: Castleton, VT Sheet of
Calculated by: EAF Date: 1/30/14
Checked by: KBR Date: 4/10/14
Title Reinforcing Layout

Reinforcing Layout for Interior & Exterior Beams:

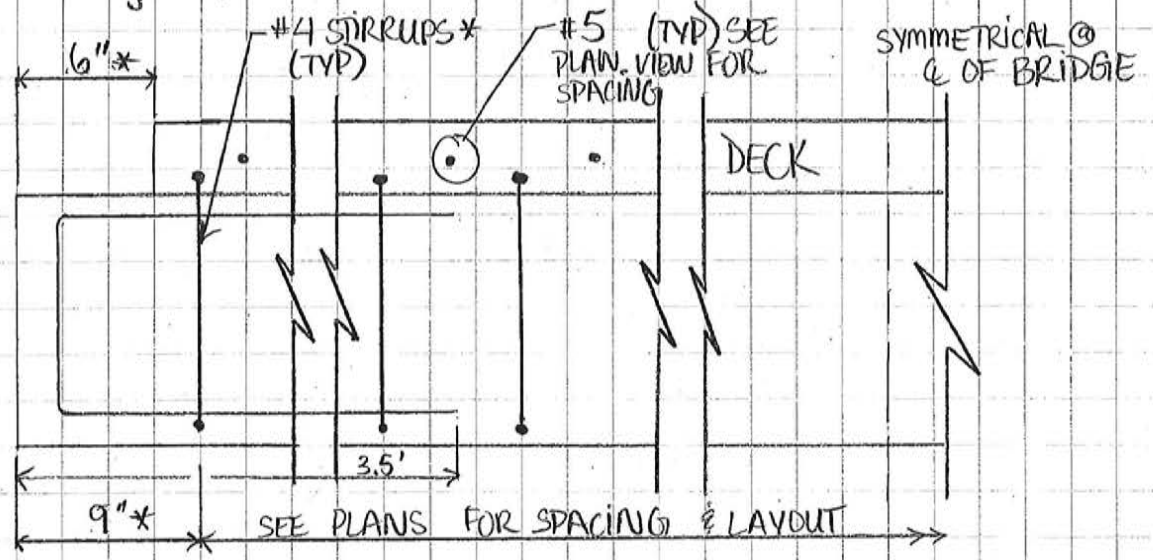

*-DIMENSIONS NORMAL TO SKEW

ELEVATION VIEW
NTS
(DECK STEEL NOT SHOWN)

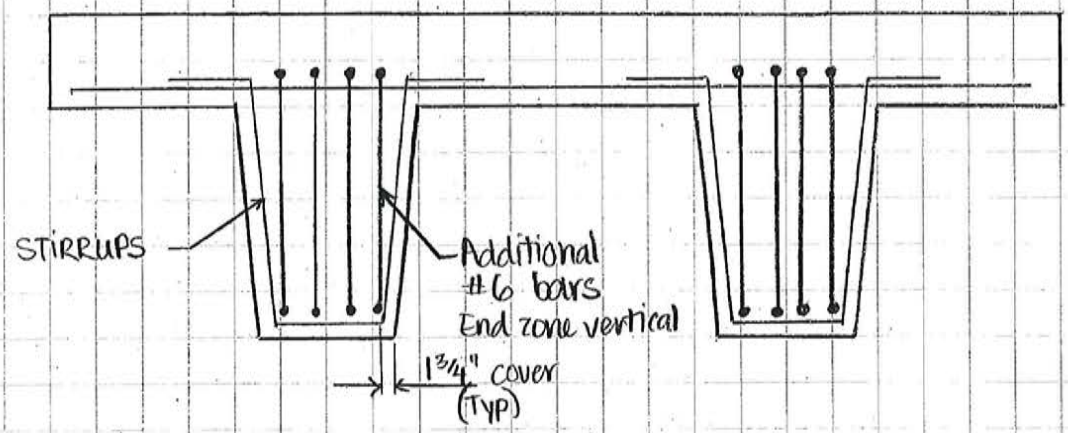

SECTION VIEW
NTS

VHB *Computations*

Project: Br #93 | Project # 57632.00
Location: Castleton, VT | Sheet of
Calculated by: EAF | Date: 4/21/14
Checked by: | Date:
Title Deck Reinforcing Layout

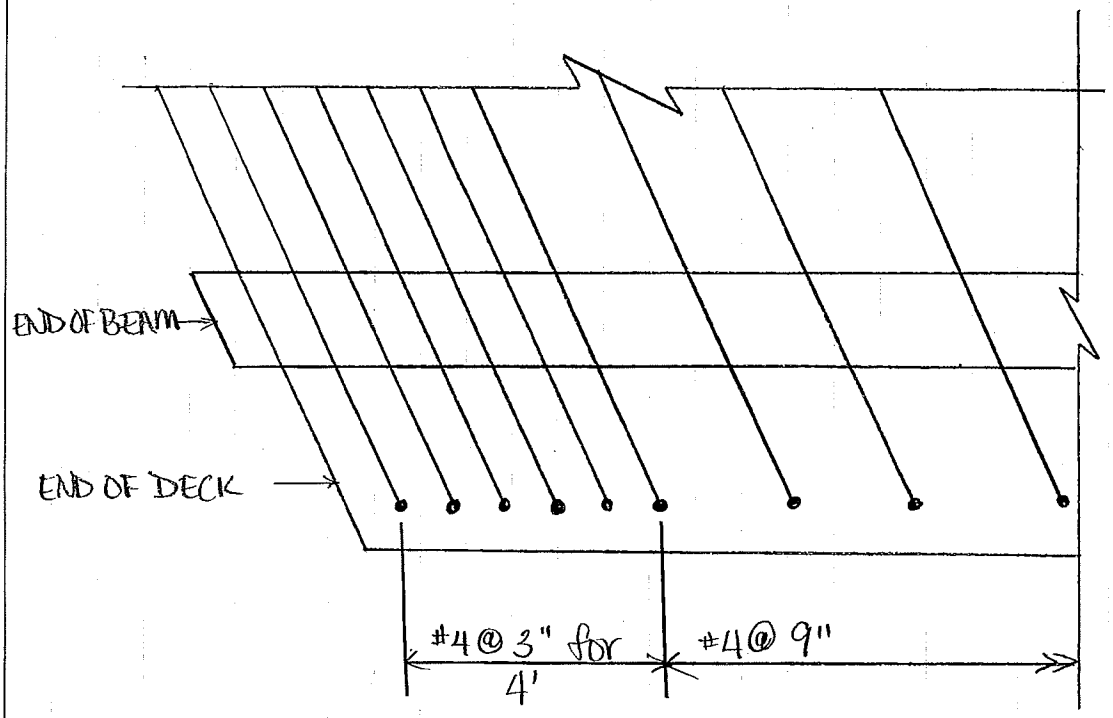

PLAN VIEW

Stirrup Spacing:

Interior Beams = #4 @ 3" for 0-4' (both ends), #4 @ 9" middle
Exterior Beams = #4 @ 3" for 0-4' (both ends), #4 @ 9" middle

Top Steel:

Interior Beams = (11)-#5 from 6" into beam till 6" from end
Exterior Beams = (11)-#5 from 6" into beam till 6" from end.

Section 2.2

Conspan Inputs

VHB *Computations*

Project: BRIDGE 93 | Project # 57632.00
Location: CASTLETON, VT | Sheet of
Calculated by: EAF | Date: 1/20/14
Checked by: KBR | Date: 4/10/14
Title Beam Design

- Design beam with 3" overlay (DW) & 3/4" camber tolerance initially
- Skew angle = 18°
- ℄ Brg to ℄ Brg = 67'-3 5/8" ≃ 67.2990'
- Length of Beams = 68'-4 1/4" ≃ 68.35'

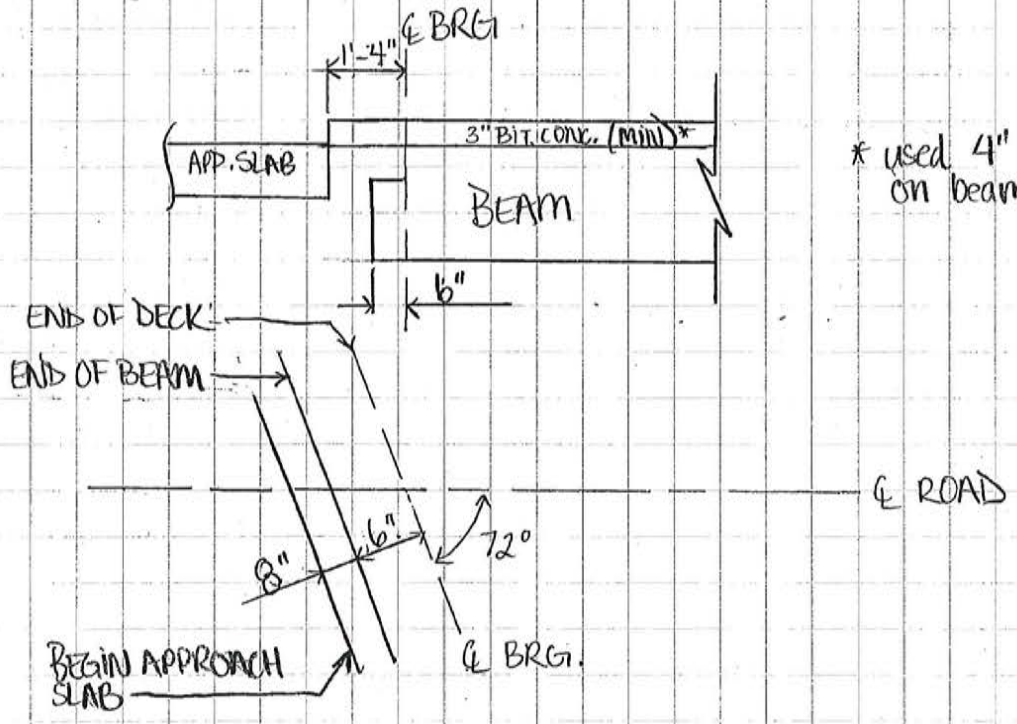

* used 4" for calc load on beams

- $N_b = 4$

VHB *Computations*

Project: BRIDGE 93 | Project # 57632.00
Location: CASTLETON, VT | Sheet of
Calculated by: EAF | Date: 1/20/14
Checked by: KBR | Date: 4/10/14
Title LOAD CALCS

DEAD LOAD CALCS (NEXT 28D):

- PRECAST DC: Beam self weight is calculated by CON-SPAN. On exterior beams, curb will be precast with beam:

  - Concrete Curb: $(2' \text{ wide})\left(\frac{7''+3''}{12} \text{ height}\right)(150\ ^{lb}/_{ft^3}) = \underline{0.250\ Klf}$ per ext. beam

  - Concrete Joints: $\frac{(9'' \times 8'')}{144}(150\ ^{lb}/_{ft^3}) = \underline{0.075\ Kips/ft}$ /beam

- COMPOSITE DC:

  - 2 Rail Box Beam: Assume exterior beams carry 100% of rail and curb load. (VTrans Standard S360 A)

    Top railing: HSS $8 \times 4 \times 5/16''$ = 23.32 lb/ft
    Bottom railing: HSS $4 \times 4 \times 1/4''$ = 12.18 lb/ft } Per AISC

    Posts Spaced @ 7.4167', 27" H & 25 lb/ft $= (25\ ^{lb}/_{ft})\left(\frac{27''}{12}\right)(7.4167) = \frac{417.2\ lb}{66.77'}$

    $= 6.25\ ^{lb}/_{ft}$

    Add in 5% for connections:

    Total Weight $= (6.25 + 12.18 + 23.32)(1.05) = 43.84\ ^{lb}/_{ft} = 0.044\ ^{K}/_{ft}/beam$
    $\times 2$ FASCIAS $= \underline{0.088\ ^{K}/_{ft}}$

  - Snow Barrier: Assume exterior beams carry 100% of snow barrier.

    9 Gauge Steel Mesh (2"), 3' high = 2.10 plf
    1¼" DIA. Steel Pipe = 1.68 plf
    2" DIA. END POST = 3.5 plf

Project: BRIDGE 93 | Project # 57632.00
Location: Castleton, VT | Sheet of
Calculated by: EAF | Date: 1/20/14
Checked by: KBR | Date: 4/10/14
Title LOAD CALCS

DEAD LOADS (cont'd):

Snow Barrier (cont'd):
for 2" dia. end posts –
10' maximum post spacing: $\frac{51.917\ LF}{10} = 6$ posts needed

$$\frac{6\ \text{posts}\,(3'\ \text{high})(3.5\ \text{plf})}{51.917'} = 1.213\ \text{plf}$$

Total Weight of snow barrier (include 10% for plates & connections):

$(2.10 + 2 * 1.68 + 1.213)(1.10) = 7.34 \Rightarrow 0.007$ K/ft/beam
*Only for 51'-11": $\frac{0.007/(51'-11")}{67.30'} \times 2$ FASCIA $= 0.011$ K/ft

DW
▸ 3" Wearing surface with membrane waterproofing = 0.038 Ksf

3" WS = 0.038 Ksf (31.0') = 1.178 Klf/beam

Calc additional tolerance $\left(\frac{3/4"}{12}\right) \times 31.0' \times 0.150 = 0.291$ Klf

$\Sigma_{DW} = 1.469$ Klf (total)

used 1.55 Klf in conspan for pavement needed for camber (see next sheet)

VHB *Computations*

Project: Br #93 Project # 57632.00
Location: Castleton, VT Sheet of
Calculated by: Date: 1/24/14
Checked by: KBR Date: 4/10/14
Title Additional Load for Pavement Height

- From Camber/Curb height spreadsheet - add additional loading assuming 4" pavement depth instead of 3" pavement depth (this will be conservative assuming 4" depth is at end of beam and 3" depth is at center of beam)

<u>Concrete Curb</u> for 3" pavement = 0.250 Klf per ext. beam

$$0.250 \text{ Klf} + \left[(2' \text{ wide})\left(\tfrac{1''}{12} \text{ height}\right)\left(150 \tfrac{lb}{ft^3}\right)\right] = \underline{0.275 \text{ Klf}}$$

<u>DW</u> for 3" pavement = 1.178 Klf/beam

for 4": $+\left[\left(\frac{4}{12}\right) * \left(150 \text{ lb/ft}^3\right)(1 \text{ ft}) * (31.0')\right] = \underline{\underline{1.550 \text{ Klf/beam}}}$

Transportation
Land Development
Environmental
Services

VHB *Vanasse Hangen Brustlin, Inc.*

Computations

Project	Bridge #93	Project #	57632.00
Location	Castleton, VT	Sheet	
Calculated by	EAF	Date	1/21/14
Checked by	KBR	Date	4/10/14
Title	Section Properties for Beams @ precast		

Section Properties for Beams @ precast

Note: 9" wide longitudinal joint at both sides of interior beam and at inside facing sides of exterior beams. 9" additional length not included in beam analysis to be conservative. Longitudinal joint analyzed separately.

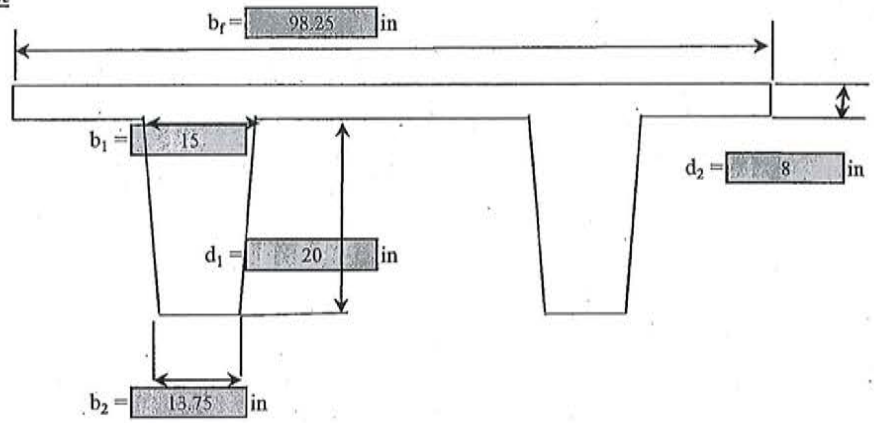

Rectangular Properties

$A_{rectangle} = b_f * d_2$

$A_{rectangle}$ = 786.00 in^2

$\hat{y}_{rectangle} = d_1 + d_2/2$

$\hat{y}_{rectangle}$ = 24.00 in from bottom

$I_{rectangle} = \frac{b_f * d_2^3}{12}$

$I_{rectangle}$ = 4192.00 in^4

Trapezoid Properties (for two stems)

$A_{trapezoid} = 2(d_1 * \frac{b_1 + b_2}{2})$

$A_{trapezoid}$ = 575 in^2

$\hat{y}_{trapezoid} = \frac{d_1(2b_2 + b_1)}{3(b_2 + b_1)}$

$\hat{y}_{trapezoid}$ = 9.86 in from top

$\hat{y}_{trapezoid}$ = 10.14 in from bottom

$I_{trapezoid} = 2 * (\frac{d_1^3(b_2^2 + (4 * b_2 * b_1) + b_1^2)}{36(b_1 + b_2)})$

$I_{trapezoid}$ = 19155 in^4

Beam Properties

A_{beam} = 1361.00 in^2

$\bar{y} = \frac{\Sigma \hat{y} A}{\Sigma A}$

$\bar{y}$ = 18.15 in

$I_{beam} = I_{trapezoid} + A_{trapezoid}(\bar{y} - \hat{y}_{trapezoid})^2 + I_{rectangle} + A_{rectangle}(\bar{y} - \hat{y}_{rectangle})^2$

I_{beam} = 87,092 in^4

$S_{beam} = \frac{I_{beam}}{\bar{y}}$

S_{beam} = 4,799 in^3

Project: BR.93 Project # 57632.00
Location: CASTLETON, VT Sheet of
Calculated by: EAF Date: 1/20/14
Checked by: KBR Date: 4/10/14
Title

LIVE LOAD CALCULATIONS:

$$\# \text{Lanes} = \frac{(31.0')}{11'} = 2.82 \rightarrow \underline{2 \text{ LANES}}$$

HL-93 ⇒ Requires design truck & design lane load or design tandem and design lane

LANE LOAD = 0.640 KIF (AASHTO 3.6.1.2.4)

Design Truck:

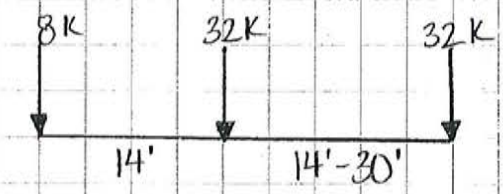

(AASHTO 3.6.1.2.2)

Dynamic Load Allowance (IM) = 33% (3.6.2-1)
(NOT applied to lane load)

Design Tandem = A pair of 25K axles spaced 4' apart (3.6.1.2.3)

* AASHTO LRFD 3.6.1.1.1 - When traffic lanes are less than 12';
# Design Lanes = # Traffic Lanes

VHB **Computations**

67.3' Span

Project:	Br. #93	Project #	57632
Location:	Castleton, VT	Sheet:	___of___
Calculated by:	EAF	Date:	8/25/14
Checked by:	KBR	Date:	10/3/14
Title:	Live Load Distribution Factors		

Live Load Moment Distribution Factor for Interior Beams
(AASHTO LRFD Table 4.6.2.2.2b-1)

Next Beam Design Guidelines recommended using AASHTO LRFD cross-section type f

For Cross Section Type f: Input

For One Design Lane Loaded:

$$0.06 + \left(\frac{S}{14}\right)^{0.4}\left(\frac{S}{L}\right)^{0.3}\left(\frac{K_g}{12.0Lt_s^{\,3}}\right)^{0.1}$$

For Two or More Design Lanes Loaded:

$$0.075 + \left(\frac{S}{9.5}\right)^{0.6}\left(\frac{S}{L}\right)^{0.2}\left(\frac{K_g}{12.0Lt_s^{\,3}}\right)^{0.1}$$

Range of Applicability

$3.5 \le S \le 16$

$20 \le L \le 240$

$4.5 \le t_s \le 12.0$

$N_b \ge 4$

$10{,}000 \le K_g \le 7{,}000{,}000$

Variables:

Note : Use CL brg to CL brg for span length

8.9375	S	spacing of beams (ft)	
67.3	L	span of beam (ft)	
8	t_s	depth of concrete slab (in)	
20	d	depth of beam (in) (for 2 stems only)	
8	N_b	number of beams **(2 stems per beam = "8")**	
10	$f'c_b$	compressive strength of concrete (beam)(ksi)	
10	$f'c_d$	compressive strength of concrete (deck)(ksi)	(Vtrans Structures Manual)
6062	E_B	modulus of elasticity of beam material (ksi)	(AASHTO LRFD C5.4.2.4-1)
6062	E_D	modulus of elasticity of deck material (ksi)	(AASHTO LRFD C5.4.2.4-1)
1.000	n	modular ratio E_B/E_D	
19155	I	moment of inertia of beam (in^4) (for 2 stems only)	
575	A	Area of beam (in^2) (for 2 stems only)	
10.14	cg_b	center of gravity of beam from the bottom of beam (in)	(for 2 stems only)
4	cg_d	center of gravity of deck (in)	
13.855072	e_g	distance between centers of gravity of the beam and deck (in)	
129,533	K_g	longitudinal stiffness parameter	

$$K_g = n\left(I + Ae_g^2\right)$$

For One Design Lane Loaded:

DF = 0.466

For Two or More Design Lanes Loaded:

DF = 0.648

VHB **Computations**

Project:	Br. #93	Project #	57632
Location:	Castleton, VT	Sheet:	___of___
Calculated by:	EAF	Date:	8/25/14
Checked by:	KBR	Date:	10/3/14
Title:	Live Load Distribution Factors		

67.3' Span

Live Load Moment Distribution Factor for Exterior Beams
(AASHTO LRFD Table 4.6.2.2.2d-1)

Next Beam Design Guidelines recommended using AASHTO LRFD cross-section type i
Skew correction coefficient is 1 per AASHTO LRFD Table 4.6.2.2.2e-1 therefore can be neglected

For Cross Section Type i: Input

For One Design Lane Loaded:

Lever Rule: (See Lever Rule Sheet)

Range of Applicability

$$-1.0 \le d_e \le 5.5$$

For Two or More Design Lanes Loaded:

$g = eg_{interior}$

$$e = 0.77 + \frac{d_e}{9.1}$$

Variables:

-0.406	d_e	horizontal distance from the centerline of the exterior web of exterior beam at deck level to the interior edge of curb or traffic barrier (ft) (4.6.2.2.2d)
0.725	e	correction factor

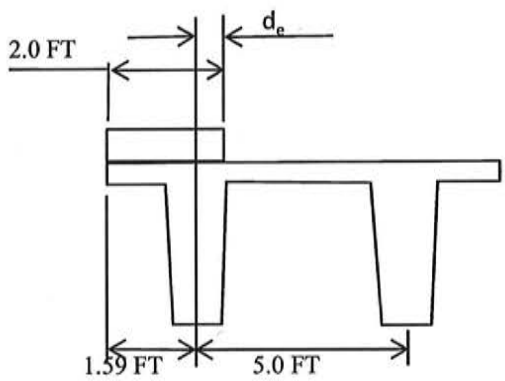

For One Design Lane Loaded:
DF = 0.809 **(See Lever Rule Sheet)**

For Two or More Design Lanes Loaded:
DF = 0.489 **(See Lever Rule Sheet)**

VHB **Computations**

67.3' Span

Project:	Br. #93	Project #	57632
Location:	Castleton, VT	Sheet:	___of___
Calculated by:	EAF	Date:	8/25/14
Checked by:	KBR	Date:	10/3/14
Title:	Correction Factor for Skew		

Correction Factor for Skew

(AASHTO LRFD Table 4.6.2.2.3b-1)

Rating Guidelines recommended using AASHTO LRFD cross-section type a

Correction Factor for Skew is applied to shear distribution factors only

For Cross Section Type I: Input

Correction Factor for Skewed Bridge (ASSHTO LRFD Table 4.6.2.2.3c-1)

$$K_g = n\left(I + Ae_g^2\right)$$

$$CF = 1 + 0.2\left(\frac{12.0Lt_s^{\ 3}}{K_g}\right)^{0.3} \tan\theta$$

Range of Applicability

$3.5 \le S \le 16$

$20 \le L \le 240$

$0° \le \theta \le 60°$

$N_b \ge 4$

Variables:

67.3	L	span of beam (ft)	
18	θ	bridge skew (degrees)	
8	t_s	depth of concrete slab (in)	
20	d	depth of beam (in)	(stem only)
1.000	n	modular ratio E_B/E_D	**f'c may change but n will always = 1**
19154.589	I	moment of inertia of beam (in^4)	(for 2 stems only)
575	A	Area of beam (in^2)	(for 2 stems only)
10.144928	cg_b	center of gravity of beam from the bottom of beam (in)	(for 2 stems only)
4	cg_d	center of gravity of deck (in)	
13.855072	e_g	distance between centers of gravity of the beam and deck (in)	
129,533	K_g	longitudinal stiffness parameter	

Skew Correction Factor

CF = 1.09

Note: Skew Correction Factor to be use to adjust Lever Rule distribution factors for 1 and 2 lanes only if CF > 1.

VHB **Computations**

Project:	Br. #93	Project #	57632
Location:	Castleton, VT	Sheet:	____of____
Calculated by:	EAF	Date:	8/25/14
Checked by:	KBR	Date:	10/3/14
Title:	Live Load Distribution Factors		

67.3' Span

Live Load Shear Distribution Factor for Interior Beams
(AASHTO LRFD Table 4.6.2.2.3a-1)

NEXT Beam Design Guideles recommended using AASHTO LRFD cross-sections type i

For Cross Section Type i:
For One Design Lane Loaded:

$$0.36 + \frac{S}{25}$$

For Two or More Design Lanes Loaded:

$$0.2 + \frac{S}{12} - \left(\frac{S}{35}\right)^2$$

Input

Range of Applicability

$3.5 \le S \le 16$
$20 \le L \le 240$
$4.5 \le t_s \le 12.0$
$N_b \ge 4$

Variables:

8.9375	S	spacing of beams (ft)
67.3	L	span of beam (ft)
8	t_s	depth of concrete slab (in)
20	d	depth of beam (in)
8	N_b	number of beams

***Note*: Use CL brg to CL brg for span length**

Correction Factor for Skewed Bridge (ASSHTO LRFD Table 4.6.2.2.3c-1) see previous sheet for calculation
CF = 1.09

For One Design Lane Loaded:
with CF for skew **DF = 0.784**

For Two or More Design Lanes Loaded:
with CF for skew **DF = 0.961**

VHB **Computations**

67.3' Span

Project:	Br. #93	Project #	57632
Location:	Castleton, VT	Sheet:	___of___
Calculated by:	EAF	Date:	8/25/14
Checked by:	KBR	Date:	10/3/14
Title:	Live Load Distribution Factors		

Live Load Shear Distribution Factor for Exterior Beams

(AASHTO LRFD Table 4.6.2.2.3b-1)

NEXT Beam Design Guideles recommended using AASHTO LRFD cross-sections type i

For Cross Section Type i:

Input

For One Design Lane Loaded:

Lever Rule: (See Lever Rule Sheet)

Range of Applicability

$$-1.0 \le d_e \le 5.5$$

For Two or More Design Lanes Loaded:

$g = eg_{interior}$

$$e = 0.6 + \frac{d_e}{10}$$

Variables:

-0.406	d_e	horizontal distance from the centerline of the exterior web of exterior beam at deck level to the interior edge of curb or traffic barrier (ft)
0.559	e	correction factor

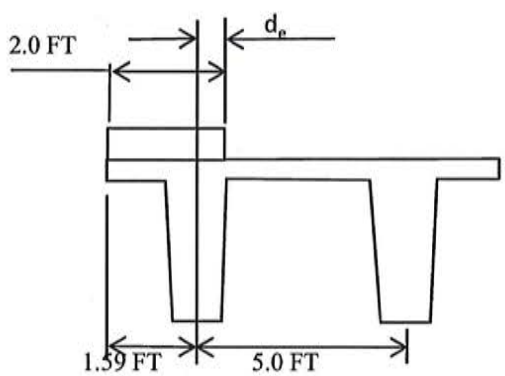

For One Design Lane Loaded:

DF = 0.884 **(See Lever Rule Sheet)**

For Two or More Design Lanes Loaded:

DF = 0.537

VHB **Computations**

67.3' Span

Project:	Br. #93	Project #	57632
Location:	Castleton, VT	Sheet:	___of___
Calculated by:	EAF	Date:	8/25/14
Checked by:	KBR	Date:	10/3/14
Title:	Live Load Distribution Factors		

Lever Rule (See example in AISI design example of steel highway bridges, Vol. II, Chap. 1A - page 1-7)

AASHTO LRFD 3.6.1.3 - place wheel load 2' from edge of design lane
Use lever rule for one design mlane for moment and shear in exterior beam.

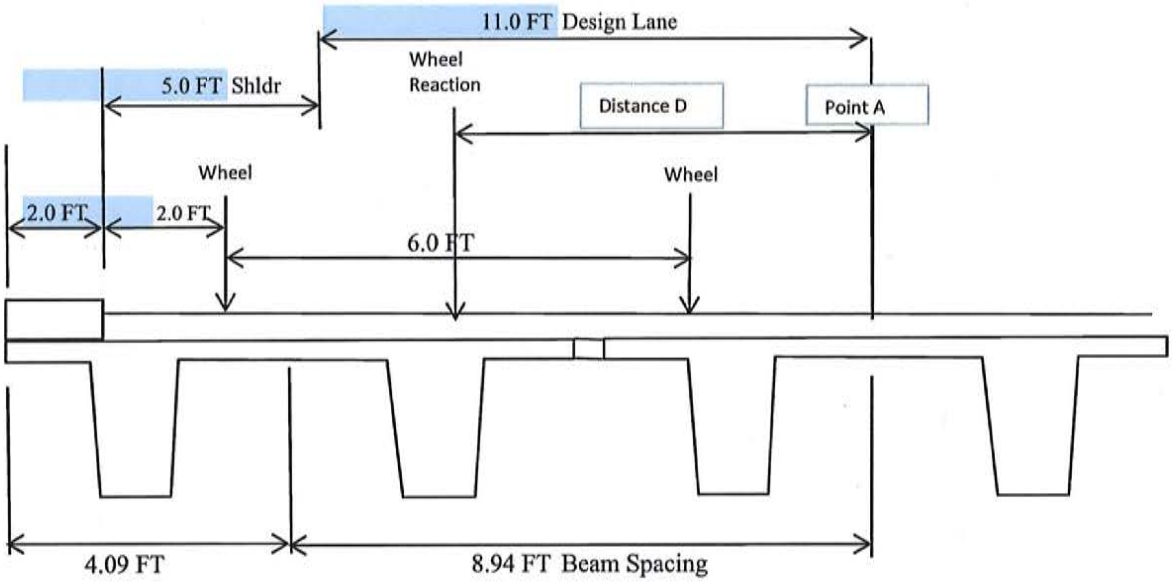

Overhang = 0 in
Find Moment about Point A (center of first interior beam)

Distance D = 8.94' + 4.09' - ((2'-0") + (2'-0") - (6'-0"/2) = 6.03 ft
Distance D/Beam Spacing = 0.674

Multiple Presence Factor (AASHTO LRFD Table 3.6.1.1.2-1)
m = 1.2 for one lane
m = 1.00 for two lanes

Correction Factor for Skewed Bridge (ASSHTO LRFD Table 4.6.2.2.3c-1) see previous sheet for calculation
CF = 1.09

Note:
Skew Correction Factor to be use to adjust Lever Rule distribution factors for 1 and 2 lanes only if CF > 1.
Correction factor only distributed to shear distribution factor

For One Design Lane Loaded:
use for moment **DF =** **0.809** w/o CF
use for shear **DF =** **0.884** w/ CF
For Two or More Design Lanes Loaded:
use for moment **DF =** **0.674** w/o CF
use for shear **DF =** **0.736** w/ CF

AGENCY OF TRANSPORTATION **OFFICE MEMORANDUM**

POLICY, PLANNING AND INTERMODAL DEVELOPMENT DIVISION

TO: Christopher Williams, Structures Project Manager

FROM: Maureen Carr, Traffic Analysis Engineer MC
Colin Philbrook, Traffic Analysis Technician CCP

DATE: June 14, 2012

RE: Castleton BRF 015-2(10)
VT 30, BR #93

Per your request on March 16, 2012, please find complete estimated traffic data on the above project in the town of Castleton. The data for the years 2015, 2035 and 2055 is included in the table below.

If you have any questions, or if further information is needed, please call at x3667.

TRAFFIC DATA	2015	2035	2055
AADT	4000	4200	~
DHV	450	470	~
ADTT	250	410	~
%T	5.8	8.9	~
%D	52	52	~
FLEXIBLE ESAL	~	2015 ~ 2035 2,064,000	2015 ~ 2055 4,920,000

CC: Chris Cole, Director of Policy, Planning and Intermodal Development
Data Analysis Files

Castleton BRF 015-2(10) Memo.docx

Transportation
Land Development
Environmental
Services

Computations

VHB Vanasse Hangen Brustlin, Inc.

Project	Bridge #93	Project #	57632.00
Location	Castleton, VT	Sheet	
Calculated by	EAF	Date	1/21/14
Checked by		Date	
Title	Stress Limits for Concrete Check		

Stress Limits for Concrete

Temporary Before Losses (ASSHTO LRFD 5.9.4.1)

Compression $\boxed{0.60 * f'_{ci}}$ = 4.5 ksi

Tension with reinforcement $\boxed{0.24 * \sqrt{f'_{ci}}}$ = 0.657 ksi

w/o reinforcement $\boxed{0.0948 * \sqrt{f'_{ci}} \leq 0.2ksi}$

Assumed per Vtrans Structural Manual

$\boxed{f'_c}$ = 10 ksi can be set at designer requirements or 6 ksi per Vtrans section 5.1.1.1-1

$\boxed{f'_{ci}}$ = 7.5 ksi

$if\ f'_c \geq 7ksi$ then $f_{ci} = 5.5\ ksi$

$if\ f'_c < 7ksi$ then $f'_{ci} = 0.80 * f'_{ci}$

can be set at 5.5 maximum release strength if design strength is greater than or equal to 7 ksi to keep cost of prestressed beams down per Vtrans section 5.1.1.3

At Service - Full Losses (ASSHTO 5.9.4.2)

(Note Beam & Deck Precast together)

per ASSHTO LRFD Table 5.9.4.2.1-1

Compression = (P/S+DL+LL) = $\boxed{0.60 * f'_c}$ = 6.000 ksi

(P/S+DL) = $\boxed{0.45 * f'_c}$ = 4.500 ksi

per ASSHTO LRFD Table 5.9.4.2.2-1

Tension = $\boxed{0.19 * \sqrt{f'_c}}$ = 0.601 ksi (Not worse than moderate corrosion condition, use this for the stresses in the beam and deck)

Notes:

Service III checks tension in prestressed concrete superstructures, therefore topping top stress calculations can be ignored.

Also, the tensile stress limit is to check for tension in the precompressed tensile zone. The bottom og the prestressed girder is considered a precompressed tensile zone.

Section 2.3
Conspan Outputs
Interior Beam

PROJECT DATA

Project:	Castleton Bridge No 93
Designer:	EAF
Date:	Mar/3/2014
Checked By:	KBR
Date Checked:	Apr/10/2014
User job number:	57632
State:	Vermont, State Job, State Job #:BRF 015-2(10)
State Specification:	None
Design Code:	AASHTO LRFD - [6th Edition, 2012]
Units:	US
Span Type:	Simple Span
Flared Girder:	No
Comments:	28D NEXT Beam
File Name:	\\vtdata\projects\57632.00\tech\Bridge\Superstructure\NEXT Beam\Conspan\Castleton NEXT 28D.csl

GEOMETRY DATA

BRIDGE LAYOUT

Overall Width (ft)	35.000
Left curb (ft)	2.000
Right curb (ft)	2.000
Curb-to-curb width (ft)	31.000
Number of spans	1
Number of lanes	2
Lane width (ft)	11.000
Eff Deck thick (in)	0.000
Sacrificial thick (in)	0.000
Haunch thickness (in)	0.000
Haunch width (in)	0.000
Bridge c/s,MI(Ixx) (in4)	348368.00

SPAN DATA

Precast length,	ft =	68.350
Bearing-to-bearing,	ft =	67.300
Release span,	ft =	68.350

BEAM DATA

No	ID	Loc-prev ft	Area in2	MI(Ixx) in4	Height in	Yb in	B-topg in	B-trib ft
1	Next 28D Castleton	4.094	1361.0	87092.0	28.00	18.14	98.25	8.563
2	Next 28D Castleton	8.938	1361.0	87092.0	28.00	18.14	98.25	8.938
3	Next 28D Castleton	8.938	1361.0	87092.0	28.00	18.14	98.25	8.938
4	Next 28D Castleton	8.938	1361.0	87092.0	28.00	18.14	98.25	8.563

MATERIAL DATA - Project Level

As defined in Material Tab. For beam level properties look at Beam Specific output.

CONCRETE PROPERTIES

	Precast Release	Precast Final	C.I.P
f'c (ksi)	7.500	10.000	10.000
Wc (pcf)	150.000	150.000	150.000
Ec (ksi)	5250.270	6062.490	6062.490
K1	1.000	1.000	1.000
Thermal coeff.(1/°F)	0.00000600		

STRAND AND REBAR PROPERTIES

PRESTRESSED STEEL:

6/10-270K-LL, Low relaxation strands
Straight Pattern

Strand Diameter = 0.600 in
Tensile Strength(fpu) = 270.0 ksi
Use transformed strand and rebar: Strand Only

REINFORCING STEEL:
Tension/Shear steel: fy = 60.0 ksi Es = 29000 ksi

LOADS DATA

Loads generated using Permanent Load Wizard: NO

DEAD LOADS ON PRECAST

UNITS: (Point: kips, Location: ft, Line: klf, Trapez: klf)

Span	Beam	DC/DW	Type	Mag.1	Loc.1	Mag.2	Loc.2	Description
1	1	DC	Line	0.038	0.000	0.038	67.300	Concrete Joints
1	1	DC	Line	0.275	0.000	0.275	67.300	Concrete Curb
1	2	DC	Line	0.075	0.000	0.075	67.300	Concrete Joints
1	3	DC	Line	0.075	0.000	0.075	67.300	Concrete Joints
1	4	DC	Line	0.038	0.000	0.038	67.300	Concrete Joints
1	4	DC	Line	0.275	0.000	0.275	67.300	Concrete Curb

DIAPHRAGM LOADS - NONE

DEAD LOADS ON COMPOSITE

UNITS: (Point: kips, Location: ft, Line: klf, Trapez: klf, Area: ksf, Width: ft)

Span	DC/DW	Type	Mag.1	Loc.1/Width	Mag.2	Loc.2	Description
1	DC	Line	0.088	0.000	0.088	67.300	2 Rail Box Beam
1	DC	Line	0.012	0.000	0.012	67.300	Snow Barrier Fence
1	DW	Line	1.550	0.000	1.550	67.300	Wearing Surface
1	DW	Line	0.291	0.000	0.291	67.300	Extra Camber Tolerance

TEMPERATURE LOADS - NONE

LIVE LOADS

Live load deflection: not included.

ID	Type
Design Lane	Design Lane
Design Tandem	Design Tandem
Design Truck	Design Truck

Pedestrian Load - NONE

LIVE LOADS USED

LIVE LOAD LIBRARY: Default.cs3

1 ID: Design Lane

Description:	Design Lane as in AASHTO-LRFD
Type:	Design Lane

Lane Load:	Intensity = 0.64 klf,	Width = 10.00 ft

2 ID: Design Tandem

Description:	Design Tandem as in AASHTO-LRFD
Type:	Design Tandem

First Axle Magnitude = 25.00 k,	Wheel Spacing = 6.00 ft,	Truck Width = 10.00 ft

#	Magnitude, k	Max Spacing, ft	Min Spacing, ft	Increment, ft
1	25.00	4.00	4.00	0.00

3 ID: Design Truck

Description:	Design Truck as in AASHTO-LRFD
Type:	Design Truck

First Axle Magnitude = 8.00 k,	Wheel Spacing = 6.00 ft,	Truck Width = 10.00 ft

#	Magnitude, k	Max Spacing, ft	Min Spacing, ft	Increment, ft
1	32.00	14.00	14.00	0.00
2	32.00	30.00	14.00	2.00

4 ID: Fatigue Truck

Description:	Fatigue Truck as in AASHTO-LRFD
Type:	Fatigue Truck

First Axle Magnitude = 8.00 k,	Wheel Spacing = 6.00 ft,	Truck Width = 10.00 ft

#	Magnitude, k	Max Spacing, ft	Min Spacing, ft	Increment, ft
1	32.00	14.00	14.00	0.00
2	32.00	30.00	30.00	0.00

RATING LOADS

Design Live Load Type,	Weight (tons),	Wheel Spacing(ft)
H20	20.00	6.00
HL93 Design Load	-	-

Legal Live Load Type,	Weight (tons),	Wheel Spacing(ft)
3 Axle Straight	30.00	6.00
3S2	36.00	6.00
4 Axle Straight	34.50	6.00
5 Axle Semi	38.00	6.00
6 Axle Trailer	68.00	6.00

RATING LOADS DETAILS
Design Rating Loads:

1 ID: H20

Description:	VTrans H20
Type:	Design Truck

First Axle Magnitude = 8.00 k,	Wheel Spacing = 6.00 ft,	Truck Width = 10.00 ft

#	Magnitude, k	Max Spacing, ft	Min Spacing, ft	Increment, ft
1	32.00	14.00	14.00	0.00

2 ID: HL93 Design Load

Description:	HL93 Design Load - Internal
Type:	Design Lane + Design Truck + Design Tandem

* HL93 Internal loads:

HL93 Load ID: Design Lane *

Description:	Design Lane - Internal
Type:	Design Lane

Lane Load:	Intensity = 0.64 klf,	Width = 10.00 ft

HL93 Load ID: Design Tandem *

Description:	Design Tandem - Internal
Type:	Design Tandem

First Axle Magnitude = 25.00 k,	Wheel Spacing = 6.00 ft,	Truck Width = 10.00 ft

#	Magnitude, k	Max Spacing, ft	Min Spacing, ft	Increment, ft
1	25.00	4.00	4.00	0.00

HL93 Load ID: Design Truck *

Description:	Design Truck - Internal
Type:	Design Truck

First Axle Magnitude = 8.00 k,	Wheel Spacing = 6.00 ft,	Truck Width = 10.00 ft

#	Magnitude, k	Max Spacing, ft	Min Spacing, ft	Increment, ft
1	32.00	14.00	14.00	0.00
2	32.00	30.00	14.00	2.00

1 ID: Fatigue Truck

Description:	Fatigue Truck as in AASHTO-LRFD
Type:	Fatigue Truck

First Axle Magnitude = 8.00 k,	Wheel Spacing = 6.00 ft,	Truck Width = 10.00 ft

#	Magnitude, k	Max Spacing, ft	Min Spacing, ft	Increment, ft
1	32.00	14.00	14.00	0.00
2	32.00	30.00	30.00	0.00

3 ID: Fatigue Truck

Description:	Fatigue Truck as in AASHTO-LRFD
Type:	Fatigue Truck

First Axle Magnitude = 8.00 k,	Wheel Spacing = 6.00 ft,	Truck Width = 10.00 ft

#	Magnitude, k	Max Spacing, ft	Min Spacing, ft	Increment, ft
1	32.00	14.00	14.00	0.00
2	32.00	30.00	30.00	0.00

Legal Rating Loads:

1 ID: 3 Axle Straight

Description:	VTrans 3 Axle
Type:	Legal Truck

First Axle Magnitude = 12.00 k,	Wheel Spacing = 6.00 ft,	Truck Width = 10.00 ft

#	Magnitude, k	Max Spacing, ft	Min Spacing, ft	Increment, ft
1	24.00	15.00	15.00	0.00
2	24.00	4.00	4.00	0.00

2 ID: 3S2

Description:	VTrans 3S2
Type:	Legal Truck

First Axle Magnitude = 8.00 k,	Wheel Spacing = 6.00 ft,	Truck Width = 10.00 ft

#	Magnitude, k	Max Spacing, ft	Min Spacing, ft	Increment, ft
1	16.00	11.00	11.00	0.00
2	16.00	4.00	4.00	0.00
3	16.00	22.00	22.00	0.00
4	16.00	4.00	4.00	0.00

3 ID: 4 Axle Straight

Description:	VTrans 4 Axle
Type:	Legal Truck

First Axle Magnitude = 12.00 k,	Wheel Spacing = 6.00 ft,	Truck Width = 10.00 ft

#	Magnitude, k	Max Spacing, ft	Min Spacing, ft	Increment, ft
1	19.00	15.00	15.00	0.00
2	19.00	4.00	4.00	0.00
3	19.00	4.00	4.00	0.00

4 ID: Fatigue Truck

Description:	Fatigue Truck as in AASHTO-LRFD
Type:	Fatigue Truck

First Axle Magnitude = 8.00 k,	Wheel Spacing = 6.00 ft,	Truck Width = 10.00 ft

#	Magnitude, k	Max Spacing, ft	Min Spacing, ft	Increment, ft
1	32.00	14.00	14.00	0.00
2	32.00	30.00	30.00	0.00

ANALYSIS DATA

ANALYSIS PARAMETERS DATA

Truck impact:	1.330
Lane impact:	1.000
Strength II impact:	1.330
Fatigue impact:	1.150

DISTRIBUTION FACTORS (Art. 4.6.2.2):

Include sacrificial deck thick in ts:	NO
Is Span Post-tensioned:	NO
ADTT (Average Daily Truck Traffic) :	5000
Percent of the specified force effect :	1.00
Apply reduction of Moment for skew:	YES

NOTE: Beam specific dead and live load DFs are printed in beam level reports.

LOAD FACTORS: (Table 3.4.1-1 & 3.4.1-2)

	Live	DC(max)	DC(min)	DW(max)	DW(min)
Service I:	1.00	1.00	-	1.00	-
Service III:	0.80	1.00	-	1.00	-
Strength I:	1.75	1.25	0.90	1.50	0.65
Fatigue I:	1.50	-	-	-	-

Ductility Factor:	1.00
Redundancy Factor:	1.00
Importance Factor:	1.00

PROJECT DESIGN PARAMETERS

MULTIPLIERS:

Trans len mult:	Bonded	1.00
	Debonded	1.00
Dev len mult:	Bonded	1.60
	Debonded	2.00

Camber & Deflection Multiplier (PCI ref.)

	Erection	Final
Prestress:	1.80	2.45
Self. Wt:	1.85	2.70
Deck + Haunch:		2.30
Diaphragm:		3.00
DL-Prec.:		3.00
DL-Comp.:		3.00

MOMENT AND SHEAR PROVISIONS:

Ultimate Moment Capacity, Mr-prvd computed:	Strain Compatibility method.
Ultimate Concrete Strain:	0.0030
Horizontal Shear, Beam and Slab effects in Vu:	EXCLUDED

STRESS LIMITS (Art. 5.9.4):
STRESS LIMITS AT RELEASE BEFORE LOSSES:

		PRECAST	
Strength		7.50	ksi
Elasticity		5250.3	ksi
Max comp		4.50	ksi
Max tens		-0.20	ksi
Max tens,	w/reinf	-0.66	ksi

STRESS LIMITS AT FINAL AFTER LOSSES:

	PRECAST		DECK	
Strength	10.00	ksi	10.00	ksi
Elasticity	6062.49	ksi	6062.49	ksi

STRESS LIMITS AT FINAL 1 (P/S + DL + LL):

	PRECAST		DECK	
Max comp	6.00	ksi	6.00	ksi

STRESS LIMITS AT FINAL 2 (P/S + DL):

	PRECAST		DECK	
Max comp	4.50	ksi	4.50	ksi

FATIGUE I STRESS LIMITS AT FINAL 3 (50% P/S + 50% DL + F_LL) (Art. 5.5.3.1):

	PRECAST		DECK	
Max comp	4.00	ksi	-	ksi

SERVICE III (Tension):

	PRECAST		DECK	
Max tens	-0.60	ksi	-0.60	ksi

RESISTANCE FACTORS (Art. 5.5.4.2):

Flexure Reinforced	
Compression controlled sections	0.75
Tension controlled sections	0.90
Flexure Prestressed	
Compression controlled sections	0.75
Tension controlled sections	1.00
Shear	0.90

PRESTRESS LOSSES:

Time Dependent Losses, Approximate Method (Art.5.9.5.3)
Days to release = 0.75
Rel. Humid.(RH) = 75.0 %

RATING PARAMETERS

Rating Factors	References	Values
Condition Factor	Table 6A.4.2.3-1	1.00
System Factor for Flexural Effect	Table 6A.4.2.4-1	1.00
System Factor for Shear Effect	Art. 6A.4.2.4	1.00
ADTT	Section C3.6.1.1.2	5000
Dynamic Load Factor for Design Level	Art. 6A.4.3.3	0.33
Dynamic Load Factor for Legal and Permit Level	Table C6A.4.4.3-1	0.33

For Flexural Effect: Condition Factor * System Factor = 1.00 >= 0.85 (Art. 6A.4.2.1) OK
For Shear Effect: Condition Factor * System Factor = 1.00 >= 0.85 (Art. 6A.4.2.1 and 6A.4.2.4) OK

Dead Load Factors (Table 6A.4.2.2-1)

Limit State	DC	DW
Strength I	1.25	1.50
Strength II	1.25	1.50
Service I	1.00	1.00
Service III	1.00	1.00

Design Live Load Factors (Table 6A.4.3.2.2-1)

Limit State	Inventory	Operating
Strength I	1.75	1.35
Service I	-	-
Service III	0.80	-

Legal Live Load Factors (Table 6A.4.4.2.3a-1)

Limit State	Values
Strength I	1.30
Service I	-
Service III	1.00

Allowable Stresses (ksi)

Rating Level	Concrete Compression	Concrete Tension	Steel
Design Inventory	0.60 x f'c = 6.00	0.19 x sqrt(f'c) = 0.60	0.90 x f'y = 218.70
Design Operating	0.60 x f'c = 6.00	0.19 x sqrt(f'c) = 0.60	0.90 x f'y = 218.70
Legal	0.60 x f'c = 6.00	0.19 x sqrt(f'c) = 0.60	-
Permit	0.60 x f'c = 6.00	0.19 x sqrt(f'c) = 0.60	0.90 x f'y = 218.70

Consider shear reinf. across plane (FDOT alternative): No

BEAM REINFORCEMENT

BEAM SPECIFIC MATERIAL PROPERTIES:

Span#, Beam#	Tendon-ID	Girder-f'ci ksi	Girder-f'c ksi	Deck-f'c ksi
Span:1, Beam:1	6/10-270K-LL	7.50	10.00	10.00
Span:1, Beam:2	6/10-270K-LL	7.50	10.00	10.00
Span:1, Beam:3	6/10-270K-LL	7.50	10.00	10.00
Span:1, Beam:4	6/10-270K-LL	7.50	10.00	10.00

Span:1, Beam:1

PRESTRESSED STEEL:

44 strands, 6/10-270K-LL, Low relaxation strands
Straight Pattern

END PATTERN (Ycg = 6.68 in):

6 @ 2.500 in 8 @ 10.500 in	10 @ 4.500 in	10 @ 6.500 in	10 @ 8.500 in

REINFORCING STEEL:

Tension	steel:	
fy	60.0	ksi
Es	29000	ksi

Stirrups:

# legs	Size	fy (ksi)	Area (in2)	Spacing (in)	Start (ft)	End (ft)	Extends into Deck
4	US#4[M13]	60.0	0.80	3.00	0.0000	4.0000	No
4	US#4[M13]	60.0	0.80	9.00	4.0000	64.3501	No
4	US#4[M13]	60.0	0.80	3.00	64.3501	68.3501	No

Top Steel:

#bars	Size	Dist. from Top (in)	Area (in2)	Start (ft)	End (ft)	Side Cover (in)
11	US#5[M16]	2.50	3.410	0.5000	67.8500	3.00
11	US#5[M16]	6.25	3.410	0.5000	67.8500	3.00

Bottom Steel:

#bars	Size	Dist. from Top (in)	Area (in2)	Start (ft)	End (ft)	Side Cover (in)

Span:1, Beam:2

PRESTRESSED STEEL:
44 strands, 6/10-270K-LL, Low relaxation strands
Straight Pattern

END PATTERN (Ycg = 6.68 in):

6 @ 2.500 in 8 @ 10.500 in	10 @ 4.500 in	10 @ 6.500 in	10 @ 8.500 in

REINFORCING STEEL:

Tension	steel:	
fy	60.0	ksi
Es	29000	ksi

Stirrups:

# legs	Size	fy (ksi)	Area (in2)	Spacing (in)	Start (ft)	End (ft)	Extends into Deck
4	US#4[M13]	60.0	0.80	3.00	0.0000	4.0000	No
4	US#4[M13]	60.0	0.80	9.00	4.0000	64.3501	No
4	US#4[M13]	60.0	0.80	3.00	64.3501	68.3501	No

Top Steel:

#bars	Size	Dist. from Top (in)	Area (in2)	Start (ft)	End (ft)	Side Cover (in)
11	US#5[M16]	2.50	3.410	0.5000	67.8500	3.00
11	US#5[M16]	6.25	3.410	0.5000	67.8500	3.00

Bottom Steel:

#bars	Size	Dist. from Top (in)	Area (in2)	Start (ft)	End (ft)	Side Cover (in)

Span:1, Beam:3

PRESTRESSED STEEL:
44 strands, 6/10-270K-LL, Low relaxation strands
Straight Pattern

END PATTERN (Ycg = 6.68 in):

6 @ 2.500 in 8 @ 10.500 in	10 @ 4.500 in	10 @ 6.500 in	10 @ 8.500 in

REINFORCING STEEL:

Tension	steel:	
fy	60.0	ksi
Es	29000	ksi

Stirrups:

# legs	Size	fy (ksi)	Area (in2)	Spacing (in)	Start (ft)	End (ft)	Extends into Deck
4	US#4[M13]	60.0	0.80	3.00	0.0000	4.0000	No
4	US#4[M13]	60.0	0.80	9.00	4.0000	64.3501	No
4	US#4[M13]	60.0	0.80	3.00	64.3501	68.3501	No

Top Steel:

#bars	Size	Dist. from Top (in)	Area (in2)	Start (ft)	End (ft)	Side Cover (in)
11	US#5[M16]	2.50	3.410	0.5000	67.8500	3.00
11	US#5[M16]	6.25	3.410	0.5000	67.8500	3.00

Bottom Steel:

#bars	Size	Dist. from Top (in)	Area (in2)	Start (ft)	End (ft)	Side Cover (in)

Span:1, Beam:4

PRESTRESSED STEEL:
44 strands, 6/10-270K-LL, Low relaxation strands
Straight Pattern

END PATTERN (Ycg = 6.68 in):

6 @ 2.500 in 8 @ 10.500 in	10 @ 4.500 in	10 @ 6.500 in	10 @ 8.500 in

REINFORCING STEEL:

Tension	steel:	
fy	60.0	ksi
Es	29000	ksi

Stirrups:

# legs	Size	fy (ksi)	Area (in2)	Spacing (in)	Start (ft)	End (ft)	Extends into Deck
4	US#4[M13]	60.0	0.80	3.00	0.0000	4.0000	No
4	US#4[M13]	60.0	0.80	9.00	4.0000	64.3501	No
4	US#4[M13]	60.0	0.80	3.00	64.3501	68.3501	No

Top Steel:

#bars	Size	Dist. from Top (in)	Area (in2)	Start (ft)	End (ft)	Side Cover (in)
11	US#5[M16]	2.50	3.410	0.5000	69.6000	3.00
11	US#5[M16]	6.25	3.410	0.5000	69.6000	3.00

Bottom Steel:

#bars	Size	Dist. from Top (in)	Area (in2)	Start (ft)	End (ft)	Side Cover (in)

PROPERTIES

Span:1, Beam:2

PRECAST DATA:

Section Id	Next 28D Castleton		
Type	Double Tee		
Flng width	Top	98.250	in
thick	Top	8.000	in
Stems	No	2	
	Top	15.000	in
	Bot	13.750	in
Shear width		28.750	in

Minimum Thickness Criteria, Article 5.14.1.2.2 checked: OK.

GENERAL BRIDGE DATA:

Bridge Width	35.00	ft
Curb-to-curb	31.00	ft
Beam Spac. Lt./Rt	8.94/ 8.94	ft
Lane width	11.00	ft
Number of lanes	2	
Interior/Exterior	Interior	
Start Skew Angle	-18.00	degrees
End Skew Angle	-18.00	degrees

TOPPING DATA:

Effective Deck	Thickness	0.000	in	
Sacrificial Deck	Thickness	0.000	in	
Haunch:				
	Thickness	0.000	in	
	Width	0.000	in	
Effective	width	107.250	in	(Art. 4.6.2.6.1)

GENERAL LOAD DATA:

DEAD LOADS ON PRECAST

UNITS: (Point: kips, Location: ft, Line: klf, Trapez: klf)

DC/DW	Type	Mag.1	Loc.1	Mag.2	Loc.2	Description
DC	Line	0.075	0.000	0.075	67.300	Concrete Joints

Dead loads on composite: See Project info for composite loads

GENERAL SPAN DATA:

Overall length	68.350	ft
Release length	68.350	ft
Design length	67.300	ft

KERN POINTS:

Upper	21.67	in
Lower	11.65	in

DISTRIBUTION FACTORS (Art. 4.6.2.2):
Type i, not post-tensioned

Live Moment	(2+ lanes loaded)	0.648	(Manual input)	
Live Moment	(1 lane loaded)	0.466	(Manual input)	
Live Shear	(2+ lanes loaded)	0.961	(Manual input)	
Live Shear	(1 lane loaded)	0.783	(Manual input)	

The LL distribution computation is using the effective slab depth (ts = 0.00in).
The LL distribution computation is using the effective slab depth (ts = 0.00in).
The moment reduction factor for skew is applied.

Pedestrian	0.000	(Manual input)
Comp. DC	0.250	(Calculated)
Comp. DW	0.250	(Calculated)

Dead Loads distributed equally to all beams
RESISTANCE FACTORS (Art. 5.5.4.2):

Flexure Reinforced	
Compression controlled sections	0.75
Tension controlled sections	0.90
Flexure Prestressed	
Compression controlled sections	0.75
Tension controlled sections	1.00
Shear	0.90

SECTION PROPERTIES:

	PRECAST		COMPOSITE		
Area	1361.0	in2	1361.0	in2	#
Total Height	28.00	in	28.00	in	
Mom. of Inertia (Ixx)	87092	in4	87092	in4	#
Ht. of c.g.	18.14	in	18.14	in	#
Density	150.00	pcf	150.00	pcf	
Self-weight	1417.7	plf	1417.7	plf	
Mom. of Inertia (Iyy)	1159700.1	in4			
Poisson's Ratio	0.2				
Thermal Coeff.	0.000006000	1/°F			

(#) Of Total Section using Ect/Ec = 1.0000
Use transformed strand and rebar: No

Span:1, Beam:2
STRESS LIMITS (Art. 5.9.4):
STRESS LIMITS AT RELEASE BEFORE LOSSES:

		PRECAST	
Strength		7.50	ksi
Elasticity		5250.3	ksi
Max comp		4.50	ksi
Max tens		-0.20	ksi
Max tens,	w/reinf	-0.66	ksi

STRESS LIMITS AT FINAL AFTER LOSSES:

	PRECAST		DECK	
Strength	10.00	ksi	10.00	ksi
Elasticity	6062.49	ksi	6062.49	ksi

STRESS LIMITS AT FINAL 1 (P/S + DL + LL):

	PRECAST		DECK	
Max comp	6.00	ksi	6.00	ksi

STRESS LIMITS AT FINAL 2 (P/S + DL):

	PRECAST		DECK	
Max comp	4.50	ksi	4.50	ksi

FATIGUE I STRESS LIMITS AT FINAL 3 (50% P/S + 50% DL + F_LL) (Art. 5.5.3.1):

	PRECAST		DECK	
Max comp	4.00	ksi	-	ksi

SERVICE III (Tension):

	PRECAST		DECK	
Max tens	-0.60	ksi	-0.60	ksi

Span:1, Beam:2
PRESTRESSED STEEL:
44 strands, 6/10-270K-LL, Low relaxation strands
Straight Pattern

END PATTERN (Ycg = 6.68 in):

6 @ 2.500 in 8 @ 10.500 in	10 @ 4.500 in	10 @ 6.500 in	10 @ 8.500 in

SHIELDING AND REDUCED INITIAL PULLS:

Group	Strands	End	Heights	Mid		End		Shielding	Mid		Distance to center		Initial Frac	Pull Pull/Str	
3	2	10.500	in	10.500	in	0.50	ft	*	0.00	ft	25.000	in	75.0 %	43.9	kips
4	2	10.500	in	10.500	in	0.50	ft	*	0.00	ft	27.000	in	75.0 %	43.9	kips
7	2	8.500	in	8.500	in	4.00	ft		0.00	ft	25.000	in	75.0 %	43.9	kips
8	2	8.500	in	8.500	in	0.50	ft	*	0.00	ft	27.000	in	75.0 %	43.9	kips
9	2	8.500	in	8.500	in	4.00	ft		0.00	ft	29.000	in	75.0 %	43.9	kips
12	2	6.500	in	6.500	in	6.00	ft		0.00	ft	25.000	in	75.0 %	43.9	kips
13	2	6.500	in	6.500	in	0.50	ft	*	0.00	ft	27.000	in	75.0 %	43.9	kips
14	2	6.500	in	6.500	in	6.00	ft		0.00	ft	29.000	in	75.0 %	43.9	kips
17	2	4.500	in	4.500	in	8.00	ft		0.00	ft	25.000	in	75.0 %	43.9	kips
18	2	4.500	in	4.500	in	0.50	ft	*	0.00	ft	27.000	in	75.0 %	43.9	kips
19	2	4.500	in	4.500	in	8.00	ft		0.00	ft	29.000	in	75.0 %	43.9	kips
21	2	2.500	in	2.500	in	10.00	ft		0.00	ft	27.000	in	75.0 %	43.9	kips

Check for Art. 5.11.4.3: NG; there are 24 strands end debonded, of which:
* 10 have same 0.50 ft debond termination distance.

Strand Diameter	0.600	in
Strand Area	0.217	in2
Total Strand Area	9.548	in2
Trans. Len,bonded	3.000	ft
Trans. Len,debonded	3.000	ft
Dev. Len, bonded	11.133	ft
Dev. Len, debonded	13.916	ft
Holddown Force	0.000	kips
Tensile Strength(fpu)	270.0	ksi
Initial Prestress = 0.75fpu	202.5	ksi
Initial Pull	1933.5	kips
Beam Shrtng (PL/AE)	0.206	in

Span:1, Beam:2

ESTIMATED QUANTITIES

Prestressing (linear ft)	Strands (LB/1000ft)	(LB)	Beam Vol(C.Y.)	Concrete Wt(LB)	Stirrups (LB)	Longitudinal Bars (LB)
3007.400	740	2225.476	23.926	96900.578	711.495	1563.177

Span:1, Beam:2
REINFORCING STEEL:

Tension	steel:	
fy	60.0	ksi
Es	29000	ksi

Stirrups:

# legs	Size	fy (ksi)	Area (in2)	Spacing (in)	Start (ft)	End (ft)	Extends into Deck
4	US#4[M13]	60.0	0.80	3.00	0.0000	4.0000	No
4	US#4[M13]	60.0	0.80	9.00	4.0000	64.3501	No
4	US#4[M13]	60.0	0.80	3.00	64.3501	68.3501	No

Top Steel:

#bars	Size	Dist. from Top (in)	Area (in2)	Start (ft)	End (ft)	Side Cover (in)
11	US#5[M16]	2.50	3.410	0.5000	67.8500	3.00
11	US#5[M16]	6.25	3.410	0.5000	67.8500	3.00

Bottom Steel:

#bars	Size	Dist. from Top (in)	Area (in2)	Start (ft)	End (ft)	Side Cover (in)

LOSSES
Note: Values are calculated at Midspan

Str. area	9.5480	in2
Ycg	6.68	in
P_init	1933.5	kips
Ecc	11.46	in
Days to release	0.75	
Rel. Humid.(RH)	75.0	%
Es	28500.0	ksi
Eci	5250	ksi
Instalation of precast Time	56.00	days
Final Time	20000.00	days

Psi beam:	Tid	=	0.7110	Tdf	=	0.6662	Tif	=	1.1083
K:	Kid	=	0.8289	Kdf	=	0.8289			
Eps beam:	Tid	=	0.000172	Tdf	=	0.000096	Tif	=	0.000268
V/S ratio:		=	4.69						

AASHTO LOSSES

Elastic Shortening 14.91 ksi (Eq 5.9.5.2.3a-1), (fcgp= 2.747 ksi)

	Elastic Gains		Gains			Adjustment	
due	to Precast Loads		-0.32	ksi		0.03	ksi
due	to Composite Loads		-2.04	ksi		0.19	ksi
due	to Live Loads		-6.16	ksi		0.70	ksi

Time Dependent Losses (Refined Method (Art.5.9.5.4))

	Transfer		==>	Installation of Precast	==>	Final	
Steel relaxation*	1.91	ksi	(Eq 5.9.5.4.2c-1)		1.91	ksi	(Eq 5.9.5.4.3c-1)
Concrete shrinkage	4.06	ksi	(Eq 5.9.5.4.2a-1)		2.27	ksi	(Eq 5.9.5.4.3a-1)
Concrete creep	8.79	ksi	(Eq 5.9.5.4.2b-1)		2.79	ksi	(Eq 5.9.5.4.3b-1)
Initial Loss	14.91	ksi	(7.36 %)	Long Term Loss	21.73	ksi	(10.73 %)
Total Prestress Losses					29.05	ksi	(14.35 %)

* Steel relaxation is computed using AASHTO method

Prestressing Stress Limit Check (Table 5.9.3.1)

initial fpi = 202.5 ksi < 0.75 fpu, OK

initial fpe = 173.5 ksi < 0.80 fpy, OK

SHEAR/MOMENT ENVELOPE (&REACTIONS)

SHEAR AND MOMENT ENVELOPE : Span : 1, Beam : 2, SERVICE I
Shears: kips, Moments: kft

		Bearing	Trans	H/2	0.10L	0.20L	0.30L	0.40L	Midspan
Location,	ft	0.00	2.48	1.17	6.31	13.15	19.98	26.82	33.65
Self wt. :	M	0.0	113.7	54.7	272.8	504.6	670.2	769.5	802.7
(Max)	V	47.7	44.2	46.1	38.8	29.1	19.4	9.7	0.0
DL-Prec. :	M	0.0	6.0	2.9	14.4	26.7	35.5	40.7	42.5
DC(Max)	V	2.5	2.3	2.4	2.1	1.5	1.0	0.5	0.0
DL-Prec. :	M	0.0	0.0	0.0	0.0	0.0	0.0	0.0	0.0
DW(Max)	V	0.0	0.0	0.0	0.0	0.0	0.0	0.0	0.0
Deck + :	M	0.0	0.0	0.0	0.0	0.0	0.0	0.0	0.0
Haunch (Max)	V	0.0	0.0	0.0	0.0	0.0	0.0	0.0	0.0
Diaphragm :	M	0.0	0.0	0.0	0.0	0.0	0.0	0.0	0.0
(Max)	V	0.0	0.0	0.0	0.0	0.0	0.0	0.0	0.0
DL-Comp :	M	0.0	2.0	1.0	4.8	8.9	11.8	13.6	14.2
DC(Max)	V	0.8	0.8	0.8	0.7	0.5	0.3	0.2	0.0
DL-Comp :	M	0.0	36.9	17.8	88.6	163.8	217.6	249.8	260.6
DW(Max)	V	15.5	14.3	15.0	12.6	9.4	6.3	3.1	0.0
LL + I :	M+	0.0	158.8	76.5	377.9	687.4	892.8	1012.3	1037.5
	V	100.0	94.8	97.5	86.9	33.3	19.9	42.8	29.4
LL + I :	M-	0.0	0.0	0.0	0.0	0.0	0.0	0.0	0.0
	V	0.0	0.0	0.0	0.0	0.0	0.0	0.0	0.0
LL + I :	Vmx	100.0	94.8	97.5	86.9	74.1	61.8	49.9	38.4
	M	0.0	162.0	78.6	377.9	656.8	832.6	902.3	871.9
Total :	M+	0.0	317.4	152.8	758.5	1391.4	1827.9	2085.9	2157.4
	V	166.5	156.5	161.8	141.0	73.9	46.9	56.3	29.4
Total :	M-	0.0	0.0	0.0	0.0	0.0	0.0	0.0	0.0
	V	0.0	0.0	0.0	0.0	0.0	0.0	0.0	0.0
Total :	Vmx	166.5	156.5	161.8	141.0	114.7	88.8	63.4	38.4
	M	0.0	320.7	154.9	758.5	1360.8	1767.6	1976.0	1991.7

		0.60L	0.70L	0.80L	0.90L	H/2	Trans	Bearing
Location,	ft	40.49	47.32	54.16	60.99	66.13	64.83	67.30
Self wt. :	M	769.5	670.2	504.6	272.8	54.7	113.7	0.0
(Max)	V	9.7	19.4	29.1	38.8	46.1	44.2	47.7
DL-Prec. :	M	40.7	35.5	26.7	14.4	2.9	6.0	0.0
DC(Max)	V	0.5	1.0	1.5	2.1	2.4	2.3	2.5
DL-Prec. :	M	0.0	0.0	0.0	0.0	0.0	0.0	0.0
DW(Max)	V	0.0	0.0	0.0	0.0	0.0	0.0	0.0
Deck + :	M	0.0	0.0	0.0	0.0	0.0	0.0	0.0
Haunch (Max)	V	0.0	0.0	0.0	0.0	0.0	0.0	0.0
Diaphragm :	M	0.0	0.0	0.0	0.0	0.0	0.0	0.0
(Max)	V	0.0	0.0	0.0	0.0	0.0	0.0	0.0
DL-Comp :	M	13.6	11.8	8.9	4.8	1.0	2.0	-0.0
DC(Max)	V	0.2	0.3	0.5	0.7	0.8	0.8	0.8
DL-Comp :	M	249.8	217.6	163.8	88.6	17.8	36.9	-0.0
DW(Max)	V	3.1	6.3	9.4	12.6	15.0	14.3	15.5
LL + I :	M+	1012.3	892.8	687.4	377.9	76.5	158.8	0.0
	V	42.8	19.9	33.3	86.9	97.5	94.8	100.0
LL + I :	M-	0.0	0.0	0.0	0.0	-0.0	-0.0	-0.0
	V	0.0	0.0	0.0	0.0	0.0	0.0	0.0
LL + I :	Vmx	49.9	61.8	74.1	86.9	97.5	94.8	100.0
	M	902.3	832.6	656.8	377.9	78.6	162.0	0.0
Total :	M+	2085.9	1827.9	1391.4	758.5	152.8	317.4	0.0
	V	56.3	46.9	73.9	141.0	161.8	156.5	166.5
Total :	M-	0.0	0.0	0.0	0.0	0.0	0.0	0.0
	V	0.0	0.0	0.0	0.0	0.0	0.0	0.0
Total :	Vmx	63.4	88.8	114.7	141.0	161.8	156.5	166.5
	M	1976.0	1767.6	1360.8	758.5	154.9	320.7	0.0

REACTIONS (kips), SERVICE I

Load Type		Left Support	Right Support
Self Wt.		47.7	47.7
Deck+Haunch		0.0	0.0
Diaphragm		0.0	0.0
DL-Prec.(DC)		2.5	2.5
DL-Prec.(DW)		0.0	0.0
DL-Comp.(DC)		3.4	3.4
DL-Comp.(DW)		61.9	61.9
Live		83.6	83.6
Pedestrian		0.0	0.0

Upward reactions are positive.
Live Load reactions are per lane with no distribution factor and no impact.
Reactions are not multiplied by Load Modifiers (ductility, redundancy and operational importance).
Non-composite load types are per beam.
Composite and Pedestrian load types are per total bridge width.

SHEAR AND MOMENT ENVELOPE : Span : 1, Beam : 2, SERVICE III
Shears: kips, Moments: kft

		Bearing	Trans	H/2	0.10L	0.20L	0.30L	0.40L	Midspan
Location,	ft	0.00	2.48	1.17	6.31	13.15	19.98	26.82	33.65
Self wt. :	M	0.0	113.7	54.7	272.8	504.6	670.2	769.5	802.7
(Max)	V	47.7	44.2	46.1	38.8	29.1	19.4	9.7	0.0
DL-Prec. :	M	0.0	6.0	2.9	14.4	26.7	35.5	40.7	42.5
DC(Max)	V	2.5	2.3	2.4	2.1	1.5	1.0	0.5	0.0
DL-Prec. :	M	0.0	0.0	0.0	0.0	0.0	0.0	0.0	0.0
DW(Max)	V	0.0	0.0	0.0	0.0	0.0	0.0	0.0	0.0
Deck + :	M	0.0	0.0	0.0	0.0	0.0	0.0	0.0	0.0
Haunch (Max)	V	0.0	0.0	0.0	0.0	0.0	0.0	0.0	0.0
Diaphragm :	M	0.0	0.0	0.0	0.0	0.0	0.0	0.0	0.0
(Max)	V	0.0	0.0	0.0	0.0	0.0	0.0	0.0	0.0
DL-Comp :	M	0.0	2.0	1.0	4.8	8.9	11.8	13.6	14.2
DC(Max)	V	0.8	0.8	0.8	0.7	0.5	0.3	0.2	0.0
DL-Comp :	M	0.0	36.9	17.8	88.6	163.8	217.6	249.8	260.6
DW(Max)	V	15.5	14.3	15.0	12.6	9.4	6.3	3.1	0.0
LL + I :	M+	0.0	127.0	61.2	302.3	549.9	714.3	809.8	830.0
	V	80.0	75.9	78.0	69.5	26.6	15.9	34.3	23.5
LL + I :	M-	0.0	0.0	0.0	0.0	0.0	0.0	0.0	0.0
	V	0.0	0.0	0.0	0.0	0.0	0.0	0.0	0.0
LL + I :	Vmx	80.0	75.9	78.0	69.5	59.3	49.4	39.9	30.7
	M	0.0	129.6	62.9	302.3	525.5	666.0	721.9	697.5
Total :	M+	0.0	285.7	137.5	682.9	1253.9	1649.3	1883.5	1949.9
	V	146.5	137.5	142.3	123.6	67.2	43.0	47.8	23.5
Total :	M-	0.0	0.0	0.0	0.0	0.0	0.0	0.0	0.0
	V	0.0	0.0	0.0	0.0	0.0	0.0	0.0	0.0
Total :	Vmx	146.5	137.5	142.3	123.6	99.8	76.5	53.4	30.7
	M	0.0	288.3	139.2	682.9	1229.5	1601.1	1795.5	1817.3

		0.60L	0.70L	0.80L	0.90L	H/2	Trans	Bearing
Location,	ft	40.49	47.32	54.16	60.99	66.13	64.83	67.30
Self wt. :	M	769.5	670.2	504.6	272.8	54.7	113.7	0.0
(Max)	V	9.7	19.4	29.1	38.8	46.1	44.2	47.7
DL-Prec. :	M	40.7	35.5	26.7	14.4	2.9	6.0	0.0
DC(Max)	V	0.5	1.0	1.5	2.1	2.4	2.3	2.5
DL-Prec. :	M	0.0	0.0	0.0	0.0	0.0	0.0	0.0
DW(Max)	V	0.0	0.0	0.0	0.0	0.0	0.0	0.0
Deck + :	M	0.0	0.0	0.0	0.0	0.0	0.0	0.0
Haunch (Max)	V	0.0	0.0	0.0	0.0	0.0	0.0	0.0
Diaphragm :	M	0.0	0.0	0.0	0.0	0.0	0.0	0.0
(Max)	V	0.0	0.0	0.0	0.0	0.0	0.0	0.0
DL-Comp :	M	13.6	11.8	8.9	4.8	1.0	2.0	-0.0
DC(Max)	V	0.2	0.3	0.5	0.7	0.8	0.8	0.8
DL-Comp :	M	249.8	217.6	163.8	88.6	17.8	36.9	-0.0
DW(Max)	V	3.1	6.3	9.4	12.6	15.0	14.3	15.5
LL + I :	M+	809.8	714.3	549.9	302.3	61.2	127.0	0.0
	V	34.3	15.9	26.6	69.5	78.0	75.9	80.0
LL + I :	M-	0.0	0.0	0.0	0.0	-0.0	-0.0	-0.0
	V	0.0	0.0	0.0	0.0	0.0	0.0	0.0
LL + I :	Vmx	39.9	49.4	59.3	69.5	78.0	75.9	80.0
	M	721.9	666.0	525.5	302.3	62.9	129.6	0.0
Total :	M+	1883.5	1649.3	1253.9	682.9	137.5	285.7	0.0
	V	47.8	43.0	67.2	123.6	142.3	137.5	146.5
Total :	M-	0.0	0.0	0.0	0.0	0.0	0.0	0.0
	V	0.0	0.0	0.0	0.0	0.0	0.0	0.0
Total :	Vmx	53.4	76.5	99.8	123.6	142.3	137.5	146.5
	M	1795.5	1601.1	1229.5	682.9	139.2	288.3	0.0

SHEAR AND MOMENT ENVELOPE : Span : 1, Beam : 2, STRENGTH I
Shears: kips, Moments: kft

		Bearing	Trans	H/2	0.10L	0.20L	0.30L	0.40L	Midspan
Location,	ft	0.00	2.48	1.17	6.31	13.15	19.98	26.82	33.65
Self wt. :	M	0.0	142.2	68.4	341.0	630.8	837.7	961.9	1003.3
(Max)	V	59.6	55.2	57.6	48.5	36.3	24.2	12.1	0.0
Self wt. :	M	0.0	102.4	49.2	245.5	454.1	603.2	692.6	722.4
(Min)	V	42.9	39.8	41.4	34.9	26.2	17.4	8.7	0.0
DL-Prec. :	M	0.0	7.5	3.6	18.0	33.4	44.3	50.9	53.1
DC(Max)	V	3.2	2.9	3.0	2.6	1.9	1.3	0.6	0.0
DL-Prec. :	M	0.0	5.4	2.6	13.0	24.0	31.9	36.6	38.2
DC(Min)	V	2.3	2.1	2.2	1.8	1.4	0.9	0.5	0.0
DL-Prec. :	M	0.0	0.0	0.0	0.0	0.0	0.0	0.0	0.0
DW(Max)	V	0.0	0.0	0.0	0.0	0.0	0.0	0.0	0.0
DL-Prec. :	M	0.0	0.0	0.0	0.0	0.0	0.0	0.0	0.0
DW(Min)	V	0.0	0.0	0.0	0.0	0.0	0.0	0.0	0.0
Deck + :	M	0.0	0.0	0.0	0.0	0.0	0.0	0.0	0.0
Haunch (Max)	V	0.0	0.0	0.0	0.0	0.0	0.0	0.0	0.0
Deck + :	M	0.0	0.0	0.0	0.0	0.0	0.0	0.0	0.0
Haunch (Min)	V	0.0	0.0	0.0	0.0	0.0	0.0	0.0	0.0
Diaphragm :	M	0.0	0.0	0.0	0.0	0.0	0.0	0.0	0.0
(Max)	V	0.0	0.0	0.0	0.0	0.0	0.0	0.0	0.0
Diaphragm :	M	0.0	0.0	0.0	0.0	0.0	0.0	0.0	0.0
(Min)	V	0.0	0.0	0.0	0.0	0.0	0.0	0.0	0.0
DL-Comp :	M	0.0	2.5	1.2	6.0	11.1	14.8	17.0	17.7
DC(Max)	V	1.1	1.0	1.0	0.9	0.6	0.4	0.2	0.0
DL-Comp :	M	0.0	1.8	0.9	4.3	8.0	10.6	12.2	12.7
DC(Min)	V	0.8	0.7	0.7	0.6	0.5	0.3	0.2	0.0
DL-Comp :	M	0.0	55.4	26.6	132.8	245.7	326.4	374.7	390.9
DW(Max)	V	23.2	21.5	22.4	18.9	14.2	9.4	4.7	0.0
DL-Comp :	M	0.0	24.0	11.5	57.6	106.5	141.4	162.4	169.4
DW(Min)	V	10.1	9.3	9.7	8.2	6.1	4.1	2.0	0.0
LL + I :	M+	0.0	277.9	133.9	661.3	1202.9	1562.4	1771.5	1815.7
	V	174.9	165.9	170.7	152.0	58.3	34.8	74.9	51.5
LL + I :	M-	0.0	0.0	0.0	0.0	0.0	0.0	0.0	0.0
	V	0.0	0.0	0.0	0.0	0.0	0.0	0.0	0.0
LL + I :	Vmx	174.9	165.9	170.7	152.0	129.7	108.1	87.3	67.2
	M	0.0	283.5	137.5	661.3	1149.4	1457.0	1579.1	1525.7
Total :	M+	0.0	485.4	233.8	1159.2	2123.9	2785.6	3176.0	3280.6
	V	262.0	246.6	254.7	222.8	111.3	70.2	92.6	51.5
Total :	M-	0.0	0.0	0.0	0.0	0.0	0.0	0.0	0.0
	V	0.0	0.0	0.0	0.0	0.0	0.0	0.0	0.0
Total :	Vmx	262.0	246.6	254.7	222.8	182.7	143.5	105.0	67.2
	M	0.0	491.1	237.3	1159.2	2070.4	2680.2	2983.6	2990.7

		0.60L	0.70L	0.80L	0.90L	H/2	Trans	Bearing
Location,	ft	40.49	47.32	54.16	60.99	66.13	64.83	67.30
Self wt. :	M	961.9	837.7	630.8	341.0	68.4	142.2	0.0
(Max)	V	12.1	24.2	36.3	48.5	57.6	55.2	59.6
Self wt. :	M	692.6	603.2	454.1	245.5	49.2	102.4	0.0
(Min)	V	8.7	17.4	26.2	34.9	41.4	39.8	42.9
DL-Prec. :	M	50.9	44.3	33.4	18.0	3.6	7.5	0.0
DC(Max)	V	0.6	1.3	1.9	2.6	3.0	2.9	3.2
DL-Prec. :	M	36.6	31.9	24.0	13.0	2.6	5.4	0.0
DC(Min)	V	0.5	0.9	1.4	1.8	2.2	2.1	2.3
DL-Prec. :	M	0.0	0.0	0.0	0.0	0.0	0.0	0.0
DW(Max)	V	0.0	0.0	0.0	0.0	0.0	0.0	0.0
DL-Prec. :	M	0.0	0.0	0.0	0.0	0.0	0.0	0.0
DW(Min)	V	0.0	0.0	0.0	0.0	0.0	0.0	0.0
Deck + :	M	0.0	0.0	0.0	0.0	0.0	0.0	0.0
Haunch (Max)	V	0.0	0.0	0.0	0.0	0.0	0.0	0.0
Deck + :	M	0.0	0.0	0.0	0.0	0.0	0.0	0.0
Haunch (Min)	V	0.0	0.0	0.0	0.0	0.0	0.0	0.0
Diaphragm :	M	0.0	0.0	0.0	0.0	0.0	0.0	0.0
(Max)	V	0.0	0.0	0.0	0.0	0.0	0.0	0.0
Diaphragm :	M	0.0	0.0	0.0	0.0	0.0	0.0	0.0
(Min)	V	0.0	0.0	0.0	0.0	0.0	0.0	0.0
DL-Comp :	M	17.0	14.8	11.1	6.0	1.2	2.5	-0.0
DC(Max)	V	0.2	0.4	0.6	0.9	1.0	1.0	1.1
DL-Comp :	M	12.2	10.6	8.0	4.3	0.9	1.8	-0.0
DC(Min)	V	0.2	0.3	0.5	0.6	0.7	0.7	0.8
DL-Comp :	M	374.7	326.4	245.7	132.8	26.6	55.4	-0.0
DW(Max)	V	4.7	9.4	14.2	18.9	22.4	21.5	23.2
DL-Comp :	M	162.4	141.4	106.5	57.6	11.5	24.0	-0.0
DW(Min)	V	2.0	4.1	6.1	8.2	9.7	9.3	10.1
LL + I :	M+	1771.5	1562.4	1202.9	661.3	133.9	277.9	0.0
	V	74.9	34.8	58.3	152.0	170.7	165.9	174.9
LL + I :	M-	0.0	0.0	0.0	0.0	-0.0	-0.0	-0.0
	V	0.0	0.0	0.0	0.0	0.0	0.0	0.0
LL + I :	Vmx	87.3	108.1	129.7	152.0	170.7	165.9	174.9
	M	1579.1	1457.0	1149.4	661.3	137.5	283.5	0.0
Total :	M+	3176.0	2785.6	2123.9	1159.2	233.8	485.4	0.0
	V	92.6	70.2	111.3	222.8	254.7	246.6	262.0
Total :	M-	0.0	0.0	0.0	0.0	0.0	0.0	0.0
	V	0.0	0.0	0.0	0.0	0.0	0.0	0.0
Total :	Vmx	105.0	143.5	182.7	222.8	254.7	246.6	262.0
	M	2983.6	2680.2	2070.4	1159.2	237.3	491.1	0.0

REACTIONS (kips), STRENGTH I

Load Type	Left Support	Right Support
Self Wt.	59.6	59.6
Deck+Haunch	0.0	0.0
Diaphragm	0.0	0.0
DL-Prec.(DC)	3.2	3.2
DL-Prec.(DW)	0.0	0.0
DL-Comp.(DC)	4.2	4.2
DL-Comp.(DW)	92.9	92.9
Live	146.2	146.2
Pedestrian	0.0	0.0

Upward reactions are positive.
Live Load reactions are per lane with no distribution factor and no impact.
Reactions are not multiplied by Load Modifiers (ductility, redundancy and operational importance).
Non-composite load types are per beam.
Composite and Pedestrian load types are per total bridge width.

SHEAR AND MOMENT ENVELOPE : Span : 1, Beam : 2, FATIGUE I
Shears: kips, Moments: kft

		Bearing	Trans	H/2	0.10L	0.20L	0.30L	0.40L	Midspan
Location,	ft	0.00	2.48	1.17	6.31	13.15	19.98	26.82	33.65
Self wt. :	M	0.0	113.7	54.7	272.8	504.6	670.2	769.5	802.7
(Max)	V	47.7	44.2	46.1	38.8	29.1	19.4	9.7	0.0
Self wt. :	M	0.0	0.0	0.0	0.0	0.0	0.0	0.0	0.0
(Min)	V	0.0	0.0	0.0	0.0	0.0	0.0	0.0	0.0
DL-Prec. :	M	0.0	6.0	2.9	14.4	26.7	35.5	40.7	42.5
DC(Max)	V	2.5	2.3	2.4	2.1	1.5	1.0	0.5	0.0
DL-Prec. :	M	0.0	0.0	0.0	0.0	0.0	0.0	0.0	0.0
DC(Min)	V	0.0	0.0	0.0	0.0	0.0	0.0	0.0	0.0
DL-Prec. :	M	0.0	0.0	0.0	0.0	0.0	0.0	0.0	0.0
DW(Max)	V	0.0	0.0	0.0	0.0	0.0	0.0	0.0	0.0
DL-Prec. :	M	0.0	0.0	0.0	0.0	0.0	0.0	0.0	0.0
DW(Min)	V	0.0	0.0	0.0	0.0	0.0	0.0	0.0	0.0
Deck + :	M	0.0	0.0	0.0	0.0	0.0	0.0	0.0	0.0
Haunch (Max)	V	0.0	0.0	0.0	0.0	0.0	0.0	0.0	0.0
Deck + :	M	0.0	0.0	0.0	0.0	0.0	0.0	0.0	0.0
Haunch (Min)	V	0.0	0.0	0.0	0.0	0.0	0.0	0.0	0.0
Diaphragm :	M	0.0	0.0	0.0	0.0	0.0	0.0	0.0	0.0
(Max)	V	0.0	0.0	0.0	0.0	0.0	0.0	0.0	0.0
Diaphragm :	M	0.0	0.0	0.0	0.0	0.0	0.0	0.0	0.0
(Min)	V	0.0	0.0	0.0	0.0	0.0	0.0	0.0	0.0
DL-Comp :	M	0.0	2.0	1.0	4.8	8.9	11.8	13.6	14.2
DC(Max)	V	0.8	0.8	0.8	0.7	0.5	0.3	0.2	0.0
DL-Comp :	M	0.0	0.0	0.0	0.0	0.0	0.0	0.0	0.0
DC(Min)	V	0.0	0.0	0.0	0.0	0.0	0.0	0.0	0.0
DL-Comp :	M	0.0	36.9	17.8	88.6	163.8	217.6	249.8	260.6
DW(Max)	V	15.5	14.3	15.0	12.6	9.4	6.3	3.1	0.0
DL-Comp :	M	0.0	0.0	0.0	0.0	0.0	0.0	0.0	0.0
DW(Min)	V	0.0	0.0	0.0	0.0	0.0	0.0	0.0	0.0
LL + I :	M+	0.0	98.2	47.6	229.8	402.6	518.4	570.2	542.9
	V	70.9	67.1	69.1	61.2	51.5	40.2	30.5	22.4
LL + I :	M-	0.0	0.0	0.0	0.0	0.0	0.0	0.0	0.0
	V	0.0	0.0	0.0	0.0	0.0	0.0	0.0	0.0
LL + I :	Vmx	70.9	67.1	69.1	61.2	51.5	41.7	32.6	24.8
	M	0.0	98.2	47.6	229.8	402.6	496.4	520.2	496.0
Total :	M+	0.0	256.8	123.9	610.4	1106.7	1453.5	1643.9	1662.8
	V	137.5	128.8	133.4	115.3	92.0	67.3	44.0	22.4
Total :	M-	0.0	0.0	0.0	0.0	0.0	0.0	0.0	0.0
	V	0.0	0.0	0.0	0.0	0.0	0.0	0.0	0.0
Total :	Vmx	137.5	128.8	133.4	115.3	92.0	68.8	46.1	24.8
	M	0.0	256.8	123.9	610.4	1106.7	1431.4	1593.9	1615.8

		0.60L	0.70L	0.80L	0.90L	H/2	Trans	Bearing
Location,	ft	40.49	47.32	54.16	60.99	66.13	64.83	67.30
Self wt. :	M	769.5	670.2	504.6	272.8	54.7	113.7	0.0
(Max)	V	9.7	19.4	29.1	38.8	46.1	44.2	47.7
Self wt. :	M	0.0	0.0	0.0	0.0	0.0	0.0	0.0
(Min)	V	0.0	0.0	0.0	0.0	0.0	0.0	0.0
DL-Prec. :	M	40.7	35.5	26.7	14.4	2.9	6.0	0.0
DC(Max)	V	0.5	1.0	1.5	2.1	2.4	2.3	2.5
DL-Prec. :	M	0.0	0.0	0.0	0.0	0.0	0.0	0.0
DC(Min)	V	0.0	0.0	0.0	0.0	0.0	0.0	0.0
DL-Prec. :	M	0.0	0.0	0.0	0.0	0.0	0.0	0.0
DW(Max)	V	0.0	0.0	0.0	0.0	0.0	0.0	0.0
DL-Prec. :	M	0.0	0.0	0.0	0.0	0.0	0.0	0.0
DW(Min)	V	0.0	0.0	0.0	0.0	0.0	0.0	0.0
Deck + :	M	0.0	0.0	0.0	0.0	0.0	0.0	0.0
Haunch (Max)	V	0.0	0.0	0.0	0.0	0.0	0.0	0.0
Deck + :	M	0.0	0.0	0.0	0.0	0.0	0.0	0.0
Haunch (Min)	V	0.0	0.0	0.0	0.0	0.0	0.0	0.0
Diaphragm :	M	0.0	0.0	0.0	0.0	0.0	0.0	0.0
(Max)	V	0.0	0.0	0.0	0.0	0.0	0.0	0.0
Diaphragm :	M	0.0	0.0	0.0	0.0	0.0	0.0	0.0
(Min)	V	0.0	0.0	0.0	0.0	0.0	0.0	0.0
DL-Comp :	M	13.6	11.8	8.9	4.8	1.0	2.0	-0.0
DC(Max)	V	0.2	0.3	0.5	0.7	0.8	0.8	0.8
DL-Comp :	M	0.0	0.0	0.0	0.0	0.0	0.0	-0.0
DC(Min)	V	0.0	0.0	0.0	0.0	0.0	0.0	0.0
DL-Comp :	M	249.8	217.6	163.8	88.6	17.8	36.9	-0.0
DW(Max)	V	3.1	6.3	9.4	12.6	15.0	14.3	15.5
DL-Comp :	M	0.0	0.0	0.0	0.0	0.0	0.0	-0.0
DW(Min)	V	0.0	0.0	0.0	0.0	0.0	0.0	0.0
LL + I :	M+	570.2	518.4	402.6	229.8	47.6	98.2	0.0
	V	30.5	40.2	51.5	61.2	69.1	67.1	70.9
LL + I :	M-	0.0	0.0	0.0	0.0	0.0	0.0	0.0
	V	0.0	0.0	0.0	0.0	0.0	0.0	0.0
LL + I :	Vmx	32.6	41.7	51.5	61.2	69.1	67.1	70.9
	M	520.2	496.4	402.6	229.8	47.6	98.2	0.0
Total :	M+	1643.9	1453.5	1106.7	610.4	123.9	256.8	0.0
	V	44.0	67.3	92.0	115.3	133.4	128.8	137.5
Total :	M-	0.0	0.0	0.0	0.0	0.0	0.0	0.0
	V	0.0	0.0	0.0	0.0	0.0	0.0	0.0
Total :	Vmx	46.1	68.8	92.0	115.3	133.4	128.8	137.5
	M	1593.9	1431.4	1106.7	610.4	123.9	256.8	0.0

POSITIVE ENVELOPE STRESSES

Span : 1, Beam : 2, SERVICE I

RELEASE STRESSES, (ksi) (LOSS = 7.36 %)

	Trans	0.10L /0.90L	0.20L /0.80L	0.30L /0.70L	0.40L /0.60L	Midspan
Location, ft	3.00	6.83	13.67	20.51	27.34	34.17
Beam-Self						
Precast-top	0.189	0.405	0.720	0.945	1.080	1.125
Bottom	-0.347	-0.745	-1.324	-1.738	-1.986	-2.069
Prestress						
Precast-top	-0.611	-0.720	-1.007	-1.007	-1.007	-1.007
Bottom	3.531	4.288	5.591	5.591	5.591	5.591
Total						
Precast-top	-0.422	-0.315	-0.288	-0.063	0.072	0.117
Bottom	3.183	3.543	4.266	3.852	3.604	3.521

SERVICE I

POSITIVE ENVELOPE STRESSES, (ksi) (LOSS = 14.35 %)

	Bearing	Trans	H/2	0.10L /0.90L	0.20L /0.80L	0.30L /0.70L	0.40L /0.60L	Midspan
Location, ft	0.00	2.48	1.17	6.31	13.15	19.98	26.82	33.65
Prestress								
Precast-top	-0.078	-0.565	-0.308	-0.665	-0.932	-0.932	-0.932	-0.932
Bottom	0.425	3.265	1.764	3.964	5.169	5.169	5.169	5.169
Self wt.								
Precast-top	0.000	0.155	0.074	0.371	0.686	0.910	1.045	1.090
Bottom	-0.000	-0.284	-0.137	-0.682	-1.261	-1.675	-1.923	-2.006
DL-Prec (DC)								
Precast-top	0.000	0.008	0.004	0.020	0.036	0.048	0.055	0.058
Bottom	-0.000	-0.015	-0.007	-0.036	-0.067	-0.089	-0.102	-0.106
DL-Prec (DW)								
Precast-top	-0.000	-0.000	-0.000	-0.000	-0.000	-0.000	-0.000	-0.000
Bottom	-0.000	-0.000	-0.000	-0.000	-0.000	-0.000	-0.000	-0.000
Diaphragm								
Precast-top	-0.000	-0.000	-0.000	-0.000	-0.000	-0.000	-0.000	-0.000
Bottom	-0.000	-0.000	-0.000	-0.000	-0.000	-0.000	-0.000	-0.000
Deck + Haunch								
Precast-top	-0.000	-0.000	-0.000	-0.000	-0.000	-0.000	-0.000	-0.000
Bottom	-0.000	-0.000	-0.000	-0.000	-0.000	-0.000	-0.000	-0.000
DL-Comp (DC)								
Precast-top	-0.000	0.003	0.001	0.007	0.012	0.016	0.018	0.019
Bottom	0.000	-0.005	-0.002	-0.012	-0.022	-0.030	-0.034	-0.035
DL-Comp (DW)								
Precast-top	-0.000	0.050	0.024	0.120	0.223	0.296	0.339	0.354
Bottom	0.000	-0.092	-0.044	-0.221	-0.409	-0.544	-0.624	-0.651
LL+I(+)								
Precast-top	-0.000	0.216	0.104	0.513	0.934	1.213	1.375	1.410
Bottom	-0.000	-0.397	-0.191	-0.945	-1.718	-2.232	-2.530	-2.593
Final 1 (P/S + DL + LL)								
Precast-top	-0.078	-0.134	-0.100	0.365	0.959	1.552	1.902	1.999
Bottom	0.425	2.471	1.381	2.069	1.692	0.601	-0.044	-0.223
Final 2 (P/S + DL)								
Precast-top	-0.078	-0.349	-0.204	-0.148	0.025	0.339	0.527	0.590
Bottom	0.425	2.868	1.573	3.013	3.410	2.832	2.486	2.370

Span : 1, Beam : 2, SERVICE III

RELEASE STRESSES, (ksi) (LOSS = 7.36 %)

	Trans	0.10L /0.90L	0.20L /0.80L	0.30L /0.70L	0.40L /0.60L	Midspan
Location, ft	3.00	6.83	13.67	20.51	27.34	34.17
Beam-Self						
Precast-top	0.189	0.405	0.720	0.945	1.080	1.125
Bottom	-0.347	-0.745	-1.324	-1.738	-1.986	-2.069
Prestress						
Precast-top	-0.611	-0.720	-1.007	-1.007	-1.007	-1.007
Bottom	3.531	4.288	5.591	5.591	5.591	5.591
Total						
Precast-top	-0.422	-0.315	-0.288	-0.063	0.072	0.117
Bottom	3.183	3.543	4.266	3.852	3.604	3.521
As_top, in2	2.267	1.177	0.833	0.000	0.000	0.000
Ast_prvd, in2	6.820	6.820	6.820	6.820	6.820	6.820

SERVICE III

POSITIVE ENVELOPE STRESSES, (ksi) (LOSS = 14.35 %)

	Bearing	Trans	H/2	0.10L /0.90L	0.20L /0.80L	0.30L /0.70L	0.40L /0.60L	Midspan
Location, ft	0.00	2.48	1.17	6.31	13.15	19.98	26.82	33.65
Prestress								
Precast-top	-0.078	-0.565	-0.308	-0.665	-0.932	-0.932	-0.932	-0.932
Bottom	0.425	3.265	1.764	3.964	5.169	5.169	5.169	5.169
Self wt.								
Precast-top	0.000	0.155	0.074	0.371	0.686	0.910	1.045	1.090
Bottom	-0.000	-0.284	-0.137	-0.682	-1.261	-1.675	-1.923	-2.006
DL-Prec (DC)								
Precast-top	0.000	0.008	0.004	0.020	0.036	0.048	0.055	0.058
Bottom	-0.000	-0.015	-0.007	-0.036	-0.067	-0.089	-0.102	-0.106
DL-Prec (DW)								
Precast-top	-0.000	-0.000	-0.000	-0.000	-0.000	-0.000	-0.000	-0.000
Bottom	-0.000	-0.000	-0.000	-0.000	-0.000	-0.000	-0.000	-0.000
Diaphragm								
Precast-top	-0.000	-0.000	-0.000	-0.000	-0.000	-0.000	-0.000	-0.000
Bottom	-0.000	-0.000	-0.000	-0.000	-0.000	-0.000	-0.000	-0.000
Deck + Haunch								
Precast-top	-0.000	-0.000	-0.000	-0.000	-0.000	-0.000	-0.000	-0.000
Bottom	-0.000	-0.000	-0.000	-0.000	-0.000	-0.000	-0.000	-0.000
DL-Comp (DC)								
Precast-top	-0.000	0.003	0.001	0.007	0.012	0.016	0.018	0.019
Bottom	0.000	-0.005	-0.002	-0.012	-0.022	-0.030	-0.034	-0.035
DL-Comp (DW)								
Precast-top	-0.000	0.050	0.024	0.120	0.223	0.296	0.339	0.354
Bottom	0.000	-0.092	-0.044	-0.221	-0.409	-0.544	-0.624	-0.651
LL+I(+)								
Precast-top	-0.000	0.173	0.083	0.411	0.747	0.970	1.100	1.128
Bottom	-0.000	-0.317	-0.153	-0.756	-1.374	-1.785	-2.024	-2.075
Final 1 (P/S + DL + LL)								
Precast-top	-0.078	-0.177	-0.121	0.262	0.772	1.309	1.627	1.717
Bottom	0.425	2.550	1.420	2.257	2.035	1.047	0.462	0.296

Span : 1, Beam : 2, FATIGUE I
POSITIVE ENVELOPE STRESSES, (ksi)

		Bearing	Trans	H/2	0.10L /0.90L	0.20L /0.80L	0.30L /0.70L	0.40L /0.60L	Midspan
Location, ft		0.00	2.48	1.17	6.31	13.15	19.98	26.82	33.65
F_LL+I(+)									
Precast-top		-0.000	0.133	0.065	0.312	0.547	0.704	0.775	0.738
Bottom		-0.000	-0.245	-0.119	-0.574	-1.006	-1.296	-1.425	-1.357
Final 3 (50% P/S	+ 50%	DL + F_LL)							
Precast-top		-0.039	-0.041	-0.037	0.238	0.559	0.874	1.038	1.033
Bottom		0.213	1.189	0.668	0.932	0.698	0.120	-0.182	-0.172

VERTICAL/HORIZONTAL SHEAR

VERTICAL SHEAR (Art. 5.8) - Span : 1, Beam : 2, STRENGTH I
Using General Beta Theta Equation procedure - Art.5.8.3.4.2

Location(ft) Vu (kips) Mcor (kft)	bv (in) a (in)	de (in) dv (in)	Aps (in2) fpo (ksi)	Vp (kips) vu/fc	eps_x Vc-com (kips)	Theta Beta	Vs-reqd (kips) Max.spc. (in)	Av/s (in2/ft) min.Av/s (in2/ft)	Av-prvd (in2/ft) pVn/Vu	Al_reqd (in2) Aps* (in2)
Bearing :	0.52									
262.0	28.75	20.97	1.134	0.0	6.00e-3	50.0	238.7	2.725	3.200	0.00
0.0	0.17	20.88	33.1	0.048	52.4	0.87	16.70	0.575	1.143	0.536
Transfer :	3.00									
246.6	28.75	20.97	6.510	0.0	-0.16e-3	28.4	0.0	0.575	3.200	0.00
491.1	1.35	20.29	189.0	0.047	318.3	5.46	16.23	0.575	3.350	4.770
Critical :	2.23									
251.4	28.75	20.97	6.510	0.0	-0.17e-3	28.4	0.0	0.575	3.200	0.00
334.0	0.98	20.47	189.0	0.047	323.4	5.50	16.38	0.575	3.326	3.304
0.1L :	6.84									
222.8	28.75	20.87	8.246	0.0	-0.15e-3	28.5	0.0	0.575	1.067	0.00
1159.2	1.94	20.16	189.0	0.043	312.8	5.40	16.13	0.575	2.064	5.337
0.2L :	13.67									
182.7	28.75	21.32	9.548	0.0	-0.09e-3	28.7	0.0	0.575	1.067	0.00
2070.4	3.03	20.16	189.0	0.035	297.9	5.14	16.13	0.575	2.435	7.502
0.3L :	20.50									
143.5	28.75	21.32	9.548	0.0	-0.01e-3	28.9	0.0	0.575	1.067	0.00
2680.2	3.12	20.16	189.0	0.028	281.2	4.85	16.13	0.575	2.983	9.300
0.4L :	27.34									
105.0	28.75	21.32	9.548	0.0	0.28e-3	30.0	0.0	0.575	1.067	0.00
2983.6	3.04	20.16	189.0	0.020	229.7	3.97	16.13	0.575	3.566	9.548
0.5L :	34.17									
67.2	28.75	21.32	9.548	0.0	0.16e-3	29.6	0.0	0.575	1.067	0.00
2990.7	3.04	20.16	189.0	0.013	248.7	4.29	16.13	0.575	5.867	9.548
0.6L :	41.01									
105.0	28.75	21.32	9.548	0.0	0.28e-3	30.0	0.0	0.575	1.067	0.00
2983.6	3.04	20.16	189.0	0.020	229.7	3.97	16.13	0.575	3.566	9.548
0.7L :	47.85									
143.5	28.75	21.32	9.548	0.0	-0.01e-3	28.9	0.0	0.575	1.067	0.00
2680.2	3.12	20.16	189.0	0.028	281.2	4.85	16.13	0.575	2.983	9.300
0.8L :	54.68									
182.7	28.75	21.32	9.548	0.0	-0.09e-3	28.7	0.0	0.575	1.067	0.00
2070.4	3.03	20.16	189.0	0.035	297.9	5.14	16.13	0.575	2.435	7.502

Location(ft) Vu (kips) Mcor (kft)	bv (in) a (in)	de (in) dv (in)	Aps (in2) fpo (ksi)	Vp (kips) vu/fc	eps_x Vc-com (kips)	Theta Beta	Vs-reqd (kips) Max.spc. (in)	Av/s (in2/ft) min.Av/s (in2/ft)	Av-prvd (in2/ft) pVn/Vu	Al_reqd (in2) Aps* (in2)
	61.51									
222.8	28.75	20.87	8.246	0.0	-0.15e-3	28.5	0.0	0.575	1.067	0.00
1159.2	1.94	20.16	189.0	0.043	312.8	5.40	16.13	0.575	2.064	5.337
Critical :	66.12									
251.4	28.75	20.97	6.510	0.0	-0.17e-3	28.4	0.0	0.575	3.200	0.00
334.0	0.98	20.47	189.0	0.047	323.4	5.50	16.38	0.575	3.326	3.304
Transfer :	65.35									
246.6	28.75	20.97	6.510	0.0	-0.16e-3	28.4	0.0	0.575	3.200	0.00
491.1	1.35	20.29	189.0	0.047	318.3	5.46	16.23	0.575	3.350	4.770
Bearing :	67.82									
262.0	28.75	20.97	1.134	0.0	6.00e-3	50.0	238.7	2.725	3.200	0.00
0.0	0.17	20.88	33.1	0.048	52.4	0.87	16.70	0.575	1.143	0.536

ANCHORAGE ZONE REINFORCEMENT (Art. 5.10.10)
Span : 1, Beam : 2

Fpi (kips)	fs (ksi)	h/4 (in)	Abrst_rqrd (in2)
1318.27	20.00	7.00	2.64

CAMBER/DEFLECTION

CAMBER AND DEFLECTIONS: SERVICE I
(Span : 1, Beam : 2; Units: in)

	Release	Mult	Erection	Mult	Final
At 0.1 x L =	6.31 ft				
Prestress	1.304	1.80	2.348	2.45	3.195
Self Wt.	-0.478	1.85	-0.884	2.70	-1.290
Deck + Haunch			0.000	2.30	0.000
DL-Prec. (DC)			-0.019	3.00	-0.058
Diaphragm			0.000	3.00	0.000
DL-Prec. (DW)			0.000	3.00	0.000
DL-Comp. (DC)			-0.006	3.00	-0.019
DL-Comp. (DW)			-0.119	3.00	-0.356
Live Load	Not Included				
Total	0.826		1.319		1.472

	Release	Mult	Erection	Mult	Final
At 0.2 x L =	13.15 ft				
Prestress	2.314	1.80	4.166	2.45	5.670
Self Wt.	-0.904	1.85	-1.673	2.70	-2.441
Deck + Haunch			0.000	2.30	0.000
DL-Prec. (DC)			-0.038	3.00	-0.114
Diaphragm			0.000	3.00	0.000
DL-Prec. (DW)			0.000	3.00	0.000
DL-Comp. (DC)			-0.013	3.00	-0.038
DL-Comp. (DW)			-0.234	3.00	-0.702
Live Load	Not Included				
Total	1.410		2.208		2.373

	Release	Mult	Erection	Mult	Final
At 0.3 x L =	19.98 ft				
Prestress	3.069	1.80	5.524	2.45	7.519
Self Wt.	-1.238	1.85	-2.290	2.70	-3.343
Deck + Haunch			0.000	2.30	0.000
DL-Prec. (DC)			-0.053	3.00	-0.159
Diaphragm			0.000	3.00	0.000
DL-Prec. (DW)			0.000	3.00	0.000
DL-Comp. (DC)			-0.018	3.00	-0.053
DL-Comp. (DW)			-0.325	3.00	-0.975
Live Load	Not Included				
Total	1.831		2.839		2.991

	Release	Mult	Erection	Mult	Final
At 0.4 x L =	26.82 ft				
Prestress	3.522	1.80	6.340	2.45	8.629
Self Wt.	-1.450	1.85	-2.682	2.70	-3.915
Deck + Haunch			0.000	2.30	0.000
DL-Prec. (DC)			-0.062	3.00	-0.187
Diaphragm			0.000	3.00	0.000
DL-Prec. (DW)			0.000	3.00	0.000
DL-Comp. (DC)			-0.021	3.00	-0.062
DL-Comp. (DW)			-0.383	3.00	-1.148
Live Load	Not Included				
Total	2.072		3.192		3.317

	Release	Mult	Erection	Mult	Final
At 0.5 x L =	33.65 ft				
Prestress	3.673	1.80	6.611	2.45	8.999
Self Wt.	-1.523	1.85	-2.817	2.70	-4.111
Deck + Haunch			0.000	2.30	0.000
DL-Prec. (DC)			-0.066	3.00	-0.197
Diaphragm			0.000	3.00	0.000
DL-Prec. (DW)			0.000	3.00	0.000
DL-Comp. (DC)			-0.022	3.00	-0.066
DL-Comp. (DW)			-0.402	3.00	-1.207
Live Load	Not Included				
Total	2.151		3.305		3.419

	Release	Mult	Erection	Mult	Final
At 0.6 x L =	40.49 ft				
Prestress	3.522	1.80	6.340	2.45	8.629
Self Wt.	-1.450	1.85	-2.682	2.70	-3.915
Deck + Haunch			0.000	2.30	0.000
DL-Prec. (DC)			-0.062	3.00	-0.187
Diaphragm			0.000	3.00	0.000
DL-Prec. (DW)			0.000	3.00	0.000
DL-Comp. (DC)			-0.021	3.00	-0.062
DL-Comp. (DW)			-0.383	3.00	-1.148
Live Load	Not Included				
Total	2.072		3.192		3.317

	Release	Mult	Erection	Mult	Final
At 0.7 x L =	47.32 ft				
Prestress	3.069	1.80	5.524	2.45	7.519
Self Wt.	-1.238	1.85	-2.290	2.70	-3.343
Deck + Haunch			0.000	2.30	0.000
DL-Prec. (DC)			-0.053	3.00	-0.159
Diaphragm			0.000	3.00	0.000
DL-Prec. (DW)			0.000	3.00	0.000
DL-Comp. (DC)			-0.018	3.00	-0.053
DL-Comp. (DW)			-0.325	3.00	-0.975
Live Load	Not Included				
Total	1.831		2.839		2.991

	Release	Mult	Erection	Mult	Final
At 0.8 x L =	54.16 ft				
Prestress	2.314	1.80	4.166	2.45	5.670
Self Wt.	-0.904	1.85	-1.673	2.70	-2.441
Deck + Haunch			0.000	2.30	0.000
DL-Prec. (DC)			-0.038	3.00	-0.114
Diaphragm			0.000	3.00	0.000
DL-Prec. (DW)			0.000	3.00	0.000
DL-Comp. (DC)			-0.013	3.00	-0.038
DL-Comp. (DW)			-0.234	3.00	-0.702
Live Load	Not Included				
Total	1.410		2.208		2.373

	Release	Mult	Erection	Mult	Final
At 0.9 x L =	60.99 ft				
Prestress	1.304	1.80	2.348	2.45	3.195
Self Wt.	-0.478	1.85	-0.884	2.70	-1.290
Deck + Haunch			0.000	2.30	0.000
DL-Prec. (DC)			-0.019	3.00	-0.058
Diaphragm			0.000	3.00	0.000
DL-Prec. (DW)			0.000	3.00	0.000
DL-Comp. (DC)			-0.006	3.00	-0.019
DL-Comp. (DW)			-0.119	3.00	-0.356
Live Load	Not Included				
Total	0.826		1.319		1.472

ULTIMATE MOMENT

ULTIMATE - Span : 1, Beam : 2, STRENGTH I
(Mr-prvd computed by Strain Compatibility method. Ult. Conc. Strain = 0.00300)

Location (ft) Mu k.ft	dp in	Aps in2	fps ksi	c in	a in	Mr-prvd k.ft	c/dt	Phi	Mcr k.ft	min Mr k.ft	Crkg Ratio	Mu-p/r Ratio
Transfer	2.48											
485.4	21.0	4.196	268.5	2.1	1.3	1911.1	0.081T	1.00	-	-	-	-
H/2	1.17											
233.8	21.1	2.258	269.2	1.1	0.7	1049.9	0.044T	1.00	-	-	-	-
0.1L	6.31											
1159.2	20.9	6.028	267.6	3.0	1.9	2688.5	0.117T	1.00	-	-	-	-
0.2L	13.15											
2123.9	21.3	8.898	266.0	4.7	3.0	4177.2	0.183T	1.00	2760.8	2760.8	1.51	-
0.3L	19.98											
2785.6	21.4	9.469	265.9	4.8	3.1	4307.0	0.188T	1.00	2760.8	2760.8	1.56	-
0.4L	26.82											
3176.0	21.3	9.548	266.0	4.7	3.0	4191.9	0.183T	1.00	2760.8	2760.8	1.52	-
0.5L	33.65											
3280.6	21.3	9.548	266.0	4.7	3.0	4191.9	0.183T	1.00	2760.8	2760.8	1.52	-
0.6L	40.49											
3176.0	21.3	9.548	266.0	4.7	3.0	4191.9	0.183T	1.00	2760.8	2760.8	1.52	-
0.7L	47.32											
2785.6	21.4	9.469	265.9	4.8	3.1	4307.0	0.188T	1.00	2760.8	2760.8	1.56	-
0.8L	54.16											
2123.9	21.3	8.898	266.0	4.7	3.0	4177.2	0.183T	1.00	2760.8	2760.8	1.51	-
0.9L	60.99											
1159.2	20.9	6.028	267.6	3.0	1.9	2688.5	0.117T	1.00	-	-	-	-
H/2	66.13											
233.8	21.1	2.258	269.2	1.1	0.7	1049.9	0.044T	1.00	-	-	-	-
Transfer	64.82											
485.4	21.0	4.196	268.5	2.1	1.3	1911.1	0.081T	1.00	-	-	-	-

Legend: C = Compression-Controlled (c/dt > 0.600)
I = In-Transition (0.60 >= c/dt > 0.375)
T = Tension-Controlled (c/dt <= 0.375)
Note : fr used for calculating Mcr is computed using AASHTO method (Art.5.4.2.6.)
Consider Bottom Tension Steel Contribution : NO

DETENSIONING

Span : 1, Beam : 2; Groups 1-22; Units: ksi

Grp	Str		Ys,in		3.00ft	3.50ft	7.00ft	9.00ft	11.00ft	13.00ft
1	2	E	2.50	Ft	0.105	0.135	0.330	0.431	0.524	
		M	2.50	Fb	-0.023	-0.078	-0.437	-0.623	**-0.79***	
2	2	E	10.50	Ft	0.094	0.124	0.319	0.420	0.513	0.599
		M	10.50	Fb	0.167	0.112	-0.247	-0.433	-0.605	**-0.76***
3	2	E	10.50	Ft	0.085	0.113	0.309	0.409	0.503	0.588
		M	10.50	Fb	0.324	0.301	-0.058	-0.244	-0.415	-0.573
4	2	E	10.50	Ft	0.076	0.103	0.298	0.399	0.492	0.578
		M	10.50	Fb	0.482	0.491	0.131	-0.054	-0.226	-0.383
5	2	E	10.50	Ft	0.066	0.092	0.287	0.388	0.482	0.567
		M	10.50	Fb	0.672	0.680	0.321	0.135	-0.037	-0.194
6	2	E	8.50	Ft	0.037	0.063	0.258	0.359	0.452	0.538
		M	8.50	Fb	0.895	0.903	0.544	0.358	0.187	0.029
7	2	E	8.50	Ft	0.037	0.063	0.229	0.330	0.423	0.509
		M	8.50	Fb	0.895	0.903	0.767	0.582	0.410	0.253
8	2	E	8.50	Ft	0.013	0.034	0.200	0.301	0.394	0.480
		M	8.50	Fb	1.081	1.126	0.991	0.805	0.633	0.476
9	2	E	8.50	Ft	0.013	0.034	0.171	0.272	0.365	0.451
		M	8.50	Fb	1.081	1.126	1.214	1.028	0.857	0.699
10	2	E	8.50	Ft	-0.016	0.005	0.142	0.243	0.336	0.422
		M	8.50	Fb	1.304	1.350	1.437	1.251	1.080	0.923
11	2	E	6.50	Ft	-0.064	-0.042	0.095	0.196	0.289	0.374
		M	6.50	Fb	1.561	1.607	1.694	1.509	1.337	1.180
12	2	E	6.50	Ft	-0.064	-0.042	0.079	0.148	0.241	0.327
		M	6.50	Fb	1.561	1.607	1.780	1.766	1.594	1.437
13	2	E	6.50	Ft	-0.103	-0.090	0.031	0.101	0.194	0.279
		M	6.50	Fb	1.776	1.864	2.037	2.023	1.851	1.694
14	2	E	6.50	Ft	-0.103	-0.090	0.016	0.053	0.146	0.232
		M	6.50	Fb	1.776	1.864	2.123	2.280	2.109	1.951
15	2	E	6.50	Ft	-0.151	-0.137	-0.032	0.006	0.099	0.185
		M	6.50	Fb	2.033	2.121	2.380	2.537	2.366	2.209
16	2	E	4.50	Ft	-0.217	-0.203	-0.098	-0.060	0.033	0.119
		M	4.50	Fb	2.324	2.412	2.671	2.829	2.657	2.500
17	2	E	4.50	Ft	-0.217	-0.203	-0.098	-0.082	-0.033	0.053
		M	4.50	Fb	2.324	2.412	2.671	2.926	2.948	2.791
18	2	E	4.50	Ft	-0.272	-0.269	-0.164	-0.148	-0.099	-0.013
		M	4.50	Fb	2.567	2.704	2.962	3.217	3.239	3.082
19	2	E	4.50	Ft	-0.272	-0.269	-0.164	-0.170	-0.165	-0.079
		M	4.50	Fb	2.567	2.704	2.962	3.314	3.530	3.373
20	2	E	4.50	Ft	-0.338	-0.335	-0.230	-0.236	-0.230	-0.145
		M	4.50	Fb	2.858	2.995	3.254	3.605	3.821	3.664
21	2	E	2.50	Ft	-0.338	-0.335	-0.230	-0.236	-0.259	-0.229
		M	2.50	Fb	2.858	2.995	3.254	3.605	3.930	3.989
22	2	E	2.50	Ft	-0.422	-0.419	-0.314	-0.320	-0.343	-0.314
		M	2.50	Fb	3.183	3.320	3.579	3.930	4.255	4.314

DESIGN SUMMARY

Span: 1, Beam: 2, Interior beam

Beam type:		
	Double Tee,	Next 28D Castleton
Precast Length,	ft	68.35
Release Length,	ft	68.35
Strand Pattern:	Straight	
Strand:	6/10-270K-LL	
Strand Es,	ksi:	28500.0
No. of strands:	44	
	Draped:	0
	Straight:	44
Concrete Strength:		
	f'ci:	7.5 ksi
	f'c:	10.0 ksi
	f'ct:	10.0 ksi
Initial losses:	7.36 %	
Final losses:	14.35 %	

Specification	Allowable	Computed	Location	Status
Release Stresses (ksi) (Art. 5.9.4.1)				
Precast Bot (compression)	4.500	4.266	0.2L/0.8L	OK
Precast Top w/ no reinf. (tension)	-0.200	-0.422	Trans	
Precast Top w/ reinf. (tension)	-0.657			
Strength I (Art. 3.4.1, 5.7.3.1.1)	Provided	Required	Location	Status
Ult. Moment (k.ft)	4307.01	3280.60	Midspan	OK
Debonding Limits (Art. 5.11.4.3)	Allowable	Computed		Status
Max. Debond per Row	100.00 %	60.00 %		OK
Max. Debond Total	100.00 %	54.55 %		OK

Positive Moment Envelope Stresses (ksi) (Art. 3.4.1 and 5.9.4.2)

Specification	Allow	Final 1 Comp	Loc.	Allow	Final 2 Comp	Loc.	Allow	Final 3 Comp	Loc.
Service I Limit State - Compressive	Stresses	Only							
Precast Top	6.000	1.999	Midspan	4.500	0.590	Midspan			
Precast Bot	6.000	2.471	Transfer	4.500	3.410	0.2L/0.8L			
Service III Limit State - Tensile	Stresses	Only							
Precast Top	-0.601	-0.177	Transfer						
Precast Bot	-0.601	0.296	Midspan						
Fatigue I Limit State - Compressive	Stresses	Only							
Precast Top							4.000	1.038	0.4L/0.6L
Precast Bot							4.000	1.189	Transfer

CAMBER / DEFLECTION: (PCI Design Handbook - 4th Ed.- Table 4.6.2)
0.5 x L = 33.65 ft

	Release	Mult	Erection	Mult	Final
Prestress	3.673	1.80	6.611	2.45	8.999
Self Wt.	-1.523	1.85	-2.817	2.70	-4.111
Deck + Haunch			0.000	2.30	0.000
DL-Prec. (DC)			-0.066	3.00	-0.197
Diaphragm			0.000	3.00	0.000
DL-Prec. (DW)			0.000	3.00	0.000
DL-Comp. (DC)			-0.022	3.00	-0.066
DL-Comp. (DW)			-0.402	3.00	-1.207
Live Load	Not Included				
Total	2.151		3.305		3.419

Positive values indicate upward deflection.

LOAD RATING SUMMARY

Load Rating of Prestressed Concrete Girder Bridges
(Manual for Bridge Evaluation, 2nd Edition, with 2011 Interim)

Span:1, Beam:2
Rating Summary

Design Live Load Inventory

Load Type	Weight (tons)	Controlling Location	RF	Type	Based on	RT (tons)
H20	20.00	Bearing : 0.0	2.48	Positive	Shear	50
HL93 Design Load	-	Bearing : 0.0	1.21	Positive	Shear	-

Design Live Load Operating

Load Type	Weight (tons)	Controlling Location	RF	Type	Based on	RT (tons)
H20	20.00	Bearing : 0.0	3.21	Positive	Shear	64
HL93 Design Load	-	Bearing : 0.0	1.57	Positive	Shear	-

Legal Live Load

LRFR Article 6A.4.3.1 specifies that Legal Load Rating is not required when Inventory Design Load Rating Factor > 1.

Rating Factors	References	Values
Condition Factor	Table 6A.4.2.3-1	1.00
System Factor for Flexural Effect	Table 6A.4.2.4-1	1.00
System Factor for Shear Effect	Art. 6A.4.2.4	1.00
ADTT	Section C3.6.1.1.2	5000
Dynamic Load Factor for Design Level	Art. 6A.4.3.3	0.33
Dynamic Load Factor for Legal and Permit Level	Table C6A.4.4.3-1	0.33

For Flexural Effect: Condition Factor * System Factor = 1.00 >= 0.85 (Art. 6A.4.2.1) OK
For Shear Effect: Condition Factor * System Factor = 1.00 >= 0.85 (Art. 6A.4.2.1 and 6A.4.2.4) OK

Dead Load Factors (Table 6A.4.2.2-1)

Limit State	DC	DW
Strength I	1.25	1.50
Strength II	1.25	1.50
Service I	1.00	1.00
Service III	1.00	1.00

Design Live Load Factors (Table 6A.4.3.2.2-1)

Limit State	Inventory	Operating
Strength I	1.75	1.35
Service I	-	-
Service III	0.80	-

Legal Live Load Factors (Table 6A.4.4.2.3a-1)

Limit State	Values
Strength I	1.30
Service I	-
Service III	1.00

Allowable Stresses (ksi)

Rating Level	Concrete Compression	Concrete Tension	Steel
Design Inventory	0.60 x f'c = 6.00	0.19 x sqrt(f'c) = 0.60	0.90 x f'y = 218.70
Design Operating	0.60 x f'c = 6.00	0.19 x sqrt(f'c) = 0.60	0.90 x f'y = 218.70
Legal	0.60 x f'c = 6.00	0.19 x sqrt(f'c) = 0.60	-
Permit	0.60 x f'c = 6.00	0.19 x sqrt(f'c) = 0.60	0.90 x f'y = 218.70

Consider shear reinf. across plane (FDOT alternative): No

RATING RESULTS

A) Design Live Load Rating

Inventory Rating Level

Shear and Moment RF's are for Strength I Limit State
Tension Stress RF's are for Service III Limit State
Prestress tendon RF is for Service I Limit State

H20 Positive Live Load

Location	Moment	K	Mom-K	Shear	CTens-T	CTens-B	PSStT
Bearing : 0.0	N.A.	N.A.	N.A.	2.48	N.A.	N.A.	N.A.
Transfer : 2.5	12.48	1.00	12.48	9.23	-	22.23	5.15
Critical : 1.7	-	-	-	9.21	-	-	-
0.1L : 6.3	6.70	1.00	6.70	5.29	-	9.68	4.95
0.2L : 13.1	5.41	1.00	5.41	6.11	-	5.84	5.42
0.3L : 20.0	3.89	1.00	3.89	7.07	-	3.79	3.27
0.4L : 26.8	3.09	1.00	3.09	8.52	-	2.99	2.65
0.5L : 33.7	2.93	1.00	2.93	10.78	-	2.79	2.51
0.6L : 40.5	3.09	1.00	3.09	8.52	-	2.99	2.65
0.7L : 47.3	3.89	1.00	3.89	7.07	-	3.79	3.27
0.8L : 54.2	5.41	1.00	5.41	6.11	-	5.84	5.42
0.9L : 61.0	6.70	1.00	6.70	5.29	-	9.68	4.95
Critical : 65.6	-	-	-	9.21	-	-	-
Transfer : 64.8	12.48	1.00	12.48	9.23	-	22.23	5.15
Bearing : 67.3	N.A.	N.A.	N.A.	2.48	N.A.	N.A.	N.A.

HL93 Design Load Positive Live Load

Location	Moment	K	Mom-K	Shear	CTens-T	CTens-B	PSStT
Bearing : 0.0	N.A.	N.A.	N.A.	1.21	N.A.	N.A.	N.A.
Transfer : 2.5	6.13	1.00	6.13	4.49	-	10.93	4.49
Critical : 1.7	-	-	-	4.47	-	-	-
0.1L : 6.3	3.31	1.00	3.31	2.56	-	4.78	3.70
0.2L : 13.1	2.71	1.00	2.71	3.02	-	2.92	3.26
0.3L : 20.0	1.97	1.00	1.97	3.63	-	1.92	2.17
0.4L : 26.8	1.57	1.00	1.57	4.09	-	1.52	1.81
0.5L : 33.7	1.50	1.00	1.50	5.87	-	1.43	1.73
0.6L : 40.5	1.57	1.00	1.57	4.09	-	1.52	1.81
0.7L : 47.3	1.97	1.00	1.97	3.63	-	1.92	2.17
0.8L : 54.2	2.71	1.00	2.71	3.02	-	2.92	3.26
0.9L : 61.0	3.31	1.00	3.31	2.56	-	4.78	3.70
Critical : 65.6	-	-	-	4.47	-	-	-
Transfer : 64.8	6.13	1.00	6.13	4.49	-	10.93	4.49
Bearing : 67.3	N.A.	N.A.	N.A.	1.21	N.A.	N.A.	N.A.

Operating Rating Level

Shear and Moment RF's are for Strength I Limit State

H20 Positive Live Load

Location	Moment	K	Mom-K	Shear
Bearing : 0.0	N.A.	N.A.	N.A.	3.21
Transfer : 2.5	16.17	1.00	16.17	12.01
Critical : 1.7	-	-	-	11.98
0.1L : 6.3	8.69	1.00	8.69	6.93
0.2L : 13.1	7.02	1.00	7.02	8.04
0.3L : 20.0	5.04	1.00	5.04	9.32
0.4L : 26.8	4.00	1.00	4.00	11.24
0.5L : 33.7	3.80	1.00	3.80	14.21
0.6L : 40.5	4.00	1.00	4.00	11.24
0.7L : 47.3	5.04	1.00	5.04	9.32
0.8L : 54.2	7.02	1.00	7.02	8.04
0.9L : 61.0	8.69	1.00	8.69	6.93
Critical : 65.6	-	-	-	11.98
Transfer : 64.8	16.17	1.00	16.17	12.01
Bearing : 67.3	N.A.	N.A.	N.A.	3.21

HL93 Design Load Positive Live Load

Location	Moment	K	Mom-K	Shear
Bearing : 0.0	N.A.	N.A.	N.A.	1.57
Transfer : 2.5	7.95	1.00	7.95	5.87
Critical : 1.7	-	-	-	5.83
0.1L : 6.3	4.29	1.00	4.29	3.38
0.2L : 13.1	3.51	1.00	3.51	4.02
0.3L : 20.0	2.56	1.00	2.56	4.84
0.4L : 26.8	2.04	1.00	2.04	6.16
0.5L : 33.7	1.95	1.00	1.95	8.36
0.6L : 40.5	2.04	1.00	2.04	6.16
0.7L : 47.3	2.56	1.00	2.56	4.84
0.8L : 54.2	3.51	1.00	3.51	4.02
0.9L : 61.0	4.29	1.00	4.29	3.38
Critical : 65.6	-	-	-	5.83
Transfer : 64.8	7.95	1.00	7.95	5.87
Bearing : 67.3	N.A.	N.A.	N.A.	1.57

B) Legal Live Load Rating

Shear and Moment RF's are for Strength I Limit State
Tension Stress RF's are for Service III Limit State

3 Axle Straight Positive Live Load

Location	Moment	K	Mom-K	Shear	CTens-T	CTens-B
Bearing : 0.0	N.A.	N.A.	N.A.	2.32	N.A.	N.A.
Transfer : 2.5	11.69	1.00	11.69	8.63	-	12.38
Critical : 1.7	-	-	-	8.61	-	-
0.1L : 6.3	6.30	1.00	6.30	4.96	-	5.41
0.2L : 13.1	5.12	1.00	5.12	5.76	-	3.28
0.3L : 20.0	3.70	1.00	3.70	6.71	-	2.15
0.4L : 26.8	2.97	1.00	2.97	8.19	-	1.71
0.5L : 33.7	2.79	1.00	2.79	10.55	-	1.58
0.6L : 40.5	2.97	1.00	2.97	8.19	-	1.71
0.7L : 47.3	3.70	1.00	3.70	6.71	-	2.15
0.8L : 54.2	5.12	1.00	5.12	5.76	-	3.28
0.9L : 61.0	6.30	1.00	6.30	4.96	-	5.41
Critical : 65.6	-	-	-	8.61	-	-
Transfer : 64.8	11.69	1.00	11.69	8.63	-	12.38
Bearing : 67.3	N.A.	N.A.	N.A.	2.32	N.A.	N.A.

3S2 Positive Live Load

Location	Moment	K	Mom-K	Shear	CTens-T	CTens-B
Bearing : 0.0	N.A.	N.A.	N.A.	2.42	N.A.	N.A.
Transfer : 2.5	12.34	1.00	12.34	9.13	-	13.07
Critical : 1.7	-	-	-	9.07	-	-
0.1L : 6.3	6.76	1.00	6.76	5.36	-	5.80
0.2L : 13.1	5.71	1.00	5.71	6.51	-	3.65
0.3L : 20.0	4.16	1.00	4.16	8.08	-	2.41
0.4L : 26.8	3.34	1.00	3.34	10.78	-	1.93
0.5L : 33.7	3.31	1.00	3.31	15.32	-	1.88
0.6L : 40.5	3.34	1.00	3.34	10.78	-	1.93
0.7L : 47.3	4.16	1.00	4.16	8.08	-	2.41
0.8L : 54.2	5.71	1.00	5.71	6.51	-	3.65
0.9L : 61.0	6.76	1.00	6.76	5.36	-	5.80
Critical : 65.6	-	-	-	9.07	-	-
Transfer : 64.8	12.34	1.00	12.34	9.13	-	13.07
Bearing : 67.3	N.A.	N.A.	N.A.	2.42	N.A.	N.A.

4 Axle Straight Positive Live Load

Location	Moment	K	Mom-K	Shear	CTens-T	CTens-B
Bearing : 0.0	N.A.	N.A.	N.A.	2.08	N.A.	N.A.
Transfer : 2.5	10.50	1.00	10.50	7.74	-	11.13
Critical : 1.7	-	-	-	7.71	-	-
0.1L : 6.3	5.67	1.00	5.67	4.45	-	4.87
0.2L : 13.1	4.63	1.00	4.63	5.17	-	2.97
0.3L : 20.0	3.33	1.00	3.33	6.07	-	1.93
0.4L : 26.8	2.63	1.00	2.63	7.49	-	1.52
0.5L : 33.7	2.51	1.00	2.51	9.78	-	1.42
0.6L : 40.5	2.63	1.00	2.63	7.49	-	1.52
0.7L : 47.3	3.33	1.00	3.33	6.07	-	1.93
0.8L : 54.2	4.63	1.00	4.63	5.17	-	2.97
0.9L : 61.0	5.67	1.00	5.67	4.45	-	4.87
Critical : 65.6	-	-	-	7.71	-	-
Transfer : 64.8	10.50	1.00	10.50	7.74	-	11.13
Bearing : 67.3	N.A.	N.A.	N.A.	2.08	N.A.	N.A.

5 Axle Semi Positive Live Load

Location	Moment	K	Mom-K	Shear	CTens-T	CTens-B
Bearing : 0.0	N.A.	N.A.	N.A.	2.14	N.A.	N.A.
Transfer : 2.5	10.92	1.00	10.92	8.03	-	11.56
Critical : 1.7	-	-	-	7.99	-	-
0.1L : 6.3	5.95	1.00	5.95	4.67	-	5.10
0.2L : 13.1	4.95	1.00	4.95	5.57	-	3.17
0.3L : 20.0	3.61	1.00	3.61	6.77	-	2.09
0.4L : 26.8	2.86	1.00	2.86	8.76	-	1.65
0.5L : 33.7	2.77	1.00	2.77	12.26	-	1.57
0.6L : 40.5	2.86	1.00	2.86	8.76	-	1.65
0.7L : 47.3	3.61	1.00	3.61	6.77	-	2.09
0.8L : 54.2	4.95	1.00	4.95	5.57	-	3.17
0.9L : 61.0	5.95	1.00	5.95	4.67	-	5.10
Critical : 65.6	-	-	-	7.99	-	-
Transfer : 64.8	10.92	1.00	10.92	8.03	-	11.56
Bearing : 67.3	N.A.	N.A.	N.A.	2.14	N.A.	N.A.

6 Axle Trailer Positive Live Load

Location	Moment	K	Mom-K	Shear	CTens-T	CTens-B
Bearing : 0.0	N.A.	N.A.	N.A.	1.43	N.A.	N.A.
Transfer : 2.5	7.43	1.00	7.43	5.38	-	7.87
Critical : 1.7	-	-	-	5.33	-	-
0.1L : 6.3	4.09	1.00	4.09	3.15	-	3.51
0.2L : 13.1	3.49	1.00	3.49	3.88	-	2.23
0.3L : 20.0	2.61	1.00	2.61	4.84	-	1.51
0.4L : 26.8	2.21	1.00	2.21	6.35	-	1.27
0.5L : 33.7	2.18	1.00	2.18	8.22	-	1.24
0.6L : 40.5	2.21	1.00	2.21	6.35	-	1.27
0.7L : 47.3	2.61	1.00	2.61	4.84	-	1.51
0.8L : 54.2	3.49	1.00	3.49	3.88	-	2.23
0.9L : 61.0	4.09	1.00	4.09	3.15	-	3.51
Critical : 65.6	-	-	-	5.33	-	-
Transfer : 64.8	7.43	1.00	7.43	5.38	-	7.87
Bearing : 67.3	N.A.	N.A.	N.A.	1.43	N.A.	N.A.

Notation:
CComp-T/ CComp-B - Concrete Compression at Top/Bottom;
CTens-T/ CTens-B - Concrete Tension at Top/Bottom;
PSStT - Prestress Steel Tension.

CONSOLIDATED RATING REPORT

Load Rating of Prestressed Concrete Girder Bridges
(Manual for Bridge Evaluation, 2nd Edition, with 2011 Interim)

All Bridge

Design Live Load Inventory

Load Type	Weight (tons)	Controlling Location	Controlling Span	Controlling Beam	RF	Type	Based on	RT (tons)
H20	20.00	0.5L : 33.7	1	1	2.03	Positive	PSStT	41
HL93 Design Load	-	0.5L : 33.7	1	1	1.10	Positive	CTens-B	-

Span	Beam	Load Type	Weight (tons)	Controlling Location	RF	Type	Based on	RT (tons)
1	1	H20	20.00	0.5L : 33.7	2.03	Positive	PSStT	41
1	1	HL93 Design Load	-	0.5L : 33.7	1.10	Positive	CTens-B	-
1	2	H20	20.00	Bearing : 0.0	2.48	Positive	Shear	50
1	2	HL93 Design Load	-	Bearing : 0.0	1.21	Positive	Shear	-
1	3	H20	20.00	Bearing : 0.0	2.48	Positive	Shear	50
1	3	HL93 Design Load	-	Bearing : 0.0	1.21	Positive	Shear	-
1	4	H20	20.00	0.5L : 33.7	2.03	Positive	PSStT	41
1	4	HL93 Design Load	-	0.5L : 33.7	1.10	Positive	CTens-B	-

Design Live Load Operating

Load Type	Weight (tons)	Controlling Location	Controlling Span	Controlling Beam	RF	Type	Based on	RT (tons)
H20	20.00	0.5L : 33.7	1	1	2.85	Positive	Moment	57
HL93 Design Load	-	0.5L : 33.7	1	1	1.46	Positive	Moment	-

Span	Beam	Load Type	Weight (tons)	Controlling Location	RF	Type	Based on	RT (tons)
1	1	H20	20.00	0.5L : 33.7	2.85	Positive	Moment	57
1	1	HL93 Design Load	-	0.5L : 33.7	1.46	Positive	Moment	-
1	2	H20	20.00	Bearing : 0.0	3.21	Positive	Shear	64
1	2	HL93 Design Load	-	Bearing : 0.0	1.57	Positive	Shear	-
1	3	H20	20.00	Bearing : 0.0	3.21	Positive	Shear	64
1	3	HL93 Design Load	-	Bearing : 0.0	1.57	Positive	Shear	-
1	4	H20	20.00	0.5L : 33.7	2.85	Positive	Moment	57
1	4	HL93 Design Load	-	0.5L : 33.7	1.46	Positive	Moment	-

Legal Live Load

Load Type	Weight (tons)	Controlling Location	Controlling Span	Controlling Beam	RF	Type	Based on	RT (tons)
3 Axle Straight	30.00	0.5L : 33.7	1	1	1.21	Positive	CTens-B	36
3S2	36.00	0.5L : 33.7	1	1	1.44	Positive	CTens-B	52
4 Axle Straight	34.50	0.5L : 33.7	1	1	1.09	Positive	CTens-B	38
5 Axle Semi	38.00	0.5L : 33.7	1	1	1.20	Positive	CTens-B	46
6 Axle Trailer	68.00	0.5L : 33.7	1	1	**0.95***	Positive	CTens-B	64

Span	Beam	Load Type	Weight (tons)	Controlling Location	RF	Type	Based on	RT (tons)
1	1	3 Axle Straight	30.00	0.5L : 33.7	1.21	Positive	CTens-B	36
1	1	3S2	36.00	0.5L : 33.7	1.44	Positive	CTens-B	52
1	1	4 Axle Straight	34.50	0.5L : 33.7	1.09	Positive	CTens-B	38
1	1	5 Axle Semi	38.00	0.5L : 33.7	1.20	Positive	CTens-B	46
1	1	6 Axle Trailer	68.00	0.5L : 33.7	**0.95***	Positive	CTens-B	64
1	2	3 Axle Straight	30.00	0.5L : 33.7	1.58	Positive	CTens-B	47
1	2	3S2	36.00	0.5L : 33.7	1.88	Positive	CTens-B	68
1	2	4 Axle Straight	34.50	0.5L : 33.7	1.42	Positive	CTens-B	49
1	2	5 Axle Semi	38.00	0.5L : 33.7	1.57	Positive	CTens-B	60
1	2	6 Axle Trailer	68.00	0.5L : 33.7	1.24	Positive	CTens-B	84
1	3	3 Axle Straight	30.00	0.5L : 33.7	1.66	Positive	CTens-B	50
1	3	3S2	36.00	0.5L : 33.7	1.96	Positive	CTens-B	71
1	3	4 Axle Straight	34.50	0.5L : 33.7	1.49	Positive	CTens-B	51
1	3	5 Axle Semi	38.00	0.5L : 33.7	1.64	Positive	CTens-B	62
1	3	6 Axle Trailer	68.00	0.5L : 33.7	1.29	Positive	CTens-B	88
1	4	3 Axle Straight	30.00	0.5L : 33.7	1.21	Positive	CTens-B	36
1	4	3S2	36.00	0.5L : 33.7	1.44	Positive	CTens-B	52
1	4	4 Axle Straight	34.50	0.5L : 33.7	1.09	Positive	CTens-B	38
1	4	5 Axle Semi	38.00	0.5L : 33.7	1.20	Positive	CTens-B	46
1	4	6 Axle Trailer	68.00	0.5L : 33.7	**0.95***	Positive	CTens-B	64

Section 2.4
Conspan Outputs
Exterior Beam

PROJECT DATA

Project:	Castleton Bridge No 93
Designer:	EAF
Date:	Mar/3/2014
Checked By:	KBR
Date Checked:	Apr/10/2014
User job number:	57632
State:	Vermont, State Job, State Job #:BRF 015-2(10)
State Specification:	None
Design Code:	AASHTO LRFD - [6th Edition, 2012]
Units:	US
Span Type:	Simple Span
Flared Girder:	No
Comments:	28D NEXT Beam
File Name:	\\vtdata\projects\57632.00\tech\Bridge\Superstructure\NEXT Beam\Conspan\Castleton NEXT 28D.csl

GEOMETRY DATA

BRIDGE LAYOUT

Overall Width (ft)	35.000
Left curb (ft)	2.000
Right curb (ft)	2.000
Curb-to-curb width (ft)	31.000
Number of spans	1
Number of lanes	2
Lane width (ft)	11.000
Eff Deck thick (in)	0.000
Sacrificial thick (in)	0.000
Haunch thickness (in)	0.000
Haunch width (in)	0.000
Bridge c/s,MI(Ixx) (in4)	348368.00

SPAN DATA

Precast length,	ft =	68.350
Bearing-to-bearing,	ft =	67.300
Release span,	ft =	68.350

BEAM DATA

No	ID	Loc-prev ft	Area in2	MI(Ixx) in4	Height in	Yb in	B-topg in	B-trib ft
1	Next 28D Castleton	4.094	1361.0	87092.0	28.00	18.14	98.25	8.563
2	Next 28D Castleton	8.938	1361.0	87092.0	28.00	18.14	98.25	8.938
3	Next 28D Castleton	8.938	1361.0	87092.0	28.00	18.14	98.25	8.938
4	Next 28D Castleton	8.938	1361.0	87092.0	28.00	18.14	98.25	8.563

MATERIAL DATA - Project Level

As defined in Material Tab. For beam level properties look at Beam Specific output.

CONCRETE PROPERTIES

	Precast Release	Precast Final	C.I.P
f'c (ksi)	7.500	10.000	10.000
Wc (pcf)	150.000	150.000	150.000
Ec (ksi)	5250.270	6062.490	6062.490
K1	1.000	1.000	1.000
Thermal coeff.(1/°F)	0.00000600		

STRAND AND REBAR PROPERTIES

PRESTRESSED STEEL:

6/10-270K-LL, Low relaxation strands
Straight Pattern

Strand Diameter = 0.600 in
Tensile Strength(fpu) = 270.0 ksi
Use transformed strand and rebar: Strand Only

REINFORCING STEEL:
Tension/Shear steel: fy = 60.0 ksi Es = 29000 ksi

LOADS DATA

Loads generated using Permanent Load Wizard: NO

DEAD LOADS ON PRECAST

UNITS: (Point: kips, Location: ft, Line: klf, Trapez: klf)

Span	Beam	DC/DW	Type	Mag.1	Loc.1	Mag.2	Loc.2	Description
1	1	DC	Line	0.038	0.000	0.038	67.300	Concrete Joints
1	1	DC	Line	0.275	0.000	0.275	67.300	Concrete Curb
1	2	DC	Line	0.075	0.000	0.075	67.300	Concrete Joints
1	3	DC	Line	0.075	0.000	0.075	67.300	Concrete Joints
1	4	DC	Line	0.038	0.000	0.038	67.300	Concrete Joints
1	4	DC	Line	0.275	0.000	0.275	67.300	Concrete Curb

DIAPHRAGM LOADS - NONE

DEAD LOADS ON COMPOSITE

UNITS: (Point: kips, Location: ft, Line: klf, Trapez: klf, Area: ksf, Width: ft)

Span	DC/DW	Type	Mag.1	Loc.1/Width	Mag.2	Loc.2	Description
1	DC	Line	0.088	0.000	0.088	67.300	2 Rail Box Beam
1	DC	Line	0.012	0.000	0.012	67.300	Snow Barrier Fence
1	DW	Line	1.550	0.000	1.550	67.300	Wearing Surface
1	DW	Line	0.291	0.000	0.291	67.300	Extra Camber Tolerance

TEMPERATURE LOADS - NONE

LIVE LOADS

Live load deflection: not included.

ID	Type
Design Lane	Design Lane
Design Tandem	Design Tandem
Design Truck	Design Truck

Pedestrian Load - NONE

LIVE LOADS USED

LIVE LOAD LIBRARY: Default.cs3

1 ID: Design Lane

Description:	Design Lane as in AASHTO-LRFD
Type:	Design Lane

Lane Load:	Intensity = 0.64 klf,	Width = 10.00 ft

2 ID: Design Tandem

Description:	Design Tandem as in AASHTO-LRFD
Type:	Design Tandem

First Axle Magnitude = 25.00 k,	Wheel Spacing = 6.00 ft,	Truck Width = 10.00 ft

#	Magnitude, k	Max Spacing, ft	Min Spacing, ft	Increment, ft
1	25.00	4.00	4.00	0.00

3 ID: Design Truck

Description:	Design Truck as in AASHTO-LRFD
Type:	Design Truck

First Axle Magnitude = 8.00 k,	Wheel Spacing = 6.00 ft,	Truck Width = 10.00 ft

#	Magnitude, k	Max Spacing, ft	Min Spacing, ft	Increment, ft
1	32.00	14.00	14.00	0.00
2	32.00	30.00	14.00	2.00

4 ID: Fatigue Truck

Description:	Fatigue Truck as in AASHTO-LRFD
Type:	Fatigue Truck

First Axle Magnitude = 8.00 k,	Wheel Spacing = 6.00 ft,	Truck Width = 10.00 ft

#	Magnitude, k	Max Spacing, ft	Min Spacing, ft	Increment, ft
1	32.00	14.00	14.00	0.00
2	32.00	30.00	30.00	0.00

RATING LOADS

Design Live Load Type,	Weight (tons),	Wheel Spacing(ft)
H20	20.00	6.00
HL93 Design Load	-	-

Legal Live Load Type,	Weight (tons),	Wheel Spacing(ft)
3 Axle Straight	30.00	6.00
3S2	36.00	6.00
4 Axle Straight	34.50	6.00
5 Axle Semi	38.00	6.00
6 Axle Trailer	68.00	6.00

RATING LOADS DETAILS
Design Rating Loads:

1 ID: H20

Description:	VTrans H20
Type:	Design Truck

First Axle Magnitude = 8.00 k,	Wheel Spacing = 6.00 ft,	Truck Width = 10.00 ft

#	Magnitude, k	Max Spacing, ft	Min Spacing, ft	Increment, ft
1	32.00	14.00	14.00	0.00

2 ID: HL93 Design Load

Description:	HL93 Design Load - Internal
Type:	Design Lane + Design Truck + Design Tandem

* HL93 Internal loads:

HL93 Load ID: Design Lane *

Description:	Design Lane - Internal
Type:	Design Lane

Lane Load:	Intensity = 0.64 klf,	Width = 10.00 ft

HL93 Load ID: Design Tandem *

Description:	Design Tandem - Internal
Type:	Design Tandem

First Axle Magnitude = 25.00 k,	Wheel Spacing = 6.00 ft,	Truck Width = 10.00 ft

#	Magnitude, k	Max Spacing, ft	Min Spacing, ft	Increment, ft
1	25.00	4.00	4.00	0.00

HL93 Load ID: Design Truck *

Description:	Design Truck - Internal
Type:	Design Truck

First Axle Magnitude = 8.00 k,	Wheel Spacing = 6.00 ft,	Truck Width = 10.00 ft

#	Magnitude, k	Max Spacing, ft	Min Spacing, ft	Increment, ft
1	32.00	14.00	14.00	0.00
2	32.00	30.00	14.00	2.00

1 ID: Fatigue Truck

Description:	Fatigue Truck as in AASHTO-LRFD
Type:	Fatigue Truck

First Axle Magnitude = 8.00 k,	Wheel Spacing = 6.00 ft,	Truck Width = 10.00 ft

#	Magnitude, k	Max Spacing, ft	Min Spacing, ft	Increment, ft
1	32.00	14.00	14.00	0.00
2	32.00	30.00	30.00	0.00

3 ID: Fatigue Truck

Description:	Fatigue Truck as in AASHTO-LRFD
Type:	Fatigue Truck

First Axle Magnitude = 8.00 k,	Wheel Spacing = 6.00 ft,	Truck Width = 10.00 ft

#	Magnitude, k	Max Spacing, ft	Min Spacing, ft	Increment, ft
1	32.00	14.00	14.00	0.00
2	32.00	30.00	30.00	0.00

Legal Rating Loads:

1 ID: 3 Axle Straight

Description:	VTrans 3 Axle
Type:	Legal Truck

First Axle Magnitude = 12.00 k,	Wheel Spacing = 6.00 ft,	Truck Width = 10.00 ft

#	Magnitude, k	Max Spacing, ft	Min Spacing, ft	Increment, ft
1	24.00	15.00	15.00	0.00
2	24.00	4.00	4.00	0.00

2 ID: 3S2

Description:	VTrans 3S2
Type:	Legal Truck

First Axle Magnitude = 8.00 k,	Wheel Spacing = 6.00 ft,	Truck Width = 10.00 ft

#	Magnitude, k	Max Spacing, ft	Min Spacing, ft	Increment, ft
1	16.00	11.00	11.00	0.00
2	16.00	4.00	4.00	0.00
3	16.00	22.00	22.00	0.00
4	16.00	4.00	4.00	0.00

3 ID: 4 Axle Straight

Description:	VTrans 4 Axle
Type:	Legal Truck

First Axle Magnitude = 12.00 k,	Wheel Spacing = 6.00 ft,	Truck Width = 10.00 ft

#	Magnitude, k	Max Spacing, ft	Min Spacing, ft	Increment, ft
1	19.00	15.00	15.00	0.00
2	19.00	4.00	4.00	0.00
3	19.00	4.00	4.00	0.00

4 ID: Fatigue Truck

Description:	Fatigue Truck as in AASHTO-LRFD
Type:	Fatigue Truck

First Axle Magnitude = 8.00 k,	Wheel Spacing = 6.00 ft,	Truck Width = 10.00 ft

#	Magnitude, k	Max Spacing, ft	Min Spacing, ft	Increment, ft
1	32.00	14.00	14.00	0.00
2	32.00	30.00	30.00	0.00

ANALYSIS DATA

ANALYSIS PARAMETERS DATA

Truck impact:	1.330
Lane impact:	1.000
Strength II impact:	1.330
Fatigue impact:	1.150

DISTRIBUTION FACTORS (Art. 4.6.2.2):

Include sacrificial deck thick in ts:	NO
Is Span Post-tensioned:	NO
ADTT (Average Daily Truck Traffic) :	5000
Percent of the specified force effect :	1.00
Apply reduction of Moment for skew:	YES

NOTE: Beam specific dead and live load DFs are printed in beam level reports.

LOAD FACTORS: (Table 3.4.1-1 & 3.4.1-2)

	Live	DC(max)	DC(min)	DW(max)	DW(min)
Service I:	1.00	1.00	-	1.00	-
Service III:	0.80	1.00	-	1.00	-
Strength I:	1.75	1.25	0.90	1.50	0.65
Fatigue I:	1.50	-	-	-	-

Ductility Factor:	1.00
Redundancy Factor:	1.00
Importance Factor:	1.00

PROJECT DESIGN PARAMETERS

MULTIPLIERS:

Trans len mult:	Bonded	1.00
	Debonded	1.00
Dev len mult:	Bonded	1.60
	Debonded	2.00

Camber & Deflection Multiplier (PCI ref.)

	Erection	Final
Prestress:	1.80	2.45
Self. Wt:	1.85	2.70
Deck + Haunch:		2.30
Diaphragm:		3.00
DL-Prec.:		3.00
DL-Comp.:		3.00

MOMENT AND SHEAR PROVISIONS:

Ultimate Moment Capacity, Mr-prvd computed:	Strain Compatibility method.
Ultimate Concrete Strain:	0.0030
Horizontal Shear, Beam and Slab effects in Vu:	EXCLUDED

STRESS LIMITS (Art. 5.9.4):
STRESS LIMITS AT RELEASE BEFORE LOSSES:

		PRECAST	
Strength		7.50	ksi
Elasticity		5250.3	ksi
Max comp		4.50	ksi
Max tens		-0.20	ksi
Max tens,	w/reinf	-0.66	ksi

STRESS LIMITS AT FINAL AFTER LOSSES:

	PRECAST		DECK	
Strength	10.00	ksi	10.00	ksi
Elasticity	6062.49	ksi	6062.49	ksi

STRESS LIMITS AT FINAL 1 (P/S + DL + LL):

	PRECAST		DECK	
Max comp	6.00	ksi	6.00	ksi

STRESS LIMITS AT FINAL 2 (P/S + DL):

	PRECAST		DECK	
Max comp	4.50	ksi	4.50	ksi

FATIGUE I STRESS LIMITS AT FINAL 3 (50% P/S + 50% DL + F_LL) (Art. 5.5.3.1):

	PRECAST		DECK	
Max comp	4.00	ksi	-	ksi

SERVICE III (Tension):

	PRECAST		DECK	
Max tens	-0.60	ksi	-0.60	ksi

RESISTANCE FACTORS (Art. 5.5.4.2):

Flexure Reinforced	
Compression controlled sections	0.75
Tension controlled sections	0.90
Flexure Prestressed	
Compression controlled sections	0.75
Tension controlled sections	1.00
Shear	0.90

PRESTRESS LOSSES:

Time Dependent Losses, Approximate Method (Art.5.9.5.3)
Days to release = 0.75
Rel. Humid.(RH) = 75.0 %

RATING PARAMETERS

Rating Factors	References	Values
Condition Factor	Table 6A.4.2.3-1	1.00
System Factor for Flexural Effect	Table 6A.4.2.4-1	1.00
System Factor for Shear Effect	Art. 6A.4.2.4	1.00
ADTT	Section C3.6.1.1.2	5000
Dynamic Load Factor for Design Level	Art. 6A.4.3.3	0.33
Dynamic Load Factor for Legal and Permit Level	Table C6A.4.4.3-1	0.33

For Flexural Effect: Condition Factor * System Factor = 1.00 >= 0.85 (Art. 6A.4.2.1) OK
For Shear Effect: Condition Factor * System Factor = 1.00 >= 0.85 (Art. 6A.4.2.1 and 6A.4.2.4) OK

Dead Load Factors (Table 6A.4.2.2-1)

Limit State	DC	DW
Strength I	1.25	1.50
Strength II	1.25	1.50
Service I	1.00	1.00
Service III	1.00	1.00

Design Live Load Factors (Table 6A.4.3.2.2-1)

Limit State	Inventory	Operating
Strength I	1.75	1.35
Service I	-	-
Service III	0.80	-

Legal Live Load Factors (Table 6A.4.4.2.3a-1)

Limit State	Values
Strength I	1.30
Service I	-
Service III	1.00

Allowable Stresses (ksi)

Rating Level	Concrete Compression	Concrete Tension	Steel
Design Inventory	0.60 x f'c = 6.00	0.19 x sqrt(f'c) = 0.60	0.90 x f'y = 218.70
Design Operating	0.60 x f'c = 6.00	0.19 x sqrt(f'c) = 0.60	0.90 x f'y = 218.70
Legal	0.60 x f'c = 6.00	0.19 x sqrt(f'c) = 0.60	-
Permit	0.60 x f'c = 6.00	0.19 x sqrt(f'c) = 0.60	0.90 x f'y = 218.70

Consider shear reinf. across plane (FDOT alternative): No

BEAM REINFORCEMENT

BEAM SPECIFIC MATERIAL PROPERTIES:

Span#, Beam#	Tendon-ID	Girder-f'ci ksi	Girder-f'c ksi	Deck-f'c ksi
Span:1, Beam:1	6/10-270K-LL	7.50	10.00	10.00
Span:1, Beam:2	6/10-270K-LL	7.50	10.00	10.00
Span:1, Beam:3	6/10-270K-LL	7.50	10.00	10.00
Span:1, Beam:4	6/10-270K-LL	7.50	10.00	10.00

Span:1, Beam:1

PRESTRESSED STEEL:

44 strands, 6/10-270K-LL, Low relaxation strands
Straight Pattern

END PATTERN (Ycg = 6.68 in):

6 @ 2.500 in 8 @ 10.500 in	10 @ 4.500 in	10 @ 6.500 in	10 @ 8.500 in

REINFORCING STEEL:

Tension	steel:	
fy	60.0	ksi
Es	29000	ksi

Stirrups:

# legs	Size	fy (ksi)	Area (in2)	Spacing (in)	Start (ft)	End (ft)	Extends into Deck
4	US#4[M13]	60.0	0.80	3.00	0.0000	4.0000	No
4	US#4[M13]	60.0	0.80	9.00	4.0000	64.3501	No
4	US#4[M13]	60.0	0.80	3.00	64.3501	68.3501	No

Top Steel:

#bars	Size	Dist. from Top (in)	Area (in2)	Start (ft)	End (ft)	Side Cover (in)
11	US#5[M16]	2.50	3.410	0.5000	67.8500	3.00
11	US#5[M16]	6.25	3.410	0.5000	67.8500	3.00

Bottom Steel:

#bars	Size	Dist. from Top (in)	Area (in2)	Start (ft)	End (ft)	Side Cover (in)

Span:1, Beam:2

PRESTRESSED STEEL:
44 strands, 6/10-270K-LL, Low relaxation strands
Straight Pattern

END PATTERN (Ycg = 6.68 in):

6 @ 2.500 in 8 @ 10.500 in	10 @ 4.500 in	10 @ 6.500 in	10 @ 8.500 in

REINFORCING STEEL:

Tension	steel:	
fy	60.0	ksi
Es	29000	ksi

Stirrups:

# legs	Size	fy (ksi)	Area (in2)	Spacing (in)	Start (ft)	End (ft)	Extends into Deck
4	US#4[M13]	60.0	0.80	3.00	0.0000	4.0000	No
4	US#4[M13]	60.0	0.80	9.00	4.0000	64.3501	No
4	US#4[M13]	60.0	0.80	3.00	64.3501	68.3501	No

Top Steel:

#bars	Size	Dist. from Top (in)	Area (in2)	Start (ft)	End (ft)	Side Cover (in)
11	US#5[M16]	2.50	3.410	0.5000	67.8500	3.00
11	US#5[M16]	6.25	3.410	0.5000	67.8500	3.00

Bottom Steel:

#bars	Size	Dist. from Top (in)	Area (in2)	Start (ft)	End (ft)	Side Cover (in)

Span:1, Beam:3

PRESTRESSED STEEL:
44 strands, 6/10-270K-LL, Low relaxation strands
Straight Pattern

END PATTERN (Ycg = 6.68 in):

6 @ 2.500 in 8 @ 10.500 in	10 @ 4.500 in	10 @ 6.500 in	10 @ 8.500 in

REINFORCING STEEL:

Tension	steel:	
fy	60.0	ksi
Es	29000	ksi

Stirrups:

# legs	Size	fy (ksi)	Area (in2)	Spacing (in)	Start (ft)	End (ft)	Extends into Deck
4	US#4[M13]	60.0	0.80	3.00	0.0000	4.0000	No
4	US#4[M13]	60.0	0.80	9.00	4.0000	64.3501	No
4	US#4[M13]	60.0	0.80	3.00	64.3501	68.3501	No

Top Steel:

#bars	Size	Dist. from Top (in)	Area (in2)	Start (ft)	End (ft)	Side Cover (in)
11	US#5[M16]	2.50	3.410	0.5000	67.8500	3.00
11	US#5[M16]	6.25	3.410	0.5000	67.8500	3.00

Bottom Steel:

#bars	Size	Dist. from Top (in)	Area (in2)	Start (ft)	End (ft)	Side Cover (in)

Span:1, Beam:4

PRESTRESSED STEEL:
44 strands, 6/10-270K-LL, Low relaxation strands
Straight Pattern

END PATTERN (Ycg = 6.68 in):

6 @ 2.500 in 8 @ 10.500 in	10 @ 4.500 in	10 @ 6.500 in	10 @ 8.500 in

REINFORCING STEEL:

Tension	steel:	
fy	60.0	ksi
Es	29000	ksi

Stirrups:

# legs	Size	fy (ksi)	Area (in2)	Spacing (in)	Start (ft)	End (ft)	Extends into Deck
4	US#4[M13]	60.0	0.80	3.00	0.0000	4.0000	No
4	US#4[M13]	60.0	0.80	9.00	4.0000	64.3501	No
4	US#4[M13]	60.0	0.80	3.00	64.3501	68.3501	No

Top Steel:

#bars	Size	Dist. from Top (in)	Area (in2)	Start (ft)	End (ft)	Side Cover (in)
11	US#5[M16]	2.50	3.410	0.5000	69.6000	3.00
11	US#5[M16]	6.25	3.410	0.5000	69.6000	3.00

Bottom Steel:

#bars	Size	Dist. from Top (in)	Area (in2)	Start (ft)	End (ft)	Side Cover (in)

PROPERTIES

Span:1, Beam:1

PRECAST DATA:

Section Id	Next 28D Castleton		
Type	Double Tee		
Flng width	Top	98.250	in
thick	Top	8.000	in
Stems	No	2	
	Top	15.000	in
	Bot	13.750	in
Shear width		28.750	in

Minimum Thickness Criteria, Article 5.14.1.2.2 checked: OK.

GENERAL BRIDGE DATA:

Bridge Width	35.00	ft
Curb-to-curb	31.00	ft
Beam Spac. Lt./Rt	4.09/ 8.94	ft
Lane width	11.00	ft
Number of lanes	2	
Interior/Exterior	Exterior	
Start Skew Angle	-18.00	degrees
End Skew Angle	-18.00	degrees

TOPPING DATA:

Effective Deck	Thickness	0.000	in	
Sacrificial Deck	Thickness	0.000	in	
Haunch:				
	Thickness	0.000	in	
	Width	0.000	in	
Effective	width	102.750	in	(Art. 4.6.2.6.1)

GENERAL LOAD DATA:

DEAD LOADS ON PRECAST

UNITS: (Point: kips, Location: ft, Line: klf, Trapez: klf)

DC/DW	Type	Mag.1	Loc.1	Mag.2	Loc.2	Description
DC	Line	0.038	0.000	0.038	67.300	Concrete Joints
DC	Line	0.275	0.000	0.275	67.300	Concrete Curb

Dead loads on composite: See Project info for composite loads

GENERAL SPAN DATA:

Overall length	68.350	ft
Release length	68.350	ft
Design length	67.300	ft

KERN POINTS:

Upper	21.67	in
Lower	11.65	in

DISTRIBUTION FACTORS (Art. 4.6.2.2):
Type i, not post-tensioned

Live Moment	(2+ lanes loaded)	0.489	(Manual input)	
Live Moment	(1 lane loaded)	0.810	(Manual input)	
Live Shear	(2+ lanes loaded)	0.537	(Manual input)	
Live Shear	(1 lane loaded)	0.884	(Manual input)	

The LL distribution computation is using the effective slab depth (ts = 0.00in).
The LL distribution computation is using the effective slab depth (ts = 0.00in).
The moment reduction factor for skew is applied.

Pedestrian	0.000	(Manual input)
Comp. DC	0.250	(Calculated)
Comp. DW	0.250	(Calculated)

Dead Loads distributed equally to all beams
RESISTANCE FACTORS (Art. 5.5.4.2):

Flexure Reinforced	
Compression controlled sections	0.75
Tension controlled sections	0.90
Flexure Prestressed	
Compression controlled sections	0.75
Tension controlled sections	1.00
Shear	0.90

SECTION PROPERTIES:

	PRECAST		COMPOSITE		
Area	1361.0	in2	1361.0	in2	#
Total Height	28.00	in	28.00	in	
Mom. of Inertia (Ixx)	87092	in4	87092	in4	#
Ht. of c.g.	18.14	in	18.14	in	#
Density	150.00	pcf	150.00	pcf	
Self-weight	1417.7	plf	1417.7	plf	
Mom. of Inertia (Iyy)	1159700.1	in4			
Poisson's Ratio	0.2				
Thermal Coeff.	0.000006000	1/°F			

(#) Of Total Section using Ect/Ec = 1.0000
Use transformed strand and rebar: No

Span:1, Beam:1
STRESS LIMITS (Art. 5.9.4):
STRESS LIMITS AT RELEASE BEFORE LOSSES:

		PRECAST	
Strength		7.50	ksi
Elasticity		5250.3	ksi
Max comp		4.50	ksi
Max tens		-0.20	ksi
Max tens,	w/reinf	-0.66	ksi

STRESS LIMITS AT FINAL AFTER LOSSES:

	PRECAST		DECK	
Strength	10.00	ksi	10.00	ksi
Elasticity	6062.49	ksi	6062.49	ksi

STRESS LIMITS AT FINAL 1 (P/S + DL + LL):

	PRECAST		DECK	
Max comp	6.00	ksi	6.00	ksi

STRESS LIMITS AT FINAL 2 (P/S + DL):

	PRECAST		DECK	
Max comp	4.50	ksi	4.50	ksi

FATIGUE I STRESS LIMITS AT FINAL 3 (50% P/S + 50% DL + F_LL) (Art. 5.5.3.1):

	PRECAST		DECK	
Max comp	4.00	ksi	-	ksi

SERVICE III (Tension):

	PRECAST		DECK	
Max tens	-0.60	ksi	-0.60	ksi

Span:1, Beam:1
PRESTRESSED STEEL:
44 strands, 6/10-270K-LL, Low relaxation strands
Straight Pattern

END PATTERN (Ycg = 6.68 in):

6 @ 2.500 in 8 @ 10.500 in	10 @ 4.500 in	10 @ 6.500 in	10 @ 8.500 in

SHIELDING AND REDUCED INITIAL PULLS:

Group	Strands	End	Heights	Mid		End		Shielding	Mid		Distance to center		Initial Frac	Pull Pull/Str	
3	2	10.500	in	10.500	in	0.50	ft	*	0.00	ft	25.000	in	75.0 %	43.9	kips
4	2	10.500	in	10.500	in	0.50	ft	*	0.00	ft	27.000	in	75.0 %	43.9	kips
7	2	8.500	in	8.500	in	4.00	ft		0.00	ft	25.000	in	75.0 %	43.9	kips
8	2	8.500	in	8.500	in	0.50	ft	*	0.00	ft	27.000	in	75.0 %	43.9	kips
9	2	8.500	in	8.500	in	4.00	ft		0.00	ft	29.000	in	75.0 %	43.9	kips
12	2	6.500	in	6.500	in	6.00	ft		0.00	ft	25.000	in	75.0 %	43.9	kips
13	2	6.500	in	6.500	in	0.50	ft	*	0.00	ft	27.000	in	75.0 %	43.9	kips
14	2	6.500	in	6.500	in	6.00	ft		0.00	ft	29.000	in	75.0 %	43.9	kips
17	2	4.500	in	4.500	in	8.00	ft		0.00	ft	25.000	in	75.0 %	43.9	kips
18	2	4.500	in	4.500	in	0.50	ft	*	0.00	ft	27.000	in	75.0 %	43.9	kips
19	2	4.500	in	4.500	in	8.00	ft		0.00	ft	29.000	in	75.0 %	43.9	kips
21	2	2.500	in	2.500	in	10.00	ft		0.00	ft	27.000	in	75.0 %	43.9	kips

Check for Art. 5.11.4.3: NG; there are 24 strands end debonded, of which:
* 10 have same 0.50 ft debond termination distance.

Strand Diameter	0.600	in
Strand Area	0.217	in2
Total Strand Area	9.548	in2
Trans. Len,bonded	3.000	ft
Trans. Len,debonded	3.000	ft
Dev. Len, bonded	10.749	ft
Dev. Len, debonded	13.437	ft
Holddown Force	0.000	kips
Tensile Strength(fpu)	270.0	ksi
Initial Prestress = 0.75fpu	202.5	ksi
Initial Pull	1933.5	kips
Beam Shrtng (PL/AE)	0.206	in

Span:1, Beam:1

ESTIMATED QUANTITIES

Prestressing (linear ft)	Strands (LB/1000ft)	(LB)	Beam Vol(C.Y.)	Concrete Wt(LB)	Stirrups (LB)	Longitudinal Bars (LB)
3007.400	740	2225.476	23.926	96900.578	711.495	1563.177

Span:1, Beam:1
REINFORCING STEEL:

Tension	steel:	
fy	60.0	ksi
Es	29000	ksi

Stirrups:

# legs	Size	fy (ksi)	Area (in2)	Spacing (in)	Start (ft)	End (ft)	Extends into Deck
4	US#4[M13]	60.0	0.80	3.00	0.0000	4.0000	No
4	US#4[M13]	60.0	0.80	9.00	4.0000	64.3501	No
4	US#4[M13]	60.0	0.80	3.00	64.3501	68.3501	No

Top Steel:

#bars	Size	Dist. from Top (in)	Area (in2)	Start (ft)	End (ft)	Side Cover (in)
11	US#5[M16]	2.50	3.410	0.5000	67.8500	3.00
11	US#5[M16]	6.25	3.410	0.5000	67.8500	3.00

Bottom Steel:

#bars	Size	Dist. from Top (in)	Area (in2)	Start (ft)	End (ft)	Side Cover (in)

LOSSES

Note: Values are calculated at Midspan

Str. area	9.5480	in2
Ycg	6.68	in
P_init	1933.5	kips
Ecc	11.46	in
Days to release	0.75	
Rel. Humid.(RH)	75.0	%
Es	28500.0	ksi
Eci	5250	ksi

AASHTO LOSSES

Elastic Shortening 14.91 ksi (Eq 5.9.5.2.3a-1), (fcgp= 2.747 ksi)

	Elastic Gains		Gains			Adjustment	
due	to Precast Loads		-1.32	ksi		0.12	ksi
due	to Composite Loads		-2.04	ksi		0.19	ksi
due	to Live Loads		-7.70	ksi		0.88	ksi

Time Dependent Losses (Approximate Method (Art.5.9.5.3))

		Initial			Final		
Steel relaxation	0.00	ksi			2.40	ksi	(Eq 5.9.5.3-1)
Concrete shrinkage	0.00	ksi			6.71	ksi	(Eq 5.9.5.3-1)
Concrete creep	0.00	ksi			7.94	ksi	(Eq 5.9.5.3-1)
Sub-total	14.91	ksi	(7.36 %)		7.18	ksi	(3.54 %)
Total Prestress Losses					22.09	ksi	(10.91 %)

Prestressing Stress Limit Check (Table 5.9.3.1)

initial fpi = 202.5 ksi < 0.75 fpu, OK

initial fpe = 180.4 ksi < 0.80 fpy, OK

SHEAR/MOMENT ENVELOPE (&REACTIONS)

SHEAR AND MOMENT ENVELOPE : Span : 1, Beam : 1, SERVICE I
Shears: kips, Moments: kft

		Bearing	Trans	H/2	0.10L	0.20L	0.30L	0.40L	Midspan
Location,	ft	0.00	2.48	1.17	6.31	13.15	19.98	26.82	33.65
Self wt. :	M	0.0	113.7	54.7	272.8	504.6	670.2	769.5	802.7
(Max)	V	47.7	44.2	46.1	38.8	29.1	19.4	9.7	0.0
DL-Prec. :	M	-0.0	25.1	12.1	60.2	111.4	148.0	169.9	177.2
DC(Max)	V	10.5	9.8	10.2	8.6	6.4	4.3	2.1	0.0
DL-Prec. :	M	0.0	0.0	0.0	0.0	0.0	0.0	0.0	0.0
DW(Max)	V	0.0	0.0	0.0	0.0	0.0	0.0	0.0	0.0
Deck + :	M	0.0	0.0	0.0	0.0	0.0	0.0	0.0	0.0
Haunch (Max)	V	0.0	0.0	0.0	0.0	0.0	0.0	0.0	0.0
Diaphragm :	M	0.0	0.0	0.0	0.0	0.0	0.0	0.0	0.0
(Max)	V	0.0	0.0	0.0	0.0	0.0	0.0	0.0	0.0
DL-Comp :	M	0.0	2.0	1.0	4.8	8.9	11.8	13.6	14.2
DC(Max)	V	0.8	0.8	0.8	0.7	0.5	0.3	0.2	0.0
DL-Comp :	M	0.0	36.9	17.8	88.6	163.8	217.6	249.8	260.6
DW(Max)	V	15.5	14.3	15.0	12.6	9.4	6.3	3.1	0.0
LL + I :	M+	0.0	198.5	95.7	472.4	859.2	1116.0	1265.4	1296.9
	V	91.9	87.2	89.7	79.9	30.6	18.3	39.4	27.1
LL + I :	M-	0.0	0.0	0.0	0.0	0.0	0.0	0.0	0.0
	V	0.0	0.0	0.0	0.0	0.0	0.0	0.0	0.0
LL + I :	Vmx	91.9	87.2	89.7	79.9	68.2	56.8	45.9	35.3
	M	0.0	202.5	98.2	472.4	821.0	1040.7	1127.9	1089.8
Total :	M+	0.0	376.2	181.2	898.8	1648.0	2163.6	2468.2	2551.5
	V	166.5	156.3	161.7	140.5	76.1	48.6	54.5	27.1
Total :	M-	0.0	0.0	0.0	0.0	0.0	0.0	0.0	0.0
	V	0.0	0.0	0.0	0.0	0.0	0.0	0.0	0.0
Total :	Vmx	166.5	156.3	161.7	140.5	113.6	87.1	61.1	35.3
	M	0.0	380.3	183.7	898.8	1609.8	2088.2	2330.7	2344.4

		0.60L	0.70L	0.80L	0.90L	H/2	Trans	Bearing
Location,	ft	40.49	47.32	54.16	60.99	66.13	64.83	67.30
Self wt. :	M	769.5	670.2	504.6	272.8	54.7	113.7	0.0
(Max)	V	9.7	19.4	29.1	38.8	46.1	44.2	47.7
DL-Prec. :	M	169.9	148.0	111.4	60.2	12.1	25.1	-0.0
DC(Max)	V	2.1	4.3	6.4	8.6	10.2	9.8	10.5
DL-Prec. :	M	0.0	0.0	0.0	0.0	0.0	0.0	0.0
DW(Max)	V	0.0	0.0	0.0	0.0	0.0	0.0	0.0
Deck + :	M	0.0	0.0	0.0	0.0	0.0	0.0	0.0
Haunch (Max)	V	0.0	0.0	0.0	0.0	0.0	0.0	0.0
Diaphragm :	M	0.0	0.0	0.0	0.0	0.0	0.0	0.0
(Max)	V	0.0	0.0	0.0	0.0	0.0	0.0	0.0
DL-Comp :	M	13.6	11.8	8.9	4.8	1.0	2.0	-0.0
DC(Max)	V	0.2	0.3	0.5	0.7	0.8	0.8	0.8
DL-Comp :	M	249.8	217.6	163.8	88.6	17.8	36.9	-0.0
DW(Max)	V	3.1	6.3	9.4	12.6	15.0	14.3	15.5
LL + I :	M+	1265.4	1116.0	859.2	472.4	95.7	198.5	0.0
	V	39.4	18.3	30.6	79.9	89.7	87.2	91.9
LL + I :	M-	0.0	0.0	0.0	0.0	-0.0	-0.0	-0.0
	V	0.0	0.0	0.0	0.0	0.0	0.0	0.0
LL + I :	Vmx	45.9	56.8	68.2	79.9	89.7	87.2	91.9
	M	1127.9	1040.7	821.0	472.4	98.2	202.5	0.0
Total :	M+	2468.2	2163.6	1648.0	898.8	181.2	376.2	0.0
	V	54.5	48.6	76.1	140.5	161.7	156.3	166.5
Total :	M-	0.0	0.0	0.0	0.0	0.0	0.0	0.0
	V	0.0	0.0	0.0	0.0	0.0	0.0	0.0
Total :	Vmx	61.1	87.1	113.6	140.5	161.7	156.3	166.5
	M	2330.7	2088.2	1609.8	898.8	183.7	380.3	0.0

REACTIONS (kips), SERVICE I

Load Type		Left Support	Right Support
Self Wt.		47.7	47.7
Deck+Haunch		0.0	0.0
Diaphragm		0.0	0.0
DL-Prec.(DC)		10.5	10.5
DL-Prec.(DW)		0.0	0.0
DL-Comp.(DC)		3.4	3.4
DL-Comp.(DW)		61.9	61.9
Live		83.6	83.6
Pedestrian		0.0	0.0

Upward reactions are positive.
Live Load reactions are per lane with no distribution factor and no impact.
Reactions are not multiplied by Load Modifiers (ductility, redundancy and operational importance).
Non-composite load types are per beam.
Composite and Pedestrian load types are per total bridge width.

SHEAR AND MOMENT ENVELOPE : Span : 1, Beam : 1, SERVICE III
Shears: kips, Moments: kft

		Bearing	Trans	H/2	0.10L	0.20L	0.30L	0.40L	Midspan
Location,	ft	0.00	2.48	1.17	6.31	13.15	19.98	26.82	33.65
Self wt. :	M	0.0	113.7	54.7	272.8	504.6	670.2	769.5	802.7
(Max)	V	47.7	44.2	46.1	38.8	29.1	19.4	9.7	0.0
DL-Prec. :	M	-0.0	25.1	12.1	60.2	111.4	148.0	169.9	177.2
DC(Max)	V	10.5	9.8	10.2	8.6	6.4	4.3	2.1	0.0
DL-Prec. :	M	0.0	0.0	0.0	0.0	0.0	0.0	0.0	0.0
DW(Max)	V	0.0	0.0	0.0	0.0	0.0	0.0	0.0	0.0
Deck + :	M	0.0	0.0	0.0	0.0	0.0	0.0	0.0	0.0
Haunch (Max)	V	0.0	0.0	0.0	0.0	0.0	0.0	0.0	0.0
Diaphragm :	M	0.0	0.0	0.0	0.0	0.0	0.0	0.0	0.0
(Max)	V	0.0	0.0	0.0	0.0	0.0	0.0	0.0	0.0
DL-Comp :	M	0.0	2.0	1.0	4.8	8.9	11.8	13.6	14.2
DC(Max)	V	0.8	0.8	0.8	0.7	0.5	0.3	0.2	0.0
DL-Comp :	M	0.0	36.9	17.8	88.6	163.8	217.6	249.8	260.6
DW(Max)	V	15.5	14.3	15.0	12.6	9.4	6.3	3.1	0.0
LL + I :	M+	0.0	158.8	76.5	377.9	687.4	892.8	1012.3	1037.5
	V	73.6	69.8	71.8	63.9	24.5	14.6	31.5	21.6
LL + I :	M-	0.0	0.0	0.0	0.0	0.0	0.0	0.0	0.0
	V	0.0	0.0	0.0	0.0	0.0	0.0	0.0	0.0
LL + I :	Vmx	73.6	69.8	71.8	63.9	54.5	45.5	36.7	28.3
	M	0.0	162.0	78.6	377.9	656.8	832.6	902.3	871.9
Total :	M+	0.0	336.5	162.0	804.3	1476.1	1940.4	2215.1	2292.1
	V	148.1	138.9	143.8	124.5	69.9	44.9	46.7	21.6
Total :	M-	0.0	0.0	0.0	0.0	0.0	0.0	0.0	0.0
	V	0.0	0.0	0.0	0.0	0.0	0.0	0.0	0.0
Total :	Vmx	148.1	138.9	143.8	124.5	100.0	75.8	51.9	28.3
	M	0.0	339.8	164.1	804.3	1445.6	1880.1	2105.1	2126.4

		0.60L	0.70L	0.80L	0.90L	H/2	Trans	Bearing
Location,	ft	40.49	47.32	54.16	60.99	66.13	64.83	67.30
Self wt. :	M	769.5	670.2	504.6	272.8	54.7	113.7	0.0
(Max)	V	9.7	19.4	29.1	38.8	46.1	44.2	47.7
DL-Prec. :	M	169.9	148.0	111.4	60.2	12.1	25.1	-0.0
DC(Max)	V	2.1	4.3	6.4	8.6	10.2	9.8	10.5
DL-Prec. :	M	0.0	0.0	0.0	0.0	0.0	0.0	0.0
DW(Max)	V	0.0	0.0	0.0	0.0	0.0	0.0	0.0
Deck + :	M	0.0	0.0	0.0	0.0	0.0	0.0	0.0
Haunch (Max)	V	0.0	0.0	0.0	0.0	0.0	0.0	0.0
Diaphragm :	M	0.0	0.0	0.0	0.0	0.0	0.0	0.0
(Max)	V	0.0	0.0	0.0	0.0	0.0	0.0	0.0
DL-Comp :	M	13.6	11.8	8.9	4.8	1.0	2.0	-0.0
DC(Max)	V	0.2	0.3	0.5	0.7	0.8	0.8	0.8
DL-Comp :	M	249.8	217.6	163.8	88.6	17.8	36.9	-0.0
DW(Max)	V	3.1	6.3	9.4	12.6	15.0	14.3	15.5
LL + I :	M+	1012.3	892.8	687.4	377.9	76.5	158.8	0.0
	V	31.5	14.6	24.5	63.9	71.8	69.8	73.6
LL + I :	M-	0.0	0.0	0.0	0.0	-0.0	-0.0	-0.0
	V	0.0	0.0	0.0	0.0	0.0	0.0	0.0
LL + I :	Vmx	36.7	45.5	54.5	63.9	71.8	69.8	73.6
	M	902.3	832.6	656.8	377.9	78.6	162.0	0.0
Total :	M+	2215.1	1940.4	1476.1	804.3	162.0	336.5	0.0
	V	46.7	44.9	69.9	124.5	143.8	138.9	148.1
Total :	M-	0.0	0.0	0.0	0.0	0.0	0.0	0.0
	V	0.0	0.0	0.0	0.0	0.0	0.0	0.0
Total :	Vmx	51.9	75.8	100.0	124.5	143.8	138.9	148.1
	M	2105.1	1880.1	1445.6	804.3	164.1	339.8	0.0

SHEAR AND MOMENT ENVELOPE : Span : 1, Beam : 1, STRENGTH I
Shears: kips, Moments: kft

		Bearing	Trans	H/2	0.10L	0.20L	0.30L	0.40L	Midspan
Location,	ft	0.00	2.48	1.17	6.31	13.15	19.98	26.82	33.65
Self wt. :	M	0.0	142.2	68.4	341.0	630.8	837.7	961.9	1003.3
(Max)	V	59.6	55.2	57.6	48.5	36.3	24.2	12.1	0.0
Self wt. :	M	0.0	102.4	49.2	245.5	454.1	603.2	692.6	722.4
(Min)	V	42.9	39.8	41.4	34.9	26.2	17.4	8.7	0.0
DL-Prec. :	M	-0.0	31.4	15.1	75.3	139.3	185.0	212.4	221.5
DC(Max)	V	13.2	12.2	12.7	10.7	8.0	5.3	2.7	0.0
DL-Prec. :	M	-0.0	22.6	10.9	54.2	100.3	133.2	152.9	159.5
DC(Min)	V	9.5	8.8	9.2	7.7	5.8	3.9	1.9	0.0
DL-Prec. :	M	0.0	0.0	0.0	0.0	0.0	0.0	0.0	0.0
DW(Max)	V	0.0	0.0	0.0	0.0	0.0	0.0	0.0	0.0
DL-Prec. :	M	0.0	0.0	0.0	0.0	0.0	0.0	0.0	0.0
DW(Min)	V	0.0	0.0	0.0	0.0	0.0	0.0	0.0	0.0
Deck + :	M	0.0	0.0	0.0	0.0	0.0	0.0	0.0	0.0
Haunch (Max)	V	0.0	0.0	0.0	0.0	0.0	0.0	0.0	0.0
Deck + :	M	0.0	0.0	0.0	0.0	0.0	0.0	0.0	0.0
Haunch (Min)	V	0.0	0.0	0.0	0.0	0.0	0.0	0.0	0.0
Diaphragm :	M	0.0	0.0	0.0	0.0	0.0	0.0	0.0	0.0
(Max)	V	0.0	0.0	0.0	0.0	0.0	0.0	0.0	0.0
Diaphragm :	M	0.0	0.0	0.0	0.0	0.0	0.0	0.0	0.0
(Min)	V	0.0	0.0	0.0	0.0	0.0	0.0	0.0	0.0
DL-Comp :	M	0.0	2.5	1.2	6.0	11.1	14.8	17.0	17.7
DC(Max)	V	1.1	1.0	1.0	0.9	0.6	0.4	0.2	0.0
DL-Comp :	M	0.0	1.8	0.9	4.3	8.0	10.6	12.2	12.7
DC(Min)	V	0.8	0.7	0.7	0.6	0.5	0.3	0.2	0.0
DL-Comp :	M	0.0	55.4	26.6	132.8	245.7	326.4	374.7	390.9
DW(Max)	V	23.2	21.5	22.4	18.9	14.2	9.4	4.7	0.0
DL-Comp :	M	0.0	24.0	11.5	57.6	106.5	141.4	162.4	169.4
DW(Min)	V	10.1	9.3	9.7	8.2	6.1	4.1	2.0	0.0
LL + I :	M+	0.0	347.3	167.4	826.6	1503.6	1953.0	2214.4	2269.6
	V	160.9	152.7	157.0	139.9	53.6	32.0	68.9	47.3
LL + I :	M-	0.0	0.0	0.0	0.0	0.0	0.0	0.0	0.0
	V	0.0	0.0	0.0	0.0	0.0	0.0	0.0	0.0
LL + I :	Vmx	160.9	152.7	157.0	139.9	119.3	99.5	80.3	61.9
	M	0.0	354.4	171.9	826.6	1436.8	1821.2	1973.8	1907.2
Total :	M+	0.0	578.8	278.7	1381.8	2530.5	3316.9	3780.4	3902.9
	V	258.0	242.6	250.7	218.7	112.8	71.5	88.6	47.3
Total :	M-	0.0	0.0	0.0	0.0	0.0	0.0	0.0	0.0
	V	0.0	0.0	0.0	0.0	0.0	0.0	0.0	0.0
Total :	Vmx	258.0	242.6	250.7	218.7	178.4	138.9	100.1	61.9
	M	0.0	585.8	283.2	1381.8	2463.7	3185.0	3539.8	3540.6

		0.60L	0.70L	0.80L	0.90L	H/2	Trans	Bearing
Location,	ft	40.49	47.32	54.16	60.99	66.13	64.83	67.30
Self wt. :	M	961.9	837.7	630.8	341.0	68.4	142.2	0.0
(Max)	V	12.1	24.2	36.3	48.5	57.6	55.2	59.6
Self wt. :	M	692.6	603.2	454.1	245.5	49.2	102.4	0.0
(Min)	V	8.7	17.4	26.2	34.9	41.4	39.8	42.9
DL-Prec. :	M	212.4	185.0	139.3	75.3	15.1	31.4	-0.0
DC(Max)	V	2.7	5.3	8.0	10.7	12.7	12.2	13.2
DL-Prec. :	M	152.9	133.2	100.3	54.2	10.9	22.6	-0.0
DC(Min)	V	1.9	3.9	5.8	7.7	9.2	8.8	9.5
DL-Prec. :	M	0.0	0.0	0.0	0.0	0.0	0.0	0.0
DW(Max)	V	0.0	0.0	0.0	0.0	0.0	0.0	0.0
DL-Prec. :	M	0.0	0.0	0.0	0.0	0.0	0.0	0.0
DW(Min)	V	0.0	0.0	0.0	0.0	0.0	0.0	0.0
Deck + :	M	0.0	0.0	0.0	0.0	0.0	0.0	0.0
Haunch (Max)	V	0.0	0.0	0.0	0.0	0.0	0.0	0.0
Deck + :	M	0.0	0.0	0.0	0.0	0.0	0.0	0.0
Haunch (Min)	V	0.0	0.0	0.0	0.0	0.0	0.0	0.0
Diaphragm :	M	0.0	0.0	0.0	0.0	0.0	0.0	0.0
(Max)	V	0.0	0.0	0.0	0.0	0.0	0.0	0.0
Diaphragm :	M	0.0	0.0	0.0	0.0	0.0	0.0	0.0
(Min)	V	0.0	0.0	0.0	0.0	0.0	0.0	0.0
DL-Comp :	M	17.0	14.8	11.1	6.0	1.2	2.5	-0.0
DC(Max)	V	0.2	0.4	0.6	0.9	1.0	1.0	1.1
DL-Comp :	M	12.2	10.6	8.0	4.3	0.9	1.8	-0.0
DC(Min)	V	0.2	0.3	0.5	0.6	0.7	0.7	0.8
DL-Comp :	M	374.7	326.4	245.7	132.8	26.6	55.4	-0.0
DW(Max)	V	4.7	9.4	14.2	18.9	22.4	21.5	23.2
DL-Comp :	M	162.4	141.4	106.5	57.6	11.5	24.0	-0.0
DW(Min)	V	2.0	4.1	6.1	8.2	9.7	9.3	10.1
LL + I :	M+	2214.4	1953.0	1503.6	826.6	167.4	347.3	0.0
	V	68.9	32.0	53.6	139.9	157.0	152.7	160.9
LL + I :	M-	0.0	0.0	0.0	0.0	-0.0	-0.0	-0.0
	V	0.0	0.0	0.0	0.0	0.0	0.0	0.0
LL + I :	Vmx	80.3	99.5	119.3	139.9	157.0	152.7	160.9
	M	1973.8	1821.2	1436.8	826.6	171.9	354.4	0.0
Total :	M+	3780.4	3316.9	2530.5	1381.8	278.7	578.8	0.0
	V	88.6	71.5	112.8	218.7	250.7	242.6	258.0
Total :	M-	0.0	0.0	0.0	0.0	0.0	0.0	0.0
	V	0.0	0.0	0.0	0.0	0.0	0.0	0.0
Total :	Vmx	100.1	138.9	178.4	218.7	250.7	242.6	258.0
	M	3539.8	3185.0	2463.7	1381.8	283.2	585.8	0.0

REACTIONS (kips), STRENGTH I

Load Type	Left Support	Right Support
Self Wt.	59.6	59.6
Deck+Haunch	0.0	0.0
Diaphragm	0.0	0.0
DL-Prec.(DC)	13.2	13.2
DL-Prec.(DW)	0.0	0.0
DL-Comp.(DC)	4.2	4.2
DL-Comp.(DW)	92.9	92.9
Live	146.2	146.2
Pedestrian	0.0	0.0

Upward reactions are positive.
Live Load reactions are per lane with no distribution factor and no impact.
Reactions are not multiplied by Load Modifiers (ductility, redundancy and operational importance).
Non-composite load types are per beam.
Composite and Pedestrian load types are per total bridge width.

SHEAR AND MOMENT ENVELOPE : Span : 1, Beam : 1, FATIGUE I
Shears: kips, Moments: kft

		Bearing	Trans	H/2	0.10L	0.20L	0.30L	0.40L	Midspan
Location,	ft	0.00	2.48	1.17	6.31	13.15	19.98	26.82	33.65
Self wt. :	M	0.0	113.7	54.7	272.8	504.6	670.2	769.5	802.7
(Max)	V	47.7	44.2	46.1	38.8	29.1	19.4	9.7	0.0
Self wt. :	M	0.0	0.0	0.0	0.0	0.0	0.0	0.0	0.0
(Min)	V	0.0	0.0	0.0	0.0	0.0	0.0	0.0	0.0
DL-Prec. :	M	-0.0	25.1	12.1	60.2	111.4	148.0	169.9	177.2
DC(Max)	V	10.5	9.8	10.2	8.6	6.4	4.3	2.1	0.0
DL-Prec. :	M	-0.0	0.0	0.0	0.0	0.0	0.0	0.0	0.0
DC(Min)	V	0.0	0.0	0.0	0.0	0.0	0.0	0.0	0.0
DL-Prec. :	M	0.0	0.0	0.0	0.0	0.0	0.0	0.0	0.0
DW(Max)	V	0.0	0.0	0.0	0.0	0.0	0.0	0.0	0.0
DL-Prec. :	M	0.0	0.0	0.0	0.0	0.0	0.0	0.0	0.0
DW(Min)	V	0.0	0.0	0.0	0.0	0.0	0.0	0.0	0.0
Deck + :	M	0.0	0.0	0.0	0.0	0.0	0.0	0.0	0.0
Haunch (Max)	V	0.0	0.0	0.0	0.0	0.0	0.0	0.0	0.0
Deck + :	M	0.0	0.0	0.0	0.0	0.0	0.0	0.0	0.0
Haunch (Min)	V	0.0	0.0	0.0	0.0	0.0	0.0	0.0	0.0
Diaphragm :	M	0.0	0.0	0.0	0.0	0.0	0.0	0.0	0.0
(Max)	V	0.0	0.0	0.0	0.0	0.0	0.0	0.0	0.0
Diaphragm :	M	0.0	0.0	0.0	0.0	0.0	0.0	0.0	0.0
(Min)	V	0.0	0.0	0.0	0.0	0.0	0.0	0.0	0.0
DL-Comp :	M	0.0	2.0	1.0	4.8	8.9	11.8	13.6	14.2
DC(Max)	V	0.8	0.8	0.8	0.7	0.5	0.3	0.2	0.0
DL-Comp :	M	0.0	0.0	0.0	0.0	0.0	0.0	0.0	0.0
DC(Min)	V	0.0	0.0	0.0	0.0	0.0	0.0	0.0	0.0
DL-Comp :	M	0.0	36.9	17.8	88.6	163.8	217.6	249.8	260.6
DW(Max)	V	15.5	14.3	15.0	12.6	9.4	6.3	3.1	0.0
DL-Comp :	M	0.0	0.0	0.0	0.0	0.0	0.0	0.0	0.0
DW(Min)	V	0.0	0.0	0.0	0.0	0.0	0.0	0.0	0.0
LL + I :	M+	0.0	170.6	82.7	399.4	699.9	901.1	991.2	943.7
	V	80.1	75.8	78.0	69.1	58.1	45.4	34.5	25.3
LL + I :	M-	0.0	0.0	0.0	0.0	0.0	0.0	0.0	0.0
	V	0.0	0.0	0.0	0.0	0.0	0.0	0.0	0.0
LL + I :	Vmx	80.1	75.8	78.0	69.1	58.1	47.1	36.8	28.0
	M	0.0	170.6	82.7	399.4	699.9	862.8	904.3	862.1
Total :	M+	0.0	348.4	168.2	825.8	1488.6	1948.7	2194.0	2198.3
	V	154.6	144.8	150.0	129.7	103.5	75.7	49.6	25.3
Total :	M-	0.0	0.0	0.0	0.0	0.0	0.0	0.0	0.0
	V	0.0	0.0	0.0	0.0	0.0	0.0	0.0	0.0
Total :	Vmx	154.6	144.8	150.0	129.7	103.5	77.4	52.0	28.0
	M	0.0	348.4	168.2	825.8	1488.6	1910.3	2107.1	2116.7

		0.60L	0.70L	0.80L	0.90L	H/2	Trans	Bearing
Location,	ft	40.49	47.32	54.16	60.99	66.13	64.83	67.30
Self wt. :	M	769.5	670.2	504.6	272.8	54.7	113.7	0.0
(Max)	V	9.7	19.4	29.1	38.8	46.1	44.2	47.7
Self wt. :	M	0.0	0.0	0.0	0.0	0.0	0.0	0.0
(Min)	V	0.0	0.0	0.0	0.0	0.0	0.0	0.0
DL-Prec. :	M	169.9	148.0	111.4	60.2	12.1	25.1	-0.0
DC(Max)	V	2.1	4.3	6.4	8.6	10.2	9.8	10.5
DL-Prec. :	M	0.0	0.0	0.0	0.0	0.0	0.0	-0.0
DC(Min)	V	0.0	0.0	0.0	0.0	0.0	0.0	0.0
DL-Prec. :	M	0.0	0.0	0.0	0.0	0.0	0.0	0.0
DW(Max)	V	0.0	0.0	0.0	0.0	0.0	0.0	0.0
DL-Prec. :	M	0.0	0.0	0.0	0.0	0.0	0.0	0.0
DW(Min)	V	0.0	0.0	0.0	0.0	0.0	0.0	0.0
Deck + :	M	0.0	0.0	0.0	0.0	0.0	0.0	0.0
Haunch (Max)	V	0.0	0.0	0.0	0.0	0.0	0.0	0.0
Deck + :	M	0.0	0.0	0.0	0.0	0.0	0.0	0.0
Haunch (Min)	V	0.0	0.0	0.0	0.0	0.0	0.0	0.0
Diaphragm :	M	0.0	0.0	0.0	0.0	0.0	0.0	0.0
(Max)	V	0.0	0.0	0.0	0.0	0.0	0.0	0.0
Diaphragm :	M	0.0	0.0	0.0	0.0	0.0	0.0	0.0
(Min)	V	0.0	0.0	0.0	0.0	0.0	0.0	0.0
DL-Comp :	M	13.6	11.8	8.9	4.8	1.0	2.0	-0.0
DC(Max)	V	0.2	0.3	0.5	0.7	0.8	0.8	0.8
DL-Comp :	M	0.0	0.0	0.0	0.0	0.0	0.0	-0.0
DC(Min)	V	0.0	0.0	0.0	0.0	0.0	0.0	0.0
DL-Comp :	M	249.8	217.6	163.8	88.6	17.8	36.9	-0.0
DW(Max)	V	3.1	6.3	9.4	12.6	15.0	14.3	15.5
DL-Comp :	M	0.0	0.0	0.0	0.0	0.0	0.0	-0.0
DW(Min)	V	0.0	0.0	0.0	0.0	0.0	0.0	0.0
LL + I :	M+	991.2	901.1	699.9	399.4	82.7	170.6	0.0
	V	34.5	45.4	58.1	69.1	78.0	75.8	80.1
LL + I :	M-	0.0	0.0	0.0	0.0	0.0	0.0	0.0
	V	0.0	0.0	0.0	0.0	0.0	0.0	0.0
LL + I :	Vmx	36.8	47.1	58.1	69.1	78.0	75.8	80.1
	M	904.3	862.8	699.9	399.4	82.7	170.6	0.0
Total :	M+	2194.0	1948.7	1488.6	825.8	168.2	348.4	0.0
	V	49.6	75.7	103.5	129.7	150.0	144.8	154.6
Total :	M-	0.0	0.0	0.0	0.0	0.0	0.0	0.0
	V	0.0	0.0	0.0	0.0	0.0	0.0	0.0
Total :	Vmx	52.0	77.4	103.5	129.7	150.0	144.8	154.6
	M	2107.1	1910.3	1488.6	825.8	168.2	348.4	0.0

POSITIVE ENVELOPE STRESSES

Span : 1, Beam : 1, SERVICE I

RELEASE STRESSES, (ksi) (LOSS = 7.36 %)

	Trans	0.10L /0.90L	0.20L /0.80L	0.30L /0.70L	0.40L /0.60L	Midspan
Location, ft	3.00	6.83	13.67	20.51	27.34	34.17
Beam-Self						
Precast-top	0.189	0.405	0.720	0.945	1.080	1.125
Bottom	-0.347	-0.745	-1.324	-1.738	-1.986	-2.069
Prestress						
Precast-top	-0.611	-0.720	-1.007	-1.007	-1.007	-1.007
Bottom	3.531	4.288	5.591	5.591	5.591	5.591
Total						
Precast-top	-0.422	-0.315	-0.288	-0.063	0.072	0.117
Bottom	3.183	3.543	4.266	3.852	3.604	3.521

SERVICE I

POSITIVE ENVELOPE STRESSES, (ksi) (LOSS = 10.91 %)

	Bearing	Trans	H/2	0.10L /0.90L	0.20L /0.80L	0.30L /0.70L	0.40L /0.60L	Midspan
Location, ft	0.00	2.48	1.17	6.31	13.15	19.98	26.82	33.65
Prestress								
Precast-top	-0.081	-0.588	-0.320	-0.692	-0.969	-0.969	-0.969	-0.969
Bottom	0.442	3.396	1.834	4.123	5.377	5.377	5.377	5.377
Self wt.								
Precast-top	0.000	0.155	0.074	0.371	0.686	0.910	1.045	1.090
Bottom	-0.000	-0.284	-0.137	-0.682	-1.261	-1.675	-1.923	-2.006
DL-Prec (DC)								
Precast-top	-0.000	0.034	0.016	0.082	0.151	0.201	0.231	0.241
Bottom	0.000	-0.063	-0.030	-0.151	-0.278	-0.370	-0.425	-0.443
DL-Prec (DW)								
Precast-top	-0.000	-0.000	-0.000	-0.000	-0.000	-0.000	-0.000	-0.000
Bottom	-0.000	-0.000	-0.000	-0.000	-0.000	-0.000	-0.000	-0.000
Diaphragm								
Precast-top	-0.000	-0.000	-0.000	-0.000	-0.000	-0.000	-0.000	-0.000
Bottom	-0.000	-0.000	-0.000	-0.000	-0.000	-0.000	-0.000	-0.000
Deck + Haunch								
Precast-top	-0.000	-0.000	-0.000	-0.000	-0.000	-0.000	-0.000	-0.000
Bottom	-0.000	-0.000	-0.000	-0.000	-0.000	-0.000	-0.000	-0.000
DL-Comp (DC)								
Precast-top	-0.000	0.003	0.001	0.007	0.012	0.016	0.018	0.019
Bottom	0.000	-0.005	-0.002	-0.012	-0.022	-0.030	-0.034	-0.035
DL-Comp (DW)								
Precast-top	-0.000	0.050	0.024	0.120	0.223	0.296	0.339	0.354
Bottom	0.000	-0.092	-0.044	-0.221	-0.409	-0.544	-0.624	-0.651
LL+I(+)								
Precast-top	-0.000	0.270	0.130	0.642	1.167	1.516	1.719	1.762
Bottom	-0.000	-0.496	-0.239	-1.181	-2.148	-2.789	-3.163	-3.241
Final 1 (P/S + DL + LL)								
Precast-top	-0.081	-0.077	-0.074	0.529	1.270	1.970	2.384	2.497
Bottom	0.442	2.455	1.381	1.877	1.258	-0.031	-0.792	-1.001
Final 2 (P/S + DL)								
Precast-top	-0.081	-0.346	-0.204	-0.113	0.103	0.454	0.665	0.736
Bottom	0.442	2.951	1.621	3.058	3.405	2.758	2.370	2.241

Span : 1, Beam : 1, SERVICE III

RELEASE STRESSES, (ksi) (LOSS = 7.36 %)

	Trans	0.10L /0.90L	0.20L /0.80L	0.30L /0.70L	0.40L /0.60L	Midspan
Location, ft	3.00	6.83	13.67	20.51	27.34	34.17
Beam-Self						
Precast-top	0.189	0.405	0.720	0.945	1.080	1.125
Bottom	-0.347	-0.745	-1.324	-1.738	-1.986	-2.069
Prestress						
Precast-top	-0.611	-0.720	-1.007	-1.007	-1.007	-1.007
Bottom	3.531	4.288	5.591	5.591	5.591	5.591
Total						
Precast-top	-0.422	-0.315	-0.288	-0.063	0.072	0.117
Bottom	3.183	3.543	4.266	3.852	3.604	3.521
As_top, in2	2.267	1.177	0.833	0.000	0.000	0.000
Ast_prvd, in2	6.820	6.820	6.820	6.820	6.820	6.820

SERVICE III

POSITIVE ENVELOPE STRESSES, (ksi) (LOSS = 10.91 %)

	Bearing	Trans	H/2	0.10L /0.90L	0.20L /0.80L	0.30L /0.70L	0.40L /0.60L	Midspan
Location, ft	0.00	2.48	1.17	6.31	13.15	19.98	26.82	33.65
Prestress								
Precast-top	-0.081	-0.588	-0.320	-0.692	-0.969	-0.969	-0.969	-0.969
Bottom	0.442	3.396	1.834	4.123	5.377	5.377	5.377	5.377
Self wt.								
Precast-top	0.000	0.155	0.074	0.371	0.686	0.910	1.045	1.090
Bottom	-0.000	-0.284	-0.137	-0.682	-1.261	-1.675	-1.923	-2.006
DL-Prec (DC)								
Precast-top	-0.000	0.034	0.016	0.082	0.151	0.201	0.231	0.241
Bottom	0.000	-0.063	-0.030	-0.151	-0.278	-0.370	-0.425	-0.443
DL-Prec (DW)								
Precast-top	-0.000	-0.000	-0.000	-0.000	-0.000	-0.000	-0.000	-0.000
Bottom	-0.000	-0.000	-0.000	-0.000	-0.000	-0.000	-0.000	-0.000
Diaphragm								
Precast-top	-0.000	-0.000	-0.000	-0.000	-0.000	-0.000	-0.000	-0.000
Bottom	-0.000	-0.000	-0.000	-0.000	-0.000	-0.000	-0.000	-0.000
Deck + Haunch								
Precast-top	-0.000	-0.000	-0.000	-0.000	-0.000	-0.000	-0.000	-0.000
Bottom	-0.000	-0.000	-0.000	-0.000	-0.000	-0.000	-0.000	-0.000
DL-Comp (DC)								
Precast-top	-0.000	0.003	0.001	0.007	0.012	0.016	0.018	0.019
Bottom	0.000	-0.005	-0.002	-0.012	-0.022	-0.030	-0.034	-0.035
DL-Comp (DW)								
Precast-top	-0.000	0.050	0.024	0.120	0.223	0.296	0.339	0.354
Bottom	0.000	-0.092	-0.044	-0.221	-0.409	-0.544	-0.624	-0.651
LL+I(+)								
Precast-top	-0.000	0.216	0.104	0.513	0.934	1.213	1.375	1.410
Bottom	-0.000	-0.397	-0.191	-0.945	-1.718	-2.232	-2.530	-2.593
Final 1 (P/S + DL + LL)								
Precast-top	-0.081	-0.130	-0.100	0.401	1.037	1.667	2.040	2.145
Bottom	0.442	2.554	1.429	2.113	1.687	0.527	-0.160	-0.352

Span : 1, Beam : 1, FATIGUE I
POSITIVE ENVELOPE STRESSES, (ksi)

		Bearing	Trans	H/2	0.10L /0.90L	0.20L /0.80L	0.30L /0.70L	0.40L /0.60L	Midspan
Location, ft		0.00	2.48	1.17	6.31	13.15	19.98	26.82	33.65
F_LL+I(+)									
Precast-top		-0.000	0.232	0.112	0.543	0.951	1.224	1.347	1.282
Bottom		-0.000	-0.427	-0.207	-0.998	-1.749	-2.252	-2.477	-2.359
Final 3 (50% P/S	+ 50%	DL + F_LL)							
Precast-top		-0.041	0.059	0.010	0.486	1.002	1.451	1.679	1.650
Bottom		0.221	1.049	0.604	0.530	-0.047	-0.873	-1.292	-1.238

VERTICAL/HORIZONTAL SHEAR

VERTICAL SHEAR (Art. 5.8) - Span : 1, Beam : 1, STRENGTH I
Using General Beta Theta Equation procedure - Art.5.8.3.4.2

Location(ft) Vu (kips) Mcor (kft)	bv (in) a (in)	de (in) dv (in)	Aps (in2) fpo (ksi)	Vp (kips) vu/fc	eps_x Vc-com (kips)	Theta Beta	Vs-reqd (kips) Max.spc. (in)	Av/s (in2/ft) min.Av/s (in2/ft)	Av-prvd (in2/ft) pVn/Vu	Al_reqd (in2) Aps* (in2)
Bearing :	0.52									
258.0	28.75	20.97	1.114	0.0	6.00e-3	50.0	234.3	2.675	3.200	0.00
0.0	0.18	20.88	33.1	0.048	52.4	0.87	16.70	0.575	1.160	0.557
Transfer :	3.00									
242.6	28.75	20.97	6.510	0.0	-0.15e-3	28.5	0.0	0.575	3.200	0.00
585.8	1.40	20.27	189.0	0.046	314.6	5.40	16.21	0.575	3.385	4.889
Critical :	2.23									
247.4	28.75	20.97	6.510	0.0	-0.17e-3	28.4	0.0	0.575	3.200	0.00
398.0	1.02	20.46	189.0	0.047	323.6	5.50	16.36	0.575	3.379	3.434
0.1L :	6.84									
218.7	28.75	20.87	8.246	0.0	-0.12e-3	28.6	0.0	0.575	1.067	0.00
1381.8	2.00	20.16	189.0	0.042	305.2	5.27	16.13	0.575	2.068	5.459
0.2L :	13.67									
178.4	28.75	21.32	9.548	0.0	-0.04e-3	28.9	0.0	0.575	1.067	0.00
2463.7	3.05	20.16	189.0	0.034	285.9	4.93	16.13	0.575	2.425	7.648
0.3L :	20.50									
138.9	28.75	21.32	9.548	0.0	0.85e-3	32.0	0.0	0.575	1.067	0.00
3185.0	3.12	20.16	189.0	0.027	170.1	2.94	16.13	0.575	2.219	9.349
0.4L :	27.34									
100.1	28.75	21.32	9.548	0.0	1.48e-3	34.2	0.0	0.575	1.067	0.00
3539.8	3.04	20.16	189.0	0.019	131.8	2.28	16.13	0.575	2.610	9.548
0.5L :	34.17									
61.9	28.75	21.32	9.548	0.0	1.34e-3	33.7	0.0	0.575	1.067	0.00
3540.6	3.04	20.16	189.0	0.012	138.7	2.39	16.13	0.575	4.364	9.548
0.6L :	41.01									
100.1	28.75	21.32	9.548	0.0	1.48e-3	34.2	0.0	0.575	1.067	0.00
3539.8	3.04	20.16	189.0	0.019	131.8	2.28	16.13	0.575	2.610	9.548
0.7L :	47.85									
138.9	28.75	21.32	9.548	0.0	0.85e-3	32.0	0.0	0.575	1.067	0.00
3185.0	3.12	20.16	189.0	0.027	170.1	2.94	16.13	0.575	2.219	9.349
0.8L :	54.68									
178.4	28.75	21.32	9.548	0.0	-0.04e-3	28.9	0.0	0.575	1.067	0.00
2463.7	3.05	20.16	189.0	0.034	285.9	4.93	16.13	0.575	2.425	7.648

Location(ft) Vu (kips) Mcor (kft)	bv (in) a (in)	de (in) dv (in)	Aps (in2) fpo (ksi)	Vp (kips) vu/fc	eps_x Vc-com (kips)	Theta Beta	Vs-reqd (kips) Max.spc. (in)	Av/s (in2/ft) min.Av/s (in2/ft)	Av-prvd (in2/ft) pVn/Vu	Al_reqd (in2) Aps* (in2)
	61.51									
218.7	28.75	20.87	8.246	0.0	-0.12e-3	28.6	0.0	0.575	1.067	0.00
1381.8	2.00	20.16	189.0	0.042	305.2	5.27	16.13	0.575	2.068	5.459
Critical :	66.12									
247.4	28.75	20.97	6.510	0.0	-0.17e-3	28.4	0.0	0.575	3.200	0.00
398.0	1.02	20.46	189.0	0.047	323.6	5.50	16.36	0.575	3.379	3.434
Transfer :	65.35									
242.6	28.75	20.97	6.510	0.0	-0.15e-3	28.5	0.0	0.575	3.200	0.00
585.8	1.40	20.27	189.0	0.046	314.6	5.40	16.21	0.575	3.385	4.889
Bearing :	67.82									
258.0	28.75	20.97	1.114	0.0	6.00e-3	50.0	234.3	2.675	3.200	0.00
0.0	0.18	20.88	33.1	0.048	52.4	0.87	16.70	0.575	1.160	0.557

ANCHORAGE ZONE REINFORCEMENT (Art. 5.10.10)
Span : 1, Beam : 1

Fpi (kips)	fs (ksi)	h/4 (in)	Abrst_rqrd (in2)
1318.27	20.00	7.00	2.64

CAMBER/DEFLECTION

CAMBER AND DEFLECTIONS: SERVICE I
(Span : 1, Beam : 1; Units: in)

	Release	Mult	Erection	Mult	Final
At 0.1 x L =	6.31 ft				
Prestress	1.304	1.80	2.348	2.45	3.195
Self Wt.	-0.478	1.85	-0.884	2.70	-1.290
Deck + Haunch			0.000	2.30	0.000
DL-Prec. (DC)			-0.081	3.00	-0.242
Diaphragm			0.000	3.00	0.000
DL-Prec. (DW)			0.000	3.00	0.000
DL-Comp. (DC)			-0.006	3.00	-0.019
DL-Comp. (DW)			-0.119	3.00	-0.356
Live Load	Not Included				
Total	0.826		1.258		1.287

	Release	Mult	Erection	Mult	Final
At 0.2 x L =	13.15 ft				
Prestress	2.314	1.80	4.166	2.45	5.670
Self Wt.	-0.904	1.85	-1.673	2.70	-2.441
Deck + Haunch			0.000	2.30	0.000
DL-Prec. (DC)			-0.159	3.00	-0.478
Diaphragm			0.000	3.00	0.000
DL-Prec. (DW)			0.000	3.00	0.000
DL-Comp. (DC)			-0.013	3.00	-0.038
DL-Comp. (DW)			-0.234	3.00	-0.702
Live Load	Not Included				
Total	1.410		2.087		2.010

	Release	Mult	Erection	Mult	Final
At 0.3 x L =	19.98 ft				
Prestress	3.069	1.80	5.524	2.45	7.519
Self Wt.	-1.238	1.85	-2.290	2.70	-3.343
Deck + Haunch			0.000	2.30	0.000
DL-Prec. (DC)			-0.221	3.00	-0.663
Diaphragm			0.000	3.00	0.000
DL-Prec. (DW)			0.000	3.00	0.000
DL-Comp. (DC)			-0.018	3.00	-0.053
DL-Comp. (DW)			-0.325	3.00	-0.975
Live Load	Not Included				
Total	1.831		2.671		2.487

	Release	Mult	Erection	Mult	Final
At 0.4 x L =	26.82 ft				
Prestress	3.522	1.80	6.340	2.45	8.629
Self Wt.	-1.450	1.85	-2.682	2.70	-3.915
Deck + Haunch			0.000	2.30	0.000
DL-Prec. (DC)			-0.260	3.00	-0.781
Diaphragm			0.000	3.00	0.000
DL-Prec. (DW)			0.000	3.00	0.000
DL-Comp. (DC)			-0.021	3.00	-0.062
DL-Comp. (DW)			-0.383	3.00	-1.148
Live Load	Not Included				
Total	2.072		2.994		2.724

	Release	Mult	Erection	Mult	Final
At 0.5 x L =	33.65 ft				
Prestress	3.673	1.80	6.611	2.45	8.999
Self Wt.	-1.523	1.85	-2.817	2.70	-4.111
Deck + Haunch			0.000	2.30	0.000
DL-Prec. (DC)			-0.274	3.00	-0.821
Diaphragm			0.000	3.00	0.000
DL-Prec. (DW)			0.000	3.00	0.000
DL-Comp. (DC)			-0.022	3.00	-0.066
DL-Comp. (DW)			-0.402	3.00	-1.207
Live Load	Not Included				
Total	2.151		3.097		2.795

	Release	Mult	Erection	Mult	Final
At 0.6 x L =	40.49 ft				
Prestress	3.522	1.80	6.340	2.45	8.629
Self Wt.	-1.450	1.85	-2.682	2.70	-3.915
Deck + Haunch			0.000	2.30	0.000
DL-Prec. (DC)			-0.260	3.00	-0.781
Diaphragm			0.000	3.00	0.000
DL-Prec. (DW)			0.000	3.00	0.000
DL-Comp. (DC)			-0.021	3.00	-0.062
DL-Comp. (DW)			-0.383	3.00	-1.148
Live Load	Not Included				
Total	2.072		2.994		2.724

	Release	Mult	Erection	Mult	Final
At 0.7 x L =	47.32 ft				
Prestress	3.069	1.80	5.524	2.45	7.519
Self Wt.	-1.238	1.85	-2.290	2.70	-3.343
Deck + Haunch			0.000	2.30	0.000
DL-Prec. (DC)			-0.221	3.00	-0.663
Diaphragm			0.000	3.00	0.000
DL-Prec. (DW)			0.000	3.00	0.000
DL-Comp. (DC)			-0.018	3.00	-0.053
DL-Comp. (DW)			-0.325	3.00	-0.975
Live Load	Not Included				
Total	1.831		2.671		2.487

	Release	Mult	Erection	Mult	Final
At 0.8 x L =	54.16 ft				
Prestress	2.314	1.80	4.166	2.45	5.670
Self Wt.	-0.904	1.85	-1.673	2.70	-2.441
Deck + Haunch			0.000	2.30	0.000
DL-Prec. (DC)			-0.159	3.00	-0.478
Diaphragm			0.000	3.00	0.000
DL-Prec. (DW)			0.000	3.00	0.000
DL-Comp. (DC)			-0.013	3.00	-0.038
DL-Comp. (DW)			-0.234	3.00	-0.702
Live Load	Not Included				
Total	1.410		2.087		2.010

	Release	Mult	Erection	Mult	Final
At 0.9 x L =	60.99 ft				
Prestress	1.304	1.80	2.348	2.45	3.195
Self Wt.	-0.478	1.85	-0.884	2.70	-1.290
Deck + Haunch			0.000	2.30	0.000
DL-Prec. (DC)			-0.081	3.00	-0.242
Diaphragm			0.000	3.00	0.000
DL-Prec. (DW)			0.000	3.00	0.000
DL-Comp. (DC)			-0.006	3.00	-0.019
DL-Comp. (DW)			-0.119	3.00	-0.356
Live Load	Not Included				
Total	0.826		1.258		1.287

ULTIMATE MOMENT

ULTIMATE - Span : 1, Beam : 1, STRENGTH I
(Mr-prvd computed by Strain Compatibility method. Ult. Conc. Strain = 0.00300)

Location (ft) Mu k.ft	dp in	Aps in2	fps ksi	c in	a in	Mr-prvd k.ft	c/dt	Phi	Mcr k.ft	min Mr k.ft	Crkg Ratio	Mu-p/r Ratio
Transfer	2.48											
578.8	21.0	4.364	268.4	2.2	1.4	1984.8	0.085T	1.00	-	-	-	-
H/2	1.17											
278.7	21.1	2.349	269.2	1.2	0.8	1091.1	0.046T	1.00	-	-	-	-
0.1L	6.31											
1381.8	20.9	6.199	267.6	3.1	2.0	2759.4	0.120T	1.00	-	-	-	-
0.2L	13.15											
2530.5	21.3	8.997	266.1	4.7	3.1	4206.7	0.184T	1.00	2852.1	2852.1	1.47	-
0.3L	19.98											
3316.9	21.4	9.490	266.0	4.8	3.1	4311.5	0.188T	1.00	2852.1	2852.1	1.51	-
0.4L	26.82											
3780.4	21.3	9.548	266.1	4.7	3.0	4193.4	0.184T	1.00	2852.1	2852.1	1.47	-
0.5L	33.65											
3902.9	21.3	9.548	266.1	4.7	3.0	4193.4	0.184T	1.00	2852.1	2852.1	1.47	-
0.6L	40.49											
3780.4	21.3	9.548	266.1	4.7	3.0	4193.4	0.184T	1.00	2852.1	2852.1	1.47	-
0.7L	47.32											
3316.9	21.4	9.490	266.0	4.8	3.1	4311.5	0.188T	1.00	2852.1	2852.1	1.51	-
0.8L	54.16											
2530.5	21.3	8.997	266.1	4.7	3.1	4206.7	0.184T	1.00	2852.1	2852.1	1.47	-
0.9L	60.99											
1381.8	20.9	6.199	267.6	3.1	2.0	2759.4	0.120T	1.00	-	-	-	-
H/2	66.13											
278.7	21.1	2.349	269.2	1.2	0.8	1091.1	0.046T	1.00	-	-	-	-
Transfer	64.82											
578.8	21.0	4.364	268.4	2.2	1.4	1984.8	0.085T	1.00	-	-	-	-

Legend: C = Compression-Controlled (c/dt > 0.600)
I = In-Transition (0.60 >= c/dt > 0.375)
T = Tension-Controlled (c/dt <= 0.375)
Note : fr used for calculating Mcr is computed using AASHTO method (Art.5.4.2.6.)
Consider Bottom Tension Steel Contribution : NO

DETENSIONING

Span : 1, Beam : 1; Groups 1-22; Units: ksi

Grp	Str		Ys,in		3.00ft	3.50ft	7.00ft	9.00ft	11.00ft	13.00ft
1	2	E	2.50	Ft	0.105	0.135	0.330	0.431	0.524	
		M	2.50	Fb	-0.023	-0.078	-0.437	-0.623	**-0.79***	
2	2	E	10.50	Ft	0.094	0.124	0.319	0.420	0.513	0.599
		M	10.50	Fb	0.167	0.112	-0.247	-0.433	-0.605	**-0.76***
3	2	E	10.50	Ft	0.085	0.113	0.309	0.409	0.503	0.588
		M	10.50	Fb	0.324	0.301	-0.058	-0.244	-0.415	-0.573
4	2	E	10.50	Ft	0.076	0.103	0.298	0.399	0.492	0.578
		M	10.50	Fb	0.482	0.491	0.131	-0.054	-0.226	-0.383
5	2	E	10.50	Ft	0.066	0.092	0.287	0.388	0.482	0.567
		M	10.50	Fb	0.672	0.680	0.321	0.135	-0.037	-0.194
6	2	E	8.50	Ft	0.037	0.063	0.258	0.359	0.452	0.538
		M	8.50	Fb	0.895	0.903	0.544	0.358	0.187	0.029
7	2	E	8.50	Ft	0.037	0.063	0.229	0.330	0.423	0.509
		M	8.50	Fb	0.895	0.903	0.767	0.582	0.410	0.253
8	2	E	8.50	Ft	0.013	0.034	0.200	0.301	0.394	0.480
		M	8.50	Fb	1.081	1.126	0.991	0.805	0.633	0.476
9	2	E	8.50	Ft	0.013	0.034	0.171	0.272	0.365	0.451
		M	8.50	Fb	1.081	1.126	1.214	1.028	0.857	0.699
10	2	E	8.50	Ft	-0.016	0.005	0.142	0.243	0.336	0.422
		M	8.50	Fb	1.304	1.350	1.437	1.251	1.080	0.923
11	2	E	6.50	Ft	-0.064	-0.042	0.095	0.196	0.289	0.374
		M	6.50	Fb	1.561	1.607	1.694	1.509	1.337	1.180
12	2	E	6.50	Ft	-0.064	-0.042	0.079	0.148	0.241	0.327
		M	6.50	Fb	1.561	1.607	1.780	1.766	1.594	1.437
13	2	E	6.50	Ft	-0.103	-0.090	0.031	0.101	0.194	0.279
		M	6.50	Fb	1.776	1.864	2.037	2.023	1.851	1.694
14	2	E	6.50	Ft	-0.103	-0.090	0.016	0.053	0.146	0.232
		M	6.50	Fb	1.776	1.864	2.123	2.280	2.109	1.951
15	2	E	6.50	Ft	-0.151	-0.137	-0.032	0.006	0.099	0.185
		M	6.50	Fb	2.033	2.121	2.380	2.537	2.366	2.209
16	2	E	4.50	Ft	-0.217	-0.203	-0.098	-0.060	0.033	0.119
		M	4.50	Fb	2.324	2.412	2.671	2.829	2.657	2.500
17	2	E	4.50	Ft	-0.217	-0.203	-0.098	-0.082	-0.033	0.053
		M	4.50	Fb	2.324	2.412	2.671	2.926	2.948	2.791
18	2	E	4.50	Ft	-0.272	-0.269	-0.164	-0.148	-0.099	-0.013
		M	4.50	Fb	2.567	2.704	2.962	3.217	3.239	3.082
19	2	E	4.50	Ft	-0.272	-0.269	-0.164	-0.170	-0.165	-0.079
		M	4.50	Fb	2.567	2.704	2.962	3.314	3.530	3.373
20	2	E	4.50	Ft	-0.338	-0.335	-0.230	-0.236	-0.230	-0.145
		M	4.50	Fb	2.858	2.995	3.254	3.605	3.821	3.664
21	2	E	2.50	Ft	-0.338	-0.335	-0.230	-0.236	-0.259	-0.229
		M	2.50	Fb	2.858	2.995	3.254	3.605	3.930	3.989
22	2	E	2.50	Ft	-0.422	-0.419	-0.314	-0.320	-0.343	-0.314
		M	2.50	Fb	3.183	3.320	3.579	3.930	4.255	4.314

DESIGN SUMMARY

Span: 1, Beam: 1, Exterior beam

Beam type:	Double Tee,	Next 28D Castleton
Precast Length,	ft	68.35
Release Length,	ft	68.35
Strand Pattern:	Straight	
Strand:	6/10-270K-LL	
Strand Es,	ksi:	28500.0
No. of strands:	44	
	Draped:	0
	Straight:	44
Concrete Strength:		
	f'ci:	7.5 ksi
	f'c:	10.0 ksi
	f'ct:	10.0 ksi
Initial losses:	7.36 %	
Final losses:	10.91 %	

Specification	Allowable	Computed	Location	Status
Release Stresses (ksi) (Art. 5.9.4.1)				
Precast Bot (compression)	4.500	4.266	0.2L/0.8L	OK
Precast Top w/ no reinf. (tension)	-0.200	-0.422	Trans	
Precast Top w/ reinf. (tension)	-0.657			
Strength I (Art. 3.4.1, 5.7.3.1.1)	Provided	Required	Location	Status
Ult. Moment (k.ft)	4311.47	3902.95	Midspan	OK
Debonding Limits (Art. 5.11.4.3)	Allowable	Computed		Status
Max. Debond per Row	100.00 %	60.00 %		OK
Max. Debond Total	100.00 %	54.55 %		OK

Positive Moment Envelope Stresses (ksi) (Art. 3.4.1 and 5.9.4.2)

Specification	Allow	Final 1 Comp	Loc.	Allow	Final 2 Comp	Loc.	Allow	Final 3 Comp	Loc.
Service I Limit State - Compressive	Stresses	Only							
Precast Top	6.000	2.497	Midspan	4.500	0.736	Midspan			
Precast Bot	6.000	2.455	Transfer	4.500	3.405	0.2L/0.8L			
Service III Limit State - Tensile	Stresses	Only							
Precast Top	-0.601	-0.130	Transfer						
Precast Bot	-0.601	-0.352	Midspan						
Fatigue I Limit State - Compressive	Stresses	Only							
Precast Top							4.000	1.679	0.4L/0.6L
Precast Bot							4.000	1.049	Transfer

CAMBER / DEFLECTION: (PCI Design Handbook - 4th Ed.- Table 4.6.2)
0.5 x L = 33.65 ft

	Release	Mult	Erection	Mult	Final
Prestress	3.673	1.80	6.611	2.45	8.999
Self Wt.	-1.523	1.85	-2.817	2.70	-4.111
Deck + Haunch			0.000	2.30	0.000
DL-Prec. (DC)			-0.274	3.00	-0.821
Diaphragm			0.000	3.00	0.000
DL-Prec. (DW)			0.000	3.00	0.000
DL-Comp. (DC)			-0.022	3.00	-0.066
DL-Comp. (DW)			-0.402	3.00	-1.207
Live Load	Not Included				
Total	2.151		3.097		2.795

Positive values indicate upward deflection.

LOAD RATING SUMMARY

Load Rating of Prestressed Concrete Girder Bridges
(Manual for Bridge Evaluation, 2nd Edition, with 2011 Interim)

Span:1, Beam:1
Rating Summary

Design Live Load Inventory

Load Type	Weight (tons)	Controlling Location	RF	Type	Based on	RT (tons)
H20	20.00	0.5L : 33.7	2.03	Positive	PSStT	41
HL93 Design Load	-	0.5L : 33.7	1.10	Positive	CTens-B	-

Design Live Load Operating

Load Type	Weight (tons)	Controlling Location	RF	Type	Based on	RT (tons)
H20	20.00	0.5L : 33.7	2.85	Positive	Moment	57
HL93 Design Load	-	0.5L : 33.7	1.46	Positive	Moment	-

Legal Live Load

LRFR Article 6A.4.3.1 specifies that Legal Load Rating is not required when Inventory Design Load Rating Factor > 1.

Rating Factors	References	Values
Condition Factor	Table 6A.4.2.3-1	1.00
System Factor for Flexural Effect	Table 6A.4.2.4-1	1.00
System Factor for Shear Effect	Art. 6A.4.2.4	1.00
ADTT	Section C3.6.1.1.2	5000
Dynamic Load Factor for Design Level	Art. 6A.4.3.3	0.33
Dynamic Load Factor for Legal and Permit Level	Table C6A.4.4.3-1	0.33

For Flexural Effect: Condition Factor * System Factor = 1.00 >= 0.85 (Art. 6A.4.2.1) OK
For Shear Effect: Condition Factor * System Factor = 1.00 >= 0.85 (Art. 6A.4.2.1 and 6A.4.2.4) OK

Dead Load Factors (Table 6A.4.2.2-1)

Limit State	DC	DW
Strength I	1.25	1.50
Strength II	1.25	1.50
Service I	1.00	1.00
Service III	1.00	1.00

Design Live Load Factors (Table 6A.4.3.2.2-1)

Limit State	Inventory	Operating
Strength I	1.75	1.35
Service I	-	-
Service III	0.80	-

Legal Live Load Factors (Table 6A.4.4.2.3a-1)

Limit State	Values
Strength I	1.30
Service I	-
Service III	1.00

Allowable Stresses (ksi)

Rating Level	Concrete Compression	Concrete Tension	Steel
Design Inventory	0.60 x f'c = 6.00	0.19 x sqrt(f'c) = 0.60	0.90 x f'y = 218.70
Design Operating	0.60 x f'c = 6.00	0.19 x sqrt(f'c) = 0.60	0.90 x f'y = 218.70
Legal	0.60 x f'c = 6.00	0.19 x sqrt(f'c) = 0.60	-
Permit	0.60 x f'c = 6.00	0.19 x sqrt(f'c) = 0.60	0.90 x f'y = 218.70

Consider shear reinf. across plane (FDOT alternative): No

RATING RESULTS

A) Design Live Load Rating

Inventory Rating Level

Shear and Moment RF's are for Strength I Limit State
Tension Stress RF's are for Service III Limit State
Prestress tendon RF is for Service I Limit State

H20 Positive Live Load

Location	Moment	K	Mom-K	Shear	CTens-T	CTens-B	PSStT
Bearing : 0.0	N.A.	N.A.	N.A.	2.57	N.A.	N.A.	N.A.
Transfer : 2.5	10.27	1.00	10.27	9.86	-	18.21	4.59
Critical : 1.7	-	-	-	9.87	-	-	-
0.1L : 6.3	5.40	1.00	5.40	5.56	-	7.84	4.15
0.2L : 13.1	4.23	1.00	4.23	6.39	-	4.66	4.11
0.3L : 20.0	2.97	1.00	2.97	7.40	-	2.96	2.60
0.4L : 26.8	2.33	1.00	2.33	8.96	-	2.30	2.14
0.5L : 33.7	2.20	1.00	2.20	11.39	-	2.14	2.03
0.6L : 40.5	2.33	1.00	2.33	8.96	-	2.30	2.14
0.7L : 47.3	2.97	1.00	2.97	7.40	-	2.96	2.60
0.8L : 54.2	4.23	1.00	4.23	6.39	-	4.66	4.11
0.9L : 61.0	5.40	1.00	5.40	5.56	-	7.84	4.15
Critical : 65.6	-	-	-	9.87	-	-	-
Transfer : 64.8	10.27	1.00	10.27	9.86	-	18.21	4.59
Bearing : 67.3	N.A.	N.A.	N.A.	2.57	N.A.	N.A.	N.A.

HL93 Design Load Positive Live Load

Location	Moment	K	Mom-K	Shear	CTens-T	CTens-B	PSStT
Bearing : 0.0	N.A.	N.A.	N.A.	1.26	N.A.	N.A.	N.A.
Transfer : 2.5	5.05	1.00	5.05	4.79	-	8.95	3.94
Critical : 1.7	-	-	-	4.79	-	-	-
0.1L : 6.3	2.67	1.00	2.67	2.67	-	3.87	3.07
0.2L : 13.1	2.11	1.00	2.11	3.13	-	2.33	2.52
0.3L : 20.0	1.51	1.00	1.51	2.70	-	1.51	1.72
0.4L : 26.8	1.19	1.00	1.19	3.01	-	1.17	1.45
0.5L : 33.7	1.13	1.00	1.13	4.36	-	1.10	1.39
0.6L : 40.5	1.19	1.00	1.19	3.01	-	1.17	1.45
0.7L : 47.3	1.51	1.00	1.51	2.70	-	1.51	1.72
0.8L : 54.2	2.11	1.00	2.11	3.13	-	2.33	2.52
0.9L : 61.0	2.67	1.00	2.67	2.67	-	3.87	3.07
Critical : 65.6	-	-	-	4.79	-	-	-
Transfer : 64.8	5.05	1.00	5.05	4.79	-	8.95	3.94
Bearing : 67.3	N.A.	N.A.	N.A.	1.26	N.A.	N.A.	N.A.

Operating Rating Level

Shear and Moment RF's are for Strength I Limit State

H20 Positive Live Load

Location	Moment	K	Mom-K	Shear
Bearing : 0.0	N.A.	N.A.	N.A.	3.33
Transfer : 2.5	13.32	1.00	13.32	12.83
Critical : 1.7	-	-	-	12.84
0.1L : 6.3	7.00	1.00	7.00	7.30
0.2L : 13.1	5.48	1.00	5.48	8.44
0.3L : 20.0	3.85	1.00	3.85	9.79
0.4L : 26.8	3.02	1.00	3.02	11.86
0.5L : 33.7	2.85	1.00	2.85	15.07
0.6L : 40.5	3.02	1.00	3.02	11.86
0.7L : 47.3	3.85	1.00	3.85	9.79
0.8L : 54.2	5.48	1.00	5.48	8.44
0.9L : 61.0	7.00	1.00	7.00	7.30
Critical : 65.6	-	-	-	12.84
Transfer : 64.8	13.32	1.00	13.32	12.83
Bearing : 67.3	N.A.	N.A.	N.A.	3.33

HL93 Design Load Positive Live Load

Location	Moment	K	Mom-K	Shear
Bearing : 0.0	N.A.	N.A.	N.A.	1.63
Transfer : 2.5	6.54	1.00	6.54	6.26
Critical : 1.7	-	-	-	6.26
0.1L : 6.3	3.46	1.00	3.46	3.54
0.2L : 13.1	2.74	1.00	2.74	4.19
0.3L : 20.0	1.96	1.00	1.96	5.05
0.4L : 26.8	1.54	1.00	1.54	5.40
0.5L : 33.7	1.46	1.00	1.46	7.68
0.6L : 40.5	1.54	1.00	1.54	5.40
0.7L : 47.3	1.96	1.00	1.96	5.05
0.8L : 54.2	2.74	1.00	2.74	4.19
0.9L : 61.0	3.46	1.00	3.46	3.54
Critical : 65.6	-	-	-	6.26
Transfer : 64.8	6.54	1.00	6.54	6.26
Bearing : 67.3	N.A.	N.A.	N.A.	1.63

B) Legal Live Load Rating

Shear and Moment RF's are for Strength I Limit State
Tension Stress RF's are for Service III Limit State

3 Axle Straight Positive Live Load

Location	Moment	K	Mom-K	Shear	CTens-T	CTens-B
Bearing : 0.0	N.A.	N.A.	N.A.	2.40	N.A.	N.A.
Transfer : 2.5	9.63	1.00	9.63	9.22	-	10.14
Critical : 1.7	-	-	-	9.23	-	-
0.1L : 6.3	5.07	1.00	5.07	5.21	-	4.38
0.2L : 13.1	4.00	1.00	4.00	6.02	-	2.62
0.3L : 20.0	2.83	1.00	2.83	7.03	-	1.68
0.4L : 26.8	2.24	1.00	2.24	8.61	-	1.32
0.5L : 33.7	2.10	1.00	2.10	11.15	-	1.21
0.6L : 40.5	2.24	1.00	2.24	8.61	-	1.32
0.7L : 47.3	2.83	1.00	2.83	7.03	-	1.68
0.8L : 54.2	4.00	1.00	4.00	6.02	-	2.62
0.9L : 61.0	5.07	1.00	5.07	5.21	-	4.38
Critical : 65.6	-	-	-	9.23	-	-
Transfer : 64.8	9.63	1.00	9.63	9.22	-	10.14
Bearing : 67.3	N.A.	N.A.	N.A.	2.40	N.A.	N.A.

3S2 Positive Live Load

Location	Moment	K	Mom-K	Shear	CTens-T	CTens-B
Bearing : 0.0	N.A.	N.A.	N.A.	2.50	N.A.	N.A.
Transfer : 2.5	10.16	1.00	10.16	9.75	-	10.71
Critical : 1.7	-	-	-	9.72	-	-
0.1L : 6.3	5.44	1.00	5.44	5.63	-	4.70
0.2L : 13.1	4.46	1.00	4.46	6.82	-	2.92
0.3L : 20.0	3.18	1.00	3.18	8.48	-	1.89
0.4L : 26.8	2.52	1.00	2.52	11.36	-	1.48
0.5L : 33.7	2.49	1.00	2.49	16.25	-	1.44
0.6L : 40.5	2.52	1.00	2.52	11.36	-	1.48
0.7L : 47.3	3.18	1.00	3.18	8.48	-	1.89
0.8L : 54.2	4.46	1.00	4.46	6.82	-	2.92
0.9L : 61.0	5.44	1.00	5.44	5.63	-	4.70
Critical : 65.6	-	-	-	9.72	-	-
Transfer : 64.8	10.16	1.00	10.16	9.75	-	10.71
Bearing : 67.3	N.A.	N.A.	N.A.	2.50	N.A.	N.A.

4 Axle Straight Positive Live Load

Location	Moment	K	Mom-K	Shear	CTens-T	CTens-B
Bearing : 0.0	N.A.	N.A.	N.A.	2.15	N.A.	N.A.
Transfer : 2.5	8.65	1.00	8.65	8.27	-	9.11
Critical : 1.7	-	-	-	8.27	-	-
0.1L : 6.3	4.57	1.00	4.57	4.66	-	3.94
0.2L : 13.1	3.62	1.00	3.62	5.40	-	2.37
0.3L : 20.0	2.55	1.00	2.55	6.35	-	1.51
0.4L : 26.8	1.98	1.00	1.98	7.86	-	1.17
0.5L : 33.7	1.88	1.00	1.88	10.33	-	1.09
0.6L : 40.5	1.98	1.00	1.98	7.86	-	1.17
0.7L : 47.3	2.55	1.00	2.55	6.35	-	1.51
0.8L : 54.2	3.62	1.00	3.62	5.40	-	2.37
0.9L : 61.0	4.57	1.00	4.57	4.66	-	3.94
Critical : 65.6	-	-	-	8.27	-	-
Transfer : 64.8	8.65	1.00	8.65	8.27	-	9.11
Bearing : 67.3	N.A.	N.A.	N.A.	2.15	N.A.	N.A.

5 Axle Semi Positive Live Load

Location	Moment	K	Mom-K	Shear	CTens-T	CTens-B
Bearing : 0.0	N.A.	N.A.	N.A.	2.22	N.A.	N.A.
Transfer : 2.5	8.99	1.00	8.99	8.57	-	9.47
Critical : 1.7	-	-	-	8.56	-	-
0.1L : 6.3	4.79	1.00	4.79	4.90	-	4.13
0.2L : 13.1	3.86	1.00	3.86	5.83	-	2.53
0.3L : 20.0	2.76	1.00	2.76	7.08	-	1.63
0.4L : 26.8	2.16	1.00	2.16	9.21	-	1.27
0.5L : 33.7	2.08	1.00	2.08	12.98	-	1.20
0.6L : 40.5	2.16	1.00	2.16	9.21	-	1.27
0.7L : 47.3	2.76	1.00	2.76	7.08	-	1.63
0.8L : 54.2	3.86	1.00	3.86	5.83	-	2.53
0.9L : 61.0	4.79	1.00	4.79	4.90	-	4.13
Critical : 65.6	-	-	-	8.56	-	-
Transfer : 64.8	8.99	1.00	8.99	8.57	-	9.47
Bearing : 67.3	N.A.	N.A.	N.A.	2.22	N.A.	N.A.

6 Axle Trailer Positive Live Load

Location	Moment	K	Mom-K	Shear	CTens-T	CTens-B
Bearing : 0.0	N.A.	N.A.	N.A.	1.48	N.A.	N.A.
Transfer : 2.5	6.12	1.00	6.12	5.74	-	6.45
Critical : 1.7	-	-	-	5.72	-	-
0.1L : 6.3	3.29	1.00	3.29	3.29	-	2.84
0.2L : 13.1	2.72	1.00	2.72	4.04	-	1.79
0.3L : 20.0	1.99	1.00	1.99	5.04	-	1.18
0.4L : 26.8	1.67	1.00	1.67	5.78	-	**0.98***
0.5L : 33.7	1.64	1.00	1.64	7.40	-	**0.95***
0.6L : 40.5	1.67	1.00	1.67	5.78	-	**0.98***
0.7L : 47.3	1.99	1.00	1.99	5.04	-	1.18
0.8L : 54.2	2.72	1.00	2.72	4.04	-	1.79
0.9L : 61.0	3.29	1.00	3.29	3.29	-	2.84
Critical : 65.6	-	-	-	5.72	-	-
Transfer : 64.8	6.12	1.00	6.12	5.74	-	6.45
Bearing : 67.3	N.A.	N.A.	N.A.	1.48	N.A.	N.A.

Notation:
CComp-T/ CComp-B - Concrete Compression at Top/Bottom;
CTens-T/ CTens-B - Concrete Tension at Top/Bottom;
PSStT - Prestress Steel Tension.

CONSOLIDATED RATING REPORT

Load Rating of Prestressed Concrete Girder Bridges
(Manual for Bridge Evaluation, 2nd Edition, with 2011 Interim)

All Bridge

Design Live Load Inventory

Load Type	Weight (tons)	Controlling Location	Controlling Span	Controlling Beam	RF	Type	Based on	RT (tons)
H20	20.00	0.5L : 33.7	1	1	2.03	Positive	PSStT	41
HL93 Design Load	-	0.5L : 33.7	1	1	1.10	Positive	CTens-B	-

Span	Beam	Load Type	Weight (tons)	Controlling Location	RF	Type	Based on	RT (tons)
1	1	H20	20.00	0.5L : 33.7	2.03	Positive	PSStT	41
1	1	HL93 Design Load	-	0.5L : 33.7	1.10	Positive	CTens-B	-
1	2	H20	20.00	Bearing : 0.0	2.48	Positive	Shear	50
1	2	HL93 Design Load	-	Bearing : 0.0	1.21	Positive	Shear	-
1	3	H20	20.00	Bearing : 0.0	2.48	Positive	Shear	50
1	3	HL93 Design Load	-	Bearing : 0.0	1.21	Positive	Shear	-
1	4	H20	20.00	0.5L : 33.7	2.03	Positive	PSStT	41
1	4	HL93 Design Load	-	0.5L : 33.7	1.10	Positive	CTens-B	-

Design Live Load Operating

Load Type	Weight (tons)	Controlling Location	Controlling Span	Controlling Beam	RF	Type	Based on	RT (tons)
H20	20.00	0.5L : 33.7	1	1	2.85	Positive	Moment	57
HL93 Design Load	-	0.5L : 33.7	1	1	1.46	Positive	Moment	-

Span	Beam	Load Type	Weight (tons)	Controlling Location	RF	Type	Based on	RT (tons)
1	1	H20	20.00	0.5L : 33.7	2.85	Positive	Moment	57
1	1	HL93 Design Load	-	0.5L : 33.7	1.46	Positive	Moment	-
1	2	H20	20.00	Bearing : 0.0	3.21	Positive	Shear	64
1	2	HL93 Design Load	-	Bearing : 0.0	1.57	Positive	Shear	-
1	3	H20	20.00	Bearing : 0.0	3.21	Positive	Shear	64
1	3	HL93 Design Load	-	Bearing : 0.0	1.57	Positive	Shear	-
1	4	H20	20.00	0.5L : 33.7	2.85	Positive	Moment	57
1	4	HL93 Design Load	-	0.5L : 33.7	1.46	Positive	Moment	-

Legal Live Load

Load Type	Weight (tons)	Controlling Location	Controlling Span	Controlling Beam	RF	Type	Based on	RT (tons)
3 Axle Straight	30.00	0.5L : 33.7	1	1	1.21	Positive	CTens-B	36
3S2	36.00	0.5L : 33.7	1	1	1.44	Positive	CTens-B	52
4 Axle Straight	34.50	0.5L : 33.7	1	1	1.09	Positive	CTens-B	38
5 Axle Semi	38.00	0.5L : 33.7	1	1	1.20	Positive	CTens-B	46
6 Axle Trailer	68.00	0.5L : 33.7	1	1	**0.95***	Positive	CTens-B	64

Span	Beam	Load Type	Weight (tons)	Controlling Location	RF	Type	Based on	RT (tons)
1	1	3 Axle Straight	30.00	0.5L : 33.7	1.21	Positive	CTens-B	36
1	1	3S2	36.00	0.5L : 33.7	1.44	Positive	CTens-B	52
1	1	4 Axle Straight	34.50	0.5L : 33.7	1.09	Positive	CTens-B	38
1	1	5 Axle Semi	38.00	0.5L : 33.7	1.20	Positive	CTens-B	46
1	1	6 Axle Trailer	68.00	0.5L : 33.7	**0.95***	Positive	CTens-B	64
1	2	3 Axle Straight	30.00	0.5L : 33.7	1.58	Positive	CTens-B	47
1	2	3S2	36.00	0.5L : 33.7	1.88	Positive	CTens-B	68
1	2	4 Axle Straight	34.50	0.5L : 33.7	1.42	Positive	CTens-B	49
1	2	5 Axle Semi	38.00	0.5L : 33.7	1.57	Positive	CTens-B	60
1	2	6 Axle Trailer	68.00	0.5L : 33.7	1.24	Positive	CTens-B	84
1	3	3 Axle Straight	30.00	0.5L : 33.7	1.66	Positive	CTens-B	50
1	3	3S2	36.00	0.5L : 33.7	1.96	Positive	CTens-B	71
1	3	4 Axle Straight	34.50	0.5L : 33.7	1.49	Positive	CTens-B	51
1	3	5 Axle Semi	38.00	0.5L : 33.7	1.64	Positive	CTens-B	62
1	3	6 Axle Trailer	68.00	0.5L : 33.7	1.29	Positive	CTens-B	88
1	4	3 Axle Straight	30.00	0.5L : 33.7	1.21	Positive	CTens-B	36
1	4	3S2	36.00	0.5L : 33.7	1.44	Positive	CTens-B	52
1	4	4 Axle Straight	34.50	0.5L : 33.7	1.09	Positive	CTens-B	38
1	4	5 Axle Semi	38.00	0.5L : 33.7	1.20	Positive	CTens-B	46
1	4	6 Axle Trailer	68.00	0.5L : 33.7	**0.95***	Positive	CTens-B	64

Section 2.5

Interior Deck Design

Project: BR. 93 Project # 57632.00
Location: CASTLETON, VT Sheet of
Calculated by: EAF Date: 1/22/14
Checked by: KBR Date: 4/10/14
Title Deck Design (Interior)

CONCRETE STRENGTH:

Deck will be precast with beam stems

$\therefore f'_c = 10$ Ksi

- for design check 4 Ksi (VTrans SM Table 5.1.1.1-1)
- weight of concrete $w_c = 0.15$ Kcf

REBAR STRENGTH:

Rebar to be epoxy coated (pay Item 507.17); per VTrans use Grade 60 AASHTO M31 billetsteel bars

$E_s = 29{,}000$ Ksi

$F_y = 60$ Ksi

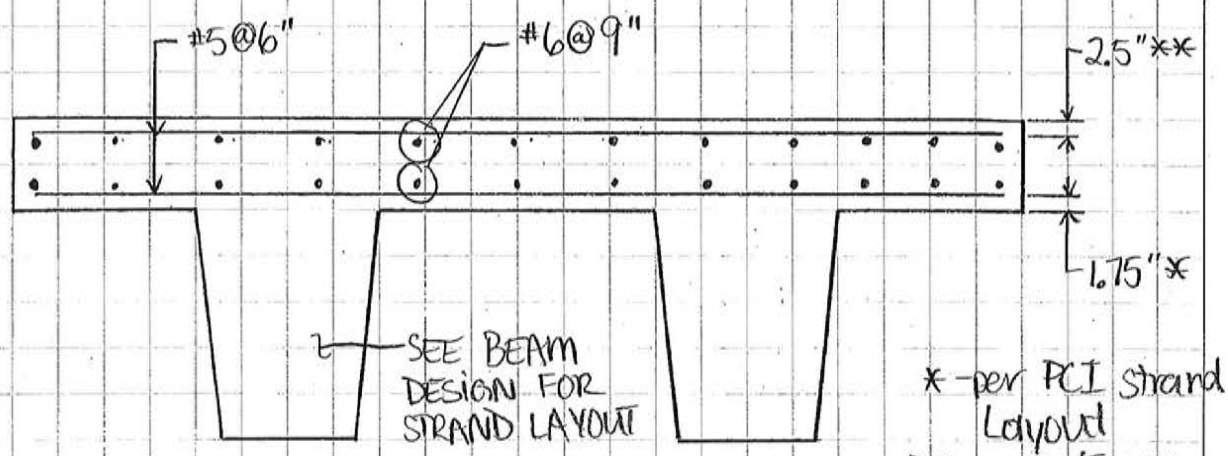

* - per PCI Strand Layout
** - per VTrans Structural Design Manual

INTERIOR BEAM LAYOUT
NTS

Transportation
Land Development
Environmental
Services

Computations

Vanasse Hangen Brustlin, Inc.

Project	Bridge #93	Project #	57632.00
Location	Castleton, VT	Sheet	
Calculated by	EAF	Date	4/22/14
Checked by	LBR	Date	4/23/14
Title	Interior Deck Design		

Interior Deck Slab Design

deck thickness =	8	in	
pavement thickness =	4	in	
il box beam & Snow Barrier weight =	0.1	klf	
girder spacing =	8.96	ft	
no. of bridge rails =	2		
bridge width out-to-out =	35.00	ft	
weight of concrete =	0.149	kcf	(per Vtrans Structural Manual Table 3.3.1-1)
weight of pavement =	0.150	kcf	(per Vtrans Structural Manual Table 3.3.1-1)

Compute Moments

$$M_{pos} = 0.08wl^2$$ positive moment with continuity factor

$$M_{neg} = 0.10wl^2$$ negative moment with continuity factor

DC

weight of deck =	0.099333	klf/ft	
weight of bridge rail =	0.006	klf/ft	(divide over entire bridge width)
total =	0.11	klf/ft	
$M_{DC(pos)}$ =	**0.67**	**k-ft/ft**	
$M_{DC(neg)}$ =	**0.84**	**k-ft/ft**	

DW

weight of pavement =	0.05	klf/ft
$M_{DC(pos)}$ =	**0.32**	**k-ft/ft**
$M_{DC(neg)}$ =	**0.40**	**k-ft/ft**

Transportation
Land Development
Environmental
Services

Computations

Vanasse Hangen Brustlin, Inc.

Project	Bridge #93	Project #	57632.00
Location	Castleton, VT	Sheet	
Calculated by	EAF	Date	4/22/14
Checked by	KBR	Date	4/23/14
Title	Interior Deck Design		

LL Use LRFD Table A4-1 and interpolate as necessary for bridge geometry

Girder Spacing (ft)	Positive Moment (k-ft/ft)	Negative Moment CL girder - Design Section		
		6 in	9 in	7.5 in
8.75	6.14	5.06	4.22	-
9	6.29	5.13	4.28	-
8.96	**6.265**	5.12	4.27	**4.69**

Postive Moment					
		Service I		Strength I	
	Unfactor Moment (k-ft/ft)	Load Factor	Factored Moment (k-ft/ft)	Load Factor	Factored Moment (k-ft/ft)
DC	0.67	1.00	0.67	1.25	0.84
DW	0.32	1.00	0.32	1.50	0.48
LL	6.264998	1.00	6.26	1.75	10.96

Service I Postive Moment = 7.26 k-ft/ft
Strength I Postive Moment = 12.29 k-ft/ft

Negative Moment					
		Service I		Strength I	
	Unfactor Moment (k-ft/ft)	Load Factor	Factored Moment (k-ft/ft)	Load Factor	Factored Moment (k-ft/ft)
DC	0.84	1.00	0.84	1.25	1.05
DW	0.40	1.00	0.40	1.50	0.60
LL	4.69	1.00	4.69	1.75	8.21

Service I Negative Moment = 5.94 k-ft/ft
Strength I Negative Moment = 9.87 k-ft/ft

Design rebar for greater moment therefore design deck rebar per positive moment.

Transportation
Land Development
Environmental
Services

Computations

Vanasse Hangen Brustlin, Inc.

Project	Bridge #93	Project #	57632.00
Location	Castleton, VT	Sheet	
Calculated by	EAF	Date	4/22/14
Checked by	KBR	Date	4/23/14
Title	Interior Deck Design		

Determine Required amount of steel for ***positive moment (controls design)***

Depth, d =	8	in	
Width, b =	12	in	
Top Cover =	2.5	in	(per Vtrans Structural Manual Table 5.1.2.6-1)
Bottom Cover =	1.75	in	
f_s =	60	ksi	
f'_c =	4	ksi	(Class A, per VTrans table 5.1.1.1-1, conservative approach)
ϕ_f =	0.9		LRFD 5.5.4.2.1
Bar size =	#5		
Bar diameter =	0.625	in	
Bar area =	0.310	in^2	
Spacing of bars =	6	in	
No. of bars per foot =	2		
Area of steel, A_s =	0.62	in^2	
d_s =	5.94	in	
a =	0.91		$a = \frac{A_s f_s}{0.85 f'_c b}$ (Modified 5.7.3.1.2-4 with "a" from 5.7.3.2.2)
M_n =	204	k-in	$M_r = \phi M_n = A_s f_s \left(d_s - \frac{a}{2} \right)$ LRFD 5.7.3.2.2-1
M_r =	184	k-in	

M_r =	15.3	k-ft	>	12.3	k-ft	OK

Check minimum reinforcement (LRFD 5.7.3.3.2)

Minimum reinforcement shall be at least equal to the lesser of M_{cr} or 1.33 M_u

$$M_{cr} = \gamma_3 [(\gamma_1 f_r) S_c]$$

$$S_c = \frac{bd^2}{6}$$

$$f_r = 0.24\sqrt{f'_c}$$

γ_1 =	1.6		For this check used higher f'c because it requires more steel. Check at f'c =10ksi
γ_3 =	0.67		
S_c =	128	in^3	
f_r =	0.76	ksi	LRFD 5.4.2.6
M_{cr} =	104	in-k	LRFD Eq. 5.7.3.3.2-1
M_{cr} =	9	ft-k	
$1.33M_u$ =	16	ft-k	
Minimum reinforcement requirement, M_u =	9	ft-k	
M_r =	15	OK	

$\frac{M_r}{M_u}$ = 1.8

Transportation
Land Development
Environmental
Services

Computations

Vanasse Hangen Brustlin, Inc.

Project	Bridge #93	Project #	57632.00
Location	Castleton, VT	Sheet	
Calculated by	EAF	Date	4/22/14
Checked by	KBR	Date	4/23/14
Title	Interior Deck Design		

Check control of cracking by distribution of reinforcement (LRFD 5.7.3.4)

$$s \le \frac{700\gamma_e}{\beta_s f_{ss}} - 2d_c \qquad (5.7.3.4\text{-}1)$$

γ_e = 1 Assume Class 1 exposure condition

Find the stress in the steel $f_{ss} = \frac{M}{A_s jd}$

$n = \frac{E_s}{E_c}$

E_s = 29000 ksi

E_c = 3834 ksi (5.4.2.4-1)

n = 7.6

M_{serv} = 7 k-ft

A_s = 0.6 in^2

d_s = 5.9 in

$\rho = \frac{A_s}{bd}$

ρ = 0.0087

$k = \sqrt{(\rho n)^2 + 2\rho n} - \rho n$

k = 0.303

$j = 1 - \frac{k}{3}$

j = 0.899

f_{ss} = 26.33 ksi

$\beta_s = 1 + \frac{d_c}{0.7(h - d_c)}$

d_c = 2.06 in

h = 8 in

β = 1.50

s ≤ 14 in OK

Transportation
Land Development
Environmental
Services

Computations

Vanasse Hangen Brustlin, Inc.

Project	Bridge #93	Project #	57632.00
Location	Castleton, VT	Sheet	
Calculated by	EAF	Date	4/22/14
Checked by	KBR	Date	4/23/14
Title	Interior Deck Design		

Distribution Steel (LRFD 9.7.3.2)

Reinforcement shall be placed in the secondary direction in the bottom of slabs as a percentage of the primary reinforcing for positive moment as follows:

For primary reinforcement perpendicular to traffic

$$220/\sqrt{S} \leq 67 \ \ percent$$

LRFD 9.7.3.2

S =	8.96	ft			
$220/\sqrt{S}$ =	73.5	%	>	67	%
Min distribution steel =	67	%			
Min distribution steel =	0.42	in^2/ft			
Bar size =	#5				
As =	0.31	in^2			
Spacing =	6	in			
No. of bars per span =	18				
As per foot =	0.623	in^2/ft	>	0.42	in^2/ft OK

VHB *Computations*

Project: BR #93 Project # 57632.00
Location: Castleton, VT Sheet of
Calculated by: EAF Date: 1/22/14
Checked by: Date:
Title Overhang deck Design (Exterior)

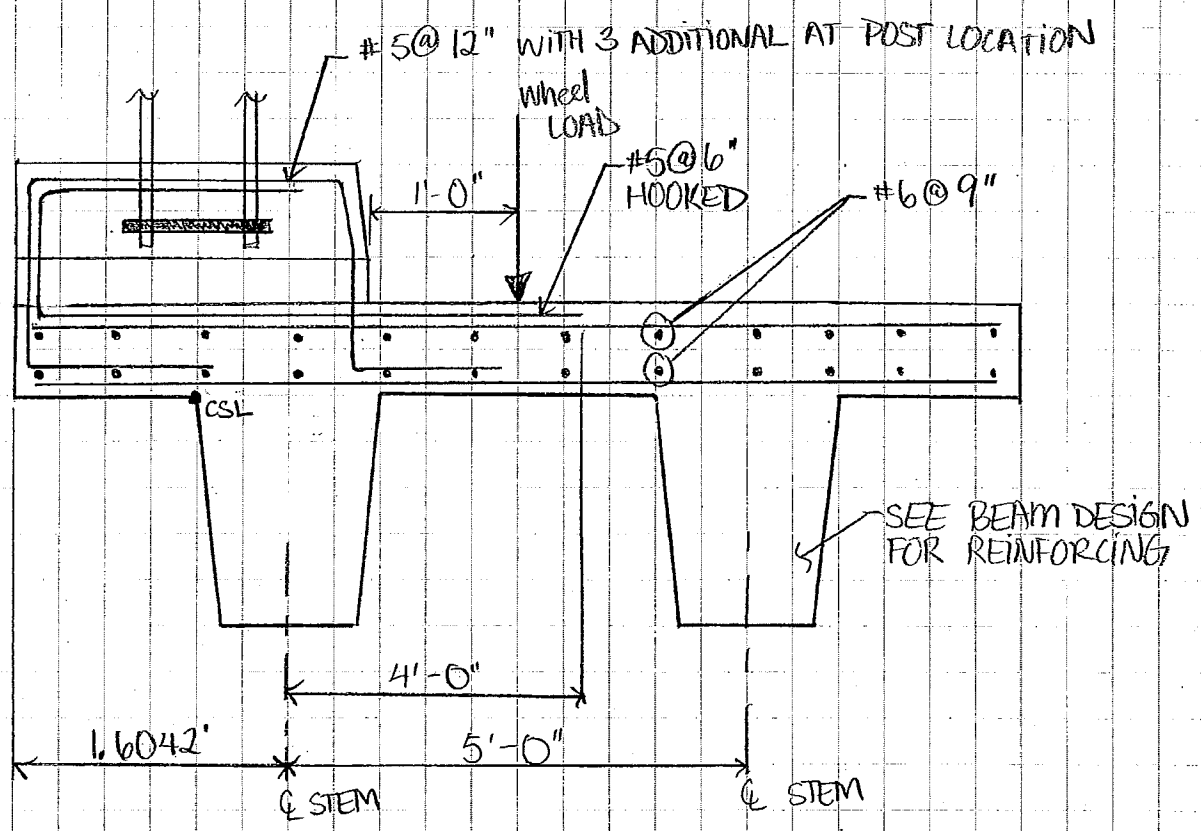

EXTERIOR BEAM REINFORCEMENT LAYOUT
NTS

*CURB AND ANCHOR BOLTS WILL BE POURED AT THE PLANT AFTER BEAM HAS BEEN POURED.

Section 2.6

Overhang Deck Design

Transportation
Land Development
Environmental
Services

Computations

Vanasse Hangen Brustlin, Inc.

Project	Bridge #93	Project #	57632.00
Location	Castleton, VT	Sheet	
Calculated by	EAF	Date	1/22/14
Checked by	KBR	Date	4/10/14
Title	Deck Overhang Design		

Deck Overhang Design - LRFD A13.4

Bridge deck overhangs shall be designed for the following design cases considered separately:

Design Case 1: The transverse and longitudinal forces specified in Article A13.2 Extreme Event Load Combination II limit state

Design Case 2: The vertical forces specifed in Article A13.2 - Extreme Event Load Combination II limit state

Design Case 3: The loads, specified in Article 3.6.1, that occupy the overhang - Load Combination Strength I limit state

For Design Case 1 & 2, the load factor for dead load shall be taken as 1.0
F'c is taken as 4 ksi for deck design, but actual srength will be 7 ksi. Using 4 ksi for to be conservative in design approach.

Compute DL & LL moments about the critical section location. For Design Case 3, place wheels 1'-0 from curb.

The deck section for a precast NEXT Beam (Type i) for negative moments and shear forces is taken at the face of the supporting precast element (per AASHTO LRFD 4.6.2.1.6).

Deck Overhang Properties

deck & haunch thickness =	8	in	
pavement thickness =	4	in	Assume 4" to be conservative
-rail box beam & Snow Bar weight =	0.1	klf	
girder spacing =	8.96	ft	
curb width =	2.00	ft	
curb height =	0.83	ft	
no. of bridge rails & curbs =	2		
bridge width out-to-out =	35	ft	
overhang width =	1.6	ft	(from CL beam stem)
weight of concrete =	0.15	kcf	
weight of pavement =	0.15	kcf	
CL girder to CSL =	7.50	in	(critical section location of single flange)

Curb & Rail

weight =	0.35	klf/ft
dist to CSL =	-0.02	ft
moment =	-0.01	k-ft/ft

Pavement

weight =	-0.02	klf/ft
dist to CSL =	-0.02	ft
moment =	0.000	k-ft/ft

Deck Overhang

weight =	0.16	klf/ft
dist to CSL =	0.49	ft
moment =	0.08	k-ft/ft

Live Load

Due to geometry, placing the wheel load 1' from the face of curb puts the wheel in the first bay, not in the overhang.

moment = 0.00 k-ft/ft

Transportation
Land Development
Environmental
Services

Computations

VHB Vanasse Hangen Brustlin, Inc.

Project	Bridge #93	Project #	57632.00
Location	Castleton, VT	Sheet	
Calculated by	EAF	Date	1/22/14
Checked by	KBR	Date	4/10/14
Title	Deck Overhang Design		

Deck Overhang Design - LRFD A13.4

Load Summary

	M (k-ft/ft)	Strength I Load Factors	Strength I Moment (k-ft/ft)	Extreme II Load Factors	Extreme II Moment (k-ft/ft)
DC	0.07	1.25	0.1	1.00	0.07
DW	0.000	1.50	0.0	1.00	0.00
LL	0.00	1.75	0.0	0.50	0.00
CT	see below	0.00	0.0	1.00	see below

Design Case 1

For Design Case 1, the moment per ft, M_d, and thrust per ft of deck, T, may be taken as:

$$M_d = \frac{M_{post}}{W_b + d_b}$$ LRFD Eq. A13.4.3.1-1

$$T = \frac{P_p}{W_b + d_b}$$ LRFD Eq. A13.4.3.1-2

For a post and beam rail system, the design moment and thrust are distributed over a width, Wb + db. This length takes the force down to the top of curb. In our case, since we have a curb, we should be distributing this force down to the top of deck by taking in the height of the curb.

Modify the above equations as shown below.

$$M_d = \frac{M_{post}}{W_b + d_b + 2h_c}$$ LRFD Eq. A13.4.3.1-1 (mod)

$$T = \frac{P_p}{W_b + d_b + 2h_c}$$ LRFD Eq. A13.4.3.1-2 (mod)

where h_c = 10.00 in height of the curb

Transportation
Land Development
Environmental
Services

Computations

Vanasse Hangen Brustlin, Inc.

Project	Bridge #93	Project #	57632.00
Location	Castleton, VT	Sheet	
Calculated by	EAF	Date	1/22/14
Checked by	KBR	Date	4/10/14
Title	Deck Overhang Design		

Deck Overhang Design - LRFD A13.4

Design Case 1 - Cont'd

M_{post} =	78.8	k-ft	plastic moment resistence of a single post
P_p =	34.6	kips	shear force on a single post which corresponds to M_{post} and is located Y_{bar} above the deck
W_b =	14	in	width of base plate
d_b =	8.19	in	distance from outer edge of base plate to innermost row of bolts as shown in Figure A13.4.3.1-1
d =	5.81	in	outside of curb to outside of base plate
M_d =	22.4	k-ft/ft	
T =	9.8	kip/ft	tensile force in deck

Railing geometry

Fy = 50 ksi

R1 = N/A	Z_{R1} =	0	in^3
R2 = 8 x 4 x 5/16	Z_{R2} =	16.1	in^3
R3 = 4 x 4 x 1/4	Z_{R3} =	4.69	in^3
P1 = W6 x 25	Z_{P1} =	18.9	in^3

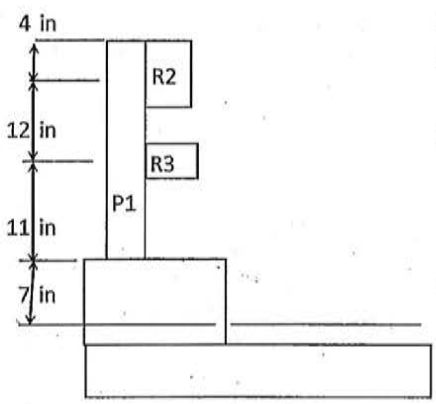

$$Y_{bar} = \frac{(Z_{R1} \times d_1) + (Z_{R2} \times d_2) + (Z_{R3} \times d_3)}{(Z_{R1} + Z_{R2} + Z_{R3})}$$

Y_{bar} = 27.29 in above pavement

$$M_{post} = F_y Z$$

M_d =	22.4	k-ft/ft
T =	9.8	kip/ft

Transportation
Land Development
Environmental
Services

Computations

Vanasse Hangen Brustlin, Inc.

Project	Bridge #93	Project #	57632.00
Location	Castleton, VT	Sheet	
Calculated by	EAF	Date	1/22/14
Checked by	KBR	Date	4/10/14
Title	Deck Overhang Design		

Deck Overhang Design - LRFD A13.4

Design Case 2

Crash Test Level	TL-4		
Design Vertical Force, F_v =	18.0	kips	LRFD TA. A13.2-1
L_v =	18.0	ft	

$$P_v = \frac{F_v L}{L_v}$$ LRFD Eq. A13.4.3.1-3

$$M_d = \frac{P_v X}{b}$$ LRFD Eq. A13.4.3.1-4

Similarly to Design Case 1, since we have a curb, we need to bring the forces down to the top of deck.

Modify the above equations as shown below.

$$P_v = \frac{F_v L}{L_v + 2h_c}$$ LRFD Eq. A13.4.3.1-3 (mod)

$$M_d = \frac{P_v X}{b}$$ include "+2h_c" in the calc of "b" below

X =	0.494825	ft	distance form the outside edge of base plate to design section
b =	3.82	ft	$b = 2X + W_b + 2h_c$
L =	8	ft	post spacing (assume max for design)

P_v =	7.3	klf
M_d =	0.9	k-ft/ft

M_d = 0.9 k-ft/ft

Design Case 3

Since a wheel load doesn't fall on the overhang, by observation, Design Case 3 will not control.

Design Summary

M_d =	22.4	k-ft/ft
T =	9.8	kip/ft

Transportation
Land Development
Environmental
Services

Computations

Vanasse Hangen Brustlin, Inc.

Project	Bridge #93	Project #	57632.00
Location	Castleton, VT	Sheet	
Calculated by	EAF	Date	1/22/14
Checked by	KBR	Date	4/10/14
Title	Deck Overhang Design		

Deck Overhang Design - LRFD A13.4

Determine Required amount of steel for deck overhang

Depth, d =	8	in	
Width, b =	12	in	
Top Cover =	2.5	in	
f_s =	60	ksi	
f'_c =	4	ksi	(Prestress Concrete Strength is 7 ksi use 4 ksi to be conservative)
ϕ_f =	0.9		

LRFD 5.5.4.2.1

Bar size =	#5		(provided from interior deck slab design)
Bar diameter =	0.625	in	
Bar area =	0.310	in^2	
Spacing of bars =	6	in	
No. of bars per foot =	2		
Area of steel, A_s =	0.62	in^2	(provided from interior deck slab design)

Bar size =	#5		(additional overhang steel)
Bar diameter =	0.625	in	
Bar area =	0.310	in^2	
Spacing of bars =	6	in	
No. of bars per foot =	2		
Area of steel, A_s =	0.62	in^2	(additional overhang steel)
			(since ldb <OH, no reduction in steel area required)
Total Area of steel, A_s =	1.24	in^2/ft	

d_s = 5.19 in

a = 1.82 $\quad a = \dfrac{A_s f_s}{0.85 f'_c b}$ (Modified 5.7.3.1.2-4 with "a" from 5.7.3.2.2)

M_n = 318 k-in $\quad M_r = \phi M_n = A_s f_s \left(d_s - \dfrac{a}{2}\right)$ LRFD 5.7.3.2.2-1

M_r = 286 k-in

M_r =	24	k-ft	>	22	k-ft	OK

Transportation
Land Development
Environmental
Services

Computations

Vanasse Hangen Brustlin, Inc.

Project	Bridge #93	Project #	57632.00
Location	Castleton, VT	Sheet	
Calculated by	EAF	Date	1/22/14
Checked by	KBR	Date	4/10/14
Title	Deck Overhang Design		

Deck Overhang Design - LRFD A13.4

Check minimum reinforcement (LRFD 5.7.3.3.2)

Minimum reinforcement shall be at least equal to the lesser of M_{cr} or 1.33 M_u

$$M_{cr} = \gamma_3[(\gamma_1 f_r)S_c]$$

γ_1 = 1.6

γ_3 = 0.67

For this check used higher f'c because it requires more steel. Check at f'c =10ksi

$$S_c = \frac{bd^2}{6}$$

S_c = 128 in^3

$$f_r = 0.24\sqrt{f'_c}$$

f_r = 0.76 ksi — LRFD 5.4.2.6

M_{cr} = 104 in-k — LRFD Eq. 5.7.3.3.2-1

M_{cr} = 9 ft-k

$1.33M_u$ = 30 ft-k

$$\frac{M_r}{M_u} = 2.7$$

Minimum reinforcement requirement, M_u = 9 ft-k

M_r = 24 OK

Transportation
Land Development
Environmental
Services

Computations

Vanasse Hangen Brustlin, Inc.

Project	Bridge #93	Project #	57632.00
Location	Castleton, VT	Sheet	
Calculated by	EAF	Date	1/22/14
Checked by	KBR	Date	4/10/14
Title	Deck Overhang Design		

Deck Overhang Design - LRFD A13.4

Check Tensile Resistance:

"Left Over" area of steel from flexural resistance:

$$A_{s\,Req'd} = \frac{M_u}{f_s(d_s - \frac{a}{2})}$$

M_u =	22.4	k-ft/ft
f_s =	60	
d_s =	5.19	
a =	1.82	
ϕ =	0.9	
$A_{s\ Req'd}$ =	1.05	in^2/ft
$A_{s\ Prov'd}$ =	1.24	in^2/ft
$A_{s\ available\ to\ resist\ tension}$ =	0.19	in^2/ft

$$A_{s\ Req'd(ten)} = \frac{T_u}{\phi f_s}$$

T_u =	9.8	klf				
$A_{s\ Req'd\ (ten)}$ =	0.18	in^2/ft	<	0.19	in^2/ft	OK

Check Punching Shear:

For Design Case 1, the factored shear may be taken as:

$$V_u = A_f F_y$$ LRFD Eq. A13.4.3.2-1

The factored reistance of deck overhangs to punching shear may be taken as:

$$V_r = \phi V_n$$ LRFD Eq. A13.4.3.2-2

$$V_n = v_c\left[W_b + h + 2\left(E + \frac{B}{2} + \frac{h}{2}\right)\right]h$$ LRFD Eq. A13.4.3.2-3

$$v_c = \left(0.0633 + \frac{0.1265}{\beta_c}\right)\sqrt{f'_c} \le 0.1265\sqrt{f'_c}$$ LRFD Eq. A13.4.3.2-4

$$\frac{B}{2} + \frac{h}{2} \le B$$ LRFD Eq. A13.4.3.2-5

in which:

$$\beta_c = \frac{W_b}{d_b}$$ LRFD Eq. A13.4.3.2-6

A_f =	2.77	in^2	area of post compression flange
F_y =	50	ksi	yield strength of the post compression flange

V_u = 138 kips

Check Punching Shear - Cont'd:

W_b = 14 in

d_b = 8.1875 in

β_c = 1.709924

h = 18.00 in — depth of slab & curb

B = 8 in — distance between centroids of tensile and compressive stress resultants in post

f'_c = 4 ksi

E = 7.625 in — distance from edge of slab to centroid of compressive stress resultant in post

ϕ = 1.0

v_c = 0.25 ksi — nominal shear resistance provided by tensile stresses in the concrete

V_n = 334 kips

V_r = 334 kips > 138 kips OK

Check Development Length Available:

The basic development length for deformed bars in tension terminating in a standard hook shall not be less than:

- The product of the basic development length and the application of modification factors
- 5.0 bar diameters
- 6 in

$$l_{hb} = \frac{38.0 d_b}{\sqrt{f'c}}$$

LRFD Eq. 5.11.2.4.1-1

d_b = 0.625 in

f'_c = 4 ksi

l_{hb} = 11.88 in

$8d_b$ = 5 in

Modifcation Factors

Epoxy = 1.2

l_h = 15 in

hook cover = 3.0 in

Available hook length past face of curb = 21 in > 15 in OK

Transportation
Land Development
Environmental
Services

Computations

Vanasse Hangen Brustlin, Inc.

Project	Bridge #93	Project #	57632.00
Location	Castleton, VT	Sheet	
Calculated by	EAF	Date	1/22/14
Checked by	KBR	Date	4/10/14
Title	Deck Overhang Design		

Deck Overhang Design - LRFD A13.4

Determine development length into the main portion of the deck

For No. 11 bars and smaller:

$$l_{db} = \frac{1.25 A_b f_y}{\sqrt{f'c}}$$ but not less than: $0.4 d_b f_y$

A_b = 0.310 in^2

f_y = 60 ksi

f'_c = 4 ksi

d_b = 0.625 in

l_{db1} = 12 in

l_{db} = 15 in

$0.4 d_b f_y$ = 15 in

Modification factor that increase l_{db}:

Epoxy Coating = 1.2

l_d = 18

Develop bars past the midspan of the first interior bay

girder spacing = 5.00 ft

length of bars past CL beam

stem= 4.00 ft

FOR REFERENCE ONLY 57632.00
- OVERHANG DECK DESIGN (5)

VHB Computations

Project:	I-93	Project #	57738.01
Location:	NB/111A	Sheet	7 of
Calculated by:	JTK	Date:	11-6-07
Checked by:	LSG	Date:	7/28/08
Title	DECK DESIGN - CANTILEVER		

CT. - VEHICULAR COLLISION FORCE

PER NHDOT BDM 642.4.2, EQUIVALENT TEST LEVEL FOR T2 RAIL IS TL-4.

STANDARD NHDOT T2 RAIL IS MOUNTED ON A CURB. THE LRFD SECTION ON DECK OVERHANG DESIGN PROVIDES GUIDEANCE ON TWO RAIL TYPES - CONCRETE PARAPET RAILINGS AND POST-AND-BEAM RAILINGS. SINCE THE DOT RAILING CONSISTS OF A COMBINATION OF BOTH POST-AND-BEAM AND A SHORT "PARAPET" CURB, THE LARGE CONCENTRATED FORCES AT THE BASE OF THE POST NEED TO BE TRANSFERRED TO THE TOP OF THE DECK BY MODIFYING EQUATIONS A13.4.2-1 AND A13.4.3.1-1&2.

FOR A POST-AND-BEAM RAIL SYSTEM, THE DESIGN MOMENT AND THRUST ARE DISTRIBUTED OVER A WIDTH, $W_b + D$ (Eqs. A13.4.3.1 & 2). THIS CRITICAL LENGTH OF DISTRIBUTION IS SHOWN BELOW:

FOR DESIGN CASE I →

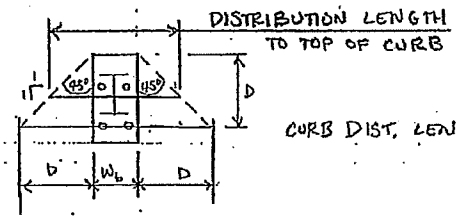

$$\text{CURB DIST. LENGTH} = \frac{W_b + (2D + W_b)}{2} = W_b + D$$

IN OUR CASE THE DISTRIBUTION LENGTH $W_b + D$ SHOULD ALSO ADD A 1:1 DISTRIBUTION THROUGH THE HEIGHT OF THE CURB TO TRANFER THE FORCES TO THE TOP OF THE DECK AS SHOWN BELOW:

FOR DESIGN CASE I →

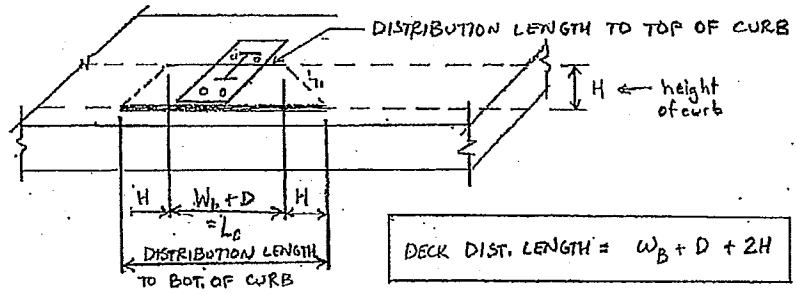

$$\boxed{\text{DECK DIST. LENGTH} = W_B + D + 2H}$$

Section 2.7

Hairpin Connection

VHB *Computations*

Project: Br #93 | Project # 57632.00
Location: CASTLETON, VT | Sheet of
Calculated by: EAF | Date: 1/22/14
Checked by: | Date:
Title HAIRPIN DESIGN

- Design Hairpins to resist max moment at centerline of joint.
- Per VTrans request design hairpin with #4 bars at maximum 6" spacing.

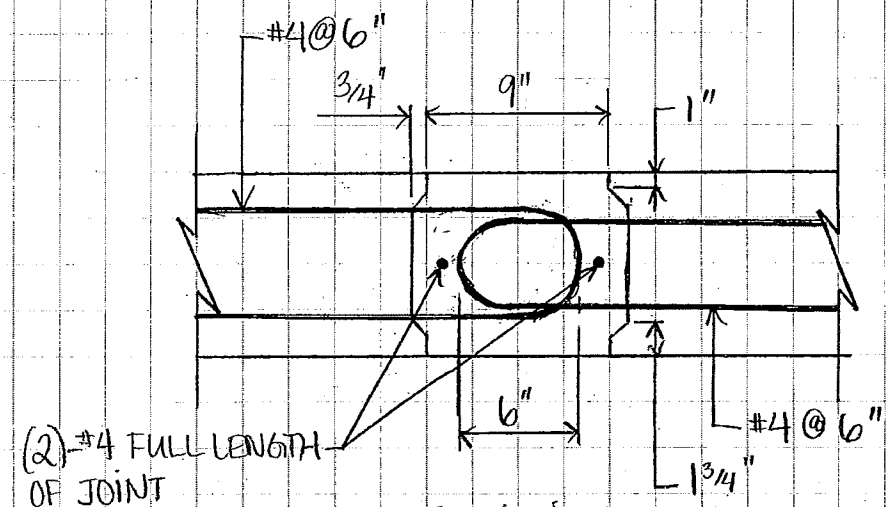

ELEVATION

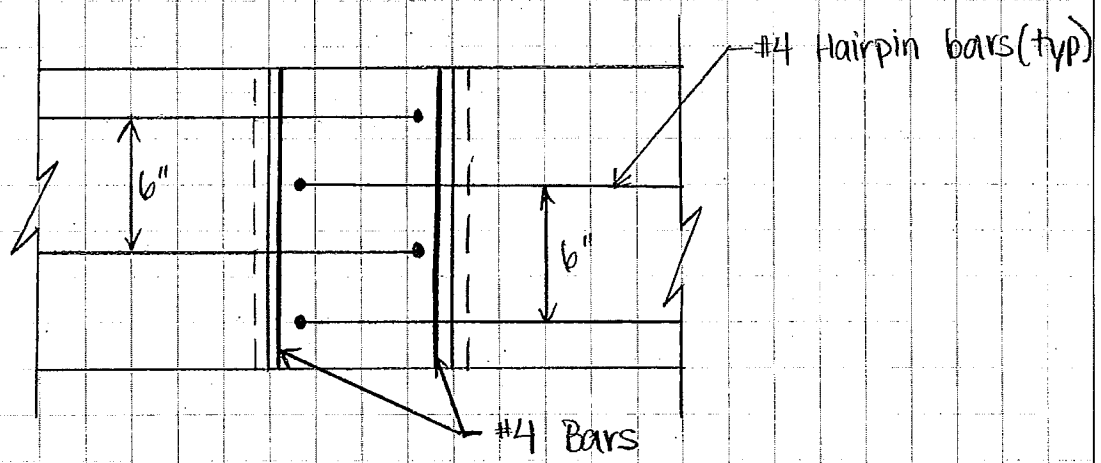

PLAN

Transportation
Land Development
Environmental
Services

Computations

Vanasse Hangen Brustlin, Inc.

Project	Bridge #93	Project #	57632.00
Location	Castleton, VT	Sheet	
Calculated by	EAF	Date	4/18/14
Checked by	KBR	Date	4/23/14
Title	Hairpin Joint Reinforcement Design Check		

Hairpin Joint Reinforcement Design Check

deck thickness =	8	in	
pavement thickness =	4	in	
2-Box Beam & Snow Barrier weight =	0.100	klf	
girder spacing =	8.958	ft	
Curb width =	2.00	ft	
Curb height =	0.83	ft	
no. of bridge rails & curbs =	2		
bridge width out-to-out =	35.00	ft	
weight of concrete =	0.150	kcf	(per Vtrans Structural Manual Table 3.3.1-1)
weight of pavement =	0.150	kcf	(per Vtrans Structural Manual Table 3.3.1-1)

Compute Moments

$M_{pos} = 0.08wl^2$ positive moment with continuity factor

$M_{neg} = 0.10wl^2$ negative moment with continuity factor

DC

weight of deck =	0.1	klf/ft	
weight of curb =	0.014	klf/ft	(divide over entire bridge width, will be precast with exterior beams)
weight of bridge rail =	0.006	klf/ft	(divide over entire bridge width)
total =	0.12	klf/ft	
$M_{DC(pos)}$ =	**0.77**	**k-ft/ft**	
$M_{DC(neg)}$ =	**0.96**	**k-ft/ft**	

DW

weight of pavement =	0.05	klf/ft
$M_{DC(pos)}$ =	**0.32**	**k-ft/ft**
$M_{DC(neg)}$ =	**0.40**	**k-ft/ft**

Transportation
Land Development
Environmental
Services

Computations

Vanasse Hangen Brustlin, Inc.

Project	Bridge #93	Project #	57632.00
Location	Castleton, VT	Sheet	
Calculated by	EAF	Date	4/18/14
Checked by	KBR	Date	4/23/14
Title	Hairpin Joint Reinforcement Design Check		

LL Use LRFD Table A4-1 and interpolate as necessary for bridge geometry

Girder Spacing (ft)	Positive Moment (k-ft/ft)	Negative Moment CL girder - Design Section		
		6 in	9 in	7.5 in
8.75	6.14	5.06	4.22	-
8.96	**6.26**	**5.12**	**4.26**	**4.69**
9	6.29	5.13	4.27	-

Postive Moment					
		Service I		Strength I	
	Unfactor Moment (k-ft/ft)	Load Factor	Factored Moment (k-ft/ft)	Load Factor	Factored Moment (k-ft/ft)
DC	0.77	1.00	0.77	1.25	0.96
DW	0.32	1.00	0.32	1.50	0.48
LL	6.26	1.00	6.26	1.75	10.96

Service I Postive Moment = 7.36 k-ft/ft
Strength I Postive Moment = 12.41 k-ft/ft

Negative Moment					
		Service I		Strength I	
	Unfactor Moment (k-ft/ft)	Load Factor	Factored Moment (k-ft/ft)	Load Factor	Factored Moment (k-ft/ft)
DC	0.96	1.00	0.96	1.25	1.20
DW	0.40	1.00	0.40	1.50	0.60
LL	4.69	1.00	4.69	1.75	8.21

Service I Negative Moment = 6.05 k-ft/ft
Strength I Negative Moment = 10.01 k-ft/ft

Design rebar for greater moment therefore design deck rebar per positive moment.

Transportation
Land Development
Environmental
Services

Computations

Vanasse Hangen Brustlin, Inc.

Project	Bridge #93	Project #	57632.00
Location	Castleton, VT	Sheet	
Calculated by	EAF	Date	4/18/14
Checked by	KBR	Date	4/23/14
Title	Hairpin Joint Reinforcement Design Check		

Determine Required amount of steel for ***positive moment (controls design)***

Depth, d =	8	in	
Width, b =	12	in	
Top Cover =	2.5	in	(per Vtrans Structural Manual Table 5.1.2.6-1)
Bottom Cover =	1.75	in	
f_s =	60	ksi	
f'_c =	4	ksi	(Class A, per VTrans table 5.1.1.1-1, conservative approach)
ϕ_f =	0.9		LRFD 5.5.4.2.1
Bar size =	#4		hooked bar
Bar diameter =	0.5	in	
Bar area =	0.200	in^2	
Spacing of bars =	3	in	At the joint, bars will be placed at 3" and at each individual beam, bars will be palced at 6"
No. of bars per foot =	4		
Area of steel, A_s =	0.8	in^2	
d_s =	6.00	in	
a =	1.18		(Modified 5.7.3.1.2-4 with "a" from 5.7.3.2.2)
M_n =	260	k-in	LRFD 5.7.3.2.2-1
M_r =	234	k-in	

M_r =	19	k-ft	>	12	k-ft	OK

Check minimum reinforcement (LRFD 5.7.3.3.2)

Minimum reinforcement shall be at least equal to the lesser of M_{cr} or 1.33 M_u

γ_1 =	1.6		For this check used higher f'c because it requires more steel. Check at f'c =10ksi
γ_3 =	0.67		
S_c =	128	in^3	
f_r =	0.76	ksi	LRFD 5.4.2.6
M_{cr} =	104	in-k	LRFD Eq. 5.7.3.3.2-1
M_{cr} =	9	ft-k	
$1.33M_u$ =	17	ft-k	
Minimum reinforcement requirement, M_u =	9	ft-k	
M_r =	19	OK	

2.2

Transportation
Land Development
Environmental
Services

Computations

Vanasse Hangen Brustlin, Inc.

Project	Bridge #93	Project #	57632.00
Location	Castleton, VT	Sheet	
Calculated by	EAF	Date	4/18/14
Checked by	KBR	Date	4/23/14
Title	Hairpin Joint Reinforcement Design Check		

Check control of cracking by distribution of reinforcement (LRFD 5.7.3.4)

(5.7.3.4-1) $\gamma_e =$ 1 Assume Class 1 exposure condition

$E_s =$ 29000 ksi

Find the stress in the steel

$E_c =$ 3834 ksi (5.4.2.4-1)

$n =$ 7.6

$M_{serv} =$ 7 k-ft

$A_s =$ 0.8 in^2

$\rho =$ 0.0083

$d_s =$ 6.0 in

$k =$ 0.298

$j =$ 0.901

$f_{ss} =$ 20.42 ksi

$d_c =$ 2.00 in

$h =$ 8 in

$\beta =$ 1.48

$s \leq$ 19 in OK

Transportation
Land Development
Environmental
Services

Computations

Vanasse Hangen Brustlin, Inc.

Project	Bridge #93	Project #	57632.00
Location	Castleton, VT	Sheet	
Calculated by	EAF	Date	4/18/14
Checked by	KBR	Date	4/23/14
Title	Hairpin Joint Reinforcement Design Check		

Determine Required amount of steel for negative moment

Depth, d =	8	in		
Width, b =	12	in		
Top Cover =	2.5	in		
Bottom Cover =	1.75	in		
f_s =	60	ksi		
f'_c =	4	ksi	(Class A)	
ϕ_f =	0.9			LRFD 5.5.4.2.1
Bar size =	#4			
Bar diameter =	0.5	in		
Bar area =	0.200	in^2		
Spacing of bars =	3	in		
No. of bars per foot =	4			
Area of steel, A_s =	0.8	in^2		
d_s =	5.25	in		
a =	1.18			(Modified 5.7.3.1.2-4 with "a" from 5.7.3.2.2)
M_n =	224	k-in		LRFD 5.7.3.2.2-1
M_r =	201	k-in		

M_r =	17	k-ft	>	6	k-ft	OK

Section 3.0

Bearing Design

VHB *Computations*

Project: Br #93 Project # 57632.00
Location: Castleton, VT Sheet of
Calculated by: EAF Date: 4/25/14
Checked by: CJH Date: 7/9/2014
Title Elastomeric Bearing Design

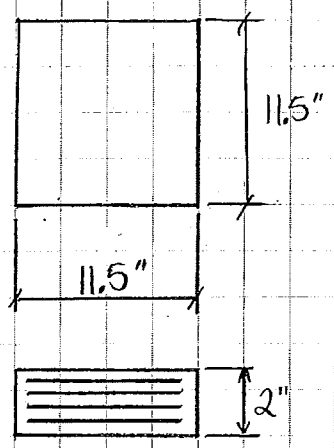

3- 1/2" Interior Layers
2- 1/8" Exterior Layers
4- 1/16" Steel Reinforcing Plates

Grade 60 Elastomer

ELASTOMERIC BEARING DETAIL
NTS

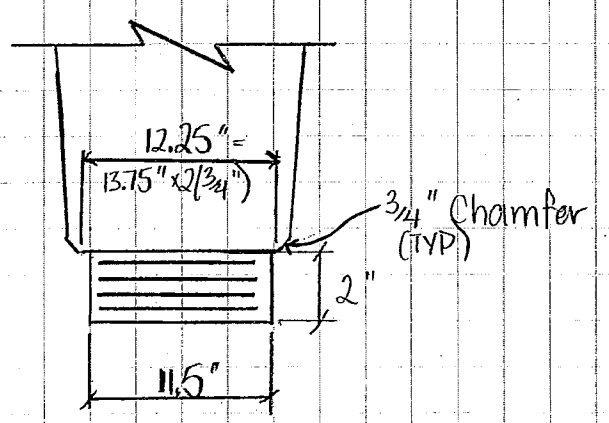

FRONT ELEVATION
NTS

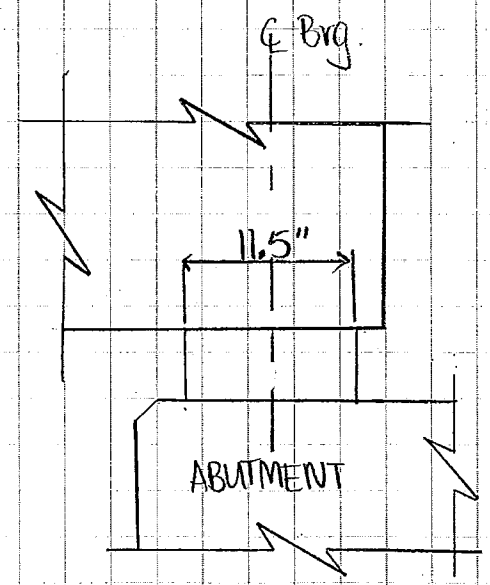

SIDE ELEVATION
NTS

Transportation
Land Development
Environmental
Services

Computations

Vanasse Hangen Brustlin, Inc.

Project	Bridge #93	Project #	57632.00
Location	Castleton, VT	Sheet	
Calculated by	EAF	Date	7/9/14
Checked by	CJH	Date	7/9/2014
Title	Elastomeric Bearing Design		

Elastomeric Bearing Design

Assumptions: [ ] =Input

Per VTrans Elastomeric Bearing to be Design using Method A

Surcharge from live load is not applicable due to application of curtain wall design and approach slab

Length of Abutment Along Skew = 36.80 ft

Bearing Design:

G_{min} =	0.13	ksi	(Minimum elastomer modulus for shore Hardness of 60, per LRFD 14.7.6.2)
G_{max} =	0.2		(Maximum elastomer modulus for shore Hardness of 60, per LRFD 14.7.6.2)
W =	11.5	in	(Design Pad Width)
L =	11.5	in	(Design Pad Length)
A=	132.25	in^2	
h_{ri} =	0.5	in	
h_{rt} =	2.00	in	
	0.35	in	Creep Deflection at 25 years
S =	5.75		(Shape Factor, per LRFD 14.7.5.1-1)
# beams =	4	ea	

# of interior layers	3	thickness of interior layers (in)	0.5	
# of exterior layers	2	thickness of exterior layers (in)	0.125	
# of steel plates	4	thickness of reinforcing plates (in)	1/16	OK
		Subtotal Thickness =	2	inches

$$S = \frac{L*W}{2*h_{ri}(L+W)}$$

Checks:

$$\frac{L}{3} \;\&\; \frac{W}{3} \geq h_{rt}$$

L/3 Check **OK**

W/3 Check **OK**

Loads from Conspan Outputs (Service Loads):

Dead Load:

Interior Beam DL at stem =	33.2625	k
Exterior Beam DL at stem =	37.2625	k
P_D (Max DL)=	37.2625	k

Live Load:

Interior Beam LL + I at stem =	50	k	(LL+I, Vmx)
Exterior Beam LL + I at stem =	45.95	k	
Impact factor =	1.33		
P_{LL} (Max LL without impact)=	37.59	k	
P_{LL+I} (Max LL with impact)=	50	k	

Earth Pressure Lateral Loads:

Preliminary Abutment Height =	9.23	ft	(Ht. from bottom of 28D Beam to Bottom of Cap)
ϕ, (friction angle) =	34	degrees	(From Geotech Report, Table 7.1)
ϒ, (Soil unit weight) =	140	pcf	(From Geotech Report, Table 7.1)
Ka (Active Earth Pressure Coefficient)=	0.280		(From Geotech Report, Table 7.1)

P_E (along abutment)= 1.671 klf = $P_E = \frac{Ka*\gamma*h^2}{2}$

P_E = 7.69 k per bearing

Transportation
Land Development
Environmental
Services

Computations

Vanasse Hangen Brustlin, Inc.

Project	Bridge #93	Project #	57632.00
Location	Castleton, VT	Sheet	
Calculated by	EAF	Date	7/9/14
Checked by	CJH	Date	7/9/2014
Title	Elastomeric Bearing Design		

Elastomeric Bearing Design

Dead Loads from Backwall:

Area of Concrete

Plan Area under beams (from CL Brg to Front face of abutments):	43.00	SF	* conservative because leaving in concrete for stems
28" NEXT Beam - 8" Top Slab = 20" Depth:	1.67	ft	
XS Area between stems and App. Slab =	3.86	sf	
Length of Abut under app slabs =	36.89	ft	
total VOLUME:	214.05	CF	

Weight of end =	32.11	kips	(Weight of concrete 150 pcf per VTrans)
	8.03	kips	(Weight distributed to beam), divide by 4
P_{CW} =	4.01	kips	(Weight distributed to stem), divide by 2

Dead Loads from Approach Slab:

Area of Concrete

Unsupported Length =	18.40	ft	(From Geotech Loads)
Thickness =	1.25	ft	per SM 2.6.3
Width =	31	ft	
Area =	38.75	ft^2	
	150	pcf	(Weight of concrete 150 pcf per VTrans)
	5.8125	klf	(Uniform Weight of approach slab)
P_{Appr} =	53.48	kips	
	6.69	kips	per bearing

Live Loads from Approach Slab:

Lane Load =	0.64	klf
x	2	lanes
	1.28	klf

Unsupported Length =	18.40	ft	(From Geotech Loads)
$P_{Vehicle}$ =	11.777216	k	per abutment
	1.47	k	per bearing

Transportation
Land Development
Environmental
Services

Computations

Vanasse Hangen Brustlin, Inc.

Project	Bridge #93	Project #	57632.00
Location	Castleton, VT	Sheet	
Calculated by	EAF	Date	7/9/14
Checked by	CJH	Date	7/9/2014
Title	Elastomeric Bearing Design		

Elastomeric Bearing Design

Check Compressive Stress:

For steel reinforced elastomeric bearings: (per LRFD 14.7.6.3.2-7 & 8)

$$\sigma_s = \frac{P_D + P_{LL+I} + P_{Vehicle} + P_{CW} + P_{Appr}}{A}$$

P_D =	37.26 k	A =	132.25 sq. in.	P_{Appr} =	6.69 k
P_{LL+I} =	50.00 k	P_{CW} =	4.01 k	$P_{Vehicle}$ =	1.47 k

$\sigma_s \le 1.25$

σ_S =	0.75	<	1.25	OK

$\sigma_s \le 1.25 * G * S$

σ_S =	0.752	<	0.934	OK	G_{min}
	0.752	<	1.44	OK	G_{max}

Check Compressive Deflection:

For steel reinforced elastomeric bearings: (per AASHTO C14.7.5.3.6-1)

$$\delta_L = \sum \varepsilon_{Li} * h_{ri}$$ Instantaneous Live Load Deflection

$$\varepsilon_L = \frac{\sigma}{4.8 * G * S^2}$$ Instantaneous live load compressive strain in *i* th elastomer layer

σ_L =	0.389
ε_L =	0.019 G_{min}
ε_L =	0.012 G_{max}

G_{min}	δ_L =	0.0094	<	0.125	OK
G_{max}	δ_L =	0.0061	<	0.125	OK

$$\delta_D = \sum \varepsilon_{Di} * h_{ri}$$ Instantaneous Dead Load Deflection

$$\varepsilon_D = \frac{\sigma}{4.8 * G * S^2}$$ Instantaneous dead load compressive strain in *i* th elastomer layer

σ_D =	0.363
ε_D =	0.018 G_{min}
ε_D =	0.011 G_{max}

G_{min}	δ_D =	0.0088	<	0.125	OK
G_{max}	δ_D =	0.0057	<	0.125	OK

Transportation
Land Development
Environmental
Services

Computations

VHB Vanasse Hangen Brustlin, Inc.

Project	Bridge #93	Project #	57632.00
Location	Castleton, VT	Sheet	
Calculated by	EAF	Date	7/9/14
Checked by	CJH	Date	7/9/2014
Title	Elastomeric Bearing Design		

Elastomeric Bearing Design

Check Compression Deflection (continued)

For steel reinforced elastomeric bearings: (per AASHTO C14.7.6.3.3)

Compression under instanstaneous live load and intial dead load at service limit state without impact shall not exceed 0.09hri

$$\delta_D + \delta_D(Creep) + \delta_{LL} < 0.09 * h_{ri}$$

δ_D =	0.009	in	G_{min}	
δ_D =	0.006	in	G_{max}	
	0.35	in	Creep deflection at 25 year	
δ_L =	0.014	in	with no impact	G_{min}
δ_L =	0.009	in	with no impact	G_{max}

G_{min}	0.026	<	0.045	OK
G_{max}	0.017	<	0.045	OK

Check Shear:

For steel reinforced elastomeric bearings: (per AASHTO C14.6.3.1-2)

Solve for Δu

$$\frac{H_{bu} * h_{rt}}{G * A} = \Delta_u$$

H_{bu} =	P_E		
	7.69	k	
h_{rt} =	2.00	in	
G =	0.13	ksi	use minimum value from table 14.7.6.2
A =	132.25	in^2	
Δ_u =	0.89		

For shear $h_{rt} \geq 2\Delta_s$ $\Delta_u = \Delta_s$ (per AASHTO C14.7.6.3.4)

2	≥	1.79	OK

Transportation
Land Development
Environmental
Services

Computations

Vanasse Hangen Brustlin, Inc.

Project	Bridge #93	Project #	57632.00
Location	Castleton, VT	Sheet	
Calculated by	EAF	Date	7/9/14
Checked by	CJH	Date	7/9/2014
Title	Elastomeric Bearing Design		

Elastomeric Bearing Design

Determine the minimum thickness for reinforcement:

For steel reinforced elastomeric bearings: (per AASHTO C14.7.5.3.5)

h_s =	0.0625	in	steel plate thickness
h_{ri} =	0.5	in	
σ_s =	0.75		
F_y =	60	ksi	yield strength of steel

$$h_s \geq \frac{3 * h_{ri} * \sigma_s}{F_y}$$

0.0625 ≥ 0.019 **OK**

Check if anchor bolts are not required:

For steel reinforced elastomeric bearings: (per AASHTO C14.8.3.1)

H_u = P_E

7.69 k Horizontal Load

Minimum Vertical Load = 47.96 k

Coefficient of friction = 0.2

$$Coefficient_of_Friction * Vertical_Load \geq Horizontal_Load$$

9.59 ≥ 7.69 **OK**

Section 4.0

Approach Slab Design

VHB *Computations*

Project: Br #93 Project # 57632.00
Location: Castleton, VT Sheet of
Calculated by: Date: 1/30/14
Checked by: KBR Date: 4/23/14
Title Approach Slab Design

Approach Slab Layout:

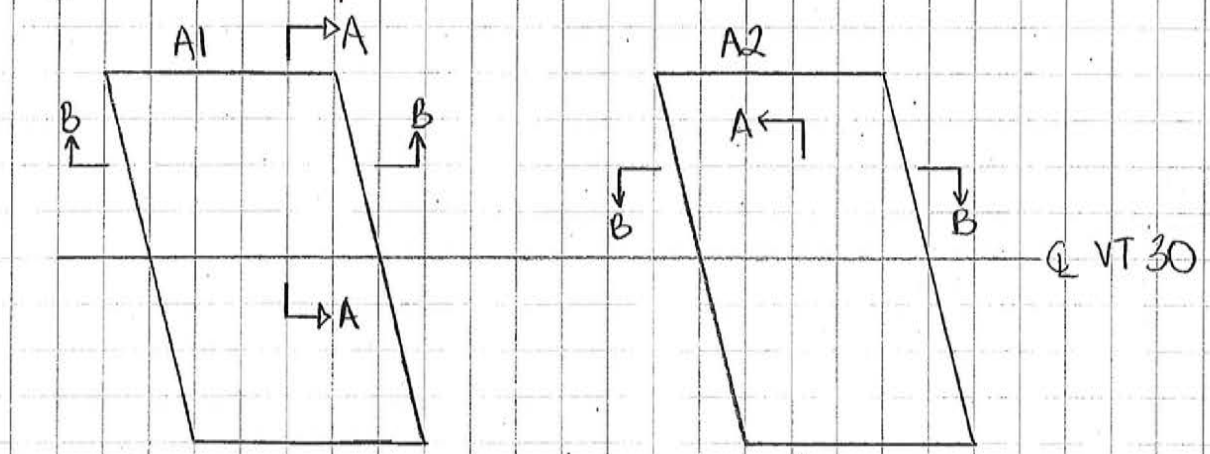

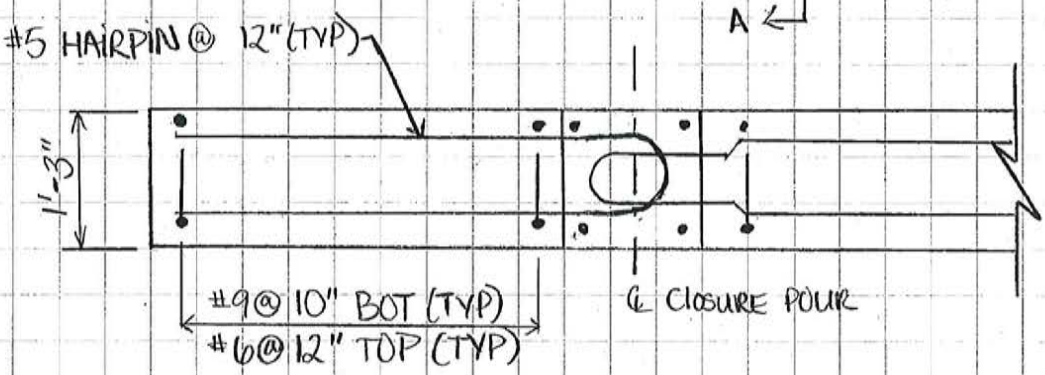

SECTION A-A

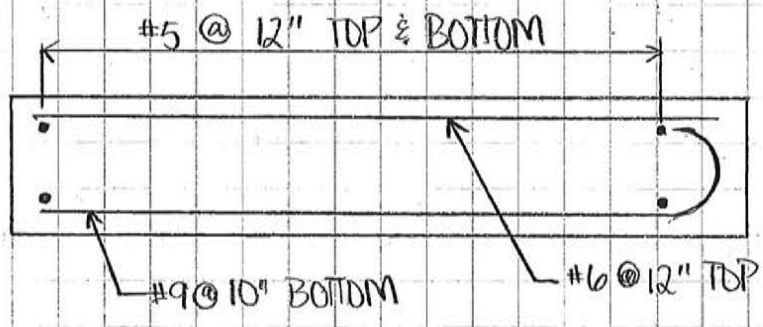

SECTION B-B

Transportation
Land Development
Environmental
Services

Computations

Vanasse Hangen Brustlin, Inc.

Project	Bridge No. 93	Project #	57632.00
Location	Castleton, VT	Sheet	
Calculated by	EAF	Date	1/30/14
Checked by	KBR	Date	4/23/14
Title	Approach Slab Reinforcing Check		

Approach Slab loading for a 1' wide strip

Approach Slab Length =	20	ft
Approach Slab Depth =	1.25	ft
Weight of Concrete =	150	lb/ft^3
Depth of FWS =	0.333	ft
Curb-Curb of Bridge =	31.00	ft

(used http://www.fhwa.dot.gov/bridge/lrfd/pscus71.htm as an example for Approach Slab Design)

w_{self} = 0.1875 k/ft
w_{fws} = 0.05 k/ft

Factored distribute dead loading:
$w_{Str\,1}$ = 0.31 k/ft

Live load distribution width (4.6.2.3)
The equivalent strip width of longitudinal strips per lane for both shear and moment is calcualted according to the provisions of 4.6.2.3.

For single lane loaded: $E = 10 + 5\sqrt{L_1 W_1}$ 4.6.2.3-1

For multiple lanes loaded: $E = 84.0 + 1.44\sqrt{L_1 W_2} \leq \frac{12.0W}{N_1}$ 4.6.2.3-2

L_1 =	20	ft
W_1 =	30.00	ft
W =	31.00	ft
N_L =	2	design lanes
E_{single} =	132.47	in
$E_{multiple}$ =	119.27	in <= 186 in

Therefore, the equivalent strip width, E = 119.27 in

Live Load Maximum Moment:

Lane Load: max moment =	32	k-ft
Truck Load: max moment =	143.54	k-ft, from Quickbridge analysis for 18.58' span and HL93 Loading
Total LL + IM =	222.90	k-ft
Tot. LL + IM moment per unit width of slab =	22.43	k-ft/ft

From VTrans Structures Manual:

$$Design\ Span = L - 0.5 * [0.25 * L + Abutment\ Bracket]$$

Transportation
Land Development
Environmental
Services

Computations

VHB Vanasse Hangen Brustlin, Inc.

Project	Bridge No. 93	Project #	57632.00
Location	Castleton, VT	Sheet	
Calculated by	EAF	Date	1/30/14
Checked by	KBR	Date	4/23/14
Title	Approach Slab Reinforcing Check		

Maximum factored positive moment per unit width of slab due to dead load plus live load:

$$M_u = \frac{wl^2}{8} + 1.75(LL + IM\ moment)$$

M_u = 54.71 k-ft

Factored flexural resistance, M_r = $M_r = \varphi M_n$ 5.7.3.2.1-1

(Bottom Transverse Bars)

$$M_n = A_s F_y (d - \frac{a}{2})$$

where:

Bot. Reinforcing =	9	
Bottom Spacing =	10	in
Bottom d_b =	1.128	in
Bottom A_s =	1	in^2
A_s provided =	1.2	in^2
cover =	3	in
F_y =	60	ksi
d =	11.436	in
f'c =	4.0	ksi
b =	12	in

$$a = \frac{A_s f_y}{0.85 f'_c b}$$ (5.7.3.1.1-4)

a = 1.765 in

M_n = 63.32 k-ft

φ = 0.9

Therefore: M_r = 56.99 k-ft > M_u OK

Bottom distribution reinforcement (9.7.3.2)

For main reinforcement parallel to traffic, the minimum distribution reinforcement is taken as a percentage of the main reinforcement:

$$\frac{100}{\sqrt{S}} \leq 50\%$$

where s = 20 ft conservatively assume approach slab length

100/(sqrt(S)) = 22.36 %

Main Reinforcement = 0.833 in^2/ft

Required distribution reinforcement = 0.186 in^2/ft

Use #5 @ 12" hairpin bars = 0.31 in^2/ft

Check if min reinforcing ok: OK

VHB *Computations*

Project: Br #93 Project # 57632.00
Location: Castleton, VT Sheet of
Calculated by: EAF Date: 4/25/14
Checked by: Date:
Title Approach Slab Elevations

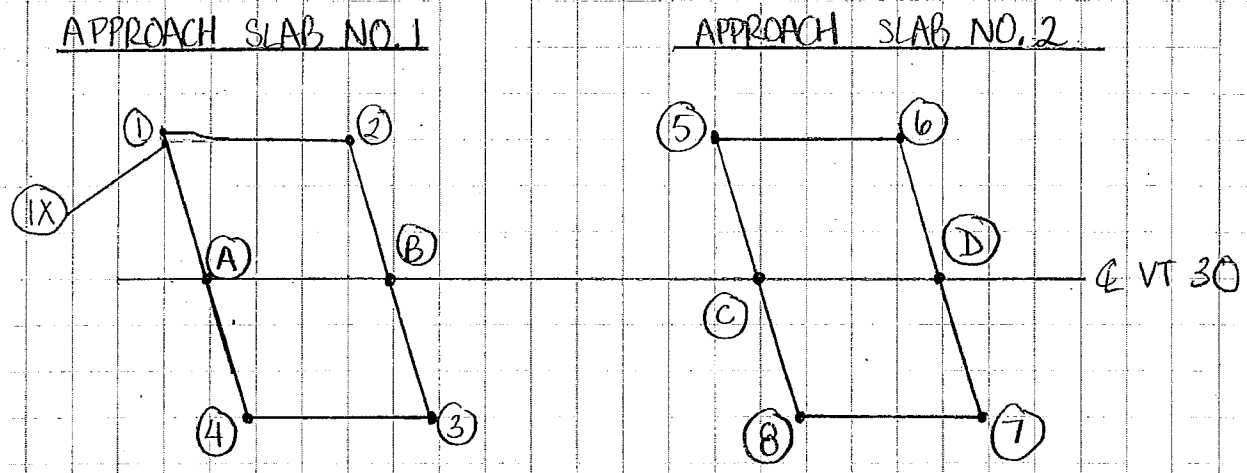

- From F.G. elevation, subtract 4" of pavement for top of concrete slab elevations (4" pavement matches pavement @ bridge ends)

Point	Station, Offset	Elevation (as determined from profile)	
1	65+75.34, 16.0' LT	409.514 - 0.02(16) = 409.19 - 4.0/12	= 408.86
2	65+95.50, 15.5' LT	410.5874 - 0.02(15.5) = 410.28	= 409.95
3	66+05.57, 15.5' RT	411.073 - 0.02(15.5) = 410.76	= 410.43
4	65+85.57, 15.5' RT	410.075 - 0.02(15.5) = 409.77	= 409.44
A	65+80.54, 0'	409.803 - 0.02(0) = 409.80	= 409.47
B	66+00.54, 0'	410.8349 ⇒ 410.83	= 410.50
5	66+65.61, 15.5' LT	413.273 - 0.02(15.5) = 412.96	= 412.63
6	66+85.61, 15.5' LT	413.741 - 0.02(15.5) = 413.43	= 413.10
7	66+95.68, 15.5' RT	413.927 - 0.02(15.5) = 413.62	= 413.29
8	66+75.68, 15.5' RT	413.526 - 0.02(15.5) = 413.22	= 412.89
C	66+70.64, 0'	413.404 - 0 = 413.40	= 413.07
D	66+90.64, 0'	413.838 ⇒ 413.84	= 413.51
1X	65+75.50, 15.5' LT	409.52 - 0.02(15.5) = 409.21 - 4.0/12	= 408.88

Project:	Br # 93	**VHB Proj #:**	57632
Location:	Castleton, VT	**Sheet:**	__ of ___
Calculated By:	EAF	**Date:**	6/3/2014
Checked By:		**Date:**	
Title:	Approach Slab Elevations		

FOR THE APPROACH SLABS, FOLLOW SAME SLOPE ALONG SKEW AS ABUTMENT SEAT

Length of Approach Slab = 20 FT
Assumed 4" of Pavement from Hand Calcs = 0.333333 ft

Hold elevations at Abutment, Update at end of App Slab

Adjust the slopes to make pavement more uniform across approach slab

Hold elevations at Abutment, Update at end of App Slab

From Hand Calcs:

Point	Elevation at top of pavement per plans		Slope from CL	Distance along CL	EL from CL	Total Pavement Depth	UP STATIONING Verify Slope from Start/End	Choose Even Slope along road	New Bot Pave Elev	Pavement Depth	Top of Conc. App Slab
	Top App	Top Pave									
1X	408.88	409.21			408.9713	2.904515	-5.15%		408.9613	3.024515	408.96
			-3.06%	16.2977							OK
A	409.47	409.80			409.47	4	-5.15%	-5.20%	409.46	4.12	409.46
			-0.80%	16.2977							OK
4	409.44	409.77			409.3396	5.204579	-5.15%		409.3296	5.324579	409.33
2	409.95	410.28			410.0013	3.384515				3.384515	410.00
			-3.06%	16.2977							
B	410.50	410.83			410.50	4				4	410.50
			-0.80%	16.2977							
3	410.43	410.76			410.3696	4.724579				4.724579	410.37
5	412.63	412.96			412.5713	4.704515				4.70	412.57
			-3.06%	16.2977							OK
C	413.07	413.40			413.07	4				4	413.07
			-0.80%	16.2977							OK
8	412.89	413.22			412.9396	3.404579				3.404579	412.94
6	413.10	413.43			413.0113	5.064515	2.20%		413.0013	5.184515	413.00
			-3.06%	16.2977							
D	413.51	413.84			413.51	4	2.20%	2.15%	413.5	4	413.51
			-0.80%	16.2977							
7	413.29	413.62			413.3796	2.924579	2.20%		413.3696	3.044579	413.37

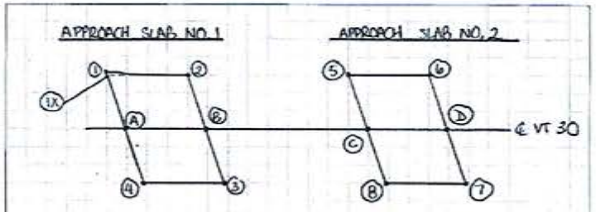

- From F.E. elevation, subtract 4" of pavement for top of concrete slab elevations (4" pavement matches pavement @ bridge ends)

Point	Station, Offset	Elevations (determined from profile)
1	65+79.34, 16.0' LT	409.514-0.02(16) = 409.19 - 4.0/12 = 408.86
2	65+95.50, 15.5' LT	410.6874-0.02(15.5) = 410.28 = 409.95
3	66+05.57, 15.5' RT	411.073-0.02(15.5) = 410.76 = 410.43
4	65+85.57, 15.5' RT	410.075-0.02(15.5) = 409.77 = 409.44
A	65+80.54, 0'	409.803-0.02(0) = 409.80 = 409.47
B	66+00.54, 0'	410.8349 → 410.83 = 410.50
5	66+65.61, 15.5' LT	413.273-0.02(15.5) = 412.96 = 412.63
6	66+85.61, 15.5' LT	413.741-0.02(15.5) = 413.43 = 413.10
7	66+95.68, 15.5' RT	413.927-0.02(15.5) = 413.62 = 413.29
8	66+75.68, 15.5' RT	413.526-0.02(15.5) = 413.22 = 412.89
C	66+70.64, 0'	413.404-0 = 413.40 = 413.07
D	66+90.64, 0'	413.838 → 413.84 = 413.51
1X	65+75.50, 15.5' LT	409.52-0.02(15.5) = 409.21 - 4.0/12 = 408.88

Vanasse Hangen Brustlin, Inc.

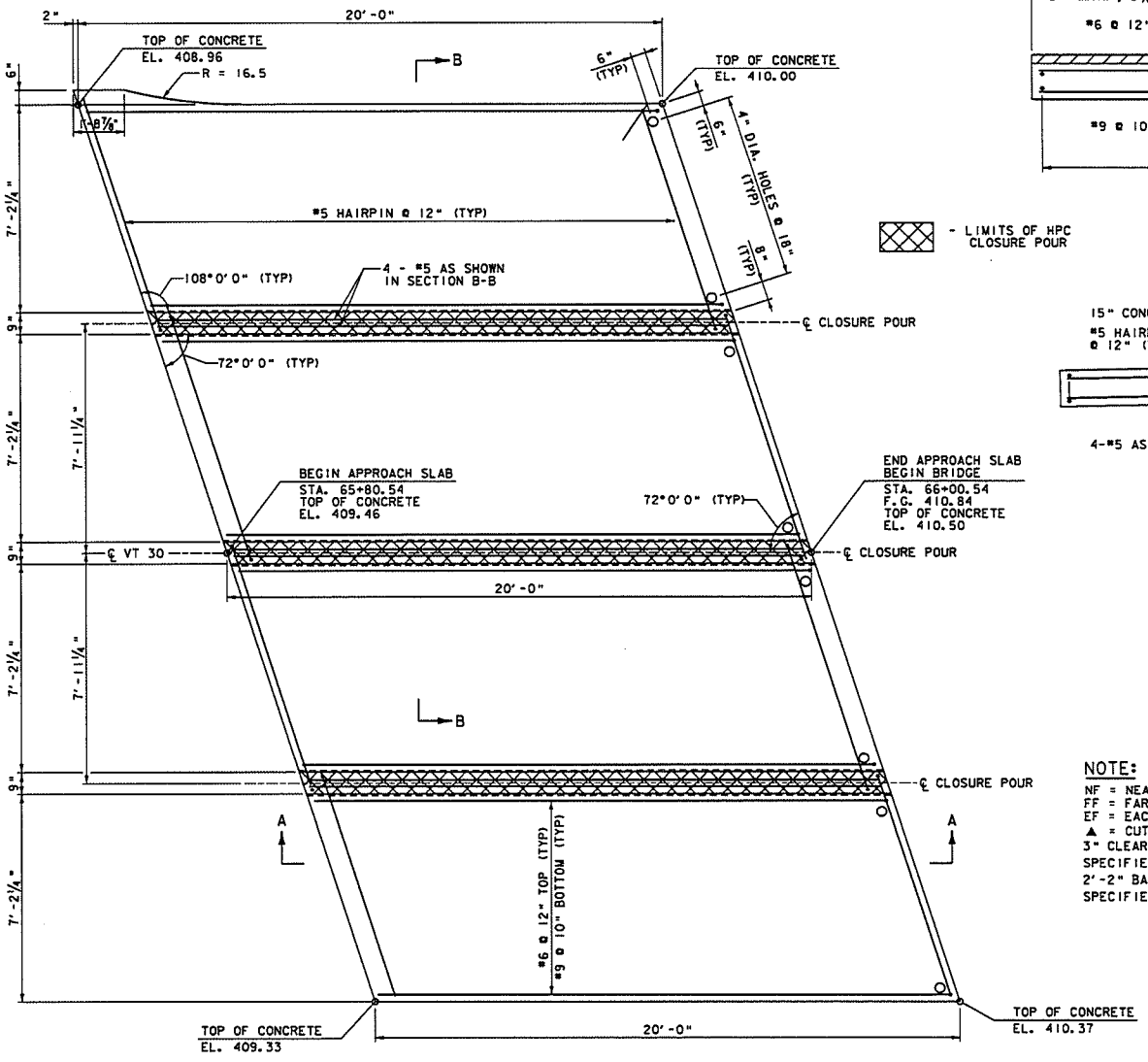

APPROACH SLAB NO 1 PLAN
SCALE 1/2" = 1'-0"

- LIMITS OF HPC CLOSURE POUR

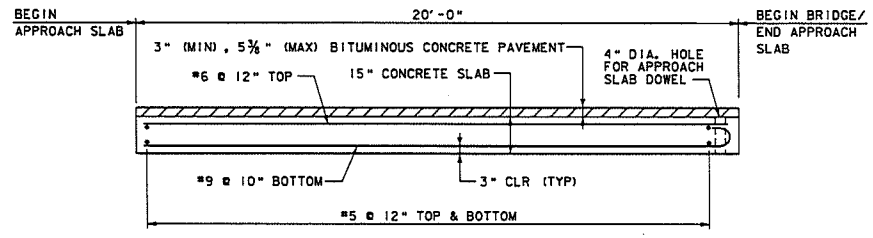

SECTION A-A
SCALE 1/2" = 1'-0"

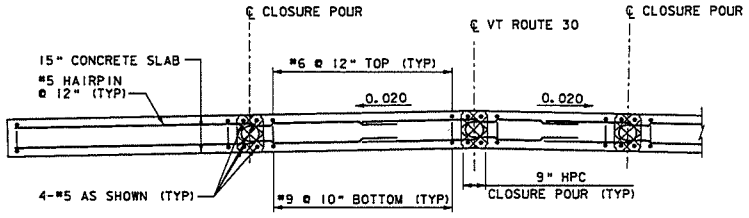

SECTION B-B
SCALE 1/2" = 1'-0"

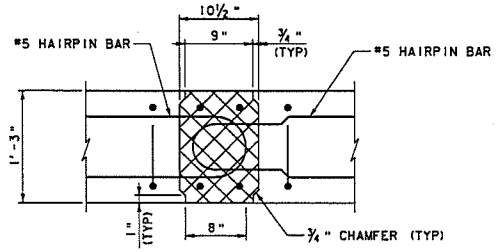

JOINT DETAIL
SCALE 1 1/2"=1'-0"

NOTE:
NF = NEAR FACE
FF = FAR FACE
EF = EACH FACE
▲ = CUT TO FIT IN FIELD
3" CLEAR, UNLESS OTHERWISE SPECIFIED ON THE PLANS.
2'-2" BAR LAP UNLESS OTHERWISE SPECIFIED ON THE PLANS.

NOTES:

1. LIFTING POINTS IN APPROACH SLABS TO BE LOCATED BY FABRICATOR.
2. CONTRACTOR SHALL PROVIDE METHOD AND DETAILS FOR ESTABLISHING CONTINUOUS CONTACT WITH SUBGRADE AND SUPPORT FOR PRECAST APPROACH SLABS WITH SHOP DRAWINGS.
3. MEMBRANE WATERPROOFING, SPRAY APPLIED SHALL BE APPLIED 2' ONTO APPROACH SLAB.

VHB Vanasse Hangen Brustlin, Inc.

PROJECT NAME: CASTLETON	
PROJECT NUMBER: BRF 015-2(10)	
FILE NAME: z12b138slab.dgn	PLOT DATE: 7/14/2014
PROJECT LEADER: S.E. BURBANK	DRAWN BY: E.A. FIALA
DESIGNED BY: E.A. FIALA	CHECKED BY: S.E. BURBANK
PRECAST APPROACH SLAB (1 OF 2)	SHEET 44 OF 81

VHB 57632

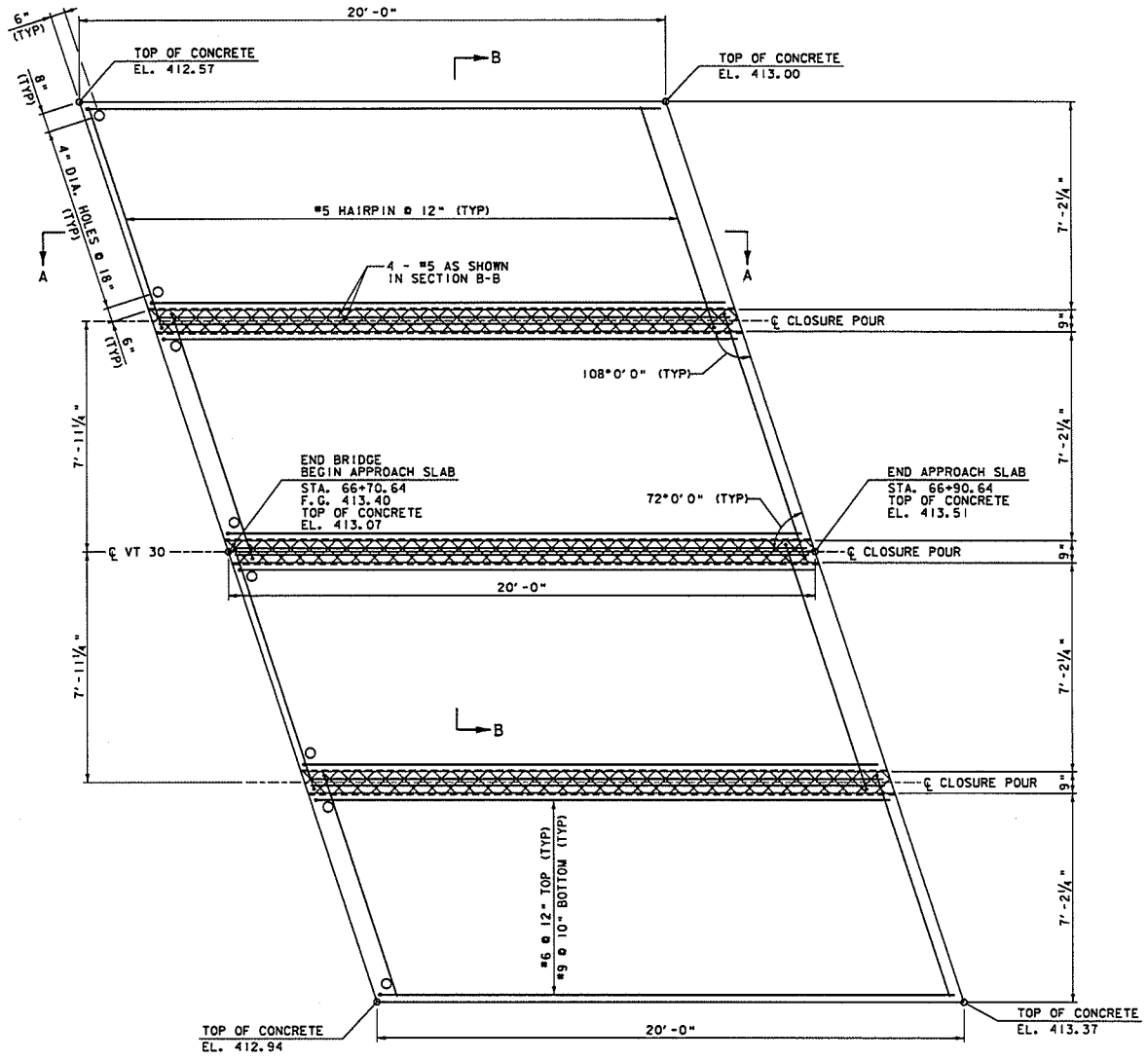

APPROACH SLAB NO 2 PLAN

SCALE ½" = 1'-0"

NOTE:

NF = NEAR FACE
FF = FAR FACE
EF = EACH FACE
▲ = CUT TO FIT IN FIELD
3" CLEAR, UNLESS OTHERWISE SPECIFIED ON THE PLANS.
2'-2" BAR LAP UNLESS OTHERWISE SPECIFIED ON THE PLANS.

- LIMITS OF HPC CLOSURE POUR

NOTES:

1. LIFTING POINTS IN APPROACH SLABS TO BE LOCATED BY FABRICATOR.
2. CONTRACTOR SHALL PROVIDE METHOD AND DETAILS FOR ESTABLISHING CONTINUOUS CONTACT WITH SUBGRADE AND SUPPORT FOR PRECAST APPROACH SLABS WITH SHOP DRAWINGS.
3. MEMBRANE WATERPROOFING, SPRAY APPLIED SHALL BE APPLIED 2' ONTO APPROACH SLAB.
4. SEE PRECAST APPROACH SLAB (1 OF 2) FOR JOINT DETAIL, SECTION A-A, AND SECTION B-B.

Vanasse Hangen Brustlin, Inc.

PROJECT NAME: CASTLETON	
PROJECT NUMBER: BRF 015-2(10)	
FILE NAME: z12b138slab.dgn	PLOT DATE: 7/14/2014
PROJECT LEADER: S.E. BURBANK	DRAWN BY: E.A. FIALA
DESIGNED BY: E.A. FIALA	CHECKED BY: S.E. BURBANK
PRECAST APPROACH SLAB (2 OF 2)	SHEET 45 OF 81

VHB 57632

Section 5.0

Precast Concrete Curb Height

VHB *Computations*

Project: Br #93 | Project # 57632.00
Location: Castleton, VT | Sheet of
Calculated by: EAF | Date: 7/16/14
Checked by: WPR | Date: 7/17/14
Title Precast Concrete Curb Height

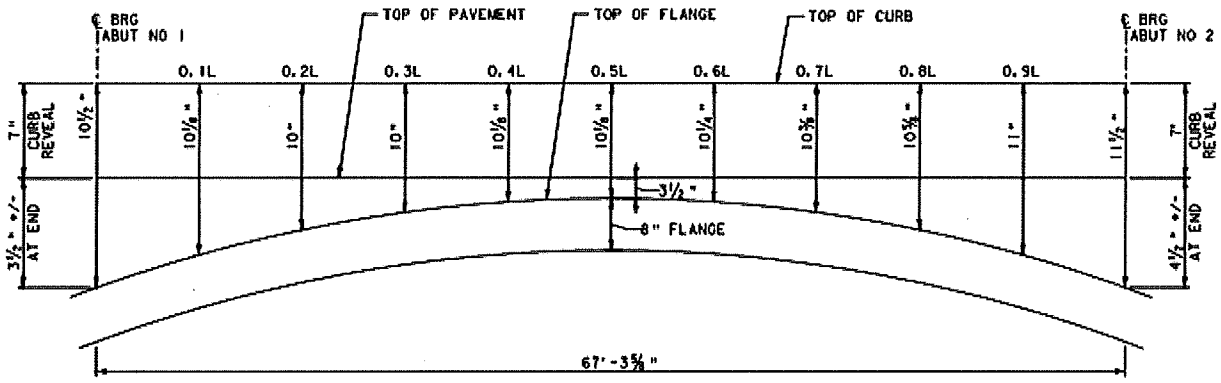

CURB HEIGHT DETAIL
NOT TO SCALE
(BEAM 1 SHOWN, BEAM 4 SIMILAR BY 180° ROTATION)

Curb height allows for 3½" at midspan and ~4"+/- of pavement at beam ends (@ midspan, conservatively allows for ¼" tolerance).

VHB **Computations**

Project:	Br 93	Project No.	57632.00
Location:	Castleton, VT	Sheet	
Calculated by:	EAF	Date:	1/23/14
Checked by:		Date:	
Title:	Vertical Curve Ordinate		

Profile Information **English Units**

- ☐ Enter curve data
- ☐ Enter desired station intervals
- ☐ Enter specific locations of interest

$g = (e_2-e_1)/(sta_2-sta_1)$

$r = (g_2-g_1)/L_{curve}$

Key: **Input**

Curve Data

		Station	Elevation	L_{curve}		Grade (g)	r
Begin Point	PVI 1	**64+66.09**	**402.11**	**100**			
	PVT	65+16.09	405.63				
					Tangent 1	7.04%	
	PVC	65+33.54	406.86				
Curve 1	PVI 2	**66+33.54**	**413.90**	**200.00**			#########
	PVT	67+33.54	414.32				
					Tangent 2	0.42%	
	PVC	67+61.00	414.44				
End Point	PVI 3	**68+36.00**	**414.76**	**150.00**			
	PVT	69+11.00	414.83				
						0.09%	

VHB

Computations

Project:	Br 93	Proj #	57632.00
Location:	Castleton, VT	Sheet	
Calculated by:	EAF	Date:	6/10/14
Checked by:	WPR	Date:	7/17/2014
Title:	Vertical Curve Ordinate		

Station Data — **English Units**

Input in shaded cells

Elevation = $(^1/_2)*x^2 + g_1*x + c$

EL = FG Elevation + Δ EL

*Δ EL = Offset*Cross Slope =* -0.310 ft = (4.5"+8.1875'+9"+(8.1875'-2 Curb)) * -2.0% AT FACE OF CURB

Deck =precast with beam = ft

Finished Grade Elevations

	Station	*FG EL*	*Δ*	*EL*	Level Line	*VC*
Exterior Girder 1		PGL	(ft)			
CL Brg. Abut 1	65+96.90	410.66	-0.31	410.35	410.35	0.000
0.1L1	66+03.63	410.98	-0.31	410.67	410.60	0.809
0.2L1	66+10.36	411.29	-0.31	410.98	410.86	1.438
0.3L1	66+17.09	411.59	-0.31	411.28	411.12	1.888
0.4L1	66+23.82	411.87	-0.31	411.56	411.38	2.158
0.5L1	66+30.55	412.13	-0.31	411.82	411.64	2.247
0.6L1	66+37.28	412.38	-0.31	412.07	411.89	2.158
0.7L1	66+44.01	412.62	-0.31	412.31	412.15	1.888
0.8L1	66+50.74	412.84	-0.31	412.53	412.41	1.438
0.9L1	66+57.47	413.04	-0.31	412.73	412.67	0.809
CL Brg. Abut 2	66+64.20	413.23	-0.31	412.92	412.92	0.000

Value = 2.58 ft

ELEVATIONS:

	Station	FG EL	Profile EL @ CL Beam	Top of beam Straight Line EL	Camber (in) (at erection, Serv 1)	Camber Vert. Curve (in)	Conspan Top of Beam Elev.	Adjust curb for abutment slopes:	From Top of Beam to profile EL	Verify Pavement depth >= 0.25'	Curb Height (ft)	Verify Curb Height >= 10"	
Exterior Girder 1		PGL											
CL Brg. Abut 1	65+96.90	410.66	410.35	410.01	0	0.000	410.01	0.042	0.29	OK	0.875	OK	10 4/8
0.1L1	66+03.63	410.98	410.67	410.27	1.258	0.449	410.38	0.033	0.26	OK	0.846	OK	10 1/8
0.2L1	66+10.36	411.29	410.98	410.53	2.087	0.649	410.70	0.025	0.25	OK	0.838	OK	10
0.3L1	66+17.09	411.59	411.28	410.79	2.671	0.783	411.01	0.017	0.25	OK	0.835	OK	10
0.4L1	66+23.82	411.87	411.56	411.04	2.994	0.836	411.29	0.008	0.26	OK	0.839	OK	10 1/8
0.5L1	66+30.55	412.13	411.82	411.30	3.097	0.850	411.56	0.000	0.26	OK	0.846	OK	10 1/8
0.6L1	66+37.28	412.38	412.07	411.56	2.994	0.836	411.81	-0.008	0.27	OK	0.855	OK	10 2/8
0.7L1	66+44.01	412.62	412.31	411.82	2.671	0.783	412.04	-0.017	0.28	OK	0.868	OK	10 3/8
0.8L1	66+50.74	412.84	412.53	412.08	2.087	0.649	412.25	-0.025	0.30	OK	0.888	OK	10 5/8
0.9L1	66+57.47	413.04	412.73	412.33	1.258	0.449	412.44	-0.033	0.33	OK	0.913	OK	11
CL Brg. Abut 2	66+64.20	413.23	412.92	412.59	0	0.000	412.59	-0.042	0.38	OK	0.958	OK	11 4/8

Pavement thickness at CL brg = 0.333 ft

NEXT Beam depth = 28 in

FG Beam 1 Elev @ Abut 1 = 410.35

Bottom of beam 1 Elev at Abut 1= **407.68**

FG Beam 1 Elev @ Abut 2 = 412.92

Bottom of beam 1 Elev at Abut 2= 410.26

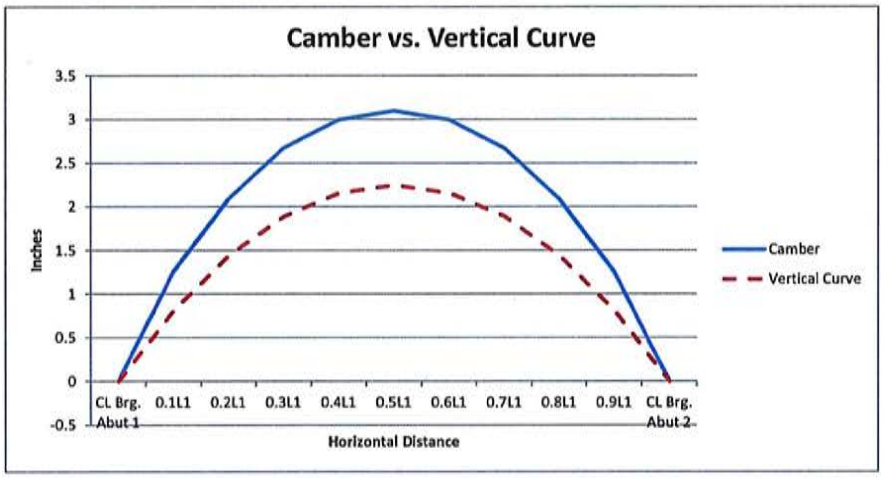

VHB

Computations

Project:	Br 93	Proj #	57632.00
Location:	Castleton, VT	Sheet	
Calculated by:	EAF	Date:	1/23/14
Checked by:	WPR	Date:	7/17/2014
Title:	Vertical Curve Ordinate		

Station Data — **English Units**

Input in shaded cells

Elevation = $(^{f}/_{2})*x^2 + g_1*x + c$

EL = FG Elevation + Δ EL

*Δ EL = Offset*Cross Slope =* (4.5"+8.1875'/2) * -2.0% = -0.089 ft

Deck =precast with beam = ft

Finished Grade Elevations

	Station	*FG EL*	*Δ*	*EL*	Level Line	*VC*
Interior Girder 2		PGL	(ft)			
CL Brg. Abut 1	66+00.49	410.83	-0.09	410.74	410.74	0.000
0.1L1	66+07.22	411.15	-0.09	411.06	410.99	0.809
0.2L1	66+13.95	411.45	-0.09	411.36	411.24	1.438
0.3L1	66+20.68	411.74	-0.09	411.65	411.49	1.888
0.4L1	66+27.41	412.01	-0.09	411.92	411.74	2.158
0.5L1	66+34.14	412.27	-0.09	412.18	411.99	2.247
0.6L1	66+40.87	412.51	-0.09	412.42	412.24	2.158
0.7L1	66+47.60	412.74	-0.09	412.65	412.49	1.888
0.8L1	66+54.33	412.95	-0.09	412.86	412.74	1.438
0.9L1	66+61.06	413.15	-0.09	413.06	412.99	0.809
CL Brg. Abut 2	66+67.79	413.33	-0.09	413.24	413.24	0.000

Value = 2.50 ft

ELEVATIONS:

	Station	FG EL	Profile EL @ CL Beam	Top of beam Straight Line EL	Camber (in) (at erection, Serv 1)	Camber Vert. Curve (in)	Conspan Top of Beam Elev.	From Top of Beam to profile EL	Verify Pavement depth >= 0.25'	
Interior Girder 2		PGL								
CL Brg. Abut 1	66+00.49	410.83	410.74	410.41	0	0.000	410.41	0.33	OK	
0.1L1	66+07.22	411.15	411.06	410.66	1.319	0.510	410.77	0.29	OK	
0.2L1	66+13.95	411.45	411.36	410.91	2.208	0.770	411.09	0.27	OK	
0.3L1	66+20.68	411.74	411.65	411.16	2.839	0.951	411.40	0.254	OK	
0.4L1	66+27.41	412.01	411.92	411.41	3.192	1.034	411.67	0.247	NG	
0.5L1	66+34.14	412.27	412.18	411.66	3.305	1.058	411.93	0.245	NG	Say ok, off by .0051 or 0.06"
0.6L1	66+40.87	412.51	412.42	411.91	3.192	1.034	412.17	0.247	NG	
0.7L1	66+47.60	412.74	412.65	412.16	2.839	0.951	412.39	0.25	OK	
0.8L1	66+54.33	412.95	412.86	412.41	2.208	0.770	412.59	0.27	OK	
0.9L1	66+61.06	413.15	413.06	412.66	1.319	0.510	412.77	0.29	OK	
CL Brg. Abut 2	66+67.79	413.33	413.24	412.91	0	0.000	412.91	0.33	OK	

Pavement thickness at CL brg = 0.333 ft

NEXT Beam depth = 28 in

FG Beam 4 Elev @ Abut 1 = 410.74

Bottom of beam 4 Elev at Abut 1= 408.08

FG Beam 4 Elev @ Abut 2 = 413.24

Bottom of beam 4 Elev at Abut 2= 410.57

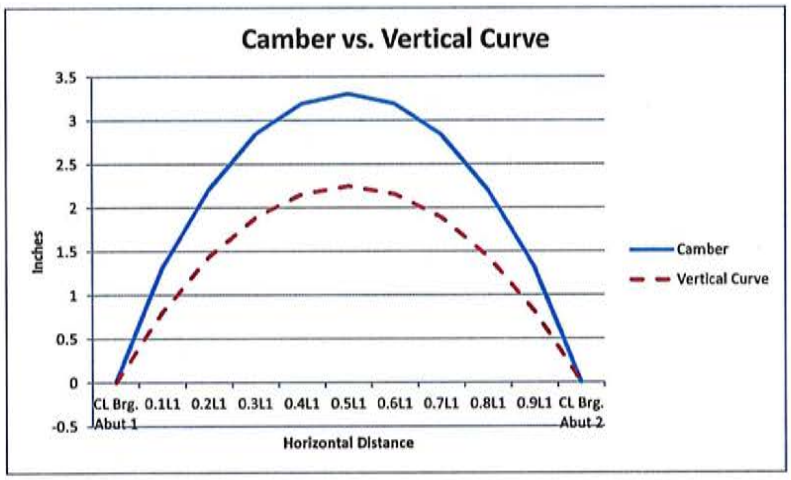

VHB

Computations

Project:	Br 93	Proj #	57632.00
Location:	Castleton, VT	Sheet	
Calculated by:	EAF	Date:	1/23/14
Checked by:	WPR	Date:	7/17/2014
Title:	Vertical Curve Ordinate		

Station Data — **English Units**

Input in shaded cells

Elevation = $(^{g_2}/_{2})*x^2 + g_1*x + c$

EL = FG Elevation + Δ EL

*Δ EL = Offset*Cross Slope =* (4.5"+8.1875'/2) * -2.0% = -0.089 ft

Deck =precast with beam = ft

Finished Grade Elevations

	Station	*FG EL*	*Δ*	*EL*	Level Line	*VC*
Interior Girder 3		PGL	(ft)			
CL Brg. Abut 1	66+03.39	410.97	-0.09	410.88	410.88	0.000
0.1L1	66+10.12	411.28	-0.09	411.19	411.12	0.809
0.2L1	66+16.85	411.58	-0.09	411.49	411.37	1.438
0.3L1	66+23.58	411.86	-0.09	411.77	411.61	1.888
0.4L1	66+30.31	412.12	-0.09	412.03	411.85	2.158
0.5L1	66+37.04	412.37	-0.09	412.29	412.10	2.247
0.6L1	66+43.77	412.61	-0.09	412.52	412.34	2.158
0.7L1	66+50.50	412.83	-0.09	412.74	412.58	1.888
0.8L1	66+57.23	413.04	-0.09	412.95	412.83	1.438
0.9L1	66+63.96	413.23	-0.09	413.14	413.07	0.809
CL Brg. Abut 2	66+70.69	413.40	-0.09	413.32	413.32	0.000

Value = 2.43 ft

ELEVATIONS:

	Station	FG EL	Profile EL @ CL Beam	Top of beam Straight Line EL	Camber (in) (at erection, Serv 1)	Camber Vert. Curve (in)	Conspan Top of Beam Elev.	From Top of Beam to profile EL	Verify Pavement depth >= 0.25'	
Interior Girder 3		PGL								
CL Brg. Abut 1	66+03.39	410.97	410.88	410.55	0	0.000	410.55	0.33	OK	
0.1L1	66+10.12	411.28	411.19	410.79	1.319	0.510	410.90	0.29	OK	
0.2L1	66+16.85	411.58	411.49	411.03	2.208	0.770	411.22	0.27	OK	
0.3L1	66+23.58	411.86	411.77	411.28	2.839	0.951	411.51	0.25	OK	
0.4L1	66+30.31	412.12	412.03	411.52	3.192	1.034	411.79	0.25	NG	
0.5L1	66+37.04	412.37	412.29	411.76	3.305	1.058	412.04	0.25	NG	Say ok, off by .0051 or 0.06"
0.6L1	66+43.77	412.61	412.52	412.01	3.192	1.034	412.27	0.25	NG	
0.7L1	66+50.50	412.83	412.74	412.25	2.839	0.951	412.49	0.25	OK	
0.8L1	66+57.23	413.04	412.95	412.49	2.208	0.770	412.68	0.27	OK	
0.9L1	66+63.96	413.23	413.14	412.74	1.319	0.510	412.85	0.29	OK	
CL Brg. Abut 2	66+70.69	413.40	413.32	412.98	0	0.000	412.98	0.33	OK	

Pavement thickness at CL brg = 0.333 ft

NEXT Beam depth = 28 in

FG Beam 4 Elev @ Abut 1 = 410.88

Bottom of beam 4 Elev at Abut 1= **408.21**

FG Beam 4 Elev @ Abut 2 = 413.32

Bottom of beam 4 Elev at Abut 2= **410.65**

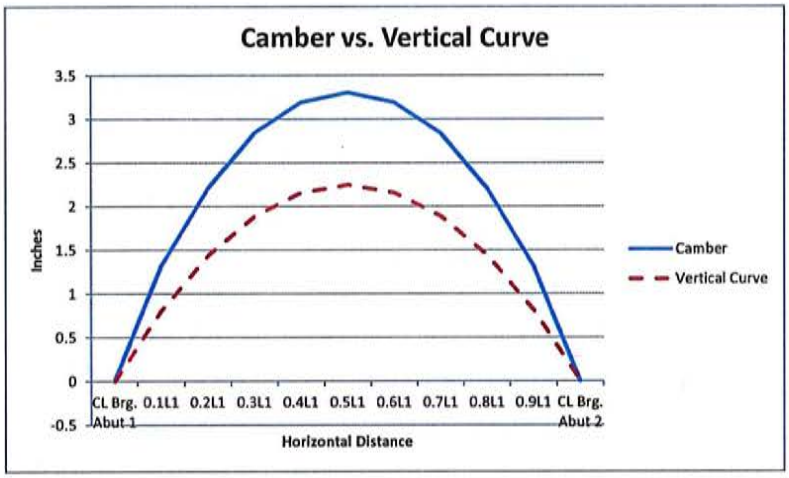

VHB

Computations

Project:	Br 93	Proj #	57632.00
Location:	Castleton, VT	Sheet	
Calculated by:	EAF	Date:	6/10/14
Checked by:	WPR	Date:	7/17/2014
Title:	Vertical Curve Ordinate		

Station Data — **English Units**

Input in shaded cells

Elevation = $(^1/_2)*x^2 + g_1*x + e$

EL = FG Elevation + Δ EL

*Δ EL = Offset*Cross Slope =* -0.310 ft = (4.5"+8.1875'+9"+(8.1875'-2 Curb)) * -2.0% * AT FACE OF CURB

Deck =precast with beam = ft

Finished Grade Elevations

	Station	*FG EL*	*Δ*	*EL*	Level Line	*VC*
Exterior Girder 4		PGL	(ft)			
CL Brg. Abut 1	66+06.98	411.14	-0.31	410.83	410.83	0.000
0.1L1	66+13.71	411.44	-0.31	411.13	411.06	0.809
0.2L1	66+20.44	411.73	-0.31	411.42	411.30	1.438
0.3L1	66+27.17	412.00	-0.31	411.69	411.53	1.888
0.4L1	66+33.90	412.26	-0.31	411.95	411.77	2.158
0.5L1	66+40.63	412.50	-0.31	412.19	412.01	2.247
0.6L1	66+47.36	412.73	-0.31	412.42	412.24	2.158
0.7L1	66+54.09	412.94	-0.31	412.63	412.48	1.888
0.8L1	66+60.82	413.14	-0.31	412.83	412.71	1.438
0.9L1	66+67.55	413.32	-0.31	413.01	412.95	0.809
CL Brg. Abut 2	66+74.28	413.49	-0.31	413.18	413.18	0.000

Value = 2.35 ft

ELEVATIONS:

	Station	FG EL	Profile EL @ CL Beam	Top of beam Straight Line EL	Camber (in) (at erection, Serv 1)	Camber Vert. Curve (in)	Conspan Top of Beam Elev.	Adjust curb for abutment slopes	From Top of Beam to profile EL	Verify Pavement depth >= 0.25'	Curb Height (ft)	Verify Curb Height >= 7"	
Exterior Girder 4		PGL											
CL Brg. Abut 1	66+06.98	411.14	410.83	410.49	0	0.000	410.49	-0.042	0.38	OK	0.958	OK	11 4/8
0.1L1	66+13.71	411.44	411.13	410.73	1.258	0.449	410.83	-0.033	0.33	OK	0.913	OK	11
0.2L1	66+20.44	411.73	411.42	410.97	2.087	0.649	411.14	-0.025	0.30	OK	0.888	OK	10 5/8
0.3L1	66+27.17	412.00	411.69	411.20	2.671	0.783	411.42	-0.017	0.28	OK	0.868	OK	10 3/8
0.4L1	66+33.90	412.26	411.95	411.44	2.994	0.836	411.69	-0.008	0.27	OK	0.855	OK	10 2/8
0.5L1	66+40.63	412.50	412.19	411.67	3.097	0.850	411.93	0.000	0.26	OK	0.846	OK	10 1/8
0.6L1	66+47.36	412.73	412.42	411.91	2.994	0.836	412.16	0.008	0.26	OK	0.839	OK	10 1/8
0.7L1	66+54.09	412.94	412.63	412.14	2.671	0.783	412.37	0.017	0.25	OK	0.835	OK	10
0.8L1	66+60.82	413.14	412.83	412.38	2.087	0.649	412.55	0.025	0.25	OK	0.838	OK	10
0.9L1	66+67.55	413.32	413.01	412.61	1.258	0.449	412.72	0.033	0.26	OK	0.846	OK	10 1/8
CL Brg. Abut 2	66+74.28	413.49	413.18	412.85	0	0.000	412.85	0.042	0.29	OK	0.875	OK	10 4/8

Pavement thickness at CL brg = 0.333 ft

NEXT Beam depth = 28 in

FG Beam 4 Elev @ Abut 1 = 410.83

Bottom of beam 4 Elev at Abut 1= **408.16** (not including 0.75" camber tolerance)

FG Beam 4 Elev @ Abut 2 = 413.18

Bottom of beam 4 Elev at Abut 2= **410.52** (not including 0.75" camber tolerance)

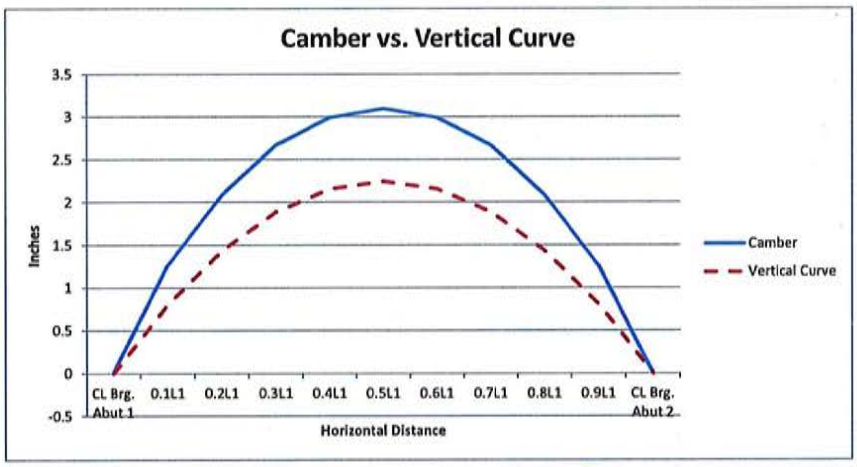

VHB

Computations

Project:	Br 93	Proj #	57632
Location:	Castleton, VT	Sheet	
Calculated by:	EAF	Date:	1/23/14
Checked by:	WPR	Date:	7/17/2014
Title:	Camber and Curb Height Check		

Station Data **English Units**

Elevation = $(^{r}/_{2})*x^2 + g_1*x + c$

Input in shaded cells

* Verify max longitudinal joint elevation difference, per PCI < 0.5"

Description	*Beam 1*	*Beam 2*	*Δ Camber*	*Check if < 0.5"*	Top of Curb EL @ Face of Curb *Beam 1*	*Beam 4*
CL Roadway						
CL Brg. Abut 1	0.000	0.000	0.00	OK	410.89	411.45
0.1L1	1.258	1.319	0.06	OK	411.22	411.75
0.2L1	2.087	2.208	0.12	OK	411.54	412.03
0.3L1	2.671	2.839	0.17	OK	411.84	412.29
0.4L1	2.994	3.192	0.20	OK	412.13	412.54
0.5L1	3.097	3.305	0.21	OK	412.41	412.78
0.6L1	2.994	3.192	0.20	OK	412.66	413.00
0.7L1	2.671	2.839	0.17	OK	412.91	413.20
0.8L1	2.087	2.208	0.12	OK	413.14	413.39
0.9L1	1.258	1.319	0.06	OK	413.35	413.56
CL Brg. Abut 2	0.000	0.000	0.00	OK	413.55	413.72

Section 6.0
Load Rating

Transportation
Land Development
Environmental
Services

Vanasse Hangen Brustlin, Inc.

Computations

Project	Bridge 93	Project #	57632.00
Location	Castleton, VT	Sheet	
Calculated by	EAF	Date	8/18/14
Checked by		Date	
Title	Load Rating		

Summary of Load Cases:

LRFR LOAD RATING FACTORS							
	TRUCK						
LOADING LEVELS	H20	HL-93	3S2	6 AXLE	3 A. STR.	4. A. STR.	5. A. SEMI
TONNAGE	20	36	36.0	66.0	30.0	34.5	38
INVENTORY	2.03	1.10					
POSTING							
OPERATING	2.85	1.46	2.77	1.85	2.39	2.14	2.35
COMMENTS:	The exterior beam controls the rating.						

Exterior Beam Rating

Load Rating of Prestressed Concrete Girder Bridges
(Manual for Bridge Evaluation, 2nd Edition, with 2011 Interim)

Span:1, Beam:1
Rating Summary

Design Live Load Inventory

Load Type	Weight (tons)	Controlling Location	RF	Type	Based on	RT (tons)
H20	20.00	0.5L : 33.7	2.03	Positive	PSStT	41
HL93 Design Load	-	0.5L : 33.7	1.10	Positive	CTens-B	-

Design Live Load Operating

Load Type	Weight (tons)	Controlling Location	RF	Type	Based on	RT (tons)
H20	20.00	0.5L : 33.7	2.85	Positive	Moment	57
HL93 Design Load	-	0.5L : 33.7	1.46	Positive	Moment	-

Legal Live Load

LRFR Article 6A.4.3.1 specifies that Legal Load Rating is not required when Inventory Design Load Rating Factor > 1.

Rating Factors	References	Values
Condition Factor	Table 6A.4.2.3-1	1.00
System Factor for Flexural Effect	Table 6A.4.2.4-1	1.00
System Factor for Shear Effect	Art. 6A.4.2.4	1.00
ADTT	Section C3.6.1.1.2	5000
Dynamic Load Factor for Design Level	Art. 6A.4.3.3	0.33
Dynamic Load Factor for Legal and Permit Level	Table C6A.4.4.3-1	0.33

For Flexural Effect: Condition Factor * System Factor = 1.00 >= 0.85 (Art. 6A.4.2.1) OK
For Shear Effect: Condition Factor * System Factor = 1.00 >= 0.85 (Art. 6A.4.2.1 and 6A.4.2.4) OK

Dead Load Factors (Table 6A.4.2.2-1)

Limit State	DC	DW
Strength I	1.25	1.50
Strength II	1.25	1.50
Service I	1.00	1.00
Service III	1.00	1.00

Design Live Load Factors (Table 6A.4.3.2.2-1)

Limit State	Inventory	Operating
Strength I	1.75	1.35
Service I	-	-
Service III	0.80	-

Legal Live Load Factors (Table 6A.4.4.2.3a-1)

Limit State	Values
Strength I	1.30
Service I	-
Service III	1.00

Allowable Stresses (ksi)

Rating Level	Concrete Compression	Concrete Tension	Steel
Design Inventory	0.60 x f'c = 6.00	0.19 x sqrt(f'c) = 0.60	0.90 x f'y = 218.70
Design Operating	0.60 x f'c = 6.00	0.19 x sqrt(f'c) = 0.60	0.90 x f'y = 218.70
Legal	0.60 x f'c = 6.00	0.19 x sqrt(f'c) = 0.60	-
Permit	0.60 x f'c = 6.00	0.19 x sqrt(f'c) = 0.60	0.90 x f'y = 218.70

Consider shear reinf. across plane (FDOT alternative): No

A) Design Live Load Rating

Inventory Rating Level

Shear and Moment RF's are for Strength I Limit State
Tension Stress RF's are for Service III Limit State
Prestress tendon RF is for Service I Limit State

H20 Positive Live Load

Location	Moment	K	Mom-K	Shear	CTens-T	CTens-B	PSStT
Bearing : 0.0	N.A.	N.A.	N.A.	2.57	N.A.	N.A.	N.A.
Transfer : 2.5	10.27	1.00	10.27	9.86	-	18.21	4.59
Critical : 1.7	-	-	-	9.87	-	-	-
0.1L : 6.3	5.40	1.00	5.40	5.56	-	7.84	4.15
0.2L : 13.1	4.23	1.00	4.23	6.39	-	4.66	4.11
0.3L : 20.0	2.97	1.00	2.97	7.40	-	2.96	2.60
0.4L : 26.8	2.33	1.00	2.33	8.96	-	2.30	2.14
0.5L : 33.7	2.20	1.00	2.20	11.39	-	2.14	2.03
0.6L : 40.5	2.33	1.00	2.33	8.96	-	2.30	2.14
0.7L : 47.3	2.97	1.00	2.97	7.40	-	2.96	2.60
0.8L : 54.2	4.23	1.00	4.23	6.39	-	4.66	4.11
0.9L : 61.0	5.40	1.00	5.40	5.56	-	7.84	4.15
Critical : 65.6	-	-	-	9.87	-	-	-
Transfer : 64.8	10.27	1.00	10.27	9.86	-	18.21	4.59
Bearing : 67.3	N.A.	N.A.	N.A.	2.57	N.A.	N.A.	N.A.

HL93 Design Load Positive Live Load

Location	Moment	K	Mom-K	Shear	CTens-T	CTens-B	PSStT
Bearing : 0.0	N.A.	N.A.	N.A.	1.26	N.A.	N.A.	N.A.
Transfer : 2.5	5.05	1.00	5.05	4.79	-	8.95	3.94
Critical : 1.7	-	-	-	4.79	-	-	-
0.1L : 6.3	2.67	1.00	2.67	2.67	-	3.87	3.07
0.2L : 13.1	2.11	1.00	2.11	3.13	-	2.33	2.52
0.3L : 20.0	1.51	1.00	1.51	2.70	-	1.51	1.72
0.4L : 26.8	1.19	1.00	1.19	3.01	-	1.17	1.45
0.5L : 33.7	1.13	1.00	1.13	4.36	-	1.10	1.39
0.6L : 40.5	1.19	1.00	1.19	3.01	-	1.17	1.45
0.7L : 47.3	1.51	1.00	1.51	2.70	-	1.51	1.72
0.8L : 54.2	2.11	1.00	2.11	3.13	-	2.33	2.52
0.9L : 61.0	2.67	1.00	2.67	2.67	-	3.87	3.07
Critical : 65.6	-	-	-	4.79	-	-	-
Transfer : 64.8	5.05	1.00	5.05	4.79	-	8.95	3.94
Bearing : 67.3	N.A.	N.A.	N.A.	1.26	N.A.	N.A.	N.A.

Operating Rating Level

Shear and Moment RF's are for Strength I Limit State

H20 Positive Live Load

Location	Moment	K	Mom-K	Shear
Bearing : 0.0	N.A.	N.A.	N.A.	3.33
Transfer : 2.5	13.32	1.00	13.32	12.83
Critical : 1.7	-	-	-	12.84
0.1L : 6.3	7.00	1.00	7.00	7.30
0.2L : 13.1	5.48	1.00	5.48	8.44
0.3L : 20.0	3.85	1.00	3.85	9.79
0.4L : 26.8	3.02	1.00	3.02	11.86
0.5L : 33.7	2.85	1.00	2.85	15.07
0.6L : 40.5	3.02	1.00	3.02	11.86
0.7L : 47.3	3.85	1.00	3.85	9.79
0.8L : 54.2	5.48	1.00	5.48	8.44
0.9L : 61.0	7.00	1.00	7.00	7.30
Critical : 65.6	-	-	-	12.84
Transfer : 64.8	13.32	1.00	13.32	12.83
Bearing : 67.3	N.A.	N.A.	N.A.	3.33

HL93 Design Load Positive Live Load

Location	Moment	K	Mom-K	Shear
Bearing : 0.0	N.A.	N.A.	N.A.	1.63
Transfer : 2.5	6.54	1.00	6.54	6.26
Critical : 1.7	-	-	-	6.26
0.1L : 6.3	3.46	1.00	3.46	3.54
0.2L : 13.1	2.74	1.00	2.74	4.19
0.3L : 20.0	1.96	1.00	1.96	5.05
0.4L : 26.8	1.54	1.00	1.54	5.40
0.5L : 33.7	1.46	1.00	1.46	7.68
0.6L : 40.5	1.54	1.00	1.54	5.40
0.7L : 47.3	1.96	1.00	1.96	5.05
0.8L : 54.2	2.74	1.00	2.74	4.19
0.9L : 61.0	3.46	1.00	3.46	3.54
Critical : 65.6	-	-	-	6.26
Transfer : 64.8	6.54	1.00	6.54	6.26
Bearing : 67.3	N.A.	N.A.	N.A.	1.63

B) Legal Live Load Rating

Shear and Moment RF's are for Strength I Limit State
Tension Stress RF's are for Service III Limit State

3 Axle Straight Positive Live Load

Location	Moment	K	Mom-K	Shear	CTens-T	CTens-B
Bearing : 0.0	N.A.	N.A.	N.A.	2.40	N.A.	N.A.
Transfer : 2.5	9.63	1.00	9.63	9.22	-	10.14
Critical : 1.7	-	-	-	9.23	-	-
0.1L : 6.3	5.07	1.00	5.07	5.21	-	4.38
0.2L : 13.1	4.00	1.00	4.00	6.02	-	2.62
0.3L : 20.0	2.83	1.00	2.83	7.03	-	1.68
0.4L : 26.8	2.24	1.00	2.24	8.61	-	1.32
0.5L : 33.7	2.10	1.00	2.10	11.15	-	1.21
0.6L : 40.5	2.24	1.00	2.24	8.61	-	1.32
0.7L : 47.3	2.83	1.00	2.83	7.03	-	1.68
0.8L : 54.2	4.00	1.00	4.00	6.02	-	2.62
0.9L : 61.0	5.07	1.00	5.07	5.21	-	4.38
Critical : 65.6	-	-	-	9.23	-	-
Transfer : 64.8	9.63	1.00	9.63	9.22	-	10.14
Bearing : 67.3	N.A.	N.A.	N.A.	2.40	N.A.	N.A.

3S2 Positive Live Load

Location	Moment	K	Mom-K	Shear	CTens-T	CTens-B
Bearing : 0.0	N.A.	N.A.	N.A.	2.50	N.A.	N.A.
Transfer : 2.5	10.16	1.00	10.16	9.75	-	10.71
Critical : 1.7	-	-	-	9.72	-	-
0.1L : 6.3	5.44	1.00	5.44	5.63	-	4.70
0.2L : 13.1	4.46	1.00	4.46	6.82	-	2.92
0.3L : 20.0	3.18	1.00	3.18	8.48	-	1.89
0.4L : 26.8	2.52	1.00	2.52	11.36	-	1.48
0.5L : 33.7	2.49	1.00	2.49	16.25	-	1.44
0.6L : 40.5	2.52	1.00	2.52	11.36	-	1.48
0.7L : 47.3	3.18	1.00	3.18	8.48	-	1.89
0.8L : 54.2	4.46	1.00	4.46	6.82	-	2.92
0.9L : 61.0	5.44	1.00	5.44	5.63	-	4.70
Critical : 65.6	-	-	-	9.72	-	-
Transfer : 64.8	10.16	1.00	10.16	9.75	-	10.71
Bearing : 67.3	N.A.	N.A.	N.A.	2.50	N.A.	N.A.

4 Axle Straight Positive Live Load

Location	Moment	K	Mom-K	Shear	CTens-T	CTens-B
Bearing : 0.0	N.A.	N.A.	N.A.	2.15	N.A.	N.A.
Transfer : 2.5	8.65	1.00	8.65	8.27	-	9.11
Critical : 1.7	-	-	-	8.27	-	-
0.1L : 6.3	4.57	1.00	4.57	4.66	-	3.94
0.2L : 13.1	3.62	1.00	3.62	5.40	-	2.37
0.3L : 20.0	2.55	1.00	2.55	6.35	-	1.51
0.4L : 26.8	1.98	1.00	1.98	7.86	-	1.17
0.5L : 33.7	1.88	1.00	1.88	10.33	-	1.09
0.6L : 40.5	1.98	1.00	1.98	7.86	-	1.17
0.7L : 47.3	2.55	1.00	2.55	6.35	-	1.51
0.8L : 54.2	3.62	1.00	3.62	5.40	-	2.37
0.9L : 61.0	4.57	1.00	4.57	4.66	-	3.94
Critical : 65.6	-	-	-	8.27	-	-
Transfer : 64.8	8.65	1.00	8.65	8.27	-	9.11
Bearing : 67.3	N.A.	N.A.	N.A.	2.15	N.A.	N.A.

5 Axle Semi Positive Live Load

Location	Moment	K	Mom-K	Shear	CTens-T	CTens-B
Bearing : 0.0	N.A.	N.A.	N.A.	2.22	N.A.	N.A.
Transfer : 2.5	8.99	1.00	8.99	8.57	-	9.47
Critical : 1.7	-	-	-	8.56	-	-
0.1L : 6.3	4.79	1.00	4.79	4.90	-	4.13
0.2L : 13.1	3.86	1.00	3.86	5.83	-	2.53
0.3L : 20.0	2.76	1.00	2.76	7.08	-	1.63
0.4L : 26.8	2.16	1.00	2.16	9.21	-	1.27
0.5L : 33.7	2.08	1.00	2.08	12.98	-	1.20
0.6L : 40.5	2.16	1.00	2.16	9.21	-	1.27
0.7L : 47.3	2.76	1.00	2.76	7.08	-	1.63
0.8L : 54.2	3.86	1.00	3.86	5.83	-	2.53
0.9L : 61.0	4.79	1.00	4.79	4.90	-	4.13
Critical : 65.6	-	-	-	8.56	-	-
Transfer : 64.8	8.99	1.00	8.99	8.57	-	9.47
Bearing : 67.3	N.A.	N.A.	N.A.	2.22	N.A.	N.A.

6 Axle Trailer Positive Live Load

Location	Moment	K	Mom-K	Shear	CTens-T	CTens-B
Bearing : 0.0	N.A.	N.A.	N.A.	1.48	N.A.	N.A.
Transfer : 2.5	6.12	1.00	6.12	5.74	-	6.45
Critical : 1.7	-	-	-	5.72	-	-
0.1L : 6.3	3.29	1.00	3.29	3.29	-	2.84
0.2L : 13.1	2.72	1.00	2.72	4.04	-	1.79
0.3L : 20.0	1.99	1.00	1.99	5.04	-	1.18
0.4L : 26.8	1.67	1.00	1.67	5.78	-	0.98*
0.5L : 33.7	1.64	1.00	1.64	7.40	-	0.95*
0.6L : 40.5	1.67	1.00	1.67	5.78	-	0.98*
0.7L : 47.3	1.99	1.00	1.99	5.04	-	1.18
0.8L : 54.2	2.72	1.00	2.72	4.04	-	1.79
0.9L : 61.0	3.29	1.00	3.29	3.29	-	2.84
Critical : 65.6	-	-	-	5.72	-	-
Transfer : 64.8	6.12	1.00	6.12	5.74	-	6.45
Bearing : 67.3	N.A.	N.A.	N.A.	1.48	N.A.	N.A.

Notation:
CComp-T/ CComp-B - Concrete Compression at Top/Bottom;
CTens-T/ CTens-B - Concrete Tension at Top/Bottom;
PSStT - Prestress Steel Tension.

Interior Beam Rating

Interior Beam Rating

Load Rating of Prestressed Concrete Girder Bridges
(Manual for Bridge Evaluation, 2nd Edition, with 2011 Interim)

Span:1, Beam:2
Rating Summary

Design Live Load Inventory

Load Type	Weight (tons)	Controlling Location	RF	Type	Based on	RT (tons)
H20	20.00	Bearing : 0.0	2.48	Positive	Shear	50
HL93 Design Load	-	Bearing : 0.0	1.21	Positive	Shear	-

Design Live Load Operating

Load Type	Weight (tons)	Controlling Location	RF	Type	Based on	RT (tons)
H20	20.00	Bearing : 0.0	3.21	Positive	Shear	64
HL93 Design Load	-	Bearing : 0.0	1.57	Positive	Shear	-

Legal Live Load

LRFR Article 6A.4.3.1 specifies that Legal Load Rating is not required when Inventory Design Load Rating Factor > 1.

Rating Factors	References	Values
Condition Factor	Table 6A.4.2.3-1	1.00
System Factor for Flexural Effect	Table 6A.4.2.4-1	1.00
System Factor for Shear Effect	Art. 6A.4.2.4	1.00
ADTT	Section C3.6.1.1.2	5000
Dynamic Load Factor for Design Level	Art. 6A.4.3.3	0.33
Dynamic Load Factor for Legal and Permit Level	Table C6A.4.4.3-1	0.33

For Flexural Effect: Condition Factor * System Factor = 1.00 >= 0.85 (Art. 6A.4.2.1) OK
For Shear Effect: Condition Factor * System Factor = 1.00 >= 0.85 (Art. 6A.4.2.1 and 6A.4.2.4) OK

Dead Load Factors (Table 6A.4.2.2-1)

Limit State	DC	DW
Strength I	1.25	1.50
Strength II	1.25	1.50
Service I	1.00	1.00
Service III	1.00	1.00

Design Live Load Factors (Table 6A.4.3.2.2-1)

Limit State	Inventory	Operating
Strength I	1.75	1.35
Service I	-	-
Service III	0.80	-

Legal Live Load Factors (Table 6A.4.4.2.3a-1)

Limit State	Values
Strength I	1.30
Service I	-
Service III	1.00

Allowable Stresses (ksi)

Rating Level	Concrete Compression	Concrete Tension	Steel
Design Inventory	0.60 x f'c = 6.00	0.19 x sqrt(f'c) = 0.60	0.90 x f'y = 218.70
Design Operating	0.60 x f'c = 6.00	0.19 x sqrt(f'c) = 0.60	0.90 x f'y = 218.70
Legal	0.60 x f'c = 6.00	0.19 x sqrt(f'c) = 0.60	-
Permit	0.60 x f'c = 6.00	0.19 x sqrt(f'c) = 0.60	0.90 x f'y = 218.70

Consider shear reinf. across plane (FDOT alternative): No

A) Design Live Load Rating

Inventory Rating Level

Shear and Moment RF's are for Strength I Limit State
Tension Stress RF's are for Service III Limit State
Prestress tendon RF is for Service I Limit State

H20 Positive Live Load

Location	Moment	K	Mom-K	Shear	CTens-T	CTens-B	PSStT
Bearing : 0.0	N.A.	N.A.	N.A.	2.48	N.A.	N.A.	N.A.
Transfer : 2.5	12.48	1.00	12.48	9.23	-	22.23	5.15
Critical : 1.7	-	-	-	9.21	-	-	-
0.1L : 6.3	6.70	1.00	6.70	5.29	-	9.68	4.95
0.2L : 13.1	5.41	1.00	5.41	6.11	-	5.84	5.42
0.3L : 20.0	3.89	1.00	3.89	7.07	-	3.79	3.27
0.4L : 26.8	3.09	1.00	3.09	8.52	-	2.99	2.65
0.5L : 33.7	2.93	1.00	2.93	10.78	-	2.79	2.51
0.6L : 40.5	3.09	1.00	3.09	8.52	-	2.99	2.65
0.7L : 47.3	3.89	1.00	3.89	7.07	-	3.79	3.27
0.8L : 54.2	5.41	1.00	5.41	6.11	-	5.84	5.42
0.9L : 61.0	6.70	1.00	6.70	5.29	-	9.68	4.95
Critical : 65.6	-	-	-	9.21	-	-	-
Transfer : 64.8	12.48	1.00	12.48	9.23	-	22.23	5.15
Bearing : 67.3	N.A.	N.A.	N.A.	2.48	N.A.	N.A.	N.A.

HL93 Design Load Positive Live Load

Location	Moment	K	Mom-K	Shear	CTens-T	CTens-B	PSStT
Bearing : 0.0	N.A.	N.A.	N.A.	1.21	N.A.	N.A.	N.A.
Transfer : 2.5	6.13	1.00	6.13	4.49	-	10.93	4.49
Critical : 1.7	-	-	-	4.47	-	-	-
0.1L : 6.3	3.31	1.00	3.31	2.56	-	4.78	3.70
0.2L : 13.1	2.71	1.00	2.71	3.02	-	2.92	3.26
0.3L : 20.0	1.97	1.00	1.97	3.63	-	1.92	2.17
0.4L : 26.8	1.57	1.00	1.57	4.09	-	1.52	1.81
0.5L : 33.7	1.50	1.00	1.50	5.87	-	1.43	1.73
0.6L : 40.5	1.57	1.00	1.57	4.09	-	1.52	1.81
0.7L : 47.3	1.97	1.00	1.97	3.63	-	1.92	2.17
0.8L : 54.2	2.71	1.00	2.71	3.02	-	2.92	3.26
0.9L : 61.0	3.31	1.00	3.31	2.56	-	4.78	3.70
Critical : 65.6	-	-	-	4.47	-	-	-
Transfer : 64.8	6.13	1.00	6.13	4.49	-	10.93	4.49
Bearing : 67.3	N.A.	N.A.	N.A.	1.21	N.A.	N.A.	N.A.

Operating Rating Level

Shear and Moment RF's are for Strength I Limit State

H20 Positive Live Load

Location	Moment	K	Mom-K	Shear
Bearing : 0.0	N.A.	N.A.	N.A.	3.21
Transfer : 2.5	16.17	1.00	16.17	12.01
Critical : 1.7	-	-	-	11.98
0.1L : 6.3	8.69	1.00	8.69	6.93
0.2L : 13.1	7.02	1.00	7.02	8.04
0.3L : 20.0	5.04	1.00	5.04	9.32
0.4L : 26.8	4.00	1.00	4.00	11.24
0.5L : 33.7	3.80	1.00	3.80	14.21
0.6L : 40.5	4.00	1.00	4.00	11.24
0.7L : 47.3	5.04	1.00	5.04	9.32
0.8L : 54.2	7.02	1.00	7.02	8.04
0.9L : 61.0	8.69	1.00	8.69	6.93
Critical : 65.6	-	-	-	11.98
Transfer : 64.8	16.17	1.00	16.17	12.01
Bearing : 67.3	N.A.	N.A.	N.A.	3.21

HL93 Design Load Positive Live Load

Location	Moment	K	Mom-K	Shear
Bearing : 0.0	N.A.	N.A.	N.A.	1.57
Transfer : 2.5	7.95	1.00	7.95	5.87
Critical : 1.7	-	-	-	5.83
0.1L : 6.3	4.29	1.00	4.29	3.38
0.2L : 13.1	3.51	1.00	3.51	4.02
0.3L : 20.0	2.56	1.00	2.56	4.84
0.4L : 26.8	2.04	1.00	2.04	6.16
0.5L : 33.7	1.95	1.00	1.95	8.36
0.6L : 40.5	2.04	1.00	2.04	6.16
0.7L : 47.3	2.56	1.00	2.56	4.84
0.8L : 54.2	3.51	1.00	3.51	4.02
0.9L : 61.0	4.29	1.00	4.29	3.38
Critical : 65.6	-	-	-	5.83
Transfer : 64.8	7.95	1.00	7.95	5.87
Bearing : 67.3	N.A.	N.A.	N.A.	1.57

B) Legal Live Load Rating

Shear and Moment RF's are for Strength I Limit State
Tension Stress RF's are for Service III Limit State

3 Axle Straight Positive Live Load

Location	Moment	K	Mom-K	Shear	CTens-T	CTens-B
Bearing : 0.0	N.A.	N.A.	N.A.	2.32	N.A.	N.A.
Transfer : 2.5	11.69	1.00	11.69	8.63	-	12.38
Critical : 1.7	-	-	-	8.61	-	-
0.1L : 6.3	6.30	1.00	6.30	4.96	-	5.41
0.2L : 13.1	5.12	1.00	5.12	5.76	-	3.28
0.3L : 20.0	3.70	1.00	3.70	6.71	-	2.15
0.4L : 26.8	2.97	1.00	2.97	8.19	-	1.71
0.5L : 33.7	2.79	1.00	2.79	10.55	-	1.58
0.6L : 40.5	2.97	1.00	2.97	8.19	-	1.71
0.7L : 47.3	3.70	1.00	3.70	6.71	-	2.15
0.8L : 54.2	5.12	1.00	5.12	5.76	-	3.28
0.9L : 61.0	6.30	1.00	6.30	4.96	-	5.41
Critical : 65.6	-	-	-	8.61	-	-
Transfer : 64.8	11.69	1.00	11.69	8.63	-	12.38
Bearing : 67.3	N.A.	N.A.	N.A.	2.32	N.A.	N.A.

3S2 Positive Live Load

Location	Moment	K	Mom-K	Shear	CTens-T	CTens-B
Bearing : 0.0	N.A.	N.A.	N.A.	2.42	N.A.	N.A.
Transfer : 2.5	12.34	1.00	12.34	9.13	-	13.07
Critical : 1.7	-	-	-	9.07	-	-
0.1L : 6.3	6.76	1.00	6.76	5.36	-	5.80
0.2L : 13.1	5.71	1.00	5.71	6.51	-	3.65
0.3L : 20.0	4.16	1.00	4.16	8.08	-	2.41
0.4L : 26.8	3.34	1.00	3.34	10.78	-	1.93
0.5L : 33.7	3.31	1.00	3.31	15.32	-	1.88
0.6L : 40.5	3.34	1.00	3.34	10.78	-	1.93
0.7L : 47.3	4.16	1.00	4.16	8.08	-	2.41
0.8L : 54.2	5.71	1.00	5.71	6.51	-	3.65
0.9L : 61.0	6.76	1.00	6.76	5.36	-	5.80
Critical : 65.6	-	-	-	9.07	-	-
Transfer : 64.8	12.34	1.00	12.34	9.13	-	13.07
Bearing : 67.3	N.A.	N.A.	N.A.	2.42	N.A.	N.A.

4 Axle Straight Positive Live Load

Location	Moment	K	Mom-K	Shear	CTens-T	CTens-B
Bearing : 0.0	N.A.	N.A.	N.A.	2.08	N.A.	N.A.
Transfer : 2.5	10.50	1.00	10.50	7.74	-	11.13
Critical : 1.7	-	-	-	7.71	-	-
0.1L : 6.3	5.67	1.00	5.67	4.45	-	4.87
0.2L : 13.1	4.63	1.00	4.63	5.17	-	2.97
0.3L : 20.0	3.33	1.00	3.33	6.07	-	1.93
0.4L : 26.8	2.63	1.00	2.63	7.49	-	1.52
0.5L : 33.7	2.51	1.00	2.51	9.78	-	1.42
0.6L : 40.5	2.63	1.00	2.63	7.49	-	1.52
0.7L : 47.3	3.33	1.00	3.33	6.07	-	1.93
0.8L : 54.2	4.63	1.00	4.63	5.17	-	2.97
0.9L : 61.0	5.67	1.00	5.67	4.45	-	4.87
Critical : 65.6	-	-	-	7.71	-	-
Transfer : 64.8	10.50	1.00	10.50	7.74	-	11.13
Bearing : 67.3	N.A.	N.A.	N.A.	2.08	N.A.	N.A.

5 Axle Semi Positive Live Load

Location	Moment	K	Mom-K	Shear	CTens-T	CTens-B
Bearing : 0.0	N.A.	N.A.	N.A.	2.14	N.A.	N.A.
Transfer : 2.5	10.92	1.00	10.92	8.03	-	11.56
Critical : 1.7	-	-	-	7.99	-	-
0.1L : 6.3	5.95	1.00	5.95	4.67	-	5.10
0.2L : 13.1	4.95	1.00	4.95	5.57	-	3.17
0.3L : 20.0	3.61	1.00	3.61	6.77	-	2.09
0.4L : 26.8	2.86	1.00	2.86	8.76	-	1.65
0.5L : 33.7	2.77	1.00	2.77	12.26	-	1.57
0.6L : 40.5	2.86	1.00	2.86	8.76	-	1.65
0.7L : 47.3	3.61	1.00	3.61	6.77	-	2.09
0.8L : 54.2	4.95	1.00	4.95	5.57	-	3.17
0.9L : 61.0	5.95	1.00	5.95	4.67	-	5.10
Critical : 65.6	-	-	-	7.99	-	-
Transfer : 64.8	10.92	1.00	10.92	8.03	-	11.56
Bearing : 67.3	N.A.	N.A.	N.A.	2.14	N.A.	N.A.

6 Axle Trailer Positive Live Load

Location	Moment	K	Mom-K	Shear	CTens-T	CTens-B
Bearing : 0.0	N.A.	N.A.	N.A.	1.43	N.A.	N.A.
Transfer : 2.5	7.43	1.00	7.43	5.38	-	7.87
Critical : 1.7	-	-	-	5.33	-	-
0.1L : 6.3	4.09	1.00	4.09	3.15	-	3.51
0.2L : 13.1	3.49	1.00	3.49	3.88	-	2.23
0.3L : 20.0	2.61	1.00	2.61	4.84	-	1.51
0.4L : 26.8	2.21	1.00	2.21	6.35	-	1.27
0.5L : 33.7	2.18	1.00	2.18	8.22	-	1.24
0.6L : 40.5	2.21	1.00	2.21	6.35	-	1.27
0.7L : 47.3	2.61	1.00	2.61	4.84	-	1.51
0.8L : 54.2	3.49	1.00	3.49	3.88	-	2.23
0.9L : 61.0	4.09	1.00	4.09	3.15	-	3.51
Critical : 65.6	-	-	-	5.33	-	-
Transfer : 64.8	7.43	1.00	7.43	5.38	-	7.87
Bearing : 67.3	N.A.	N.A.	N.A.	1.43	N.A.	N.A.

Notation:
CComp-T/ CComp-B - Concrete Compression at Top/Bottom;
CTens-T/ CTens-B - Concrete Tension at Top/Bottom;
PSStT - Prestress Steel Tension.

Transportation
Land Development
Environmental
Services

Computations

Vanasse Hangen Brustlin, Inc.

Project	Bridge #93	Project #	57632
Location	Castleton, VT	Sheet	
Calculated by	EAF	Date	8/18/14
Checked by		Date	
Title	Load Rating		

Maximim live load moments and shears were found using Quickbridge excel spreadsheets which can be found in the following lo
\\vtdata\projects\57632.00\tech\Bridge\Superstructure\NEXT Beam\Load Rating

Span = 66.77'

Maximum Live Load Forces			
Load Case/Truck:		**Shear V_Z (kip)**	**Moment M_Y (ft-kip)**
Config.	**Number of axles**		
3S2 Truck	5	52.7	752.2
6 Axle Trailer	6	87.4	1127.1
3 Axle Straight	3	55.1	871.5
4 Axle Straight	4	61.4	972.5
5 Axle Semi	5	59.5	886.9

Impact and Distribution Factor not included

Transportation
Land Development
Environmental
Services

Computations

VHB Vanasse Hangen Brustlin, Inc.

Project	Bridge 93	Project #	57632.00
Location	Castleton, VT	Sheet	
Calculated by	EAF	Date	8/18/14
Checked by		Date	
Title	Load Rating		

HL-93 TEST - Exterior Beam Controls

HL-93 Moment =	1296.9	(From Conspan Shear/Moment Envelope
HL-93 Shear =	27.1	(&Reactions), LL+I @ Midspan & bearing)

Impact Factor = 1.00
Multiple Presence Factor = 1.0

Impact Factor = 0.65 Positive Moment
0.96 Positive Shear

(* USED MAXIMUM INTERIOR BEAM VALUES)

	Dead Load DC		Dead Load DW		Dist. Live Load + Impact	Nominal Capacity
Moment, kip-ft	919.9 (Self WT + DL Prec)	14.2 DL - Comp DC(Max)		260.6 DL-Comp DW(Max)	1297	3903 ULTIMATE MOMENT Mr-prvd @ 0.5L

General Load-Rating Equation:

MBE Eq. 6A.4.2.1-1

$$RF = \frac{C - (\gamma_{DC})(DC) - (\gamma_{DW})(DW) \pm (\gamma_p)(P)}{(\gamma_{LL})(LL + IM)}$$

φ_c =	1.00	Condition Factor, MBE 6A.4.2.3
φ_s =	1.00	System Factor, MBE 6A.4.2.4
φ_f =	1.0	LRFD Resistance Factor for flexure, LRFD 6.5.4.2
φ_s =	0.9	LRFD Resistance Factor for shear, LRFD 6.5.4.2

Strength I Limit State

$C = \varphi_c\ \varphi_s\ \varphi R_n$ for Strength Limit States

$$RF = \frac{C - (\gamma_{DC})(DC) - (\gamma_{DC})(DW)}{(\gamma_{LL})(LL + IM)}$$

*γ_{DC} =	1.25	
*γ_{DW} =	1.5	
*γ_{LL} =	1.35	OPERATING
*γ_{LL} =	1.75	INVENTORY

* Ref. MBE Table 6A.4.2.2-1

OPERATING

HL-93 TEST Strength I	
$RF_{Flexure}$ =	1.32

INVENTORY

HL-93 TEST Strength I	
$RF_{Flexure}$ =	1.03

Service III Limit State

$C = f_R$ For Service Limit States

$$RF = \frac{f_R - (\gamma_{DC})(f_{DC}) - (\gamma_{DW})(f_{DW})}{(\gamma_{LL})(f_{LL+IM})}$$

$$f_{DC} = \frac{M_{DC}}{S_{bot}}$$

$$f_{DW} = \frac{M_{DW}}{S_{bot}}$$

$$f_{LL+IM} = \frac{M_{LL}}{S_{bot}}$$

f_R =	4.68	ksi	flexural resistance
f_b =	4.18	ksi	compressive stress due to effective prestress
S_{bot} =	4798.5	in^3	

$f_R = f_b + Allowable_tenisle_stress$

$$f_b = \frac{P_{pe}}{A} + \frac{P_{pe} * e}{S_b}$$

$f_{DC\text{-}NC}$ =	2.3	ksi	
$f_{DC\text{-}c}$ =	0.04	ksi	
f_{DW} =	0.65	ksi	
f_{LL+IM} =	3.2	ksi	
*γ_{DC} =	1.00		
*γ_{LL} =	0.80		
*γ_{DW} =	1.00		

P_{pe} = 1468.04 kips $\quad P_{pe} = A_{ps} * f_{pe}$

A_{ps} = 8.246 in^2

f_{pe} = 178.03 ksi

$f_{pe} = Initial_Prestress - Total_Prestress_Losses$

* Ref. MBE Table 6A.4.2.2-1 $\quad \Delta f_{plt}$ = 24.47 ksi from Conspan (Time Depended Losses)

HL-93 TEST Service III	
$RF_{Flexure}$ =	0.65

Transportation
Land Development
Environmental
Services

Computations

Vanasse Hangen Brustlin, Inc.

Project	Bridge 93	Project #	57632.00
Location	Castleton, VT	Sheet	
Calculated by	EAF	Date	8/18/14
Checked by		Date	
Title	Load Rating		

H20 Truck

H20 Moment = 617.0
H20 Shear =

(* USED MAXIMUM INTERIOR BEAM VALUES)

Impact Factor = 1.33
Multiple Presence Factor = 1.0
Impact Factor = 0.65 Positive Moment
0.96 Positive Shear

	Dead Load DC		Dead Load DW		Dist. Live Load + Impact	Nominal Capacity
Moment, kip-ft	919.9	14.2	0.0	260.6	533	3903

General Load-Rating Equation:

MBE Eq. 6A.4.2.1-1

$$RF = \frac{C - (\gamma_{DC})(DC) - (\gamma_{DW})(DW) \pm (\gamma_p)(P)}{(\gamma_{LL})(LL + IM)}$$

φ_c = 1.00 Condition Factor, MBE 6A.4.2.3
φ_s = 1.00 System Factor, MBE 6A.4.2.4
φ_f = 1.0 LRFD Resistance Factor for flexure, LRFD 6.5.4.2
φ_s = 0.9 LRFD Resistance Factor for shear, LRFD 6.5.4.2

Strength I Limit State

$C = \varphi_c\, \varphi_s\, \varphi R_n$ for Strength Limit States

$$RF = \frac{C - (\gamma_{DC})(DC) - (\gamma_{DC})(DW)}{(\gamma_{LL})(LL + IM)}$$

*γ_{DC} = 1.25
*γ_{DW} = 1.5
*γ_{LL} = 1.35 OPERATING
*γ_{LL} = 1.75 INVENTORY
* Ref. MBE Table 6A.4.2.2-1

OPERATING	INVENTORY
H20 Truck Strength I	**H20 Truck Strength I**
$RF_{Flexure}$ = 3.26	**$RF_{Flexure}$ = 2.51**

Service III Limit State

$$RF = \frac{f_R - (\gamma_{DC})(f_{DC}) - (\gamma_{DW})(f_{DW})}{(\gamma_{LL})(f_{LL+IM})}$$

$C = f_R$ For Service Limit States

f_R = 4.68 ksi flexural resistance $\boxed{f_R = f_b + Allowable_tenisle_stress}$
f_b = 4.18 ksi compressive stress due to effective prestress
S_{bot} = 4798.5 in^3

$$\boxed{f_b = \frac{P_{pe}}{A} + \frac{P_{pe} * e}{S_b}}$$

$$\boxed{f_{DC} = \frac{M_{DC}}{S_{bot}}}$$

$$\boxed{f_{DW} = \frac{M_{DW}}{S_{bot}}}$$

$$\boxed{f_{LL+IM} = \frac{M_{LL}}{S_{bot}}}$$

$f_{DC\text{-}NC}$ = 2.3 ksi
$f_{DC\text{-}c}$ = 0.04 ksi
f_{DW} = 0.65 ksi
f_{LL+IM} = 1.3 ksi
*γ_{DC} = 1.00
*γ_{LL} = 0.80
*γ_{DW} = 1.00
* Ref. MBE Table 6A.4.2.2-1

P_{pe} = 1468.04 kips $\boxed{P_{pe} = A_{ps} * f_{pe}}$
A_{ps} = 8.246 in^2

f_{pe} = 178.03 ksi

$\boxed{f_{pe} = Initital_Prestress - Total_Prestress_Losses}$

Δf_{plt} = 24.47 ksi from Conspan

H20 Truck Service III
$RF_{Flexure}$ = 1.59

Transportation
Land Development
Environmental
Services

Computations

VHB *Vanasse Hangen Brustlin, Inc.*

Project	Bridge 93	Project #	57632.00
Location	Castleton, VT	Sheet	
Calculated by	EAF	Date	8/18/14
Checked by		Date	
Title	Load Rating		

3S2 Truck

3S2 Moment = 752.2
3S2 Shear = 52.7

Impact Factor = 1.33
Multiple Presence Factor = 1.0

Impact Factor = 0.65 Positive Moment
0.96 Positive Shear

(* USED MAXIMUM EXTERIOR BEAM VALUES)
(T 1.2.5.1 + 1.2.5.2 for moment values, T 1.2.6.1 + 1.2.6.2 for shear values)

	Dead Load DC		Dead Load DW		Dist. Live Load + Impact	Nominal Capacity
Moment, kip-ft	919.9	14.2	0.0	260.6	650	3903

General Load-Rating Equation:

MBE Eq. 6A.4.2.1-1

$$RF = \frac{C - (\gamma_{DC})(DC) - (\gamma_{DW})(DW) \pm (\gamma_p)(P)}{(\gamma_{LL})(LL + IM)}$$

φ_c =	1.00	Condition Factor, MBE 6A.4.2.3
φ_s =	1.00	System Factor, MBE 6A.4.2.4
φ_f =	1.0	LRFD Resistance Factor for flexure, LRFD 6.5.4.2
φ_s =	0.9	LRFD Resistance Factor for shear, LRFD 6.5.4.2

Strength I Limit State

$C = \varphi_c\, \varphi_s\, \varphi R_n$ for Strength Limit States

$$RF = \frac{C - (\gamma_{DC})(DC) - (\gamma_{DC})(DW)}{(\gamma_{LL})(LL + IM)}$$

$^*\gamma_{DC}$ =	1.25
$^*\gamma_{DW}$ =	1.5
$^*\gamma_{LL}$ =	1.30

* Ref. MBE Table 6A.4.2.2-1

3S2 Truck Strength I	
$RF_{Flexure}$ =	2.77

Service III Limit State

$$RF = \frac{f_R - (\gamma_{DC})(f_{DC}) - (\gamma_{DW})(f_{DW})}{(\gamma_{LL})(f_{LL+IM})}$$

$C = f_R$ For Service Limit States

f_R =	4.68	ksi	flexural resistance
f_b =	4.18	ksi	compressive stress due to effective prestress
S_{bot} =	4798.5	in^3	
$f_{DC\text{-}NC}$ =	2.3	ksi	
$f_{DC\text{-}c}$ =	0.04	ksi	
f_{DW} =	0.65	ksi	
f_{LL+IM} =	1.6	ksi	
$^*\gamma_{DC}$ =	1.00		
$^*\gamma_{LL}$ =	1.00		
$^*\gamma_{DW}$ =	1.00		

$f_R = f_b + Allowable_tenisle_stress$

$$f_b = \frac{P_{pe}}{A} + \frac{P_{pe} * e}{S_b}$$

$$f_{DC} = \frac{M_{DC}}{S_{bot}}$$

$$f_{DW} = \frac{M_{DW}}{S_{bot}}$$

$$f_{LL+IM} = \frac{M_{LL}}{S_{bot}}$$

P_{pe} = 1468.04 kips $\quad P_{pe} = A_{ps} * f_{pe}$
A_{ps} = 8.246 in^2

f_{pe} = 178.03 ksi

$f_{pe} = Initital_Prestress - Total_Prestress_Losses$

* Ref. MBE Table 6A.4.2.2-1 $\quad \Delta f_{plt}$ = 24.47 ksi from Conspan

3S2 Truck Service III	
$RF_{Flexure}$ =	1.04

Transportation
Land Development
Environmental
Services

Computations

VHB *Vanasse Hangen Brustlin, Inc.*

Project	Bridge 93	Project #	57632.00
Location	Castleton, VT	Sheet	
Calculated by	EAF	Date	8/18/14
Checked by		Date	
Title	Load Rating		

3 Axle Straight

3 Axle Moment = 871.5
3 Axle Shear = 55.1

Impact Factor = 1.33
Multiple Presence Factor = 1.0
Impact Factor = 0.65 Positive Moment
0.96 Positive Shear

(* USED MAXIMUM EXTERIOR BEAM VALUES)
(T 1.2.5.1 + 1.2.5.2 for moment values, T 1.2.6.1 + 1.2.6.2 for shear values)

	Dead Load DC		Dead Load DW		Dist. Live Load + Impact	Nominal Capacity
Moment, kip-ft	919.9	14.2	0.0	260.6	753	3903

General Load-Rating Equation:

MBE Eq. 6A.4.2.1-1

$$RF = \frac{C - (\gamma_{DC})(DC) - (\gamma_{DW})(DW) \pm (\gamma_p)(P)}{(\gamma_{LL})(LL + IM)}$$

φ_c = 1.00 Condition Factor, MBE 6A.4.2.3
φ_s = 1.00 System Factor, MBE 6A.4.2.4
φ_f = 1.0 LRFD Resistance Factor for flexure, LRFD 6.5.4.2
φ_s = 0.9 LRFD Resistance Factor for shear, LRFD 6.5.4.2

Strength I Limit State

$C = \varphi_c\, \varphi_s\, \varphi R_n$ for Strength Limit States

$$RF = \frac{C - (\gamma_{DC})(DC) - (\gamma_{DC})(DW)}{(\gamma_{LL})(LL + IM)}$$

*γ_{DC} = 1.25
*γ_{DW} = 1.5
*γ_{LL} = 1.30 OPERATING

3 Axle Straight Strength I	
$RF_{Flexure}$ =	2.39

* Ref. MBE Table 6A.4.2.2-1

Service III Limit State

$$RF = \frac{f_R - (\gamma_{DC})(f_{DC}) - (\gamma_{DW})(f_{DW})}{(\gamma_{LL})(f_{LL+IM})}$$

$C = f_R$ For Service Limit States

f_R = 4.68 ksi flexural resistance $f_R = f_b + Allowable_tensile_stress$
f_b = 4.18 ksi compressive stress due to effective prestress
S_{bot} = 4798.5 in^3

$$f_b = \frac{P_{pe}}{A} + \frac{P_{pe} * e}{S_b}$$

$$f_{DC} = \frac{M_{DC}}{S_{bot}}$$

$$f_{DW} = \frac{M_{DW}}{S_{bot}}$$

$$f_{LL+IM} = \frac{M_{LL}}{S_{bot}}$$

$f_{DC\text{-}NC}$ = 2.3 ksi
$f_{DC\text{-}e}$ = 0.04 ksi
f_{DW} = 0.65 ksi
f_{LL+IM} = 1.9 ksi
*γ_{DC} = 1.00
*γ_{LL} = 1.00
*γ_{DW} = 1.00

P_{pe} = 1468.04 kips $P_{pe} = A_{ps} * f_{pe}$
A_{ps} = 8.246 in^2

f_{pe} = 178.03 ksi

$f_{pe} = Initial_Prestress - Total_Prestress_Losses$

Δf_{plt} = 24.47 ksi from Conspan

3 Axle Service III	
$RF_{Flexure}$ =	0.90

* Ref. MBE Table 6A.4.2.2-1

Transportation
Land Development
Environmental
Services

Computations

VHB *Vanasse Hangen Brustlin, Inc.*

Project	Bridge 93	Project #	57632.00
Location	Castleton, VT	Sheet	
Calculated by	EAF	Date	8/18/14
Checked by		Date	
Title	Load Rating		

4 Axle Straight

4 Axle Moment = 972.5
4 Axle Shear = 61.4

Impact Factor = 1.33
Multiple Presence Factor = 1.0
Impact Factor = 0.65 Positive Moment
0.96 Positive Shear

(* USED MAXIMUM EXTERIOR BEAM VALUES)
(T 1.2.5.1 + 1.2.5.2 for moment values, T 1.2.6.1 + 1.2.6.2 for shear values)

	Dead Load DC		Dead Load DW		Dist. Live Load + Impact	Nominal Capacity
Moment, kip-ft	919.9	14.2	0.0	260.6	841	3903

General Load-Rating Equation:

MBE Eq. 6A.4.2.1-1

$$RF = \frac{C - (\gamma_{DC})(DC) - (\gamma_{DW})(DW) \pm (\gamma_p)(P)}{(\gamma_{LL})(LL + IM)}$$

φ_c = 1.00 Condition Factor, MBE 6A.4.2.3
φ_s = 1.00 System Factor, MBE 6A.4.2.4
φ_f = 1.0 LRFD Resistance Factor for flexure, LRFD 6.5.4.2
φ_s = 0.9 LRFD Resistance Factor for shear, LRFD 6.5.4.2

Strength I Limit State

$C = \varphi_c\ \varphi_s\ \varphi R_n$ for Strength Limit States

$$RF = \frac{C - (\gamma_{DC})(DC) - (\gamma_{DC})(DW)}{(\gamma_{LL})(LL + IM)}$$

*γ_{DC} = 1.25
*γ_{DW} = 1.5
*γ_{LL} = 1.30

4 Axle Straight Strength I	
$RF_{Flexure}$ =	2.14

* Ref. MBE Table 6A.4.2.2-1

Service III Limit State

$$RF = \frac{f_R - (\gamma_{DC})(f_{DC}) - (\gamma_{DW})(f_{DW})}{(\gamma_{LL})(f_{LL+IM})}$$

$C = f_R$ For Service Limit States

$$f_{DC} = \frac{M_{DC}}{S_{bot}}$$

$$f_{DW} = \frac{M_{DW}}{S_{bot}}$$

$$f_{LL+IM} = \frac{M_{LL}}{S_{bot}}$$

f_R = 4.68 ksi flexural resistance $f_R = f_b + Allowable_tenisle_stress$
f_b = 4.18 ksi compressive stress due to effective prestress
S_{bot} = 4798.5 in^3

$$f_b = \frac{P_{pe}}{A} + \frac{P_{pe} * e}{S_b}$$

$f_{DC\text{-}NC}$ = 2.3 ksi
$f_{DC\text{-}c}$ = 0.04 ksi
f_{DW} = 0.65 ksi
f_{LL+IM} = 2.1 ksi
*γ_{DC} = 1.00
*γ_{LL} = 1.00
*γ_{DW} = 1.00

P_{pe} = 1468.04 kips $P_{pe} = A_{ps} * f_{pe}$
A_{ps} = 8.246 in^2

f_{pe} = 178.03 ksi

$f_{pe} = Initital_Prestress - Total_Prestress_Losses$

4 Axle Service III	
$RF_{Flexure}$ =	0.81

* Ref. MBE Table 6A.4.2.2-1 Δf_{plt} = 24.47 ksi from Conspan

Transportation
Land Development
Environmental
Services

Computations

VHB *Vanasse Hangen Brustlin, Inc.*

Project	Bridge 93	Project #	57632.00
Location	Castleton, VT	Sheet	
Calculated by	EAF	Date	8/18/14
Checked by		Date	
Title	Load Rating		

5 Axle Semi

5 Axle Moment = 886.9
5 Axle Shear = 59.5

Impact Factor = 1.33
Multiple Presence Factor = 1.0

Impact Factor = 0.65 Positive Moment
0.96 Positive Shear

(* USED MAXIMUM EXTERIOR BEAM VALUES)
(T 1.2.5.1 + 1.2.5.2 for moment values, T 1.2.6.1 + 1.2.6.2 for shear values)

	Dead Load DC		Dead Load DW		Dist. Live Load + Impact	Nominal Capacity
Moment, kip-ft	919.9	14.2	0.0	260.6	767	3903

General Load-Rating Equation:

MBE Eq. 6A.4.2.1-1

$$RF = \frac{C - (\gamma_{DC})(DC) - (\gamma_{DW})(DW) \pm (\gamma_p)(P)}{(\gamma_{LL})(LL + IM)}$$

φ_c = 1.00 Condition Factor, MBE 6A.4.2.3
φ_s = 1.00 System Factor, MBE 6A.4.2.4
φ_f = 1.0 LRFD Resistance Factor for flexure, LRFD 6.5.4.2
φ_s = 0.9 LRFD Resistance Factor for shear, LRFD 6.5.4.2

Strength I Limit State

$C = \varphi_c\, \varphi_s\, \varphi R_n$ for Strength Limit States

$$RF = \frac{C - (\gamma_{DC})(DC) - (\gamma_{DC})(DW)}{(\gamma_{LL})(LL + IM)}$$

*γ_{DC} = 1.25
*γ_{DW} = 1.5
*γ_{LL} = 1.30

* Ref. MBE Table 6A.4.2.2-1

5 Axle Semi Strength I	
$RF_{Flexure}$ =	2.35

Service III Limit State

$$RF = \frac{f_R - (\gamma_{DC})(f_{DC}) - (\gamma_{DW})(f_{DW})}{(\gamma_{LL})(f_{LL+IM})}$$

$C = f_R$ For Service Limit States

f_R = 4.68 ksi flexural resistance $f_R = f_b + Allowable_tenisle_stress$
f_b = 4.18 ksi compressive stress due to effective prestress
S_{bot} = 4798.5 in^3

$$f_b = \frac{P_{pe}}{A} + \frac{P_{pe} * e}{S_b}$$

$$f_{DC} = \frac{M_{DC}}{S_{bot}}$$

$$f_{DW} = \frac{M_{DW}}{S_{bot}}$$

$$f_{LL+IM} = \frac{M_{LL}}{S_{bot}}$$

$f_{DC\text{-}NC}$ = 2.3 ksi
$f_{DC\text{-}c}$ = 0.04 ksi
f_{DW} = 0.65 ksi
f_{LL+IM} = 1.9 ksi
*γ_{DC} = 1.00
*γ_{LL} = 1.00
*γ_{DW} = 1.00

P_{pe} = 1468.04 kips $P_{pe} = A_{ps} * f_{pe}$
A_{ps} = 8.246 in^2

f_{pe} = 178.03 ksi

$f_{pe} = Initial_Prestress - Total_Prestress_Losses$

Δf_{plt} = 24.47 ksi from Conspan

* Ref. MBE Table 6A.4.2.2-1

5 Axle Service III	
$RF_{Flexure}$ =	0.88

Transportation
Land Development
Environmental
Services

Computations

VHB *Vanasse Hangen Brustlin, Inc.*

Project	Bridge 93	Project #	57632.00
Location	Castleton, VT	Sheet	
Calculated by	EAF	Date	8/18/14
Checked by		Date	
Title	Load Rating		

6 Axle Trailer

6 Axle Moment = 1127.1
6 Axle Shear = 87.4

Impact Factor = 1.33
Multiple Presence Factor = 1.0
Impact Factor = 0.65 Positive Moment
0.96 Positive Shear

(* USED MAXIMUM EXTERIOR BEAM VALUES)
(T 1.2.5.1 + 1.2.5.2 for moment values, T 1.2.6.1 + 1.2.6.2 for shear values)

	Dead Load DC		Dead Load DW		Dist. Live Load + Impact	Nominal Capacity
Moment, kip-ft	919.9	14.2	0.0	260.6	974	3903

General Load-Rating Equation:

MBE Eq. 6A.4.2.1-1

$$RF = \frac{C - (\gamma_{DC})(DC) - (\gamma_{DW})(DW) \pm (\gamma_p)(P)}{(\gamma_{LL})(LL + IM)}$$

φ_c = 1.00 Condition Factor, MBE 6A.4.2.3
φ_s = 1.00 System Factor, MBE 6A.4.2.4
φ_f = 1.0 LRFD Resistance Factor for flexure, LRFD 6.5.4.2
φ_s = 0.9 LRFD Resistance Factor for shear, LRFD 6.5.4.2

Strength I Limit State

$C = \varphi_c\, \varphi_s\, \varphi R_n$ for Strength Limit States

$$RF = \frac{C - (\gamma_{DC})(DC) - (\gamma_{DC})(DW)}{(\gamma_{LL})(LL + IM)}$$

*γ_{DC} = 1.25
*γ_{DW} = 1.5
*γ_{LL} = 1.30

6 Axle Trailer Strength I	
$RF_{Flexure}$ =	1.85

* Ref. MBE Table 6A.4.2.2-1

Service III Limit State

$$RF = \frac{f_R - (\gamma_{DC})(f_{DC}) - (\gamma_{DW})(f_{DW})}{(\gamma_{LL})(f_{LL+IM})}$$

$C = f_R$ For Service Limit States

f_R = 4.68 ksi flexural resistance $f_R = f_b + Allowable_tenisle_stress$
f_b = 4.18 ksi compressive stress due to effective prestress
S_{bot} = 4798.5 in^3

$$f_b = \frac{P_{pe}}{A} + \frac{P_{pe} * e}{S_b}$$

$$f_{DC} = \frac{M_{DC}}{S_{bot}}$$

$$f_{DW} = \frac{M_{DW}}{S_{bot}}$$

$$f_{LL+IM} = \frac{M_{LL}}{S_{bot}}$$

$f_{DC\text{-}NC}$ = 2.3 ksi
$f_{DC\text{-}c}$ = 0.04 ksi
f_{DW} = 0.65 ksi
f_{LL+IM} = 2.4 ksi
*γ_{DC} = 1.00
*γ_{LL} = 1.00
*γ_{DW} = 1.00

P_{pe} = 1468.04 kips $P_{pe} = A_{ps} * f_{pe}$
A_{ps} = 8.246 in^2

f_{pe} = 178.03 ksi

$f_{pe} = Initital_Prestress - Total_Prestress_Losses$

6 Axle Service III	
$RF_{Flexure}$ =	0.70

* Ref. MBE Table 6A.4.2.2-1 Δf_{plt} = 24.47 ksi from Conspan

Transportation
Land Development
Environmental
Services

Computations

Vanasse Hangen Brustlin, Inc.

Project	Bridge 93	Project #	57632.00
Location	Castleton, VT	Sheet	
Calculated by	EAF	Date	8/18/14
Checked by		Date	
Title	Load Rating		

Summary of Load Cases:

Span = 66.77'

Maximum Live Load Forces				
Load Case/Truck:		**Strength I**		**Service III**
Config.	**Number of axles**	**$RF_{flexure}$**		**$RF_{flexure}$**
3S2 Truck	5	2.77		1.04
6 Axle Trailer	6	1.85		0.70
3 Axle Straight	3	2.39		0.90
4 Axle Straight	4	2.14		0.81
5 Axle Semi	5	2.35		0.88

LRFR LOAD RATING FACTORS							
	TRUCK						
LOADING LEVELS	H20	HL-93	3S2	6 AXLE	3 A. STR.	4. A. STR.	5. A. SEMI
TONNAGE	20	36	36.0	66.0	30.0	34.5	38
INVENTORY	2.03	1.10					
POSTING							
OPERATING	2.85	1.46	2.77	1.85	2.39	2.14	2.35
COMMENTS:							

Note: HL-93 and H20 rating factors taken from conspan. 3S2, 3 Axle, 4 Axle and 6 Axle rating factors were calculated by hand using Conspan outputs