VHB Proj. 57632
Castleton, VT
Route VT 30 - Bridge #93
Project No. BRF 015-2(10)

Prepared by ***VHB*/Vanasse Hangen Brustlin, Inc.**

Table of Contents

Abutment Design 1.0

Wingwall & Cheekwall Design 2.0

Pile Design Check 3.0

Sheet Pile Elevations 4.0

Section 1.0
Abutment Design

VHB *Computations*

Project: Br #93 | Project # 57632.00
Location: Castleton, VT | Sheet of
Calculated by: EAF | Date: 3/19/14
Checked by: KBR | Date: 4/22/14
Title Abutment Design

Integral Abutments:

- ℄ Brg to ℄ Brg = 67.3'
- Abutments skewed 18°
- Reference VTrans Integral Abutment Design Guidelines, 2008
- Per Geotechnical Report, use (6) HP 12x63 piles organized in a single row spaced at 6'-6" OC
  (min. embedment is 25' below bottom of pile cap, Pile lengths should be assumed at 70')
- Concrete cap dimensions: 44.3' x 3.5' x pile cap height
- Bridge out-out = 35'-0"

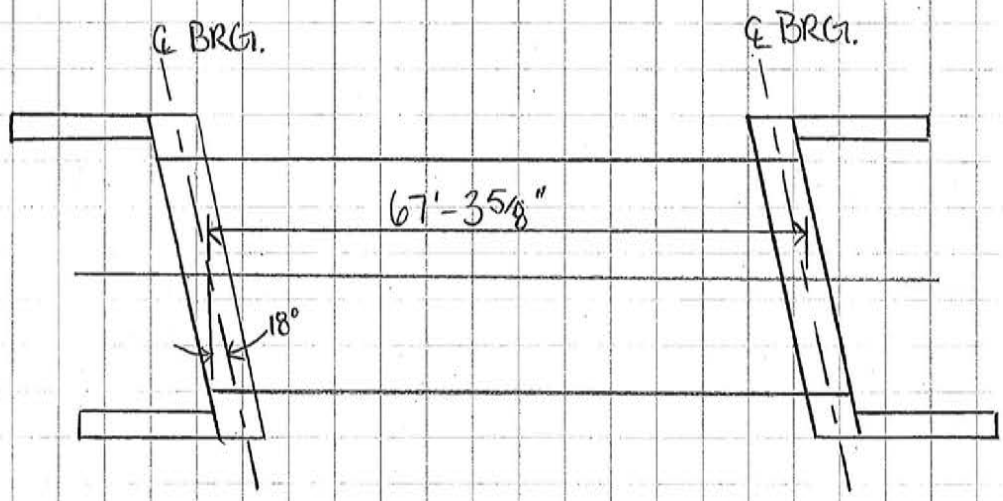

VHB *Computations*

Project: Br #93 Project # 57632.00
Location: Castleton, VT Sheet of
Calculated by: EAF Date: 3/19/14
Checked by: Date:
Title Construction Joint - Abutments

Optional Construction Joint for Abutment

Abutment Caps are ~44' long. Provide an optional construction joint for precast cap for easier shipping & construction

Construction joint must be located to miss pile blockout and not fall beneath bearings.

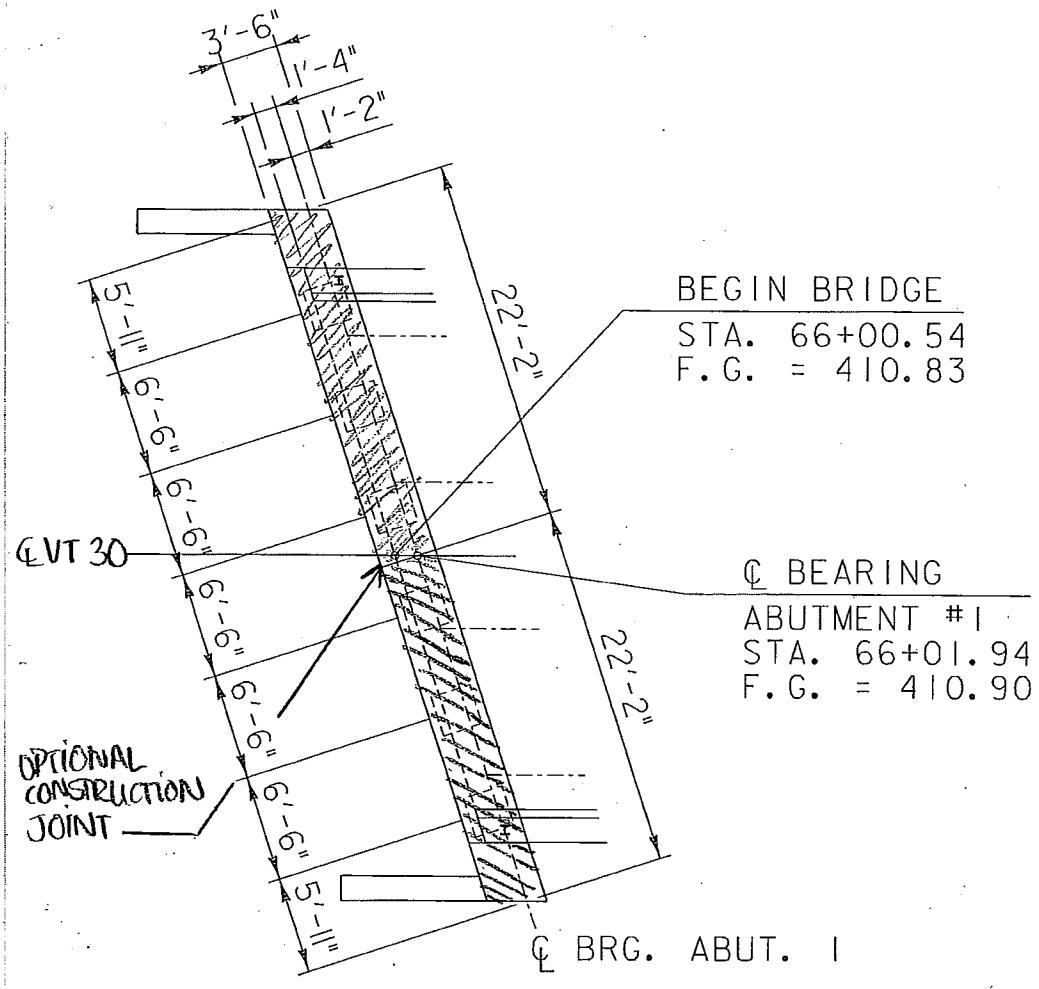

VHB *Computations*

Project: Br #93 Project # 57632.00
Location: Castleton, VT Sheet of
Calculated by: EAF Date: 3/19/14
Checked by: Date:
Title

Abutment Height

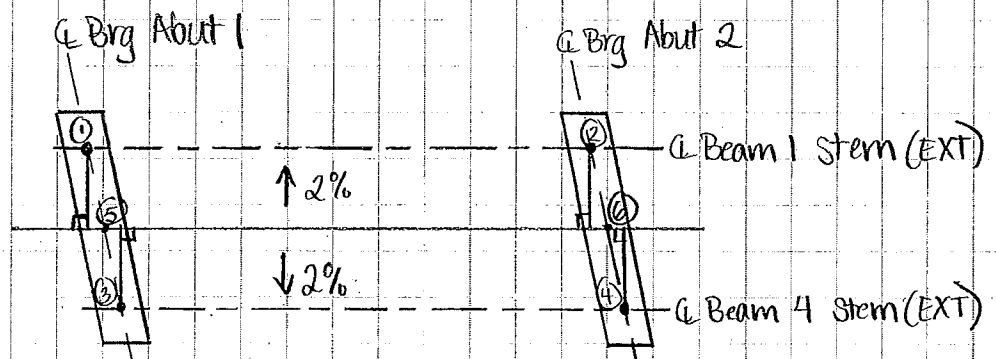

	STA.	Offset	F.G. @ ℄ VT 30	EL @ Offset
① =	65+96.79,	15.86' LT	410.65 - 3.1505 =	407.50'
② =	66+64.09,	15.86' LT	413.23 - 3.1505 =	410.08'
③ =	66+07.09,	15.85' RT	411.14 - 3.1505 =	407.99'
④ =	66+74.39,	15.85' RT	413.50 - 3.1505 =	410.35'

aids in abutment seat calcs, see spreadsheet next sheet

From F.G. @ ℄ VT 30, subtract out:

SLOPE = 0.02(15.86)
PAVEMENT = 4/12
BEAM = 28/12
BEARING = 2/12
Σ = 3.1505'

(Ref. Geotech Loads:
Bottom Abutment Cap 1 = 399.50
Bottom Abutment 2 Cap = 401.50)

⑤ = 66+01.94 F.G. = 410.90 ⇒ 408.07 @ ℄ VT 30 & ℄ Brg.
⑥ = 66+69.24 F.G. = 413.37 ⇒ 410.54 @ ℄ VT 30 & ℄ Brg

Project:	Br # 93	VHB Proj #:	57632
Location:	Castleton, VT	Sheet:	__ of ___
Calculated By:	EAF	Date:	6/3/2014
Checked By:		Date:	
Title:	Abutment Seat Elevations		

From top of Pavement to Abutment Seat =	2.833	ft
Plan view distance between Stems =	5.2573	ft
Plan view distance between Beams (between ext stems)=	4.1551	ft

Beam	Abut 1	Abut 2	Offset	Slope	F.G. Elevation Abut 1	F.G. Elevation Abut 2	Elevation at Top of Pavement & Beam Stem Abut 1	Elevation at Top of Pavement & Beam Stem Abut 2	Proposed EL @ Abutment Seat Abut 1	Proposed EL @ Abutment Seat Abut 2		Slope Between Stems Abut 1	Slope Between Stems Abut 2	Slope across Abutment	Actual Seat Elevations Abut 1	Actual Seat Elevations Abut 2
B1-1	65+96.79	66+64.09	-15.86	2.00%	410.65	413.23	410.33	412.92	407.50	410.08					407.54	410.04
												3.41%	2.73%			
B1-2	65+98.41	66+65.71	-10.86	2.00%	410.73	413.28	410.51	413.06	407.68	410.23					407.70	410.20
											avg Slope =	3.06%		3.06%		
B2-1	65+99.69	66+66.99	-6.91	2.00%	410.79	413.31	410.66	413.17	407.82	410.34					407.83	410.33
												3.39%	2.70%			
B2-2	66+01.32	66+68.62	-1.91	2.00%	410.87	413.35	410.83	413.31	408.00	410.48					407.99	410.49
															OK	OK
B3-1	66+02.56	66+69.86	1.91	-2.00%	410.93	413.38	410.89	413.35	408.06	410.51					408.07	410.50
												-0.43%	-1.13%			
B3-2	66+04.18	66+71.48	6.91	-2.00%	411.01	413.42	410.87	413.29	408.04	410.45					408.03	410.46
											avg Slope =	-0.80%		-0.80%		
B4-1	66+05.47	66+72.77	10.85	-2.00%	411.07	413.46	410.85	413.24	408.02	410.41					407.99	410.43
												-0.48%	-1.16%			
B4-2	66+07.09	66+74.39	15.85	-2.00%	411.14	413.50	410.83	413.18	407.99	410.34					407.95	410.39

note: These elevations are at ℄ Stem, extend out to cheekwalls to get elevations @ ℄ Brg + Cheekwall

* - In order to maintain the same grades at both abutments to avoid twisting the NEXT Beams, the abutment seat will need to be:
- Abutment 1 @ Beam 1: Seat needs to be 0.5" above proposed abutment seat
- Abutment 1 @ Beam 4: Seat needs to be 0.5" below proposed abutment seat
- Abutment 2 @ Beam 1: Seat needs to be 0.5" below proposed abutment seat
- Abutment 2 @ Beam 4: Seat needs to be 0.5" above proposed abutment seat

(SEE "OK", to verify that at the center of the abutment, grade remains similar and does not affect pavement depth)

** - Will need to incorporate +/- 0.5" into curb details and pavement depth

Add/Subtract from Curb at beam Ends:

Beam	Abut 1 (ft)	Abut 2 (ft)
B1-1	0.04	-0.04
B1-2	0.02	-0.02
B2-1	0.01	-0.01
B2-2	-0.01	0.01
B3-1	0.01	-0.01
B3-2	-0.01	0.01
B4-1	-0.02	0.02
B4-2	-0.04	0.04

VHB *Computations*

Project: Br #93 Project # 57632.00
Location: Castleton, VT Sheet of
Calculated by: EAF Date: 3/19/14
Checked by: KBR Date: 4/22/14
Title Construction Joint - Abutment

Optional Construction Joint

Calculate approximate weight of Abutment caps:

▷ Both caps are ~22'-2" long
Calc weight of heavier cap: "RT" side of road has taller Abut

Area of cap (plan view) = 78.25 sf
(Abut 2) Depth of Cap = (410.35 - 401.50) ft = 8.85'
volume = 692.51

↑ the larger cap, has more depth

Subtract out 2' galv. pipe void for ~22'-2" Cap = 3 ea (8.85')$(\frac{1}{2} \times 2)^2 \pi$ = 83.4 cf

Wt. of heavier ~22'-2" cap = (693 cf - 83 cf) $\times \frac{150 \text{ lb}}{\text{ft}^3}$ = 91,500 lb *

* Does not include weight from Cheekwall (~ + 6600 lb)

VHB *Computations*

Project: Br #93 | Project # 57632.00
Location: Castleton, VT | Sheet of
Calculated by: EAF | Date: 3/19/14
Checked by: | Date:
Title Wingwall @ Abutment Elevation

EL Road @ ℄ Beams & ℄ Abutment

	℄ Abutment No. 1	℄ Abutment No. 2
Beam 1	65+97.59, 13.40' LT 410.69 - 0.02(13.40) = 410.42	66+64.89, 13.40' LT 413.25 - 0.02(13.40) = 412.98
Beam 2	66+00.49, 4.47' LT 410.83 - 0.02(4.47) = 410.74	66+67.79, 4.47' LT 413.33 - 0.02(4.47) = 413.24
Beam 3	66+03.39, 4.45' RT 410.97 - 0.02(4.45) = 410.88	66+70.69, 4.45' RT 413.41 - 0.02(4.45) = 413.32
Beam 4	66+06.30, 13.40' RT 411.11 - 0.02(13.40) = 410.84	66+73.59, 13.40' RT 413.48 - 0.02(13.40) = 413.21

Approx Abutment Seat Elevations:

Avg. Elevations @ Abut. 1 = $\frac{410.42 + 410.74 + 410.88 + 410.84}{4} = 410.72$

Avg. Elevations @ Abut. 2 = $\frac{412.98 + 413.24 + 413.32 + 413.21}{4} = 413.19$

Subtract out: Pavement + Beam + Bearing
$(4/12) + (28/12) + (2/12) = 2.83'$

~Beam Seat EL @ A1 = 407.89
@ A2 = 410.36
} matches w/ Abut Ht. calcs.

VHB Computations

Project: Br #93 | Project # 57632.00
Location: Castleton, VT | Sheet of
Calculated by: EAF | Date: 3/20/14
Checked by: | Date:
Title Wingwall @ Abutment Elevation

Wingwall Sketch

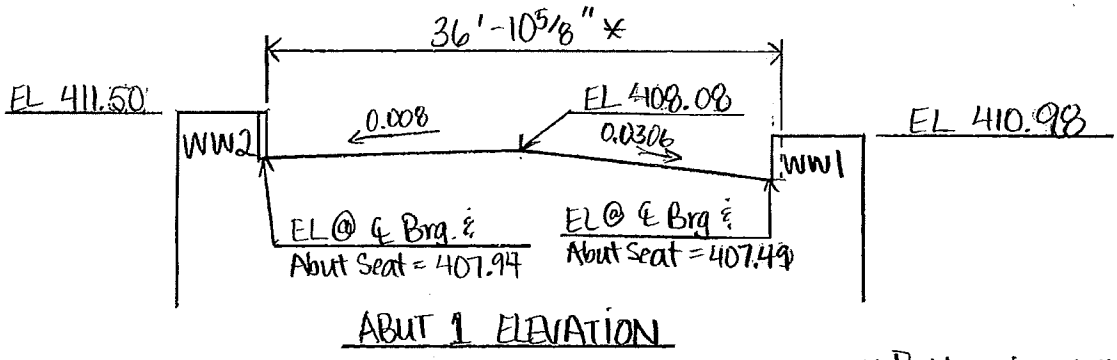

ABUT 1 ELEVATION

* Bridge is 35' wide, 18° abutment skew, + 1/2" cork each side (TYP)

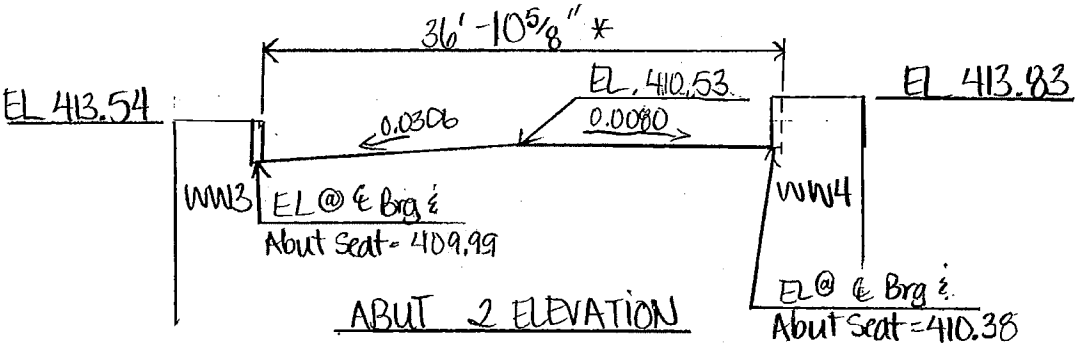

ABUT 2 ELEVATION

* - Abutment seats have the same slope to avoid twisting of beams.

Project: Br #93
Location: Castleton, VT
Calculated by: EAF
Checked by: KBR
Title

Project # 57632.00
Sheet of
Date: 3/20/14
Date: 4/22/14

Piles

- Per LRFD 10.7.1.2, the distance from the side of any pile to the nearest edge of the pile cap shall not be less than 9.0 in.
  - Tops of piles shall project at least 12.0" into cap.

- Per Geotechnical Report: use HP 12x63 spaced @ 6.5'

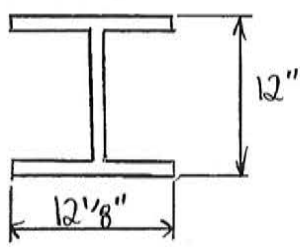

- VTrans Std. Spec 505.04, "Driving of Piling":
  - after driving, piling shall not vary more than 1/4" per foot from vertical (max out of tolerance = 6" at top of pile)
  - the rotation about the vertical axis of the pile shall not vary by more than 5° from what is shown on the plans

- Length of piles (per geotech report, assume 70')

$70' \times 0.25'' = 17.5'' > 6''$, use $\underline{\underline{6''}}$

Project: Br #93
Location: Castleton, VT
Calculated by: EAF
Checked by: KBR
Title

Project # 57632.00
Sheet of
Date: 3/20/14
Date: 4/22/14

Piles

- Include ~3" tolerance for concrete grout between pile & cap

Total Tolerance between Pile & Cap = 6" ≤ 9" LRFD ✓ OK

Total Size of void in Concrete = 6" + 12" + 6" = 24"

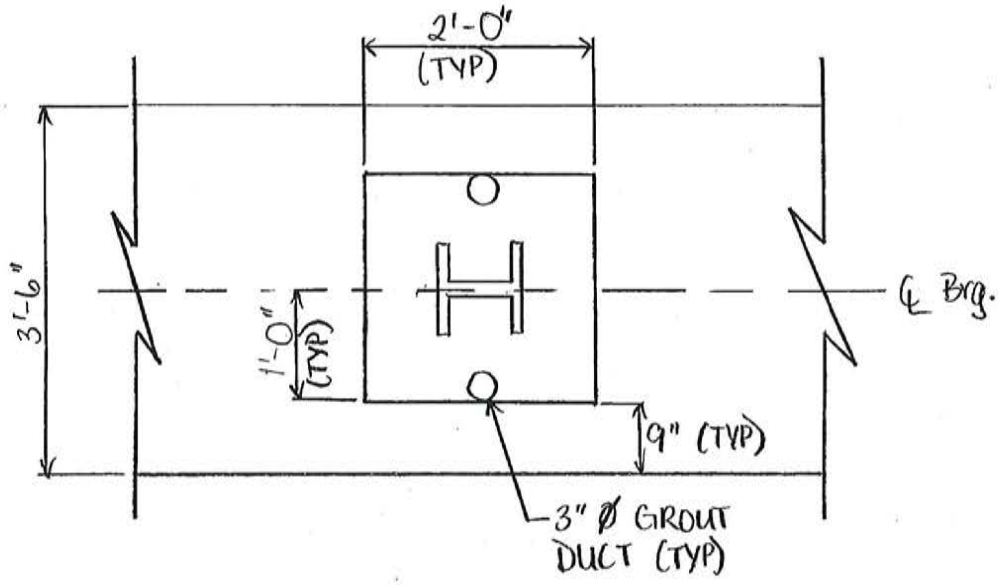

VHB *Computations*

Project: Br #93
Location: Castleton, VT
Calculated by: EAF
Checked by: KBR
Title LARSA Schematic

Project # 57632.00
Sheet of
Date: 3/20/14
Date: 4/22/14

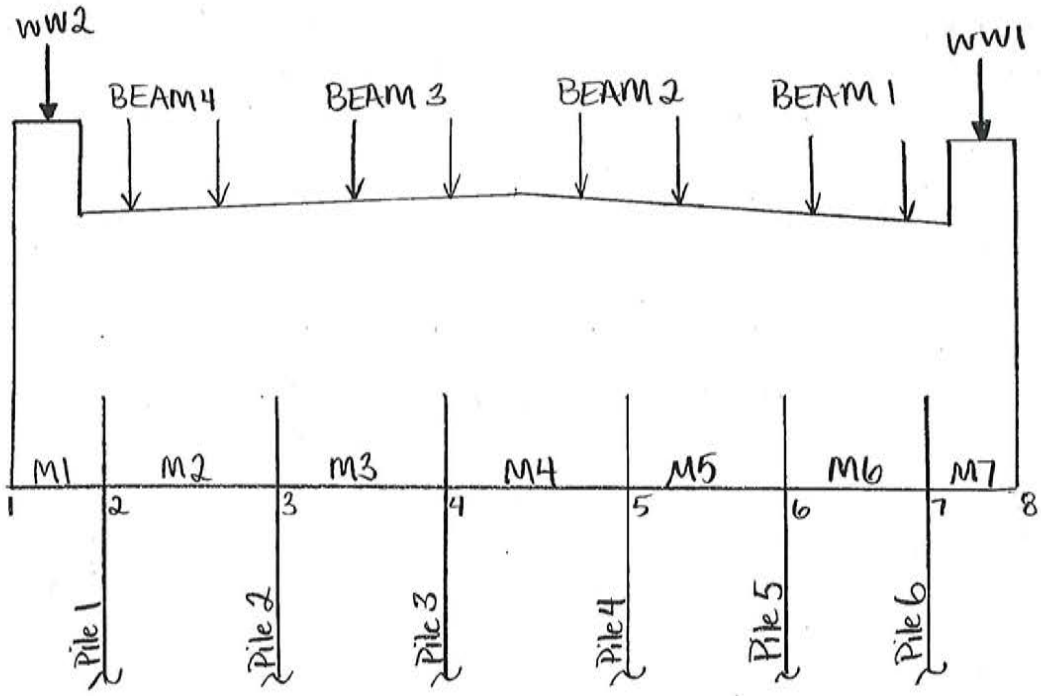

Abutment 1 Elevation

*See spreadsheet for Loads & Locations

Project: Br #93
Location: Castleton, VT
Calculated by: EAF
Checked by: KBR
Title Abutment Design

Project # 57632.00
Sheet of
Date: 3/20/14
Date: 4/22/14

Active Earth Pressure to Abutment Cap:

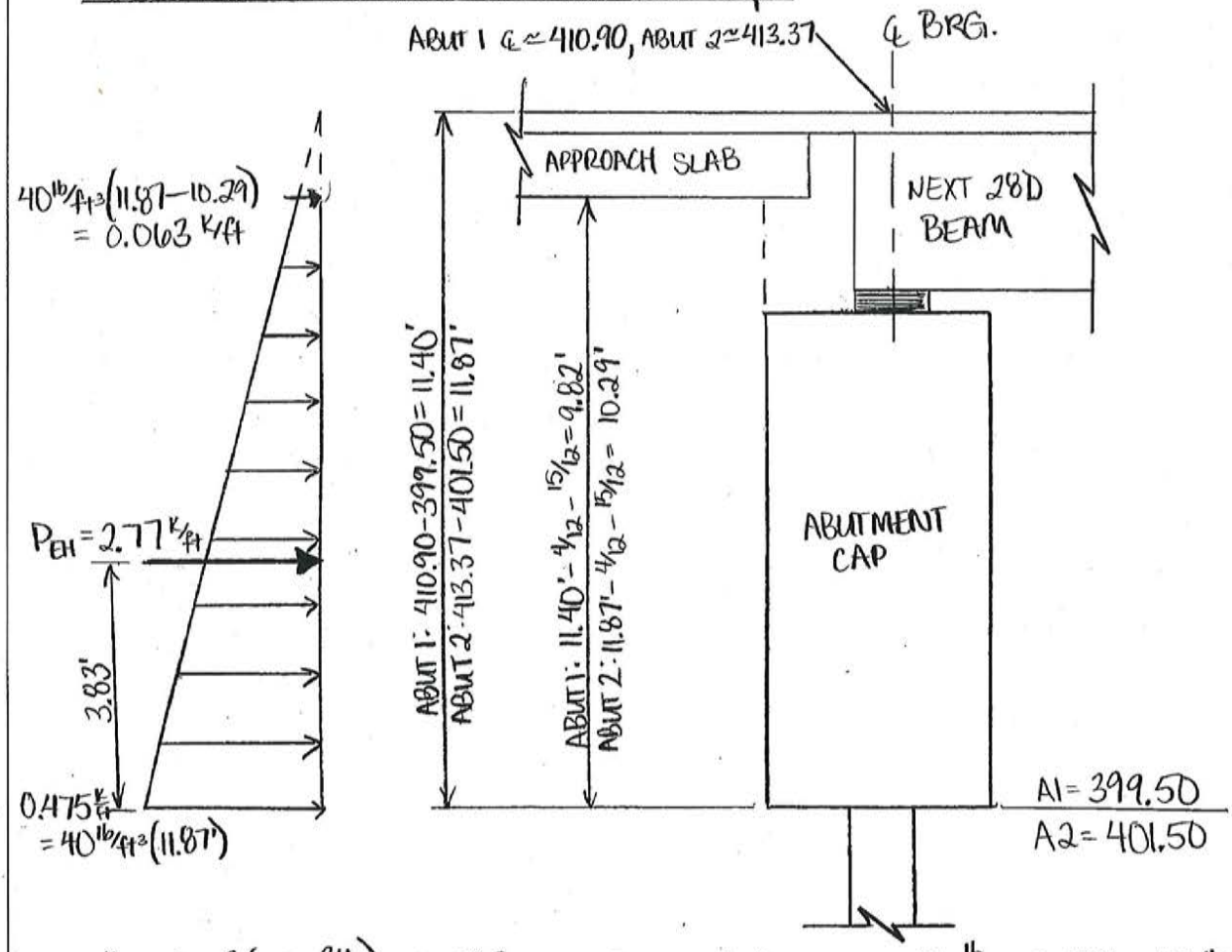

$K_a = \tan^2(45 - 34/2) = 0.283$ Eq. Fluid Pressure $= 140 \frac{lb}{ft^3} \times 0.283 = 40 \, lb/ft^3$

$$P_{EH} = \left[\frac{(11.87 - 10.29) + 11.87}{2}\right] * 40 \, lb/ft^3 * 10.29 = \underline{\underline{2.77 \text{ Kip/ft}}}$$

$$\bar{X} = \frac{10.29(2 * 0.063 + 0.475)}{3(0.063 + 0.475)} = \underline{\underline{3.83'}}$$

Project: Br #93
Location: Castleton, VT
Calculated by: EAF
Checked by:
Title Abutment Design

Project # 57632.00
Sheet of
Date: 5/2/14
Date:

for Passive earth pressure: (CLOSURE POUR CHECK)

$K_p = \tan^2(45 + \phi/2)$

$= \tan^2(45 + 34/2) = \underline{3.537}$

Eq. Fluid Pressure $= 140\ lb/ft^3 (3.537) = 495.2\ lb/ft^3$

$P_{EH} = \left[\frac{(11.87 - 10.29) + 11.87}{2}\right] * 495.2\ \frac{lb}{ft^3} * 10.29 = \underline{34.27\ kip/ft}$

$\bar{X} = \frac{10.29(2 * 0.782 + 5.9)}{3(0.782 + 5.9)} = 3.83'$

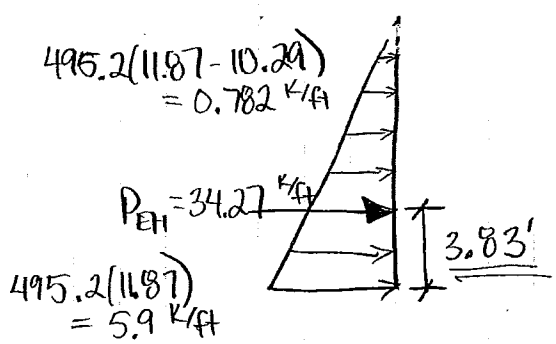

VHB *Computations*

Project: Br #93 | Project # 57632.00
Location: Castleton, VT | Sheet of
Calculated by: EAF | Date: 3/20/14
Checked by: | Date:
Title Abutment Reinforcing

ABUTMENT 1 = ABUTMENT 2 (rotated 180°)

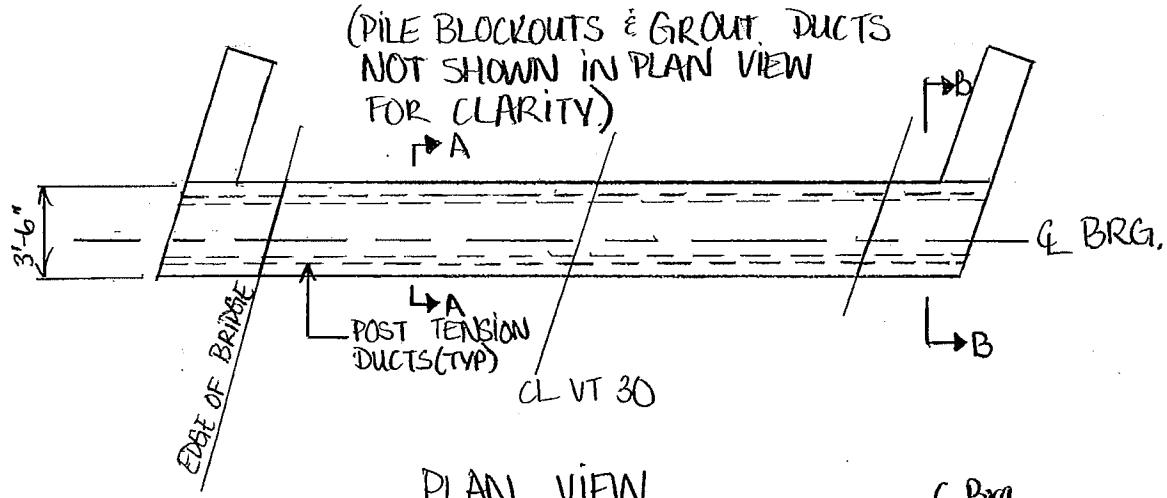

PLAN VIEW

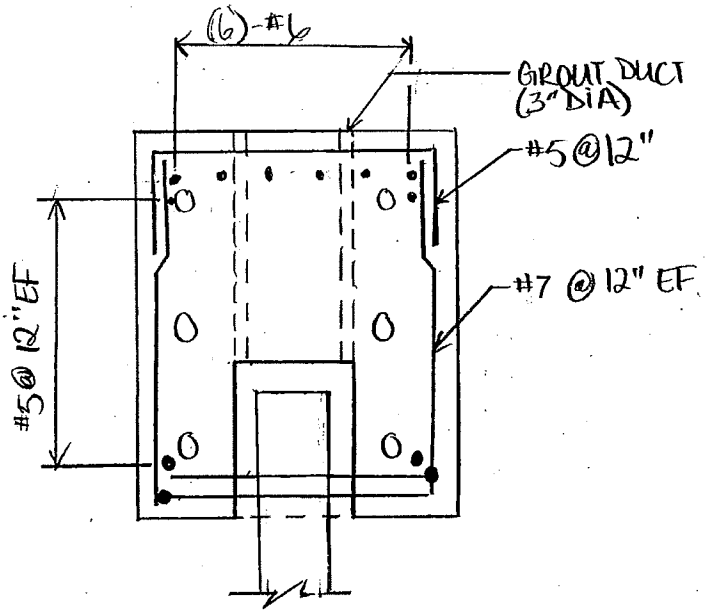

SECTION A-A

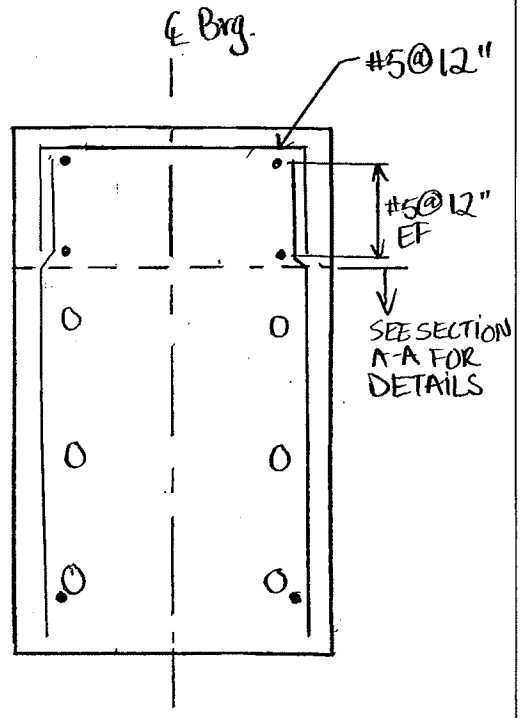

SECTION B-B

Transportation
Land Development
Environmental
Services

Computations

Vanasse Hangen Brustlin, Inc.

Project	Br. 93	Project #	57632.00
Location	Castleton, VT	Sheet	
Calculated By	EAF	Date	3/20/2014
Checked By	KBR	Date	4/22/14
Title	Abutment Design Loads		

Loads to Abutment (Strength)

[ ] = Input in Shaded Cells

Width of Bridge =	35.000	ft
Weight of Concrete =	150	lb/ft^3
CL Brg. To CL Brg. =	67.3	ft
Width of Bridge along Skew =	36.8012	ft
Spacing Between Piles =	6.5	ft

beams = 4

PILE CAP DESIGN LOADS:

Permanent Dead Loads on Pile Cap:

Length of Beams = 68.35 ft

Factors for Strength Loads:

DC =	1.25
LL =	1.75
DW =	1.5

From Conspan (Strength I with DF):

(Interior Beam)

Reactions (kips)	LT Support	RT Support
Self Wt. =	59.6	59.6
DL-Prec (DC) =	3.2	3.2
DL-Comp (DC) =	1.1	1.1
DL-Comp (DW) =	23.2	23.2
Live (w/ impact) =	174.9	174.9

(Exterior Beam)

Reactions (kips)	LT Support	RT Support
Self Wt. =	59.6	59.6
DL-Prec (DC) =	13.2	13.2
DL-Comp (DC) =	1.1	1.1
DL-Comp (DW) =	23.2	23.2
Live (w/ impact) =	160.9	160.9

Weight of Curtain Wall:

(See Shaded area in drawing to the right for XS area of curtain wall)

XS Area of "Curtain Wall" =	3.4167	ft^2
Width of Bridge =	36.801	ft
Curtain Wall Weight =	29.1	kips
Curtain Wall Wt. With Factor =	**36**	**kips**

Area between beam stem =	10.26	sf
Width over Abutment Cap =	1.667	ft

Approach Slab Loads: (Refer to Loads calculated for Geotech

Uniform Reaction to Bridge Seat =	1.59375	klf
Curb to Curb Length =	32.5953	ft

Abut. 1 = Abut. 2 =	**51.9**	**kips**	**per Abutment**
Abut. 1 with Factor =	**64.9**	**kips**	**per Abutment**

Approach Slab Live Load =	11.78	kips
Approach Slab LL with Factor =	**20.615**	**kips**

Wearing Surface over Approach Slab = 3" Thickness

Wearing Surface Weight =	13.68	kips	per Abutment
Wearing Surface with Factor =	**20.5**	**kips**	

Passive Earth Pressure:

From hand calculations: **34.27** **k/ft**

Transportation
Land Development
Environmental
Services

VHB Vanasse Hangen Brustlin, Inc.

Computations

Project	Br. 93	Project #	57632.00
Location	Castleton, VT	Sheet	
Calculated By	EAF	Date	3/20/2014
Checked By	KBR	Date	4/23/14
Title	Abutment Design Loads		

Loads to Abutment (Strength)

Wingwall Loads:

Wingwalls will be "butterfly" wingwalls and will canitlever off of the abutment cap. Also include Cheek on abutment that are same height as curb

Cheek Walls:

Approx EL. WW3 =	413.54	Plan View Area =	13.0338	sf
Approx EL. WW4 =	413.83	Plan View Area =	13.0338	sf
Approx EL. of Abut Seat =	410.36			

Volume of Concrete:

WW3 =	41.45	cf
WW4 =	45.23	cf
Max =	45.23	cf

Weight of Concrete = 150 lb/cf

Weight of Wingwall over Abutment = 7 kips per abutment

Cheek Wall with Factor = 8.48 kips

Butterfly Wingwalls Approx Bottom of Abutment El = 401.5

WW3:

Plan View Area =	15.37	sf			
Approx Height =	12.04	ft			
Weight WW3 =	28	kip	**with LF =**	**35**	**kips**
			Include Cheek Wall over abutment:	**38.93**	**kips**

WW4:

Plan View Area =	14.63	sf			
Approx Height =	12.33	ft			
Weight WW4 =	27	kip	**with LF =**	**34**	**kips**
			Include Cheek wall over abutment:	**38.07**	**kips**

Precast Cap Weight:

Calculate volume of blockouts for piles:

Plan View Area =	6.25	sf
Depth =	3.5	ft
Volume of Blockout =	**21.875**	**cf**

22'-2" Lighter Abutment Cap Piece:

Plan View area of Cap =	76.9257	sf
Depth of Cap =	8.86	ft
Volume =	**681.561702**	**cf**

There are 3 blockouts for the 22'-2" Abutment Cap Piece which give conc. Volume of: 615.94 cf

Wt. of 14'-9" Concrete Cap = 92.39 kips

Including Load Factor = 115.49 kips

22'-2" Heavier Abutment Cap Piece:

Plan View area of Cap =	78.2526	sf
Depth of Cap =	8.86	ft
Volume =	**693.318036**	**cf**

There are 3 blockouts for the 22'-2" Abutment Cap Piece which give conc. Volume of: 627.69 cf

Wt. of 14'-9" Concrete Cap = 94.15 kips

Including Load Factor = 117.69 kips

Include as a uniform load across whole 44'-4" beam = 5.26 klf

Transportation
Land Development
Environmental
Services

Computations

Vanasse Hangen Brustlin, Inc.

Project	Br. 93	Project #	57632.00
Location	Castleton, VT	Sheet	
Calculated By	EAF	Date	3/20/2014
Checked By	KBR	Date	4/22/14
Title	Abutment Design Loads		

Loads to Abutment (Strength)

DESIGN LOADS TO ABUTMENT CAPS at Beam Stem locations:

Abutment 1 Loads = Abutment 2 Loads

Wingwall over Abutment and Wingwall Loads =			What kind of Load?	From Which Pile	Distance:
WW3 Side =	38.9	kips	Point Load	0	1.407
WW4 Side =	38.9	kips	Point Load	6	5.9183

Beam 1:

Dead Loads per beam:					
Beam Self Wt. =	59.6	kips			
DL-Prec (DC) =	13.2	kips			
DL-Comp (DC) =	1.1	kips			
Curtain Wall =	9.1	kips			
Approach Slab =	16.2	kips			
TOTAL =	99.2	kips			
Dead load per web:	**49.59**	**kips**	Point	0	5.4918
Dead load per web:	**49.59**	**kips**	Point	1	4.8308
Live Loads per beam :					
Truck on Bridge =	160.90	kips			
On Approach Slab =	5.15	kips			
TOTAL =	166.05	kips			
Live load per web:	**83.03**	**kips**	Point	0	5.4918
Live load per web:	**83.03**	**kips**	Point	1	4.8308
DW per beam :					
DL-Comp (DW) =	23.23	kips			
DW Approach Slab =	5.13	kips			
TOTAL =	28.36	kips			
DW per web:	**14.18**	**kips**	Point	0	5.4918
DW per web:	**14.18**	**kips**	Point	1	4.8308

Beam 2:

Dead Loads per beam:					
Beam Self Wt. =	59.6	kips			
DL-Prec (DC) =	3.2	kips			
DL-Comp (DC) =	1.1	kips			
Curtain Wall =	9.1	kips			
Approach Slab =	16.2	kips			
TOTAL =	89.2	kips			
Dead load per web:	**44.59**	**kips**	Point	2	2.4819
Dead load per web:	**44.59**	**kips**	Point	3	1.2392
Live Loads per beam :					
Truck on Bridge =	174.90	kips			
On Approach Slab =	5.15	kips			
TOTAL =	180.05	kips			
Live load per web:	**90.03**	**kips**	Point	2	2.4819
Live load per web:	**90.03**	**kips**	Point	3	1.2392
DW per beam :					
DL-Comp (DW) =	23.23	kips			
DW Approach Slab =	5.13	kips			
TOTAL =	28.36	kips			
DW per web:	**14.18**	**kips**	Point	2	2.4819
DW per web:	**14.18**	**kips**	Point	3	1.2392

Transportation
Land Development
Environmental
Services

Computations

Vanasse Hangen Brustlin, Inc.

Project	Br. 93	Project #	57632.00
Location	Castleton, VT	Sheet	
Calculated By	EAF	Date	3/20/2014
Checked By	KBR	Date	4/22/14
Title	Abutment Design Loads		

Loads to Abutment (Strength)

Beam 3:

Dead Loads per beam:

Beam Self Wt. =	59.6	kips			
DL-Prec (DC) =	3.2	kips			
DL-Comp (DC) =	1.1	kips			
Curtain Wall =	9.1	kips			
Approach Slab =	16.2	kips			
TOTAL =	89.2	kips			
Dead load per web:	**44.59**	**kips**	Point	3	5.2549
Dead load per web:	**44.59**	**kips**	Point	4	4.0123

Live Loads per beam :

Truck on Bridge =	174.90	kips			
On Approach Slab =	5.15	kips			
TOTAL =	180.05	kips			
Live load per web:	**90.03**	**kips**	Point	3	5.2549
Live load per web:	**90.03**	**kips**	Point	4	4.0123

DW per beam :

DL-Comp (DW) =	23.23	kips			
DW Approach Slab =	5.13	kips			
TOTAL =	28.36	kips			
DW per web:	**14.18**	**kips**	Point	3	5.2549
DW per web:	**14.18**	**kips**	Point	4	4.0123

Beam 4:

Dead Loads per beam:

Beam Self Wt. =	59.6	kips			
DL-Prec (DC) =	13.2	kips			
DL-Comp (DC) =	1.1	kips			
Curtain Wall =	9.1	kips			
Approach Slab =	16.2	kips			
TOTAL =	99.2	kips			
Dead load per web:	**49.59**	**kips**	Point	5	1.6633
Dead load per web:	**49.59**	**kips**	Point	6	0.4206

Live Loads per beam :

Truck on Bridge =	160.90	kips			
On Approach Slab =	5.15	kips			
TOTAL =	166.05	kips			
Live load per web:	**83.03**	**kips**	Point	5	1.6633
Live load per web:	**83.03**	**kips**	Point	6	0.4206

DW per beam :

DL-Comp (DW) =	23.23	kips			
DW Approach Slab =	5.13	kips			
TOTAL =	28.36	kips			
DW per web:	**14.18**	**kips**	Point	5	1.6633
DW per web:	**14.18**	**kips**	Point	6	0.4206

Transportation
Land Development
Environmental
Services

Computations

Vanasse Hangen Brustlin, Inc.

Project	Br. 93	Project #	57632.00
Location	Castleton, VT	Sheet	
Calculated By	EAF	Date	3/20/2014
Checked By	KBR	Date	4/22/14
Title	Abutment Design Loads		

Loads to Abutment (Strength)

SUMMARIZE DESIGN LOADS TO ABUTMENT CAPS to put into LARSA:

Abutment 1 Loads = Abutment 2 Loads

Cheek & Wingwalls:		Load (kips)	On Member:	Start Position
	WW3 DL =	39	1	0.2377
	WW4 DL =	39	7	1.0000

Beam 1:		Load (kips)	On Member:	Location (ft)
Beam 1A	DL =	49.59	1	0.9279
	LL =	83.03		
	DW =	14.18		
Beam 1B	DL =	49.59	2	0.7432
	LL =	83.03		
	DW =	14.18		

Beam 2:		Load (kips)	On Member:	Location (ft)
Beam 2A	DL =	44.59	3	0.3818
	LL =	90.03		
	DW =	14.18		
Beam 2B	DL =	44.59	4	0.1906
	LL =	90.03		
	DW =	14.18		

Beam 3:		Load (kips)	On Member:	Location (ft)
Beam 3A	DL =	44.59	4	0.8084
	LL =	90.03		
	DW =	14.18		
Beam 3B	DL =	44.59	5	0.6173
	LL =	90.03		
	DW =	14.18		

Beam 4:		Load (kips)	On Member:	Location (ft)
Beam 4A	DL =	49.59	6	0.2559
	LL =	83.03		
	DW =	14.18		
Beam 4B	DL =	49.59	7	0.0711
	LL =	83.03		
	DW =	14.18		

Precast Cap (uniform Load):	
5.26	klf

Active Earth Pressure (not modeled in LARSA):	
34.27	k/ft

CHECK total of loads matches table below:	
DL	665
LL	692
DW	113

Transportation
Land Development
Environmental
Services

Computations

Vanasse Hangen Brustlin, Inc.

Project	Br. 93	Project #	57632.00
Location	Castleton, VT	Sheet	
Calculated By	EAF	Date	3/20/2014
Checked By	KBR	Date	4/22/14
Title	Abutment Design Loads		

Loads to Abutment (Strength)

SUMMARIZE DESIGN LOADS TO ABUTMENT CAPS: Abutment 1 Loads = Abutment 2 Loads

STRENGTH I:

Dead Loads to Abutment:					
Beam Self Wt. =	238.4	kips			
DL-Prec (DC) =	32.8	kips			
DL-Comp (DC) =	4.2	kips			
Curtain Wall =	36.4	kips			
Approach Slab =	64.9	kips			
Wingwall over Abutment =	8.5	kips			
Wingwalls =	68.5	kips			
Precast Cap =	210.4	kips			
TOTAL DEAD LOAD =	**664.1**	**kips**	**Dead Load =**	**18.05**	**klf**
Live Loads to Abutment:					
Truck on Bridge =	671.6	kips	(for 2 lanes)		
On Approach Slab =	20.615	kips			
TOTAL LIVE LOAD =	**692.22**	**kips**	**Live Load =**	**18.81**	**klf**
DW to Abutment:					
DL-Comp (DW) =	92.9	kips			
DW Approach Slab=	20.52	kips			
TOTAL DW =	**113.4**	**kips**	**DW =**	**3.08**	**klf**

Reference LARSA model for moments & shears: 57632.00\tech\Bridge\Substructure

Strength I

$M_{max\ pos}$ =	122.95	ft-kips
$M_{max\ neg}$ =	-383.23	ft-kips
V_{max} =	216.83	kips

Transportation
Land Development
Environmental
Services

Computations

Vanasse Hangen Brustlin, Inc.

Project	Br. 93	Project #	57632.00
Location	Castleton, VT	Sheet	
Calculated By	EAF	Date	3/20/2014
Checked By	KBR	Date	4/22/14
Title	Abutment Design Loads		

Loads to Abutment (Service)

[ ] = Input in Shaded Cells

Width of Bridge =	35.000	ft
Weight of Concrete =	150	lb/ft^3
CL Brg. To CL Brg. =	67.3	ft
Width of Bridge along Skew =	36.8012	ft
Spacing Between Piles =	6.5	ft

beams = 4

PILE CAP DESIGN LOADS:

Permanent Dead Loads on Pile Cap:

Length of Beams = 68.35 ft

Factors for Service Loads:

DC =	1.0
LL =	1.0
DW =	1.0

From Conspan (Service I with DF):

(Interior Beam)

Reactions (kips)	LT Support	RT Support
Self Wt. =	47.7	47.7
DL-Prec (DC) =	2.5	2.5
DL-Comp (DC) =	0.9	0.9
DL-Comp (DW) =	15.5	15.5
Live (w/ impact) =	100.0	100.0

(Exterior Beam)

Reactions (kips)	LT Support	RT Support
Self Wt. =	47.7	47.7
DL-Prec (DC) =	10.5	10.5
DL-Comp (DC) =	0.9	0.9
DL-Comp (DW) =	15.5	15.5
Live (w/ impact) =	91.9	91.9

Weight of Curtain Wall:

(See Shaded area in drawing to the right for XS area of curtain wall)

XS Area of "Curtain Wall" =	3.4167	ft^2
Width of Bridge =	36.801	ft
Curtain Wall Weight =	29.1	kips
Curtain Wall Wt. With Factor =	**29**	**kips**

Area between beam stem =	10.26	sf
Width over Abutment Cap =	1.667	ft

Approach Slab Loads: (Refer to Loads calculated for Geotech

Uniform Reaction to Bridge Seat =	1.59375	klf
Curb to Curb Length =	32.5953	ft

Abut. 1 = Abut. 2 =	**51.9**	**kips**	**per Abutment**
Abut. 1 with Factor =	**51.9**	**kips**	**per Abutment**

Approach Slab Live Load =	11.78	kips
Approach Slab LL with Factor =	**11.78**	**kips**

Wearing Surface over Approach Slab = 3" Thickness

Wearing Surface Weight =	13.68	kips	per Abutment
Wearing Surface with Factor =	**13.7**	**kips**	

Active Earth Pressure:

From hand calculations: **2.77** **k/ft**

Transportation
Land Development
Environmental
Services

Computations

Vanasse Hangen Brustlin, Inc.

Project	Br. 93	Project #	57632.00
Location	Castleton, VT	Sheet	
Calculated By	EAF	Date	3/20/2014
Checked By	KBR	Date	4/22/14
Title	Abutment Design Loads		

Loads to Abutment (Service)

Wingwall Loads:

Wingwalls will be "butterfly" wingwalls and will canitlever off of the abutment cap. Also include Cheek on abutment that are same height as curb

Cheek Walls:

Approx EL. WW3 =	413.54	Plan View Area =	13.0338	sf
Approx EL. WW4 =	413.83	Plan View Area =	13.0338	sf
Approx EL. of Abut Seat =	410.36			

Volume of Concrete:

WW3 =	41.45	cf
WW4 =	45.23	cf
Max =	45.23	cf

Weight of Concrete = 150 lb/cf

Weight of Wingwall over Abutment = 7 kips per abutment

Cheek Wall with Factor = 6.78 kips

Butterfly Wingwalls Approx Bottom of Abutment El = 401.5

WW3:

Plan View Area =	15.37	sf			
Approx Height =	12.04	ft			
Weight WW3 =	28	kip	**with LF =**	**28**	**kips**
			Include Cheek Wall over abutment:	**31.14**	**kips**

WW4:

Plan View Area =	14.63	sf			
Approx Height =	12.33	ft			
Weight WW4 =	27	kip	**with LF =**	**27**	**kips**
			Include Cheek wall over abutment:	**30.46**	**kips**

Precast Cap Weight:

Calculate volume of blockouts for piles:

Plan View Area =	6.25	sf
Depth =	3.5	ft
Volume of Blockout =	**21.875**	**cf**

22'-2" Lighter Abutment Cap Piece:

Plan View area of Cap =	76.9257	sf
Depth of Cap =	8.86	ft
Volume =	**681.561702**	**cf**

There are 3 blockouts for the 22'-2" Abutment Cap Piece which give conc. Volume of: 615.94 cf

Wt. of 14'-9" Concrete Cap = 92.39 kips

Including Load Factor = 92.39 kips

22'-2" Heavier Abutment Cap Piece:

Plan View area of Cap =	78.2526	sf
Depth of Cap =	8.86	ft
Volume =	**693.318036**	**cf**

There are 3 blockouts for the 22'-2" Abutment Cap Piece which give conc. Volume of: 627.69 cf

Wt. of 14'-9" Concrete Cap = 94.15 kips

Including Load Factor = 94.15 kips

Include as a uniform load across whole 44'-4" beam = 4.21 klf

Transportation
Land Development
Environmental
Services

VHB *Vanasse Hangen Brustlin, Inc.*

Computations

Project	Br. 93	Project #	57632.00
Location	Castleton, VT	Sheet	
Calculated By	EAF	Date	3/20/2014
Checked By	KBR	Date	4/22/14
Title	Abutment Design Loads		

Loads to Abutment (Service)

DESIGN LOADS TO ABUTMENT CAPS at Beam Stem locations:

Abutment 1 Loads = Abutment 2 Loads

Wingwall over Abutment and Wingwall Loads =			What kind of Load?	From Which Pile	Distance:
WW3 Side =	31.1	kips	Point Load	0	2.0515
WW4 Side =	31.1	kips	Point Load	6	4.2459

Beam 1:

Dead Loads per beam:

Beam Self Wt. =	47.7	kips			
DL-Prec (DC) =	10.5	kips			
DL-Comp (DC) =	0.9	kips			
Curtain Wall =	7.3	kips			
Approach Slab =	13.0	kips			
TOTAL =	79.3	kips			
Dead load per web:	**39.66**	**kips**	Point	0	5.4918
Dead load per web:	**39.66**	**kips**	Point	1	4.8308

Live Loads per beam :

Truck on Bridge =	91.90	kips			
On Approach Slab =	2.95	kips			
TOTAL =	94.85	kips			
Live load per web:	**47.42**	**kips**	Point	0	5.4918
Live load per web:	**47.42**	**kips**	Point	1	4.8308

DW per beam :

DL-Comp (DW) =	15.48	kips			
DW Approach Slab =	3.42	kips			
TOTAL =	18.90	kips			
DW per web:	**9.45**	**kips**	Point	0	5.4918
DW per web:	**9.45**	**kips**	Point	1	4.8308

Beam 2:

Dead Loads per beam:

Beam Self Wt. =	47.7	kips			
DL-Prec (DC) =	2.5	kips			
DL-Comp (DC) =	0.9	kips			
Curtain Wall =	7.3	kips			
Approach Slab =	13.0	kips			
TOTAL =	71.3	kips			
Dead load per web:	**35.66**	**kips**	Point	2	2.4819
Dead load per web:	**35.66**	**kips**	Point	3	1.2392

Live Loads per beam :

Truck on Bridge =	100.00	kips			
On Approach Slab =	2.95	kips			
TOTAL =	102.95	kips			
Live load per web:	**51.47**	**kips**	Point	2	2.4819
Live load per web:	**51.47**	**kips**	Point	3	1.2392

DW per beam :

DL-Comp (DW) =	15.48	kips			
DW Approach Slab =	3.42	kips			
TOTAL =	18.90	kips			
DW per web:	**9.45**	**kips**	Point	2	2.4819
DW per web:	**9.45**	**kips**	Point	3	1.2392

Transportation
Land Development
Environmental
Services

Computations

Vanasse Hangen Brustlin, Inc.

Project	Br. 93	Project #	57632.00
Location	Castleton, VT	Sheet	
Calculated By	EAF	Date	3/20/2014
Checked By	KBR	Date	4/22/14
Title	Abutment Design Loads		

Loads to Abutment (Service)

Beam 3:

Dead Loads per beam:

Beam Self Wt. =	47.7	kips			
DL-Prec (DC) =	2.5	kips			
DL-Comp (DC) =	0.9	kips			
Curtain Wall =	7.3	kips			
Approach Slab =	13.0	kips			
TOTAL =	71.3	kips			
Dead load per web:	**35.66**	**kips**	Point	3	5.2549
Dead load per web:	**35.66**	**kips**	Point	4	4.0123

Live Loads per beam :

Truck on Bridge =	100.00	kips			
On Approach Slab =	2.95	kips			
TOTAL =	102.95	kips			
Live load per web:	**51.47**	**kips**	Point	3	5.2549
Live load per web:	**51.47**	**kips**	Point	4	4.0123

DW per beam :

DL-Comp (DW) =	15.48	kips			
DW Approach Slab =	3.42	kips			
TOTAL =	18.90	kips			
DW per web:	**9.45**	**kips**	Point	3	5.2549
DW per web:	**9.45**	**kips**	Point	4	4.0123

Beam 4:

Dead Loads per beam:

Beam Self Wt. =	47.7	kips			
DL-Prec (DC) =	10.5	kips			
DL-Comp (DC) =	0.9	kips			
Curtain Wall =	7.3	kips			
Approach Slab =	13.0	kips			
TOTAL =	79.3	kips			
Dead load per web:	**39.66**	**kips**	Point	5	1.6633
Dead load per web:	**39.66**	**kips**	Point	6	0.4206

Live Loads per beam :

Truck on Bridge =	91.90	kips			
On Approach Slab =	2.95	kips			
TOTAL =	94.85	kips			
Live load per web:	**47.42**	**kips**	Point	5	1.6633
Live load per web:	**47.42**	**kips**	Point	6	0.4206

DW per beam :

DL-Comp (DW) =	15.48	kips			
DW Approach Slab =	3.42	kips			
TOTAL =	18.90	kips			
DW per web:	**9.45**	**kips**	Point	5	1.6633
DW per web:	**9.45**	**kips**	Point	6	0.4206

Transportation
Land Development
Environmental
Services

Computations

Vanasse Hangen Brustlin, Inc.

Project	Br. 93	Project #	57632.00
Location	Castleton, VT	Sheet	
Calculated By	EAF	Date	3/20/2014
Checked By	KBR	Date	4/22/14
Title	Abutment Design Loads		

Loads to Abutment (Service)

SUMMARIZE DESIGN LOADS TO ABUTMENT CAPS to put into LARSA:

Abutment 1 Loads = Abutment 2 Loads

Cheek & Wingwalls:		Load (kips)	On Member:	Start Position
	WW3 DL =	31	1	0.3466
	WW4 DL =	31	7	0.7174

Beam 1:		Load (kips)	On Member:	Location (ft)
Beam 1A	DL =	39.66	1	0.9279
	LL =	47.42		
	DW =	9.45		
Beam 1B	DL =	39.66	2	0.7432
	LL =	47.42		
	DW =	9.45		

Beam 2:		Load (kips)	On Member:	Location (ft)
Beam 2A	DL =	35.66	3	0.3818
	LL =	51.47		
	DW =	9.45		
Beam 2B	DL =	35.66	4	0.1906
	LL =	51.47		
	DW =	9.45		

Beam 3:		Load (kips)	On Member:	Location (ft)
Beam 3A	DL =	35.66	4	0.8084
	LL =	51.47		
	DW =	9.45		
Beam 3B	DL =	35.66	5	0.6173
	LL =	51.47		
	DW =	9.45		

Beam 4:		Load (kips)	On Member:	Location (ft)
Beam 4A	DL =	39.66	6	0.2559
	LL =	47.42		
	DW =	9.45		
Beam 4B	DL =	39.66	7	0.0711
	LL =	47.42		
	DW =	9.45		

Precast Cap (uniform Load):	
4.21	klf

Active Earth Pressure (not modeled in LARSA):	
2.77	k/ft

CHECK total of loads matches table below:	
DL	532
LL	396
DW	76

Transportation
Land Development
Environmental
Services

Computations

Vanasse Hangen Brustlin, Inc.

Project	Br. 93	Project #	57632.00
Location	Castleton, VT	Sheet	
Calculated By	EAF	Date	3/20/2014
Checked By	KBR	Date	4/22/14
Title	Abutment Design Loads		

Loads to Abutment (Service)

SUMMARIZE DESIGN LOADS TO ABUTMENT CAPS: Abutment 1 Loads = Abutment 2 Loads

SERVICE I:

Dead Loads to Abutment:					
Beam Self Wt. =	190.8	kips			
DL-Prec (DC) =	26.0	kips			
DL-Comp (DC) =	3.4	kips			
Curtain Wall =	29.1	kips			
Approach Slab =	51.9	kips			
Wingwall over Abutment =	6.8	kips			
Wingwalls =	54.8	kips			
Precast Cap =	168.3	kips			
TOTAL DEAD LOAD =	**531.2**	**kips**	**Dead Load =**	**14.43**	**klf**
Live Loads to Abutment:					
Truck on Bridge =	383.8	kips	(for 2 lanes)		
On Approach Slab =	11.78	kips			
TOTAL LIVE LOAD =	**395.58**	**kips**	**Live Load =**	**10.75**	**klf**
DW to Abutment:					
DL-Comp (DW) =	61.9	kips			
DW Approach Slab=	13.68	kips			
TOTAL DW =	**75.6**	**kips**	**DW =**	**2.05**	**klf**

Reference LARSA model for moments & shears: 57632.00\tech\Bridge\Substructure

Service I

$M_{max\ pos}$ =	83.81	ft-kips
$M_{max\ neg}$ =	-296.67	ft-kips
V_{max} =	152.37	kips

Transportation
Land Development
Environmental
Services

Computations

Vanasse Hangen Brustlin, Inc.

Project	Br. 93	Project #	57632.00
Location	Castleton, VT	Sheet	
Calculated By	EAF	Date	4/18/2014
Checked By	KBR	Date	4/22/14
Title	Abutment Reinforcement		

Abutment Reinforcement (Abut. 1 = Abut. 2)

SUMMARY

(3" clear unless otherwise specified)

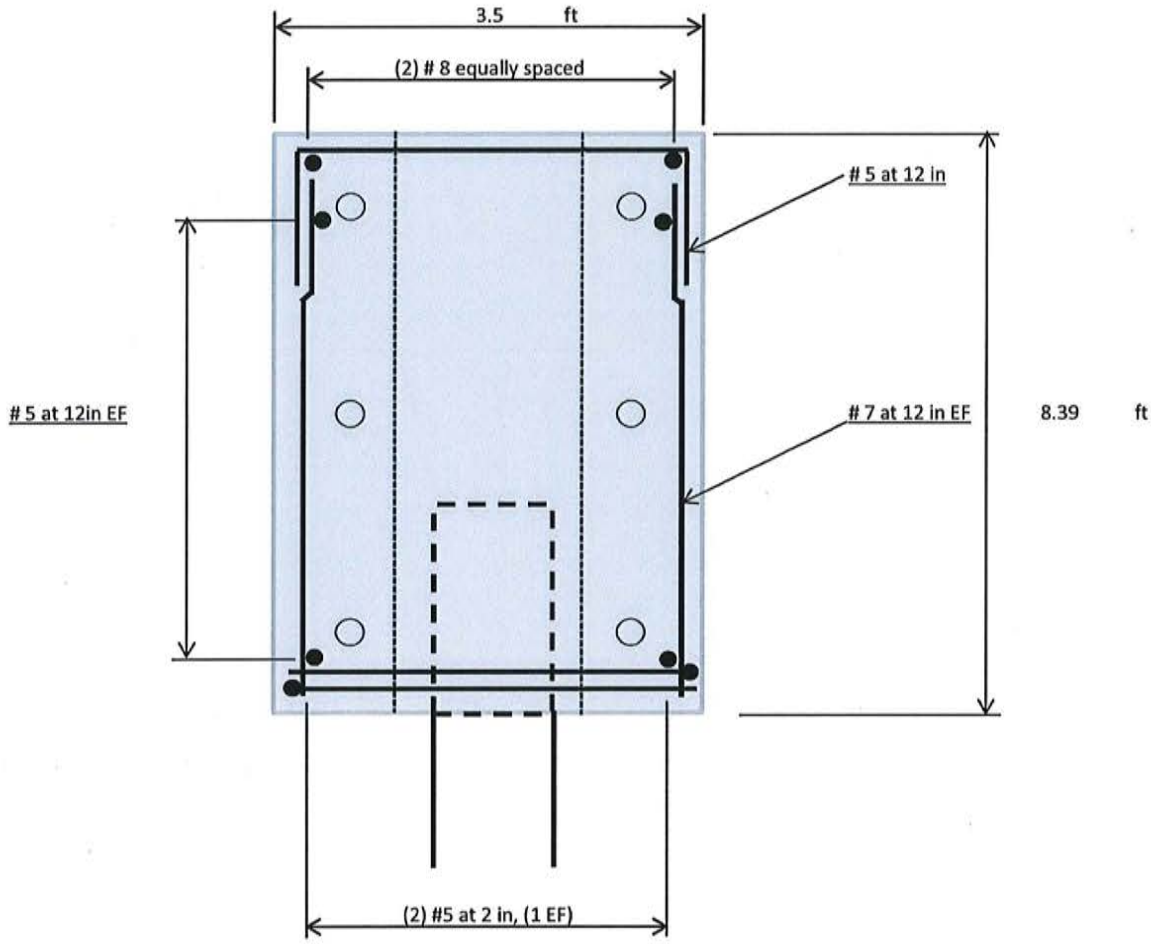

Transportation
Land Development
Environmental
Services

Computations

Vanasse Hangen Brustlin, Inc.

Project	Br. 93	Project #	57632.00
Location	Castleton, VT	Sheet	
Calculated By	EAF	Date	4/18/2014
Checked By	KBR	Date	4/22/14
Title	Abutment Reinforcement		

Abutment Reinforcement (Abut. 1 = Abut. 2)

= Input in Shaded Cells

Width of Bridge =	35.000	ft	Width of Cap =	3.5	ft
Weight of Concrete =	150	lb/ft^3	Depth of Cap =	8.39	ft
CL Brg. To CL Brg. =	67.3	ft			
Width of Bridge along Skew =	36.8012	ft			

Load Combination	Design Positive Bending Moment (k-ft)	Design Negative Bending Moment (k-ft)	Design Shear (k)
Service	83.81	296.67	152.37
Strength I	122.95	383.23	216.83

DESIGN POSITIVE MOMENT REINFORCEMENT (Strength I):

Depth of cap: d =	100.68	in
Width of cap: b=	42	in
cover =	3	in
f_s =	60	ksi
f'_c =	5	ksi
Φf =	0.9	(5.5.4.2.1)

d_s =	97.4	in
E_s =	29000	ksi

$$d_s = d - cover - \frac{d_b}{2}$$ (5.7.3.2)

# Stirrup Bar =	5	
Stirrup Diameter =	0.625	

Bar size =	**5**		
# of bars =	**2**		1 EF
A_s =	0.31	in^2	
d_b =	0.625		
Approx spacing =	36.000	in	(not spaced equally)
A_s provided=	0.62	in^2	

Flexural Resistance:

$$M_r = \emptyset M_n = A_s f_s \left(d_s - \frac{a}{2}\right)$$ (5.7.3.2.2-1)

$$a = \frac{A_s f_s}{0.85 f'_c b}$$ (5.7.3.1.1-4)

a =	0.21	in^2
M_n =	3618	k-in
M_r =	3256	k-in
M_r =	271	k-ft
M_u =	123	k-ft

Check that $M_u < M_r$: OK

Transportation
Land Development
Environmental
Services

VHB *Vanasse Hangen Brustlin, Inc.*

Computations

Project	Br. 93	Project #	57632.00
Location	Castleton, VT	Sheet	
Calculated By	EAF	Date	4/18/2014
Checked By	KBR	Date	4/22/14
Title	Abutment Reinforcement		

Abutment Reinforcement (Abut. 1 = Abut. 2)

Crack Control (5.7.3.4):

The spacing of mild steel reinforcement in the layer closest to the tension face shall satisfy the following:

$$s \le \frac{700\gamma_e}{\beta_s f_{ss}} - 2d_c$$

where: $\beta_s = 1 + \frac{d_c}{0.7(h - d_c)}$

where: $d_c =$ 3.3125 in
$h =$ 100.68 in

$\beta_s =$ 1.05

$$f_{ss} = \frac{M_{ser}}{A_s j d_s}$$

where: $j = 1 - k/3$

where: $k = \sqrt{n^2\rho^2 + 2n\rho} - n\rho$

where: $n = \frac{E_s}{E_c}$

where: $E_c = 1{,}820\sqrt{f'_c}$

$E_c =$ 4069.64 ksi

$n =$ 7.13

$\rho = \frac{A_s}{d_s b}$ $\rho =$ 0.00015

$k =$ 0.045

$j =$ 0.9849

$f_{ss} =$ 16.92 ksi

$\gamma_e =$ 0.75 (5.7.3.4-1) 0.75 for Class 2 exposure condition (conservative)

Check the spacing: $s \le \frac{700\gamma_e}{\beta_s f_{ss}} - 2d_c$ $s \le$ 22.97 NO GOOD

OK because due to configuration, this check is not applicable

Minimum Reinforcing Requirements (LRFD 5.7.3.3):

The amount of reinforcement shall be adequate to develop a factored flexural resistance, M_r, at least equal to the lesser of:

$1.33M_r$ **OR** $M_{cr} = \gamma_3\left[(\gamma_1 f_r + \cancel{\gamma_2 f_{pe}})S_c - \cancel{M_{dnc}}\left(\frac{S_c}{S_{nc}} - 1\right)\right]$

(0 - for prestressed)

where:

for Cracking: $f_r = 0.2\sqrt{f'_c}$ (5.4.2.6)

$f_r =$ 0.447 ksi

$\gamma_1 =$ 1.2 for precast (5.7.3.3.2)

$\gamma_3 =$ 0.67 for A615, Grade 60 reinforcement

$S_c = \frac{b * d^2}{6}$

$S_c =$ 70955.2368 in^3

$M_{cr} = \gamma_3[(\gamma_1 f_r)S_c]$ $M_{cr} =$ 2126.05 kip-ft

$1.33 * M_{str} =$ $1.33 * M_r =$ 163.52 kip-ft

The lesser of $1.33M_r$ and $M_{cr} =$ 163.52 kip-ft

Check that $M_r >$ the lesser of $1.33M_{str}$ and M_{cr}: OK

FOR POSITIVE MOMENT USE: 2.00 ea (1 EF) Bar #: 5

Transportation
Land Development
Environmental
Services

Computations

Vanasse Hangen Brustlin, Inc.

Project	Br. 93	Project #	57632.00
Location	Castleton, VT	Sheet	
Calculated By	EAF	Date	4/18/2014
Checked By	KBR	Date	4/22/14
Title	Abutment Reinforcement		

Abutment Reinforcement (Abut. 1 = Abut. 2)

DESIGN NEGATIVE MOMENT REINFORCEMENT (Strength I):

Depth of cap: d =	100.68	in
Width of cap: b=	42	in
cover =	3	in
f_s =	60	ksi
f'_c =	5	ksi
Φf =	0.9	(5.5.4.2.1)

d_s =	96.6	in
E_s =	29000	ksi

$$d_s = d - cover - \frac{d_b}{2} \qquad (5.7.3.2)$$

# Stirrup Bar =	5	
Stirrup Diameter =	0.625	
Bar size =	**8**	
# of bars =	**2**	
A_s =	0.79	in^2
d_b =	1	
Approx spacing =	36.000	in (if equally spaced)
A_s provided=	1.58	in^2

Flexural Resistance:

$$M_r = \emptyset M_n = A_s f_s \left(d_s - \frac{a}{2}\right) \qquad (5.7.3.2.2\text{-}1)$$

$$a = \frac{A_s f_s}{0.85 f'_c b} \qquad (5.7.3.1.1\text{-}4)$$

a =	0.53	in^2
M_n =	9128	k-in
M_r =	8215	k-in
M_r =	685	k-ft
M_u =	383	k-ft

Check that $M_u < M_r$: OK

Crack Control (5.7.3.4):

The spacing of mild steel reinforcement in the layer closest to the tension face shall satisfy the following:

$$s \le \frac{700\gamma_e}{\beta_s f_{ss}} - 2d_c$$

where: $\beta_s = 1 + \frac{d_c}{0.7(h - d_c)}$

where:

d_c =	4.13	in
h =	100.68	in

β_s = 1.06

Transportation
Land Development
Environmental
Services

Computations

Vanasse Hangen Brustlin, Inc.

Project	Br. 93	Project #	57632.00
Location	Castleton, VT	Sheet	
Calculated By	EAF	Date	4/18/2014
Checked By	KBR	Date	4/22/14
Title	Abutment Reinforcement		

Abutment Reinforcement (Abut. 1 = Abut. 2)

$$f_{ss} = \frac{M_{ser}}{A_s j d_s}$$

where: $j = 1 - {}^{k}/_{3}$

where: $k = \sqrt{n^2\rho^2 + 2n\rho} - n\rho$

where: $n = \frac{E_s}{E_c}$

where: $E_c = 1{,}820\sqrt{f'_c}$

$E_c =$ 4069.64 ksi

$n =$ 7.13

$$\rho = \frac{A_s}{d_s b}$$

$\rho =$ 0.00039

$k =$ 0.072

$j =$ 0.9761

$f_{ss} =$ 23.91 ksi

$\gamma_e =$ 0.75 (5.7.3.4-1) 0.75 for Class 2 exposure condition

Check the spacing:

$$s \le \frac{700\gamma_e}{\beta_s f_{ss}} - 2d_c$$

$s \le$ 12.45

NO GOOD

OK because due to configuration, this check is not applicable

Minimum Reinforcing Requirements (LRFD 5.7.3.3):

The amount of reinforcement shall be adequate to develop a factored flexural resistance, M_r, at least equal to the lesser of:

$1.33M_r$ **OR** $M_{cr} = \gamma_3\left[(\gamma_1 f_r + \cancel{\gamma_2 f_{pe}})S_c - \cancel{M_{dnc}}\left(\frac{S_c}{S_{nc}} - 1\right)\right]$ (0 - for prestressed)

where:

for Cracking: $f_r = 0.2\sqrt{f'_c}$ (5.4.2.6)

$f_r =$ 0.447 ksi

$\gamma_1 =$ 1.2 for precast (5.7.3.3.2)

$\gamma_3 =$ 0.67 for A615, Grade 60 reinforcement

$$S_c = \frac{b * d^2}{6}$$

$S_c =$ 70955.2368 in^3

$M_{cr} = \gamma_3[(\gamma_1 f_r)S_c]$

$M_{cr} =$ 2126.05 kip-ft

$1.33 * M_{str} =$

$1.33 * M_r =$ 509.70 kip-ft

The lesser of $1.33M_r$ and M_{cr} = 509.70 kip-ft

Check that M_r > the lesser of $1.33M_{str}$ and M_{cr}: OK

FOR NEGATIVE MOMENT: 2.00 ea (1 EF) Bar #: 8

Transportation
Land Development
Environmental
Services

Computations

Vanasse Hangen Brustlin, Inc.

Project	Br. 93	Project #	57632.00
Location	Castleton, VT	Sheet	
Calculated By	EAF	Date	4/18/2014
Checked By	KBR	Date	4/22/14
Title	Abutment Reinforcement		

Abutment Reinforcement (Abut. 1 = Abut. 2)

SHEAR REINFORCEMENT (Strength I) (LRFD 5.8.3.3):

V_n shall be the lesser of:

$$V_{n1} = V_c + V_s + V_p \quad \text{or} \quad V_{n2} = 0.25 f'_c b_v d_v + V_p$$

where: $V_c = 0.0316\beta\sqrt{f'_c}\, b_v d_v$ (for when the procedures of Articles 5.8.3.4.1 or 5.8.3.4.2

$V_c = the\ lesser\ of\ V_{ci}\ and\ V_{cw}$ (for when the procedures of Article 5.8.3.4.3 are used)

where:

d_v shall be taken as the greatest of (5.8.2.9):

$$d_{v1} = 0.9 d_e \ or\ d_{v2} = 0.72h \text{ or } d_{v3} = d_e - {}^{a}/_{2}$$

where: $$d_e = \frac{A_{ps} f_{ps} d_p + A_s f_y d_s}{A_{ps} f_{ps} + A_s f_y}$$

d_{v1} =	86.90	in
d_{v2} =	72.49	in
d_{v3} =	96.29	in
max d_v =	**96.29**	**in**
β =	**2.00**	

Solve:

$V_c = 0.0316\beta\sqrt{f'_c}\, b_v d_v$ — V_c = **571.52** **kip**

$V_{n1} = V_c + V_s + V_p$ — $V_{n1} = V_c (+ V_s)$ = **571.52** **kip** *** (doesn't include Vs)

$V_{n2} = 0.25 f'_c b_v d_v + V_p$ — V_{n2} = **5055.20** **kip**

$V_r = \phi V_n$ where ϕ=0.90 — V_r = **783.01** **kip** *** Vc + Vs

Check that $V_r > V_{str}$: 783.01 vs. 216.83 **OK**

The maximum factored design shear force is: 216.83 kips

For Transverse Reinforcing:

Minimum shear reinforcement required: $V_r = \phi V_n$ (5.8.2.1-2)

V_u =	216.8	kips
$0.5\Phi V_c$ =	257.2	kips

STIRRUPS NOT REQUIRED

Stirrups Calculation:

$$V_s = \frac{A_v f_y d_v \cot\theta}{s}$$ (C5.8.3.3-1)

f_y =	60	ksi
# of stirrup legs =	2	
stirrup bar size =	5	
Spacing =	12	in
A_v =	0.62	in^2
θ =	45	degrees
V_s =	**298.50**	**kips**

New: **$V_{n1} = V_c + V_s$ = 870.02 kip** *** (includes Vs)

Minimum Transverse Reinforcement (5.8.2.5):

$$A_v \geq 0.0316\sqrt{f'_c}\,\frac{b_v s}{f_y}$$ A_v = 0.59 in^2

A_v provided = 0.62 in^2 **OK**

Transportation
Land Development
Environmental
Services

VHB Vanasse Hangen Brustlin, Inc.

Computations

Project	Br. 93	Project #	57632.00
Location	Castleton, VT	Sheet	
Calculated By	EAF	Date	4/18/2014
Checked By	KBR	Date	4/22/14
Title	Abutment Reinforcement		

Abutment Reinforcement (Abut. 1 = Abut. 2)

Maximum Transverse Reinforcement Spacing (5.8.2.7):

$$v_u = \frac{|V_u|}{\phi b_v d_v}$$

V_u =	383.23	kips	
b_v =	42	in	
d_v =	96.29	in	
ϕ =	0.9		
v_u =	0.105	ksi	(Eq. 5.8.2.9-1)

If $v_u < 0.125f'_c$, then $s_{max} = 0.8d_v \leq 24.0$ in (5.8.2.7-1)
If $v_u \geq 0.125f'_c$, then $s_{max} = 0.4d_v \leq 12.0$ in (5.8.2.7-2)

0.125f'c = 0.625 ksi v_u < 0.125f'c

s_{max} = 24.00

FOR SHEAR REINFORCMENT: 12.00 in spacing Bar #: 5

SHRINKAGE AND TEMPERATURE REINFORCEMENT (5.10.8)

$$A_s \geq \frac{1.30bh}{2(b+h)f_y} \text{ where } 0.11 \leq A_s \leq 0.60$$

A_s = area of reinforcement in each direction and each face (in.^{2}/ft)

b =	42	in
h =	100.68	in
f_y =	60	ksi
A_s min =	0.321	in

T & S Use 7 **spaced at** 12.00 **in** **0.60** **in^2** OK

FOR SHRINKAGE AND TEMP.: 12.00 in spacing Bar #: 7

SKIN STEEL (5.7.3.4)

For members exceeding 3' deep, longitudinal skin reinforcement shall be uniformly distributed along both side faces of the component for a distance $d_l/2$ nearest the flexural tension reinforcement.

$$A_{sk} \geq 0.012(d_l - 30) \leq \frac{A_s + A_{ps}}{4} \qquad (5.7.3.4\text{-}2)$$

d_l =	97.4	in
A_s =	1.58	in^2
A_{sk} =	0.81	in^2/ft
$A_s/4$ =	0.40	in^2

Distance from the extreme compression fiber to the centroid of extreme tension steel element area of tensile reinforcement:

Bar Size = 7 Spacing = 12.00 in

A_{sk} = 0.60 in^2/ft > 0.40 OK

FOR SKIN STEEL.: 12.00 in spacing Bar #: 7

Transportation
Land Development
Environmental
Services

VHB Vanasse Hangen Brustlin, Inc.

Computations

Project	Br. 93	Project #	57632.00
Location	Castleton, VT	Sheet	
Calculated By	EAF	Date	4/18/2014
Checked By	KBR	Date	4/22/14
Title	Abutment Reinforcement		

Abutment Reinforcement (Abut. 1 = Abut. 2)

PASSIVE EARTH PRESSURE:

w_p = 34.27 k/ft from Hand Calc

Load factor for passive earth pressure (3.4.1-2): φ = 1.50

$$w_u = \varphi_{EH} w_p$$

w_u = 51.405 k/ft

Abutment cap acts as a continuous horizontal beam supported on five (5) piles with spans equal to the pile spacing along the skew.

$$M_{u(pos)} = 0.077 * wl^2 \qquad M_{u(neg)} = 0.107 * wl^2$$

where: l = 6.5 ft

M_u = **232.39** **kip-ft/ft**

Calc. Nominal Flexural Resistance, M_r (5.7.3.2.1):

$$M_r = \emptyset M_n = A_s f_s \left(d_s - \frac{a}{2}\right)$$

$$a = \frac{A_s f_s}{0.85 f'_c b}$$

A_s =	0.60	in^2 per foot	
A_s provided =	5.03	in^2	
f_s =	60	ksi	
f'_c =	5	ksi	
b =	100.68	in	(height of cap for this case)

a = 0.71 in
d_s = 37.9375 in

M_n = **946.00** **k-ft/ft**

M_r = **851.40** **k-ft/ft**
M_u = **232.39** **kip-ft/ft**

Check that $M_r > M_u$: OK

Section 2.0

Wingwall & Cheekwall Design

VHB Computations

Project: Br #93 | Project # 57632.00
Location: Castleton, VT | Sheet of
Calculated by: EAF | Date:
Checked by: KBR | Date: 4/23/14
Title Abutment Wingwall Design

Abutment Wingwall Design:

- WW 1 & WW2 are similar.
- WW3
- WW4

- Loadings were computed using active earth pressure (VTrans Integral Abutment Manual 3.2.2.4 and 4.5.4)

- $f'_c = 5000$ psi

References:

- VTrans Structures Design Manual (2010)
- Integral Abutment Bridge Design Guidelines (2008)
- AASHTO LRFD Bridge Design Specifications (2012)

VHB *Computations*

Project: Br # 93 | Project # 57632.00
Location: Castleton, VT | Sheet of
Calculated by: EAF | Date:
Checked by: | Date:
Title

WW1 & WW2 GEOMETRY & WW4 *

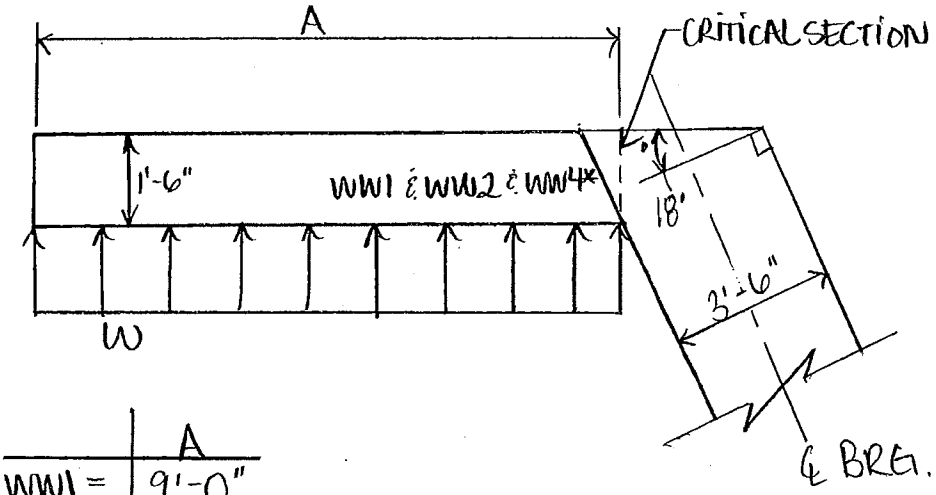

	A
WW1 =	9'-0"
WW2 =	9'-0"
WW4 =	10'-0"

* - WW4 is longer length

WW3 GEOMETRY

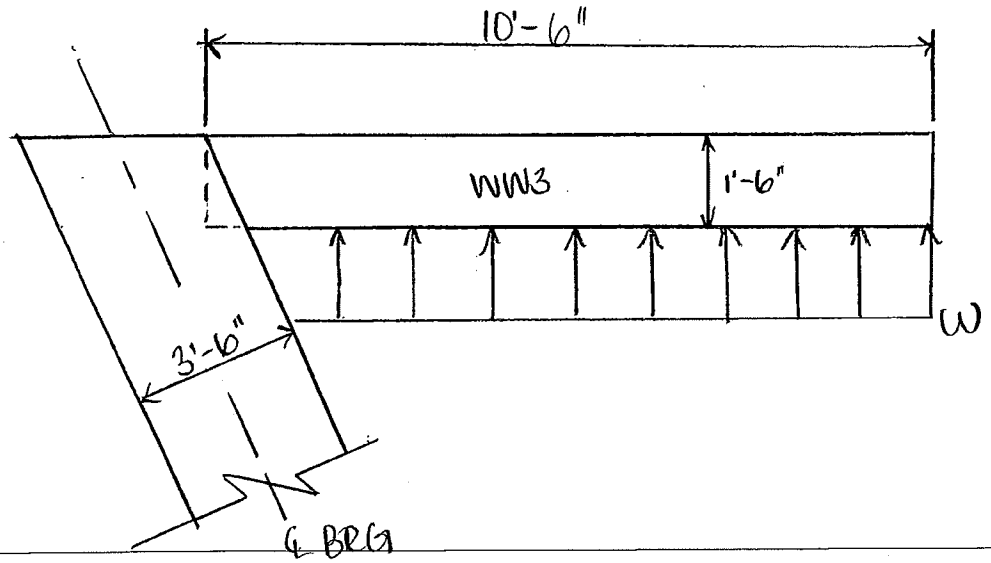

VHB *Computations*

Project: Br #93 | Project # 57632.00
Location: Castleton, VT | Sheet of
Calculated by: EAF | Date:
Checked by: | Date:
Title Abutment wingwall Design

WW1, WW2 & WW4

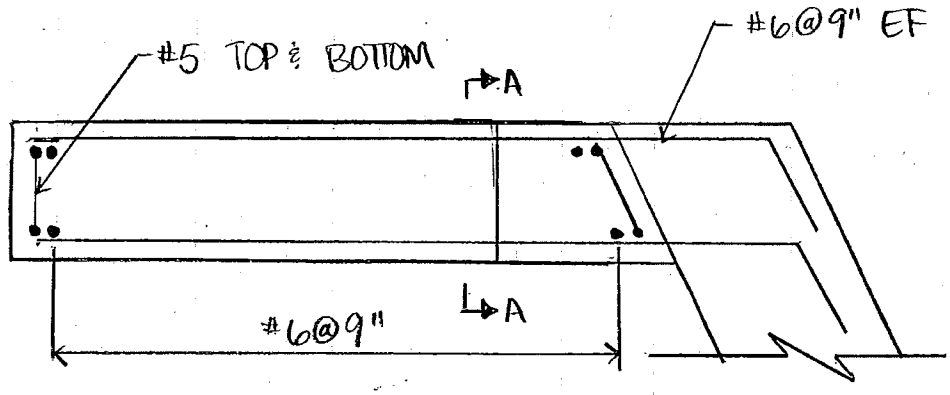

(3" CLEAR, UNLESS NOTED OTHERWISE)

SEE SECTION A-A NEXT PAGE.

WW3:

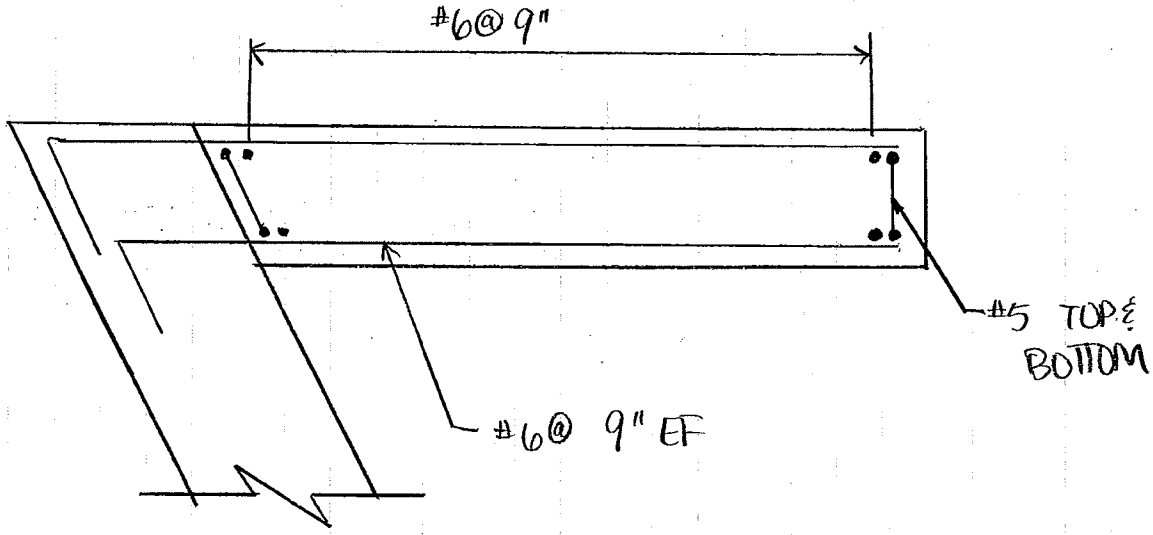

VHB *Computations*

Project: Br #93 | Project # 57632.00
Location: | Sheet of
Calculated by: EAF | Date:
Checked by: | Date:
Title Abutment Wingwall Design

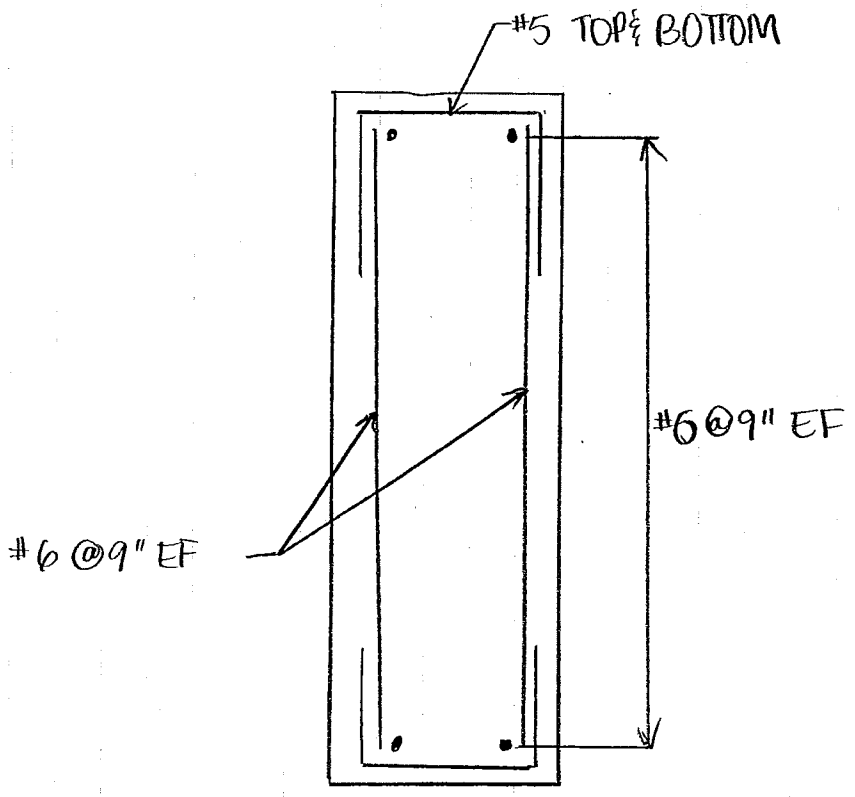

SECTION A-A

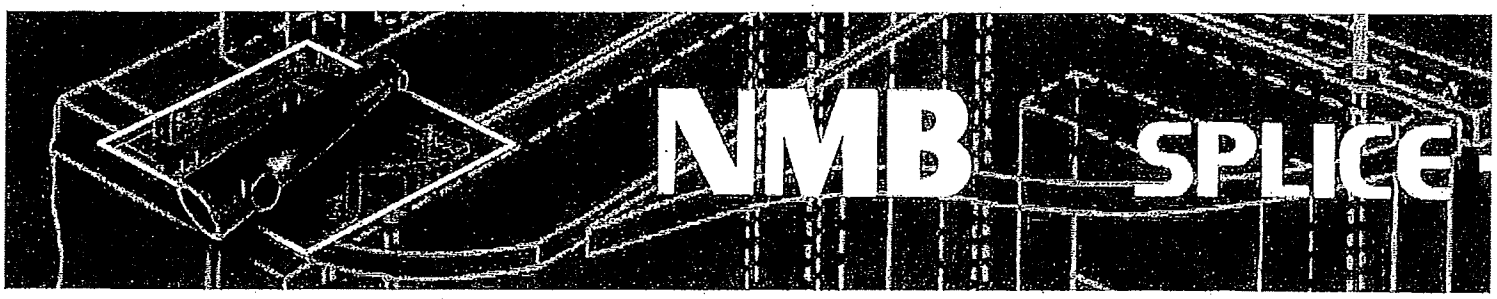

NMB SPLICE-SLEEVE

Steel Specification: The material properties of NMB SPLICE-SLEEVE conform to manufacturer's specification based on ASTM A536-85.

Grout Specification: The grout used in the NMB must be "SS Mortar". Minimum grout strength will be 6,500-psi for Type 1 (125%Fy) performance and 9,500-psi for Type 2 (150%Fy) performance.

Dimensions:

Dimensions of NMB Splice Sleeves											Recommended Rebar Embedment Length					
Sleeve No.	Bar Dia.	Bar Size		Sleeve Length (L) inch	Narrow End Diameter		Max. Dia. (B) inch	Wide End Diameter			Factory Dowel (E1) inch		Field Dowel (E2) inch			SS Mortar lbs. per Sleeve
		ASTM	Metric Canada		I.D. (C) inch	O.D. (C') inch		I.D. (A) inch	Total Tolerance inch	O.D. (A') inch						
											Minimum	Maximum	Minimum	Average	Maximum	
5U-X	0.625	#5	15MM	9.65	0.87	1.42	1.81	1.26	0.63	1.81	4.13	4.33	4.13	4.53	4.92	1.26
6U-X	0.750	#6	20MM	11.22	1.02	1.57	1.97	1.42	0.67	1.97	4.92	5.12	4.92	5.32	5.71	1.76
7U-X	0.875	#7		12.80	1.14	1.69	2.28	1.73	0.86	2.28	5.71	5.91	5.71	6.11	6.50	2.65
8U-X	1.000	#8	25MM	14.57	1.30	1.90	2.48	1.89	0.89	2.48	6.50	6.69	6.50	6.99	7.48	3.46
9U-X	1.128	#9	30MM	16.34	1.42	2.01	2.60	2.01	0.89	2.60	7.40	7.56	7.40	7.88	8.35	3.95
10U-X	1.270	#10		17.91	1.57	2.20	2.80	2.16	0.89	2.80	8.19	8.35	8.19	8.66	9.13	4.94
11U-X	1.410	#11	35MM	19.49	1.73	2.40	3.03	2.32	0.91	3.03	8.98	9.13	8.98	9.45	9.92	6.02
SNX-11	1.410	#11	35MM	19.09	1.69	2.52	3.03	2.32	0.91	3.03	8.86	9.25	8.27	8.86	9.45	5.71
A11W	1.410	#11	35MM	19.49	1.73	3.31	3.30	2.60	1.19	3.31	8.86	9.84	8.27	8.96	9.65	6.99
14U-X	1.693	#14	45MM	24.41	2.01	2.80	3.46	2.60	0.91	3.46	11.42	11.61	11.42	11.91	12.40	9.19
18U-X	2.257	#18	55MM	36.22	2.68	3.66	4.72	3.27	1.01	4.25	17.00	18.11	17.00	17.56	18.11	25.31

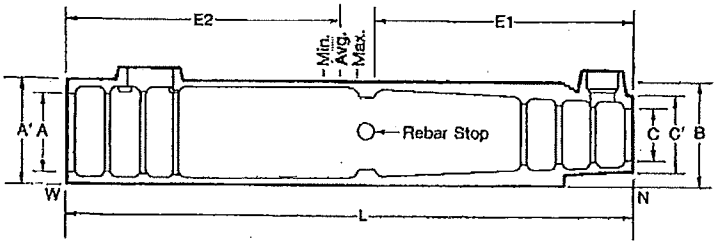

Transportation
Land Development
Environmental
Services

Computations

Vanasse Hangen Brustlin, Inc.

Project	Br. 93	Project #	57632.00
Location	Castleton, VT	Sheet	
Calculated By	EAF	Date	4/17/2014
Checked By	KBR	Date	4/23/14
Title	Abutment Wingwall Design		

Abutment Wingwall Design

[ ] = Input in Shaded Cells

f'_c =	5	ksi
γ_{conc} =	150	pcf
γ_{soil} =	140	pcf
ϕ_f =	34	degrees
Length of Wall =	10.50	ft
Thickness of Wall =	1.50	ft
f_y =	60	ksi

http://www.fhwa.dot.gov/bridge/lrfd/pscus71.htm

	Top EL.	Bottom EL.	Height	Length
WW1	411.47	399.5	11.97	9
WW2	410.98	399.5	11.48	9
WW3	413.54	401.5	12.04	10.5
WW4	413.81	401.5	12.31	10

WW1 and WW2 are the same, WW3 and WW4 are similar, design for longer length

Max height of Wingwalls = 12.31 ft

$$\rho = \frac{1}{2} k_a \gamma_s H^2$$

where:

$$k_a = \frac{sin^2(\theta + \phi'_f)}{\Gamma[sin^2\theta \sin(\theta - \delta)]} \quad (3.11.5.3\text{-}1)$$

where:

$$\Gamma = \left[1 + \sqrt{\frac{\sin\left(\phi'_f + \delta\right)\sin(\phi'_f - \beta)}{\sin(\theta - \delta)\sin(\theta + \beta)}}\right]^2 \quad (3.11.5.3\text{-}2)$$

where:

δ =	17	degrees	(Table 3.11.5.3-1)
β =	0	degrees	
θ =	90	degrees	
ϕ'_f =	34	degrees	

Γ = 2.80

k_a = 0.256

use k_a from geotechnical report= 0.28 for Granular Backfill for Structures

ρ = 2970.11 plf

Load Factor (3.4.1-2)

Active = 1.5

$$M = \frac{wl^2}{2}$$

where:

w = 2970.11 plf
l = 10.50 ft

M =	163.73	k-ft	(Service)
M_u =	245.59	k-ft	(Strength)

V_{max} = w*l

V_{max} =	31.19	kips	(Service)
V_u =	46.78	kips	(Strength)

Transportation
Land Development
Environmental
Services

Computations

Vanasse Hangen Brustlin, Inc.

Project	Br. 93	Project #	57632.00
Location	Castleton, VT	Sheet	
Calculated By	EAF	Date	4/17/2014
Checked By	RBR	Date	4/23/14
Title	Abutment Wingwall Design		

Abutment Wingwall Design

Section Properties:

Length of WW: b =	147.72	in
depth of WW d =	18	in
Concrete Cover =	3.905	in
Bar Size =	6	
# of Bars =	17	ea
Diameter Bar =	0.75	in
A_s =	0.44	in^2
Approx Spacing =	**8.74**	**in**
A_s provided =	7.48	in^2
d_s =	14.095	

for precast, includes splice sleeves (to centerline of bar)

Effective depth = width - cover - $d_b/2$

d_e = **14.10** **in**

Rectangular Comp Block: $a = \frac{A_s f_y}{0.85 f'_c b_w}$ a = 0.715 in^2

Flexural Resistance:

$$M_r = \emptyset M_n = A_s f_s \left(d_s - \frac{a}{2}\right)$$ (5.7.3.2.2-1)

a =	0.715	in^2
M_n =	6165	k-in
M_r =	5549	k-in
M_r =	462	k-ft
M_u =	246	k-ft

Check that $M_u < M_r$: OK

Crack Control (5.7.3.4):

The spacing of mild steel reinforcement in the layer closest to the tension face shall satisfy the following:

$$s \le \frac{700\gamma_e}{\beta_s f_{ss}} - 2d_c$$

where: $\beta_s = 1 + \frac{d_c}{0.7(h - d_c)}$

where: d_c = **3.91** **in**

h = **18.00** **in**

β_s = **1.40**

$$f_{ss} = \frac{M_{ser}}{A_s j d_s}$$

where: $j = 1 - k/3$

where: $k = \sqrt{n^2\rho^2 + 2n\rho} - n\rho$

where: $n = \frac{E_s}{E_c}$

where: $E_c = 1{,}820\sqrt{f'_c}$

E_c = **4069.64** **ksi**

n = **7.13**

Abutment Wingwall Design

$$\rho = \frac{A_s}{d_s b}$$

ρ = 0.00359

k = 0.202

j = 0.9326

f_{ss} = 19.98 ksi

γ_e = 0.75 (5.7.3.4-1) 0.75 for Class 2 exposure condition

Check the spacing: $s \le \frac{700\gamma_e}{\beta_s f_{ss}} - 2d_c$

s ≤ 11.01 OK

Minimum Reinforcing Requirements (LRFD 5.7.3.3):

The amount of reinforcement shall be adequate to develop a factored flexural resistance, M_r, at least equal to the lesser of:

$1.33M_r$ **OR** $M_{cr} = \gamma_3\left[(\gamma_1 f_r + \gamma_2 f_{pe})S_c - M_{dnc}\left(\frac{S_c}{S_{nc}} - 1\right)\right]$

(0 - for prestressed)

where:

for Cracking: $f_r = 0.2\sqrt{f'_c}$ (5.4.2.6)

f_r = 0.447 ksi

γ_1 = 1.2 for precast (5.7.3.3.2)

γ_3 = 0.67 for A615, Grade 60 reinforcement

$$S_c = \frac{b * d^2}{6}$$

S_c = 7977 in^3

$$M_{cr} = \gamma_3[(\gamma_1 f_r)S_c]$$

M_{cr} = 239.01 kip-ft

1.33 * M_{str} = 1.33 * M_{str} = 326.64 kip-ft

The lesser of 1.33M_r and M_{cr} = 239.01 kip-ft

Check that M_r > the lesser of 1.33M_{str} and M_{cr}: OK

Abutment Wingwall Design

Effective Shear Depth:

V_n shall be the lesser of: $V_{n1} = V_c + V_s + V_p$ or $V_{n2} = 0.25f'_c b_v d_v + V_p$

where: $V_c = 0.0316\beta\sqrt{f'_c}b_v d_v$ (for when the procedures of Articles 5.8.3.4.1 or 5.8.3.4.2

$V_c = the\ lesser\ of\ V_{ci}\ and\ V_{cw}$ (for when the procedures of Article 5.8.3.4.3 are used)

where:

d_v shall be taken as the greatest of (5.8.2.9):

$$d_{v1} = 0.9d_e\ or\ d_{v2} = 0.72h \text{ or } d_{v3} = d_e - {}^{a}/_{2}$$

where: $$d_e = \frac{A_{ps}f_{ps}d_p + A_s f_y d_s}{A_{ps}f_{ps} + A_s f_y}$$

d_{v1} =	12.686	in
d_{v2} =	12.960	in
d_{v3} =	13.738	in
max d_v =	**13.738**	**in**

β = **2.00** (5.8.3.4.1)

Solve: $V_c = 0.0316\beta\sqrt{f'_c}b_v d_v$ **V_c = 286.78 kip**

$V_{n1} = V_c + V_s + V_p$ **$V_{n1} = V_c$ = 286.78 kip** *** (doesn't include Vs)

$V_{n2} = 0.25f'_c b_v d_v + V_p$ **V_{n2} = 2536.64 kip**

$V_r = \phi V_n$ where ϕ=0.90 **V_r = 258.10 kip**

Check that $V_r > V_{str}$: 258.10 vs. 46.78 OK

FOR REINFORCING USE: 8.74 in spacing Bar #: 6

For Transverse Reinforcing:

Minimum shear reinforcement required: $V_r = \phi V_n$ (5.8.2.1-2)

V_u =	46.8	kips
$0.5\Phi V_c$ =	129.1	kips

STIRRUPS NOT REQUIRED

Transportation
Land Development
Environmental
Services

Computations

Vanasse Hangen Brustlin, Inc.

Project	Br. 93	Project #	57632.00
Location	Castleton, VT	Sheet	
Calculated By	EAF	Date	4/17/2014
Checked By	KJBR	Date	4/23/14
Title	Abutment Wingwall Design		

Abutment Wingwall Design

SHRINKAGE AND TEMPERATURE REINFORCEMENT (5.10.8)

$A_s \geq \frac{1.30bh}{2(b+h)f_y}$ where $0.11 \leq A_s \leq 0.60$

A_s = area of reinforcement in each direction and each fact (in.^{2}/ft)

b =	147.72	in
h =	18	in
f_y =	60	ksi
A_s min =	0.174	in

T & S Use 6 **spaced at** 8.744 in **0.60** in^2 OK

FOR SHRINKAGE AND TEMP.: 8.74 in spacing Bar #: 6

DESIGN STEEL IN THE BACK VERTICAL

ρ =	2.97	klf	
Location of resultant =	4.10	ft	
M =	**12.19**	**k-ft/ft**	(Service)

Section Properties:

Length of WW: b =	126.00	in	
depth of WW: d =	18.00	in	
Concrete Cover =	3	in	for precast
Bar Size =	6		
# of Bars =	14	ea	
Diameter Bar =	0.75	in	
A_s =	0.44	in^2	
Approx Spacing =	**9.23**	**in**	
A_s provided =	6.16	in^2	
d_s =	15		

Effective depth = width - cover - d_b/2

d_e = 14.63 in

Rectangular Comp Block: $a = \frac{A_s f_y}{0.85 f'_c b_w}$ a = 0.690 in^2

Flexural Resistance:

$M_r = \emptyset M_n = A_s f_s \left(d_s - \frac{a}{2}\right)$ (5.7.3.2.2-1)

a =	0.690	in^2
M_n =	5416	k-in
M_r =	4875	k-in
M_r =	406	k-ft
M_u =	128	k-ft

Check that $M_u < M_r$: OK

Abutment Wingwall Design

Crack Control (5.7.3.4):

The spacing of mild steel reinforcement in the layer closest to the tension face shall satisfy the following:

$$s \le \frac{700\gamma_e}{\beta_s f_{ss}} - 2d_c$$

where: $\beta_s = 1 + \frac{d_c}{0.7(h - d_c)}$

where: $d_c =$ 3.38 in

$h =$ 18.00 in

$\beta_s =$ 1.33

$$f_{ss} = \frac{M_{ser}}{A_s j d_s}$$

where: $j = 1 - k/3$

where: $k = \sqrt{n^2\rho^2 + 2n\rho} - n\rho$

where: $n = \frac{E_s}{E_c}$

where: $E_c = 1{,}820\sqrt{f'_c}$

$E_c =$ 4069.64 ksi

$n =$ 7.13

$\rho = \frac{A_s}{d_s b}$

$\rho =$ 0.00334

$k =$ 0.196

$j =$ 0.9348

$f_{ss} =$ 18.24 ksi

$\gamma_e =$ 0.75 (5.7.3.4-1) 0.75 for Class 2 exposure condition

Check the spacing: $s \le \frac{700\gamma_e}{\beta_s f_{ss}} - 2d_c$ $s \le$ 14.90 OK

Minimum Reinforcing Requirements (LRFD 5.7.3.3):

The amount of reinforcement shall be adequate to develop a factored flexural resistance, M_r, at least equal to the lesser of:

$1.33M_r$ **OR** $M_{cr} = \gamma_3\left[(\gamma_1 f_r + \cancel{\gamma_2 f_{pe}})S_c - \cancel{M_{dnc}}\left(\frac{S_c}{S_{nc}} - 1\right)\right]$

(0 - for prestressed)

where:

for Cracking: $f_r = 0.2\sqrt{f'_c}$ (5.4.2.6)

$f_r =$ 0.447 ksi

$\gamma_1 =$ 1.2 for precast (5.7.3.3.2)

$\gamma_3 =$ 0.67 for A615, Grade 60 reinforcement

$S_c = \frac{b * d^2}{6}$

$S_c =$ 6804 in^3

$M_{cr} = \gamma_3[(\gamma_1 f_r)S_c]$ $M_{cr} =$ 203.87 kip-ft

$1.33 * M_{str} =$ $1.33 * M_{str} =$ 326.64 kip-ft

The lesser of $1.33M_r$ and M_{cr} = 203.87 kip-ft

Check that M_r > the lesser of $1.33M_{str}$ and M_{cr}: OK

FOR BACK VERTICAL: 9.23 in spacing Bar #: 6

VHB *Computations*

Project: BRIDGE 93 | Project # 57632.00
Location: CASTLETON, VT | Sheet of
Calculated by: EAF | Date: 1/16/14
Checked by: | Date:
Title Wingwall Elevations

Point	Station	Offset	E.G. Elev	Elev @ Top of Wingwall (3" reveal)
1	65+97.97	16.0'	410.71	410.71 - 0.02(15.5') + 7/12" = 410.98
2	65+84.62	19.58'	410.02	410.02 - 0.02(15.5) + 7/12 - 0.06(3.5833) + 3" reveal = 410.33 OK✓
3	66+08.37	17.50'	411.20	411.20 - 0.02(15.5) + 7/12 = 411.47
4	65+97.35	19.58'	410.68	410.68 - 0.02(15.5) + 7/12 - 0.06(3.5833) + 3" Reveal = 410.99 OK✓
5	66+65.44	16.0'	413.27	413.27 - 0.02(15.5) + 7/12 = 413.54
6	66+75.33	19.58'	413.52	413.52 - 0.02(15.5) + 7/12 - 0.06(3.5833) + 3" REVEAL = 413.83 OK✓
7	66+76.34	17.50'	413.54	413.54 - 0.02(15.5) + 7/12 = 413.81
8	66+88.06	19.58'	413.79	413.79 - 0.02(15.5) + 7/12 - 0.06(3.5833) + 3" REVEAL = 414.10 OK✓

VHB *Computations*

Project: Br #93
Location: Castleton, VT
Calculated by: EAF
Checked by:
Title Wingwall Elevations

Project # 57632.00
Sheet of
Date: 3/28/14
Date:

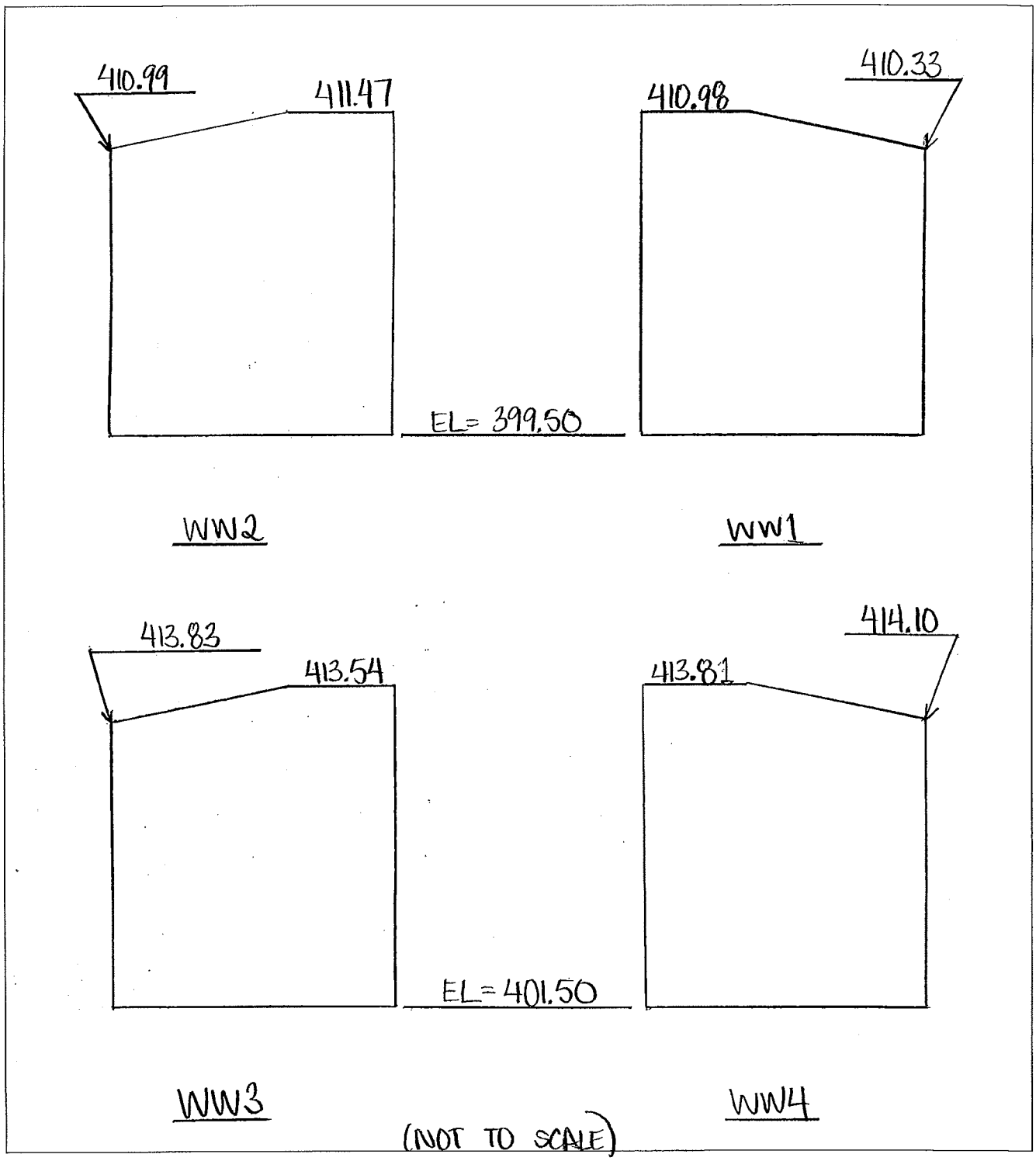

57632-Co[illegible]ton

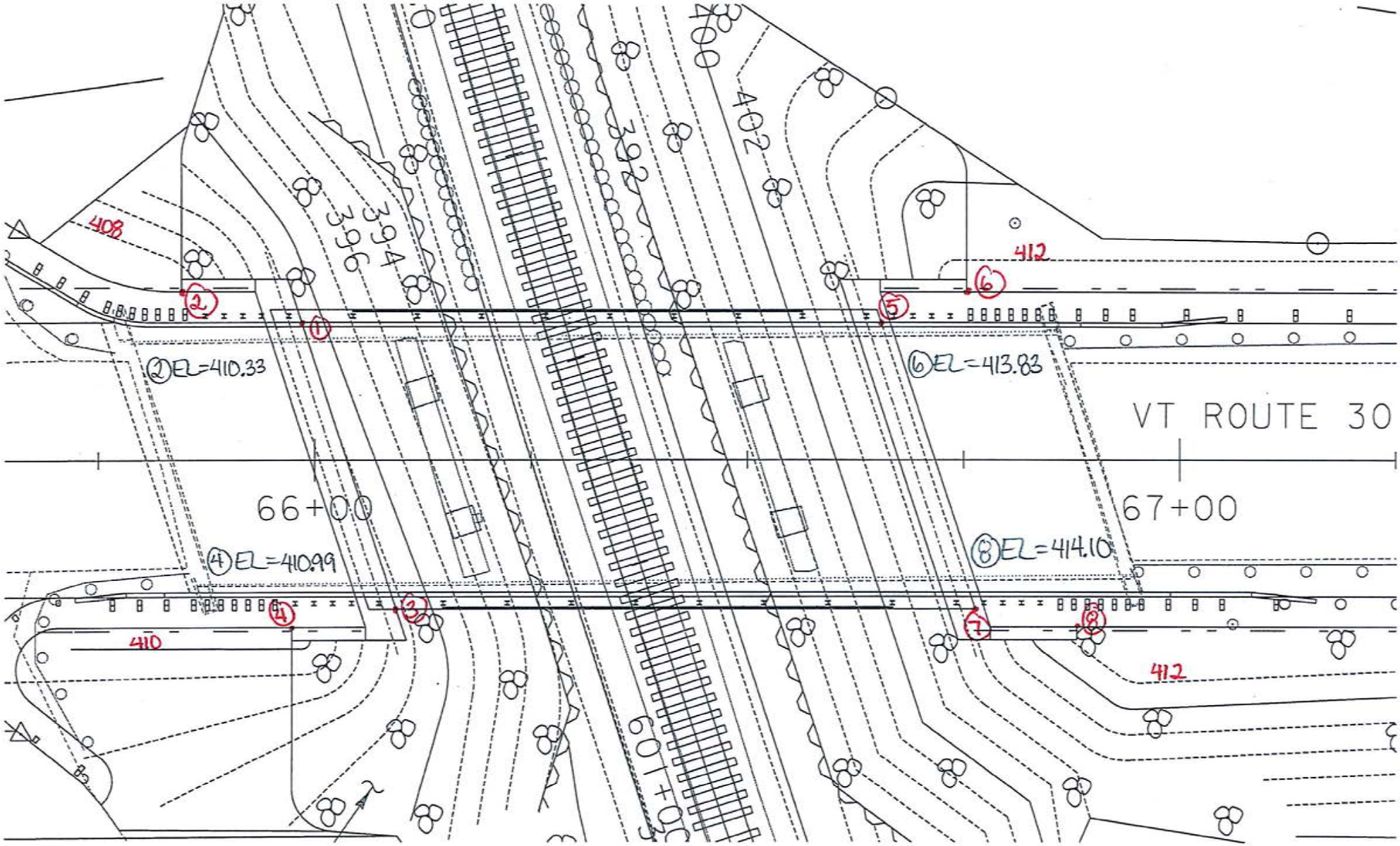

N
408
394
396
392
400
402
412
410
412
② EL=410.33
④ EL=410.99
⑥ EL=413.83
⑧ EL=414.10
VT ROUTE 30
66+00
67+00

VHB *Computations*

Project: Br #93 | Project # 57632.00
Location: Castleton, VT | Sheet of
Calculated by: EAF | Date: 3/19/14
Checked by: | Date:
Title Wingwall @ Abutment Elevation

Top of Wingwalls @ Abut. 1

	℄ ROAD EL. FROM PROFILE
→ ℄ Brg. @ Edge of Bridge & WW1 = 65+97.48	410.69
→ ℄ Brg. @ Edge of Bridge & WW2 = 66+08.85	411.12
From ℄ Road to top of curb LT & RT = + 0.2633	

→ Elevation of WW1 = 410.95, use WW calc EL = 410.98

→ Elevation of WW2 = 411.38, use WW calc EL = 411.47

Top of Wingwalls @ Abut. 2

→ ℄ Brg. @ Edge of Bridge & WW3 = 66+65.98	413.28
→ ℄ Brg. @ Edge of Bridge & WW4 = 66+77.41	413.57

→ Elevation of WW3 = 413.54 (matches WW calc)

→ Elevation of WW4 = 413.83 (matches WW calc)

VHB *Computations*

Project: Br #93 | Project # 57632.00
Location: Castleton, VT | Sheet of
Calculated by: EAF | Date: 4/18/14
Checked by: | Date:
Title Cheekwall Design

-Cheekwall elevation will be level with highest top of curb.

- All wingwalls will be level for 2' from abutment, then slope down to have 6" reveal above proposed grade (at end of wing).

-From wingwall design/Abut design:

	Top of Cheekwall	Abut Seat El	Height of Cheek wall, Δ
WW1	410.98	407.50	3.48
WW2	411.47	407.99	3.48
WW3	413.54	410.08	3.46
WW4	413.83	410.35	3.48

VHB *Computations*

Project: Br #93
Location: Castleton, VT
Calculated by: EAF
Checked by: KBR
Title Cheekwall Design

Project # 57632.00
Sheet of
Date: 3/26/14
Date: 4/23/14

Cheekwall in Plan View:

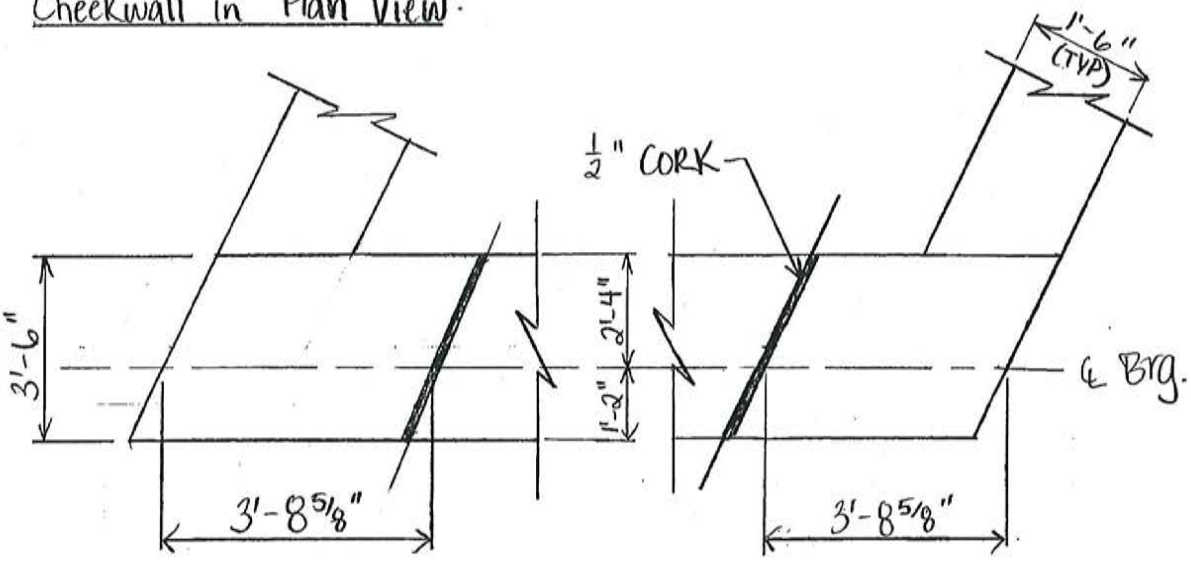

PLAN VIEW

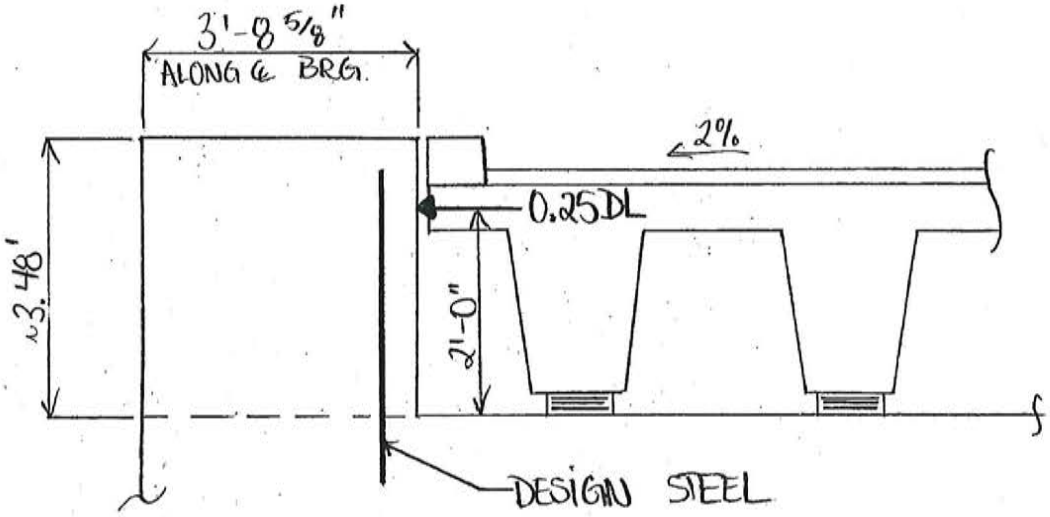

ΣDL from Conspan (strength) $= \frac{59.6+59.6+59.6+59.6}{4} = \underline{\underline{59.6\ k}}$

Transportation
Land Development
Environmental
Services

Computations

Vanasse Hangen Brustlin, Inc.

Project	Br. 93	Project #	57632.00
Location	Castleton, VT	Sheet	
Calculated By	EAF	Date	3/26/2014
Checked By	KBR	Date	4/23/14
Title	Cheek Wall Design		

Cheek Wall Design

[ ] = Input in Shaded Cells

f'_c =	5	ksi
γ_{conc} =	150	ksi
γ_{soil} =	140	ksi
ϕ_f =	34	degrees
Length of Cheek Wall =	3.48	ft
b, Thickness of Cheek Wall =	3.50	ft
d, Height of Cheek Wall =	3.72	ft
f_y =	60	ksi

http://www.fhwa.dot.gov/bridge/lrfd/pscus71.htm

0.25 x DL Structure =	**59.600**	**k**	(with service load factor)
Dist. from Top of Abut. to DL =	**2.00**	**ft**	

$$M = w * (dist)$$

where: w = 59.60 k
dist = 2.00 ft

M =	**119.20**	**k-ft**	**(Service)**
M_u =	**149.00**	**k-ft**	**(Strength)**

V_{max} = p

V_{max} =	**59.60**	**kips**	**(Service)**
V_u =	**74.50**	**kips**	**(Strength)**

Section Properties:

width of cap: b =	42.00	in	
depth of cap: d =	44.625	in	
Concrete Cover =	3	in	(5.13.3-1)
Bar Size =	6		
# of Bars =	4	ea	
Diameter Bar =	0.75	in	
A_s =	0.44	in^2	
Approx Spacing =	**12.00**	**in**	
A_s provided =	1.76	in^2	
d_s =	41.25		

Effective depth = depth - cover - $d_b/2$

d_e = 41.25 in

Rectangular Comp Block: $a = \frac{A_s f_y}{0.85 f'_c b_w}$ a = 0.592 in^2

Cheek Wall Design

Flexural Resistance:

$$M_r = \emptyset M_n = A_s f_s \left(d_s - \frac{a}{2}\right)$$ (5.7.3.2.2-1)

a =	0.59	in^2
M_n =	4325	k-in
M_r =	3892	k-in
M_r =	324	k-ft
M_u =	149	k-ft

Check that $M_u < M_r$: OK

Crack Control (5.7.3.4):

The spacing of mild steel reinforcement in the layer closest to the tension face shall satisfy the following:

$$s \le \frac{700\gamma_e}{\beta_s f_{ss}} - 2d_c$$

where: $\beta_s = 1 + \frac{d_c}{0.7(h - d_c)}$

where: d_c = 3.38 in
h = 44.63 in

β_s = 1.12

$$f_{ss} = \frac{M_{ser}}{A_s j d_s}$$

where: $j = 1 - k/3$

where: $k = \sqrt{n^2\rho^2 + 2n\rho} - n\rho$

where: $n = \frac{E_s}{E_c}$

where: $E_c = 1{,}820\sqrt{f'_c}$

E_c = 4069.64 ksi

n = 7.13

$\rho = \frac{A_s}{d_s b}$

ρ = 0.00102

k = 0.113

j = 0.9622

f_{ss} = 20.48 ksi

γ_e = 0.75 (5.7.3.4-1) 0.75 for Class 2 exposure condition (conservativ

Check the spacing: $s \le \frac{700\gamma_e}{\beta_s f_{ss}} - 2d_c$

s ≤ 16.21 OK

Cheek Wall Design

Minimum Reinforcing Requirements (LRFD 5.7.3.3):

The amount of reinforcement shall be adequate to develop a factored flexural resistance, M_r, at least equal to the lesser of:

$1.33M_r$ **OR** $M_{cr} = \gamma_3\left[(\gamma_1 f_r + \cancel{\gamma_2 f_{pe}})S_c - \cancel{M_{dnc}}\left(\frac{S_c}{S_{nc}} - 1\right)\right]$

(0 - for prestressed)

where:

for Cracking: $f_r = 0.2\sqrt{f'_c}$ (5.4.2.6)

f_r =	0.447	ksi	
γ_1 =	1.2	for precast	(5.7.3.3.2)
γ_3 =	0.67	for A615, Grade 60 reinforcement	

$S_c = \frac{b * d^2}{6}$

S_c =	13940	in^3

$M_{cr} = \gamma_3[(\gamma_1 f_r)S_c]$

M_{cr} =	**417.68**	**kip-ft**
1.33 * M_{str} =	**1.33 * M_{str} =**	**198.17** **kip-ft**

The lesser of 1.33M_r and M_{cr} = 198.17 kip-ft

Check that M_r > the lesser of 1.33M_{str} and M_{cr}: OK

Effective Shear Depth:

V_n shall be the lesser of: $V_{n1} = V_c + V_s + V_p$ or $V_{n2} = 0.25f'_c b_v d_v + V_p$

where: $V_c = 0.0316\beta\sqrt{f'_c}b_v d_v$ (for when the procedures of Articles 5.8.3.4.1 or 5.8.3.4.2

$V_c = the\ lesser\ of\ V_{ci}\ and\ V_{cw}$ (for when the procedures of Article 5.8.3.4.3 are used)

where:

d_v shall be taken as the greatest of (5.8.2.9):

$d_{v1} = 0.9d_e\ or\ d_{v2} = 0.72h$ or $d_{v3} = d_e - a/2$

where: $d_e = \frac{A_{ps}f_{ps}d_p + A_s f_y d_s}{A_{ps}f_{ps} + A_s f_y}$

d_{v1} =	37.125	in	
d_{v2} =	32.130	in	
d_{v3} =	40.954	in	
max d_v =	**40.954**	**in**	
β =	**2.00**		(5.8.3.4.1)

Solve:

$V_c = 0.0316\beta\sqrt{f'_c}b_v d_v$	V_c =	**243.08**	**kip**	
$V_{n1} = V_c + V_s + V_p$	$V_{n1} = V_c$ =	**243.08**	**kip**	*** (doesn't include Vs)
$V_{n2} = 0.25f'_c b_v d_v + V_p$	V_{n2} =	**2150.10**	**kip**	
$V_r = \phi V_n$ where ϕ=0.90	V_r =	**218.77**	**kip**	

Check that V_r > V_{str}: 218.77 vs. 74.50 OK

Transportation
Land Development
Environmental
Services

Computations

Vanasse Hangen Brustlin, Inc.

Project	Br. 93	Project #	57632.00
Location	Castleton, VT	Sheet	
Calculated By	EAF	Date	3/26/2014
Checked By	KBR	Date	4/23/14
Title	Cheek Wall Design		

Cheek Wall Design

For Transverse Reinforcing:

Minimum shear reinforcement required: $V_r = \phi V_n$ (5.8.2.1-2)

V_u =	59.6	kips
$0.5\Phi V_c$ =	109.4	kips

STIRRUPS NOT REQUIRED

FOR REINFORCING USE: 12.00 in spacing Bar #: 6

Section 3.0

Pile Design Check

Transportation
Land Development
Environmental
Services

Computations

Vanasse Hangen Brustlin, Inc.

Project	Br. 93	Project #	57632.00
Location	Castleton, VT	Sheet	
Calculated By	EAF	Date	7/14/2014
Checked By	CJH	Date	7/21/2014
Title	Pile Design Check		

Br. 93 Pile Design Check

[ ] = Input in Shaded Cells

Reference AASHTO 6.15 - Piles

Per 6.5.4.2, for axial resistance of piles in compression and subject to damage due to severe driving conditions where use of pile tp is necessary:

For Axial Capacity:	ϕ_c =	0.50	(axial capacity at the tip with no unbraced length)
For Structural:	ϕ_c =	0.90	

6.9.2.1 - Axial Compression

$$P_r = \phi_c P_n$$

Check the width/thickness requirements per 6.9.4.2 using HP 12x63 piles

Slenderness of flanges must satisfy:

$$\frac{b}{t} \leq k\sqrt{\frac{E}{F_y}}$$

b_f =	12.125	in	
t_f =	0.515	in	
k =	0.56		Table 6.9.4.2-1 for flanges and projecting legs or plates
b =	6.0625		
E =	29000		
F_y =	50	ksi	
A_g =	18.4	in^2	for HP 12x63

b/t = 11.77
$k*(E/F_y)^{1/2}$ = 13.49

Check: 11.77 <= 13.49

Therefore, non-slender, use 6.9.4.1 to calculate the compressive resistance, Q = 1.0

Slenderness of web:

b =	9.44	in
t =	0.52	in
k =	1.49	

b/t = 18.33
$k*(E/F_y)^{1/2}$ = 35.88

Check: 18.33 <= 35.88

Therefore, non-slender, use 6.9.4.1 to calculate the compressive resistance, Q = 1.0

Transportation
Land Development
Environmental
Services

Computations

Vanasse Hangen Brustlin, Inc.

Project	Br. 93	Project #	57632.00
Location	Castleton, VT	Sheet	
Calculated By	EAF	Date	7/14/2014
Checked By	CJH	Date	7/21/2014
Title	Pile Design Check		

Br. 16 Pile Design Check

where 6.9.4.1 - Noncomposite Members:

solve for:

P_e = elastic critical buckling resitance determined as specified in Article 6.9.4.1.2 for flexure buckling, and as specified in Article 6.9.4.1.3 for torsional buckling or flexural-torsional buckling, as applicable (kips)

P_o = equivalent nominal yield resitance = QF_yA_g (kips)

$$P_r = \phi_c P_n$$

A_g = gross cross-sectional area of the member (in^2)

F_y = specified minimum yield strength (ksi)

Q = slender element reduction factor determined as specified in Article 6.9.4.2. Q shall be taken equal to 1.0 for bearing stiffeners.

A_g =	18.4	in^2	for HP 12x63
F_y =	50	ksi	
Q =	1.0		
I_x =	472.00	in^4	
I_y =	153.00	in^4	

P_o = 920.00 kips

6.9.4.1.2 - Elastic Flexural Buckling Resistance

$$P_e = \frac{\pi^2 E}{\left(\frac{Kl}{r_s}\right)^2} A_g$$

where:

A_g =	18.4	in^2
K =	1.0	from 4.6.2.5 for pin-pin connection
l =	120	in unbraced length in the plane of buckling
r_s =	2.88	radius of gyration about the axis normal to the plane of buckling (in)
E =	29000	ksi

P_e = 3041.07 kips

Solve P_e/P_o = 3.31 use 6.9.4.1.1-1

6.9.4.1.1-1 Since Pe/Po >= 0.44,

$$P_n = \left[0.658^{\left(\frac{P_o}{P_e}\right)}\right] P_o$$

P_n = 810.58 kips

$$P_r = \phi_c P_n$$

(use structural ϕ_c)

P_r = 729.52 kips

Axial Capacity at the Tip

P_o = 920.00 kips

$$P_e = \frac{\pi^2 E}{\left(\frac{kl}{r_s}\right)^2} A_g$$

as l approached 0, Pe =» infinity

If P_e = infinity, $P_e/P_o \geq 0.44$

$$P_n = \left[0.658^{\left(\frac{P_o}{P_e}\right)}\right] P_o = 1.00$$

$P_n = P_o$ = 920.00 kips

$$P_r = \phi_c P_n$$

(use axial ϕ_c)

P_r = 460.00 kips

Axial Capacity at the Tip Controls = 460.00 kips

Transportation
Land Development
Environmental
Services

Computations

Vanasse Hangen Brustlin, Inc.

Project	Br. 93	Project #	57632.00
Location	Castleton, VT	Sheet	
Calculated By	EAF	Date	7/14/2014
Checked By	CJH	Date	7/21/2014
Title	Pile Design Check		

Br. 16 Pile Design Check

Check vs. Geotech report loads:

From Geotech report, the nominal axial pile resitance, or resistance the piles should be driven to, = 288.0 kips

Check that P_r > Nominal Axial Pile Resistance from Geotech Loads 460.00 > 288.0 OK

Check vs. Larsa Loads:

From Larsa: STRENGTH I Max. Reaction at any pile location = 225.50 kips

Check that P_r > Reactions at piles 460.00 > 225.5 OK

Check that Larsa Loads < Geotech Report Loads: 225.50 < 288.0 OK

Torsional Buckling Check: Torsional buckling does not apply because $k_z\ell_z = k_y\ell_y$

Joint Reactions

Joint	Result Case	Force X (kips)	Force Y (kips)	Force Z (kips)	Moment X (kips-ft)	Moment Y (kips-ft)	Moment Z (kips-ft)
2	All Loads	0.0000	0.0000	218.1375	0.0000	0.0000	0.0000
3	All Loads	0.0000	0.0000	128.3286	0.0000	0.0000	0.0000
4	All Loads	0.0000	0.0000	163.9659	0.0000	0.0000	0.0000
5	All Loads	0.0000	0.0000	165.1088	0.0000	0.0000	0.0000
6	All Loads	0.0000	0.0000	119.9100	0.0000	0.0000	0.0000
7	All Loads	0.0000	0.0000	225.4923	0.0000	0.0000	0.0000

Section 4.0

Sheet Pile Elevations

Project: Br #93 | Project # 57632.00
Location: Castleton, VT | Sheet 1 of 4
Calculated by: EAF | Date: 4/2/14
Checked by: CJH | Date: 7/21/2014
Title Sheet Pile Elevation

From Cross Sections along Rail, minimum elevation of Top of Sheet Piles (use top of stonefill at back of sheeting):

STA.	LT **	RT **
600+00	392.00	—
600+25	391.99	390.36 ← @ ~600+15, 392' min
600+50	392.00	391.83
600+75	392.07	392.17
601+00	392.00	@ ~600+95, 392.0' min

Slopes behind sheet piling can be made shallower, but not steeper.

- For Sheet Piling on Left (Abutment 2 side) = 392.00 **
- For Sheet Piling on Right (Abutment 1 side) = 392.00 **
  - *assume for the 390.36 & 391.36 elevations that the slope can be made shallower
  - *assume for the 392.17 elevation that 2" difference will barely effect the 1.5:1 slope behind the wall.

** - Include 6" for reveal so sheet piling is taller than F.G.

* Minimum elevations at the top of all sheet piling shall be EL=392.50

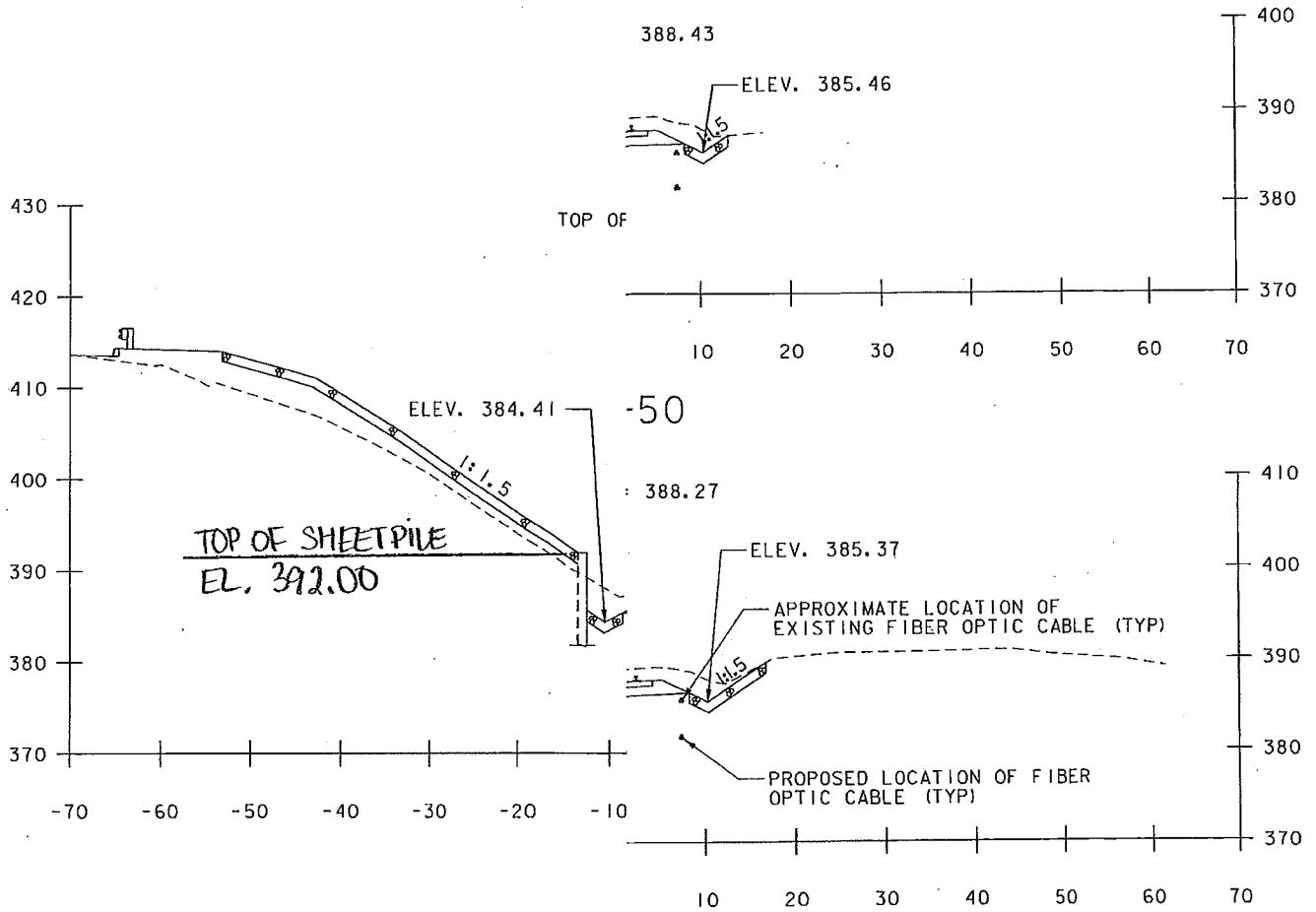

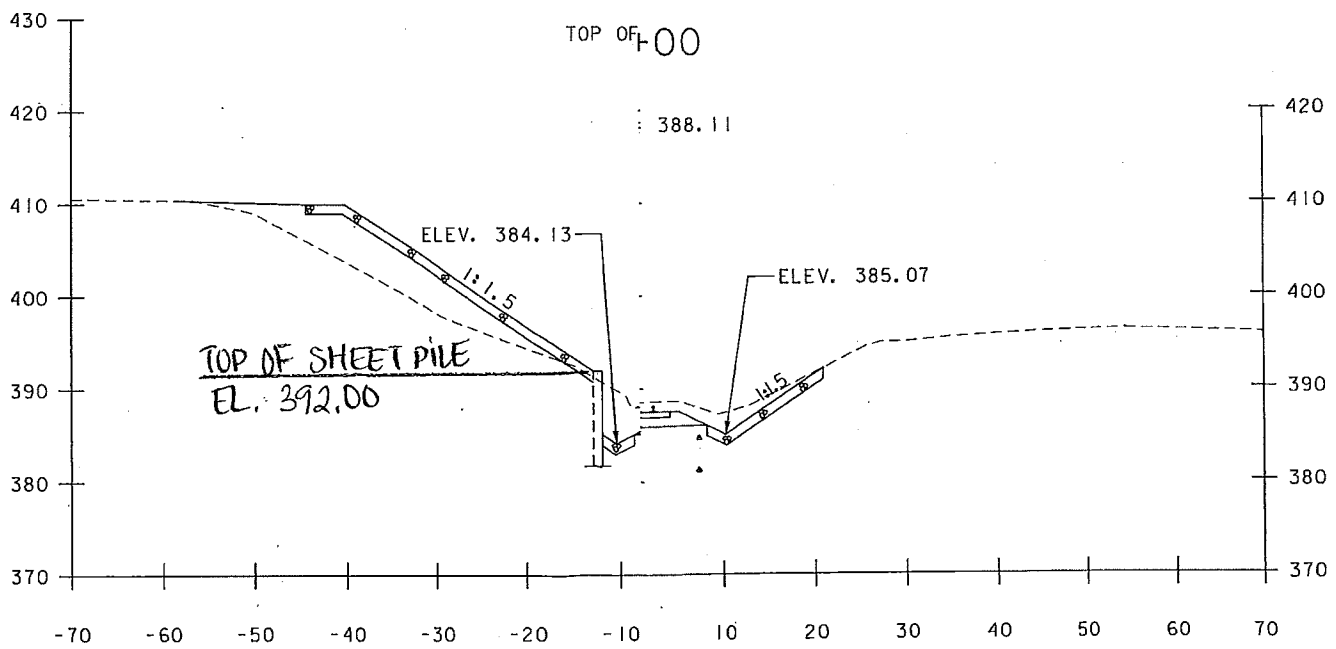

#50 Sheet Pile Elevations (2 of 4)

PROJECT NAME: CASTLETON	
PROJECT NUMBER: BRF 015-2(10)	
FILE NAME: z12b138xs.dgn	PLOT DATE: 4/2/2014
PROJECT LEADER: S.E. BURBANK	DRAWN BY: E.A. FIALA
DESIGNED BY: E.A. FIALA	CHECKED BY: S.E. BURBANK
RAILROAD CROSS SECTIONS (3 OF 5)	SHEET 1 OF 1

nc.

VHB 57632

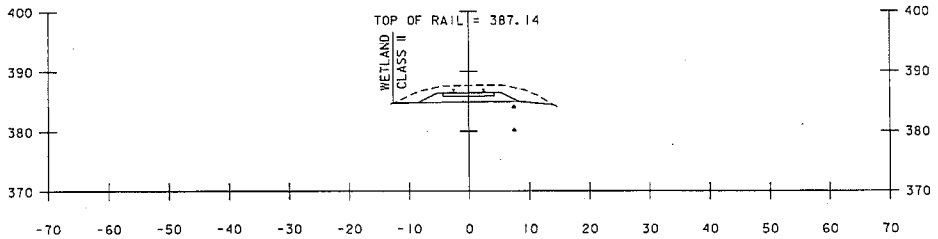

598+50

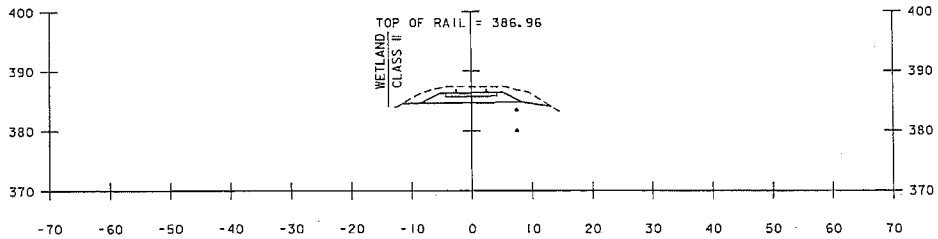

598+00

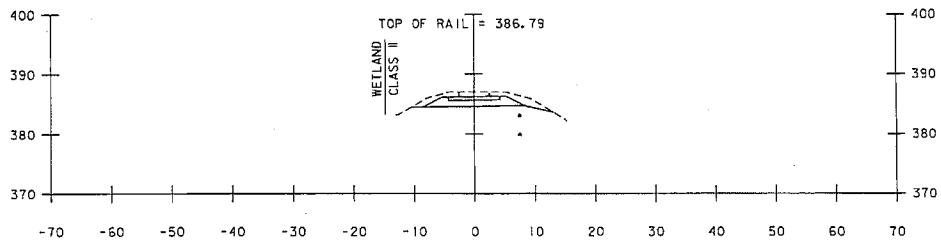

597+50

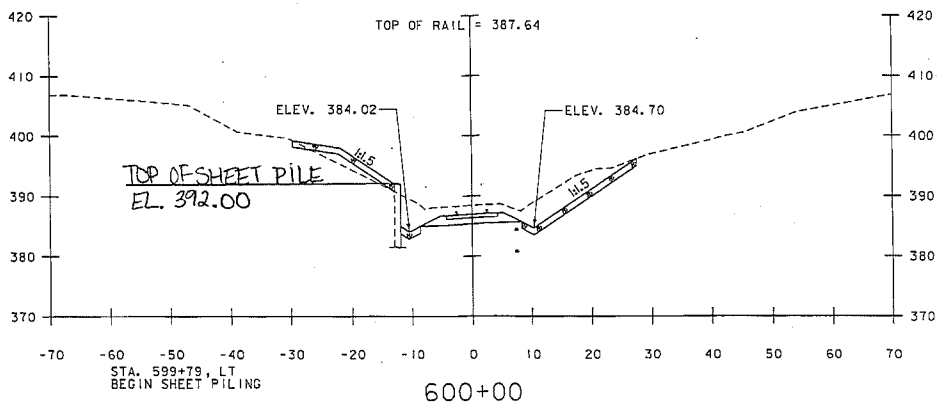

600+00

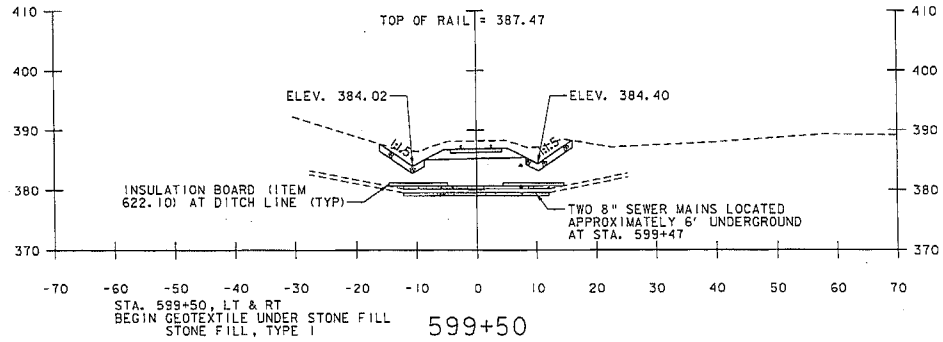

599+50

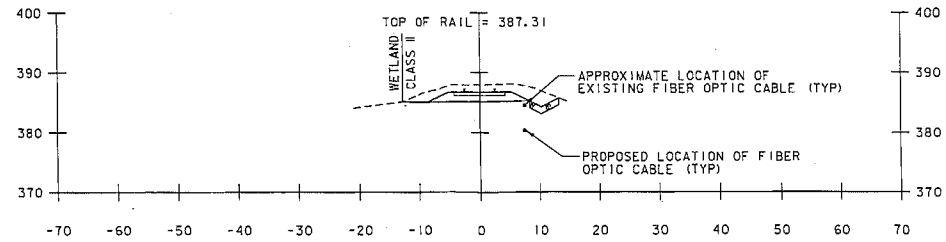

599+00 Sheet Pile Elevations (3 of 4)

RAILROAD CROSS SECTIONS

SCALE 1" = 10'-0"

STA. 597+50 - 600+00

Vanasse Hangen Brustlin, Inc.

PROJECT NAME: CASTLETON	
PROJECT NUMBER: BRF 015-2(10)	
FILE NAME: z12b138xs.dgn	PLOT DATE: 4/2/2014
PROJECT LEADER: S.E. BURBANK	DRAWN BY: E.A. FIALA
DESIGNED BY: E.A. FIALA	CHECKED BY: S.E. BURBANK
RAILROAD CROSS SECTIONS (2 OF 5)	SHEET 1 OF 1

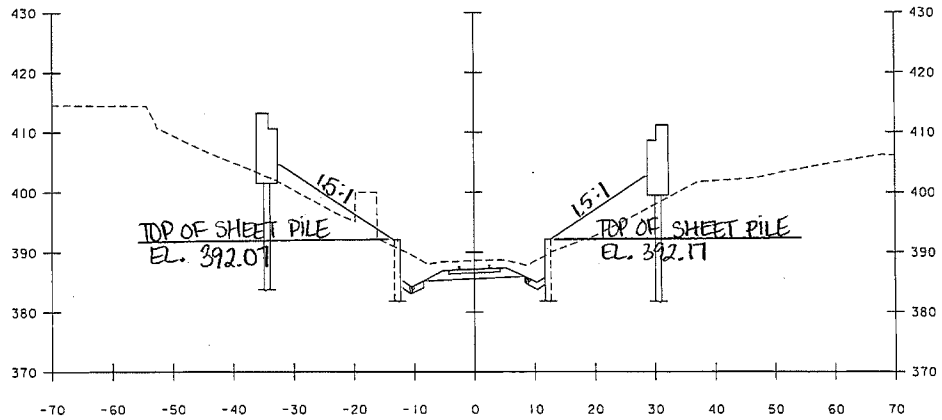

600+75

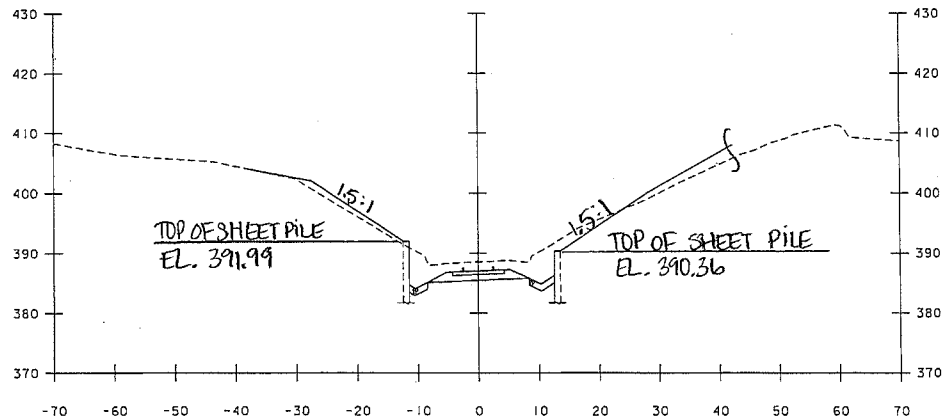

600+25

RAILROAD CROSS SECTIONS
SCALE 1" = 10'-0"
STA. 600+25 & 600+75

Sheet Pile Elevations (4 of 4)

Vanasse Hangen Brustlin, Inc.

PROJECT NAME: CASTLETON	
PROJECT NUMBER: BRF 015-2(10)	
FILE NAME: zl2bl38xs.dgn	PLOT DATE: 4/2/2014
PROJECT LEADER: S.E. BURBANK	DRAWN BY: E.A. FIALA
DESIGNED BY: E.A. FIALA	CHECKED BY: S.E. BURBANK
ADDITIONAL RAIL CROSS SECTIONS	SHEET 1 OF 1