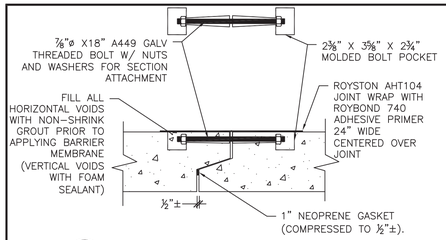

1 S1.0 BOX CULVERT JOINT CONNECTION DETAIL
1" = 1'-0"

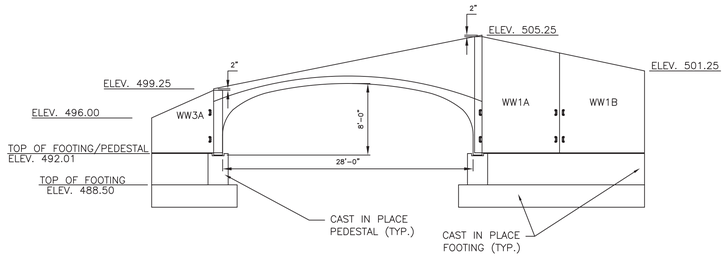

2 S1.0 CULVERT LAYOUT ELEVATION INLET VIEW
⅛" = 1'-0"

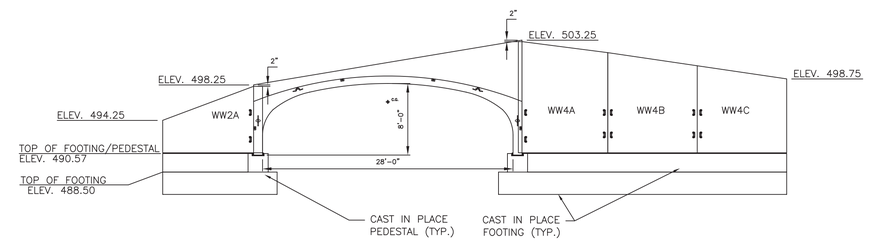

3 S1.0 CULVERT LAYOUT ELEVATION OUTLET VIEW
⅛" = 1'-0"

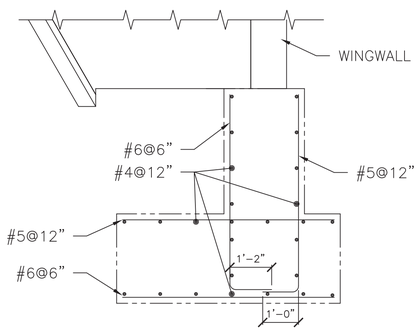

4 S1.0 WING WALL FOOTING SECTION
3/16" = 1'-0"

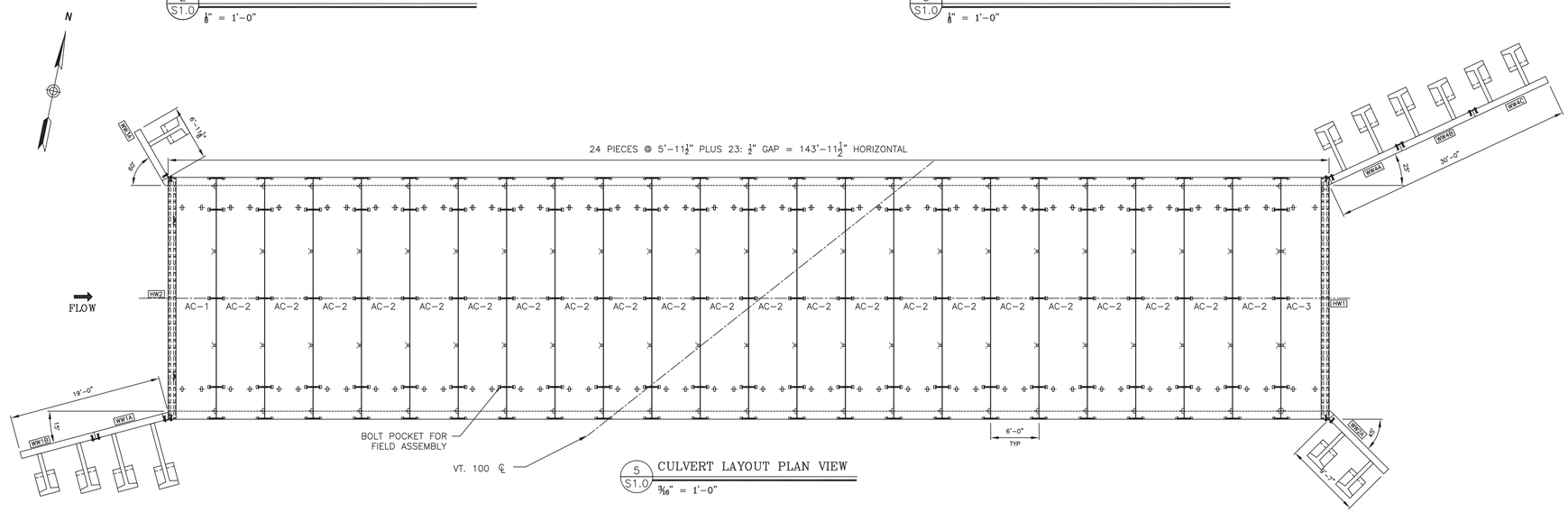

5 S1.0 CULVERT LAYOUT PLAN VIEW
3/16" = 1'-0"

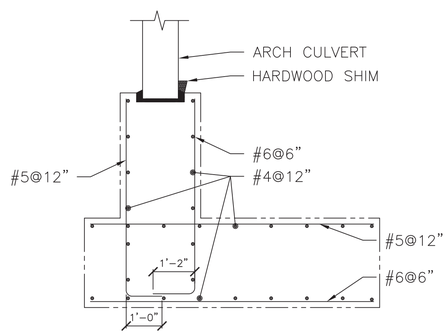

6 S1.0 CULVERT FOOTING SECTION
3/16" = 1'-0"

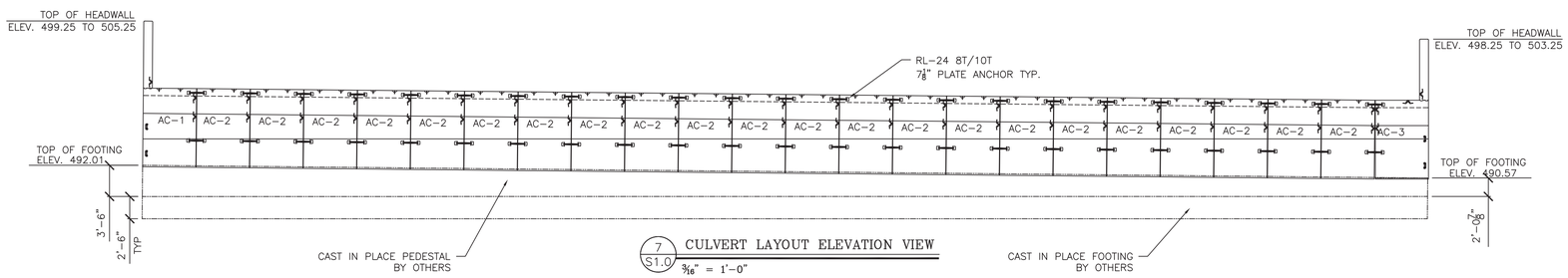

7 S1.0 CULVERT LAYOUT ELEVATION VIEW
3/16" = 1'-0"

GENERAL NOTES:

1. THE PLANS ARE INTENDED TO BE DRAWN TO SCALE. HOWEVER, IF A CRITICAL DIMENSION IS NOT PROVIDED, MICHIE CORPORATION SHOULD BE CONTACTED FOR VERIFICATION.

2. IF ANY OF THE WORK TO BE DONE AS SHOWN ON THE DRAWINGS DOES NOT CORRESPOND WITH THE EXISTING FIELD CONDITIONS, CONTACT THE ENGINEER PRIOR TO PROCEEDING WITH THE WORK IN QUESTION.

3. FIELD-VERIFY ALL ELEVATIONS PRIOR TO THE START OF CONSTRUCTION. IF THERE ARE ANY DISCREPANCIES, CONSULT THE ENGINEER PRIOR TO PROCEEDING WITH THE WORK IN QUESTION.

4. MAINTAIN MINIMUM 60 DEGREE SLING ANGLE WHEN HANDLING PRECAST COMPONENTS.

5. PRECAST COMPONENTS SHALL REACH A MINIMUM COMPRESSIVE STRENGTH OF 3,000 PSI PRIOR TO STRIPPING, AND THE MINIMUM DESIGN COMPRESSIVE STRENGTH PRIOR TO SHIPPING, UNLESS OTHERWISE DIRECTED BY THE ENGINEER.

6. HORIZONTAL JOINTS AND VOIDS SHALL BE FILLED WITH NON-SHRINK GROUT.

7. SHOP DRAWINGS WERE DEVELOPED USING THE FOLLOWING RESOURCES FOR THE CONTRACT:
   - "TOWN OF DUXBURY, DUXBURY, VERMONT, VT100 ROAD CULVERT PROJECT PLANS.

8. IF THERE IS ADDITIONAL INFORMATION PERTINENT TO THE FABRICATION AND INSTALLATION OF THESE UNITS THAT IS NOT CONTAINED WITHIN THE RESOURCES LISTED ABOVE IT SHALL BE BROUGHT TO THE ATTENTION OF MICHIE CORPORATION. FAILURE TO MAKE SUCH ADDITIONAL INFORMATION AVAILABLE SHALL RELIEVE MICHIE CORPORATION OF ALL LIABILITIES ARISING FROM ERRORS OR OMISSIONS RELATED TO THE OMITTED INFORMATION.

ARCH CULVERT NOTES:

1. BOX CULVERT SECTIONS ARE DESIGNED IN ACCORDANCE WITH
   - AASHTO "LRFD BRIDGE DESIGN SPECIFICATIONS", 6TH EDITION.
   - SPECIAL PROVISIONS SECTION 520.

2. THE FOLLOWING CRITERIA WAS USED FOR DESIGN:
   - LIVE LOAD: HL-93
   - EARTH COVER: 8.6 FEET
   - BACKFILL SOIL UNIT WEIGHT: 140 PCF
   - BACKFILL SOIL FRICTION ANGLE: 30 DEGREES
   - CONCRETE STRENGTH: 6,000 PSI
   - STEEL YIELD STRENGTH: 60,000 PSI

3. ARCH CULVERT AND HEADWALL CONCRETE SHALL BE SELF-CONSOLIDATING CONFORMING TO ASTM C260 WITH A MINIMUM 28-DAY COMPRESSIVE STRENGTH OF 6,000 PSI. AGGREGATE SHALL CONFORM TO ASTM C-33 WITH A MAXIMUM DIAMETER OF 3/4". CEMENT SHALL CONFORM TO ASTM C150.

4. REINFORCING SHALL BE GRADE 60 DEFORMED BLACK BARS CONFORMING TO ASTM A-615. REINFORCING WITHIN THE HEADWALL SHALL BE GARDE 60, EPOXY COATED, CONFORMING TO ASTM A-615. ALL BARS SHALL BE BENT COLD.

5. ALL EXPOSED EDGES EXCEPT WHERE NOTED SHALL BE CHAMFERED 3/4".

6. SUBGRADE PREPARATION SHALL CONFORM TO PROJECT PLANS.

7. BACKFILL MATERIAL SHALL CONFORM TO SECTION 209. BACKFILL SHALL EXTEND FOR A MINIMUM DISTANCE OF 3'-0" BEYOND THE HORIZONTAL LIMITS OF THE STRUCTURE.

8. EXPOSED SURFACES SHOULD BE COATED WITH BARRIER MEMBRANE WATERPROOFING (SUPPLIED BY OTHERS).

9. EACH SECTION SHALL BE PROVIDED WITH BOLT POCKETS FOR ATTACHMENT TO ADJACENT SECTIONS. 7/8" DIA. GALV. THREADED ROD, WASHERS AND NUTS SHALL BE PROVIDED FOR ASSEMBLY IN THE FIELD. CLOSED-CELL NEOPRENE JOINT SEALANT SHALL BE USED IN ALL JOINTS UNLESS NOTED OTHERWISE.

10. 2FT WIDE ROYSTON JOINT WRAP WITH ADHESIVE PROVIDED BY MICHIE CORP, INSTALLED BY OTHERS, CENTER ON JOINT AFTER HORIZONTAL GROUTING. BARRIER MEMBRANE PROVIDED AND INSTALLED BY OTHERS OVER TOP OF STRUCTURE, AND DOWN SIDES TO 6" BELOW HORIZONTAL JOINT.

WING WALL NOTES:

1. SECTIONS ARE DESIGNED IN ACCORDANCE WITH
   - AASHTO "LRFD BRIDGE DESIGN SPECIFICATIONS", 6TH EDITION
   - SPECIAL PROVISIONS SECTION 520.

2. THE FOLLOWING SOIL PROPERTIES WERE USED IN THE DESIGN:

	SOIL WEIGHT [PCF]	FRICTION ANGLE [DEG]
• RETAINED SOIL	140	32
• FOUNDATION SOIL	140	32

   - LIVE LOAD SURCHARGE = 2'
   - BACKSLOPE ANGLE: ±8:1
   - ALLOWABLE BEARING RESISTANCE = 6,000 PSF

3. CONCRETE SHALL BE SELF-CONSOLIDATING CONFORMING TO ASTM C260 WITH A MINIMUM 28-DAY COMPRESSIVE STRENGTH OF 4,000 PSI. AGGREGATE SHALL CONFORM TO ASTM C-33 WITH A MAXIMUM DIAMETER OF 3/4". CEMENT SHALL CONFORM TO ASTM C150.

4. REINFORCING SHALL BE GRADE 60 DEFORMED BLACK BARS CONFORMING TO ASTM A-615. ALL BARS SHALL BE BENT COLD.

5. ALL EXPOSED EDGES EXCEPT WHERE NOTED SHALL BE CHAMFERED 3/4".

6. BACKFILL MATERIAL SHALL CONFORM TO SECTION 209.

7. SUBGRADE PREPARATION SHALL CONFORM SECTION 209 BEDDING FOR STRUCTURES. FOOTINGS SHALL BE PLACED AT ELEVATIONS SHOWN ON A MINIMUM OF 1'-0" OF CRUSHED STONE CONFORMING. ALL TOPSOIL, LOOSE FILL, AND DELETERIOUS MATERIALS SHALL BE REMOVED BEFORE PLACING BACKFILL.

FOOTING NOTES:
1. AASHTO LRFD 6TH EDITION
2. 15.5 KSF FACTORED BEARING RESISTANCE.
3. CAST AGAINST SOUND ROCK OR CIP FOUNDATION SEAL.

LIST OF SHEETS:

S1.0 CULVERT LAYOUT-PLAN AND ELEVATION
S2.0 CULVERT SECTION AND ELEVATION
S3.0 CULVERT SECTIONS AND ELEVATIONS
S4.0 HEAD WALL DETAILS
S5.0 WINGWALL DETAILS
S6.0 WINGWALL DETAILS
S7.0 ANCHOR DETAILS

No.	Date	Revision	By

STATE OF VERMONT REGISTERED PROFESSIONAL ENGINEER Steven G. Wright No. 8031 Structural I 7/16/16

DESIGNED AND DETAILED BY:
DELTA ENGINEERS, ARCHITECTS, & LAND SURVEYORS
860 HOOPER ROAD, ENDWELL, NY 13760-1564
TEL: (607) 231-6600 FAX: (607) 231-6650

VT 100 Road Culvert
Duxbury, Vermont

Culvert Layout - Plan and Elevation

Scale: AS SHOWN
Checked by:
Drawn by: GSC
Designed by: DELTA
Project No. 7347
Date: 6/29/16

PREPARED FOR:
MICHIE CORPORATION, INC.
172 BUXTON INDUSTRIAL DRIVE-PO BOX 870
MARION, VIRGINIA 10522
PHONE: 603-428-3218
FAX: 603-428-7426

DWG NO.
S1.0

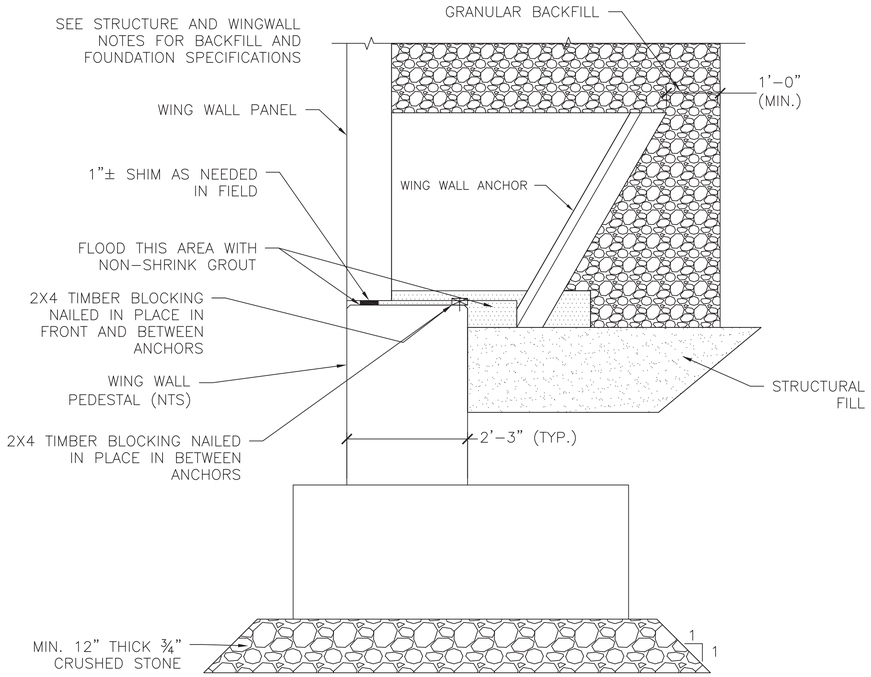

5 / S7.0 FOOTING TO WW ATTACHMENT DETAIL

¾" = 1'-0"

NOTE: BAR COUNTS REPRESENT 1 UNIT.

WW1A REINFORCING SCHEDULE

BAR MARK	LOCATION	TYPE	SIZE/SPACING	CUT LENGTH	# OF PCS
VERTICAL	OSF	STRAIGHT	#5 @ 12"	12'-8" TO 10'-10"	9
VERTICAL	ISF	STRAIGHT	#5 @ 5"	12'-8" TO 10'-10"	22
HORIZONTAL	OSF	STRAIGHT	#5 @ 12"	9'-2"	13
HORIZONTAL	ISF	STRAIGHT	#5 @ 12"	8'-11"	13
DIAGONAL	FOLLOW SLOPE	STRAIGHT	#4	8'-10"	2

WW1B REINFORCING SCHEDULE

BAR MARK	LOCATION	TYPE	SIZE/SPACING	CUT LENGTH	# OF PCS
VERTICAL	OSF	STRAIGHT	#5 @ 12"	10'-10" TO 8'-10"	10
VERTICAL	ISF	STRAIGHT	#5 @ 5"	10'-10" TO 8'-10"	23
HORIZONTAL	OSF	STRAIGHT	#5 @ 12"	9'-2"	11
HORIZONTAL	ISF	STRAIGHT	#5 @ 12"	9'-2"	11
DIAGONAL	FOLLOW SLOPE	STRAIGHT	#4	9'-4"	2

WW2A REINFORCING SCHEDULE

BAR MARK	LOCATION	TYPE	SIZE/SPACING	CUT LENGTH	# OF PCS
VERTICAL	OSF	STRAIGHT	#5 @ 12"	7'-1" TO 3'-4"	10
VERTICAL	ISF	STRAIGHT	#5 @ 12"	7'-1" TO 3'-4"	10
HORIZONTAL	OSF	STRAIGHT	#5 @ 12"	6'-9"	8
HORIZONTAL	ISF	STRAIGHT	#5 @ 12"	9'-4"	8
DIAGONAL	FOLLOW SLOPE	STRAIGHT	#4	6'-0"	2

WW3A REINFORCING SCHEDULE

BAR MARK	LOCATION	TYPE	SIZE/SPACING	CUT LENGTH	# OF PCS
VERTICAL	OSF	STRAIGHT	#5 @ 12"	5'-8" TO 3'-7"	8
VERTICAL	ISF	STRAIGHT	#5 @ 12"	5'-8" TO 3'-7"	7
HORIZONTAL	OSF	STRAIGHT	#5 @ 12"	6'-7"	6
HORIZONTAL	ISF	STRAIGHT	#5 @ 12"	9'-2"	6
DIAGONAL	FOLLOW SLOPE	STRAIGHT	#4	9'-4"	2

WW4A REINFORCING SCHEDULE

BAR MARK	LOCATION	TYPE	SIZE/SPACING	CUT LENGTH	# OF PCS
VERTICAL	OSF	STRAIGHT	#5 @ 12"	12'-3" TO 10'-10"	10
VERTICAL	ISF	STRAIGHT	#5 @ 12"	12'-3" TO 10'-10"	10
HORIZONTAL	OSF	STRAIGHT	#5 @ 12"	9'-8"	12
HORIZONTAL	ISF	STRAIGHT	#5 @ 12"	9'-3"	12
DIAGONAL	FOLLOW SLOPE	STRAIGHT	#4	9'-4"	2

WW4B REINFORCING SCHEDULE

BAR MARK	LOCATION	TYPE	SIZE/SPACING	CUT LENGTH	# OF PCS
VERTICAL	OSF	STRAIGHT	#5 @ 12"	10'-10" TO 9'-4"	10
VERTICAL	ISF	STRAIGHT	#5 @ 12"	10'-10" TO 9'-4"	10
HORIZONTAL	OSF	STRAIGHT	#5 @ 12"	9'-8"	12
HORIZONTAL	ISF	STRAIGHT	#5 @ 12"	9'-8"	12
DIAGONAL	FOLLOW SLOPE	STRAIGHT	#4	9'-4"	2

WW4C REINFORCING SCHEDULE

BAR MARK	LOCATION	TYPE	SIZE/SPACING	CUT LENGTH	# OF PCS
VERTICAL	OSF	STRAIGHT	#5 @ 12"	9'-4" TO 7'-11"	10
VERTICAL	ISF	STRAIGHT	#5 @ 12"	9'-4" TO 7'-11"	10
HORIZONTAL	OSF	STRAIGHT	#5 @ 12"	9'-8"	10
HORIZONTAL	ISF	STRAIGHT	#5 @ 12"	9'-8"	10
DIAGONAL	FOLLOW SLOPE	STRAIGHT	#4	9'-4"	2

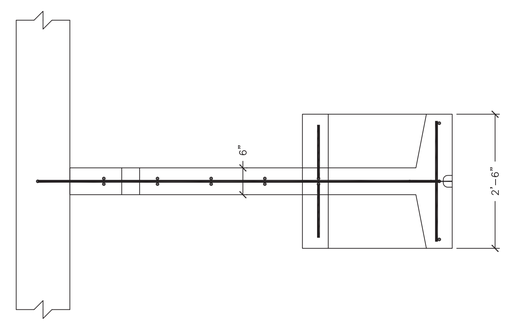

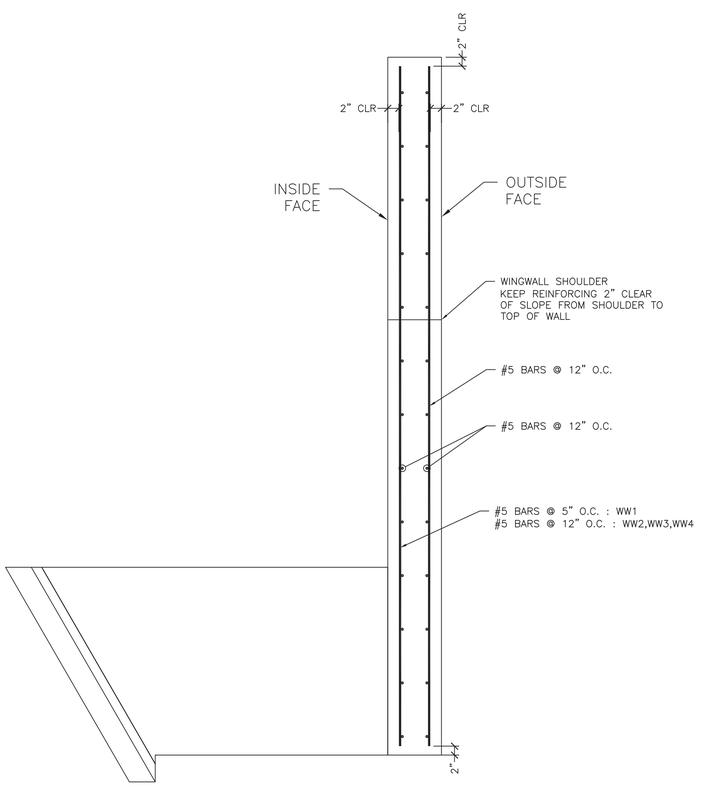

1 / S7.0 WINGWALL REINFORCING (TYP)

¾" = 1'-0"

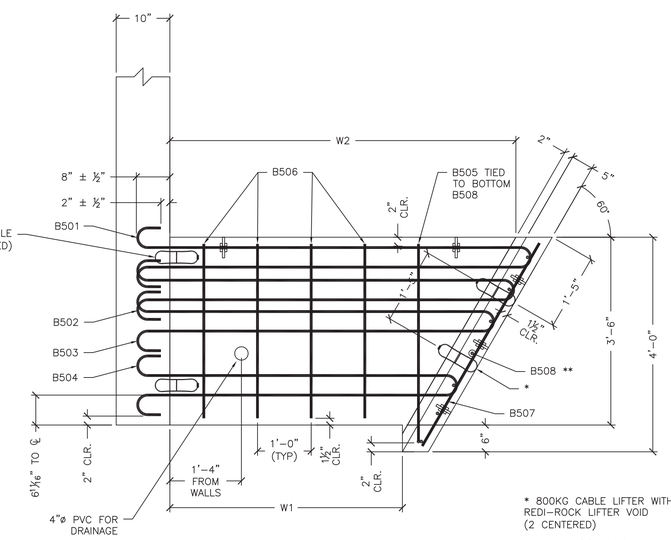

2 / S7.0 ANCHOR DETAIL

¾" = 1'-0"

* 800KG CABLE LIFTER WITH REDI-ROCK LIFTER VOID (2 CENTERED)

** PLACE (1) B508 THROUGH EACH HOOP BARS, (1) CENTERED BETWEEN HOOP BARS 503 & 504, AND (2) BELOW B504 HOOP BAR W/ BOTTOM B508 2" CLEAR FROM BOTTOM (7 TOTAL)

7 REQ'D

ANCHOR TYPE "C"					
CONCRETE QUANTITY				0.48 CY	
WEIGHT				2010 LB	
W1				2'-4"	
W2				4'-5⅞"	
X = 2'-8¾"		Y= 1'-8½"			
BAR LIST					
MARK	QTY	SIZE	L	TYPE	LENGTH
B501	1	#5	5'-4½"	1	12'-1½"
B502	1	#5	5'-0½"	1	11'-5"
B503	1	#5	4'-8¼"	1	10'-9"
B504	1	#5	4'-0"	1	9'-4½"
B505	2	#5	3'-8½"	2	4'-7"
B506	4	#5	----	Str.	3'-3"
B507	4	#5	----	Str.	4'-4½"
B508	7	#5	----	Str.	2'-3"

4 REQ'D

ANCHOR TYPE "D"					
CONCRETE QUANTITY				0.48 CY	
WEIGHT				2020 LB	
W1				3'-4"	
W2				5'-5⅞"	
X = 3'-5⅛"		Y= 1'-8½"			
BAR LIST					
MARK	QTY	SIZE	L	TYPE	LENGTH
B501	1	#5	6'-4½"	1	14'-1½"
B502	1	#5	6'-0½"	1	13'-5"
B503	1	#5	5'-8¼"	1	12'-9"
B504	1	#5	5'-0"	1	11'-4½"
B505	2	#5	3'-8½"	2	4'-7"
B506	6	#5	----	Str.	3'-3"
B507	4	#5	----	Str.	4'-4½"
B508	7	#5	----	Str.	2'-3"

1 REQ'D

ANCHOR TYPE "E"					
CONCRETE QUANTITY				0.61 CY	
WEIGHT				2550 LB	
W1				4'-4"	
W2				6'-5⅞"	
X = 4'-0"		Y= 1'-8⅝"			
BAR LIST					
MARK	QTY	SIZE	L	TYPE	LENGTH
B501	1	#5	7'-4½"	1	16'-1½"
B502	1	#5	7'-0½"	1	15'-5"
B503	1	#5	6'-8¼"	1	14'-9"
B504	1	#5	6'-0"	1	13'-4½"
B505	2	#5	3'-8½"	2	4'-8½"
B506	8	#5	----	Str.	3'-3"
B507	4	#5	----	Str.	4'-4½"
B508	7	#5	----	Str.	2'-3"

1 REQ'D

ANCHOR TYPE "F"					
CONCRETE QUANTITY				0.68 CY	
WEIGHT				2860 LB	
W1				5'-4"	
W2				7'-5⅞"	
X = 4'-7⅝"		Y= 1'-8⅝"			
BAR LIST					
MARK	QTY	SIZE	L	TYPE	LENGTH
B501	1	#5	8'-4½"	1	18'-1½"
B502	1	#5	8'-0½"	1	17'-5"
B503	1	#5	7'-8¼"	1	16'-9"
B504	1	#5	7'-0"	1	15'-4½"
B505	2	#5	3'-8½"	2	4'-8½"
B506	10	#5	----	Str.	3'-3"
B507	4	#5	----	Str.	4'-4½"
B508	7	#5	----	Str.	2'-3"

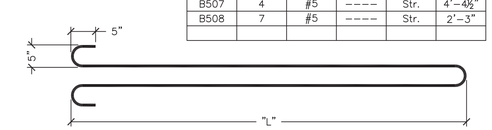

TYPE 1

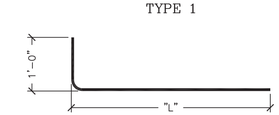

TYPE 2

No.	Date	Revision	By

STATE OF VERMONT — Vernon G. Eaton — No. 9031 — Structural I — PROFESSIONAL ENGINEER — 7/6/16

DESIGNED AND DETAILED BY:
DELTA
ENGINEERS, ARCHITECTS, & LAND SURVEYORS
860 HOOPER ROAD, ENDWELL, NY 13760-1564
TEL: (607) 231-6600 FAX: (607) 231-6650

VT 100 Road Culvert Duxbury, Vermont

Anchor Details

Scale: AS SHOWN

Checked by:

Drawn by: GSC

Designed by: DELTA

Project No. 7347

Date: 6/29/16

PREPARED FOR:
MICHIE CORPORATION, INC.
173 BUXTON INDUSTRIAL DRIVE-PO BOX 870
HANOVER, NH 03755
PHONE: 603-428-3218
FAX: 603-428-7426

DWG NO.
S7.0

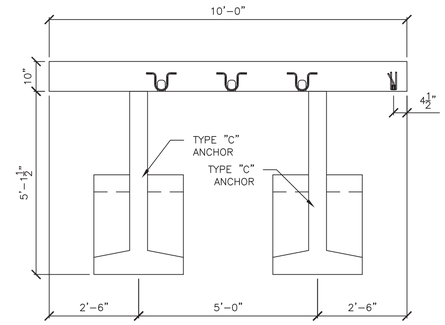

1 S6.0 WW4C PLAN VIEW
½" = 1'-0"

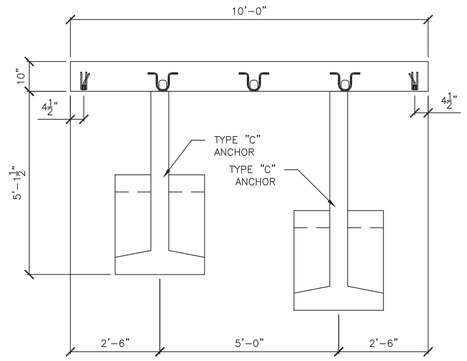

2 S6.0 WW4B PLAN VIEW
½" = 1'-0"

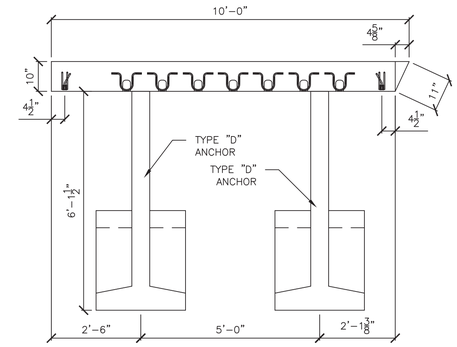

3 S6.0 WW4A PLAN VIEW
½" = 1'-0"

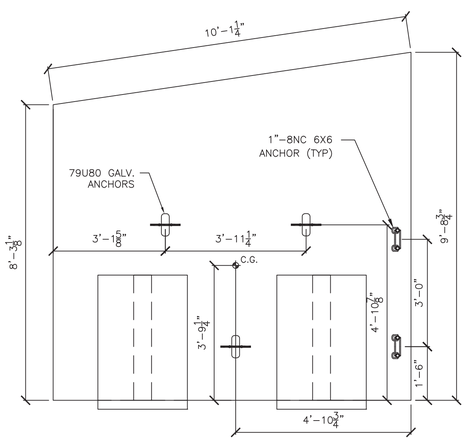

4 S6.0 WW4C ELEVATION
½" = 1'-0"

1 WW4C REQUIRED
UNIT WEIGHT AND VOLUME:
TOTAL: 15,377#
WALL: (2.78 CY)
C ANCHOR: 0.51 CY
C ANCHOR: 0.51 CY

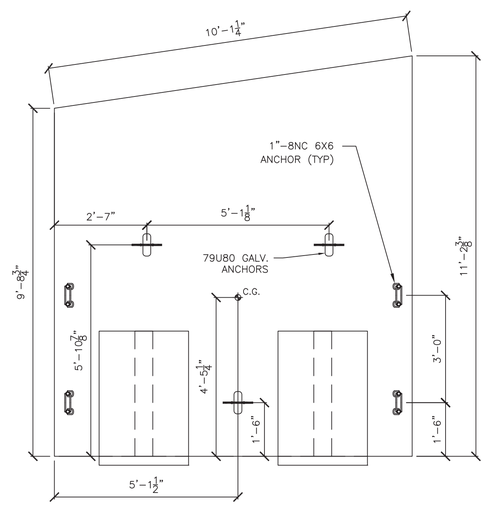

5 S6.0 WW4B ELEVATION
½" = 1'-0"

1 WW4B REQUIRED
UNIT WEIGHT AND VOLUME:
TOTAL: 17,493#
WALL: (3.23 CY)
D ANCHOR: 0.58 CY
C ANCHOR: 0.51 CY

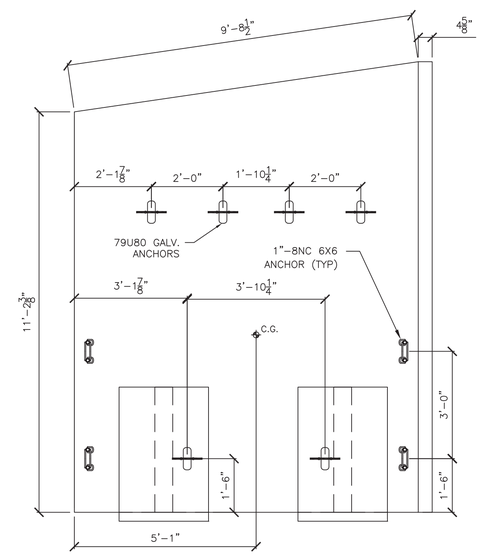

6 S6.0 WW4A ELEVATION
½" = 1'-0"

1 WW4A REQUIRED
UNIT WEIGHT AND VOLUME:
TOTAL: 19,602#
WALL: (3.68 CY)
D ANCHOR: 0.58 CY
D ANCHOR: 0.58 CY

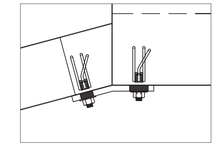

WW1 CONNECTION
165° BENT PLATE

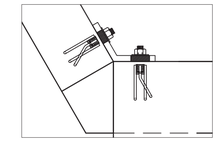

WW3 CONNECTION
120° BENT PLATE

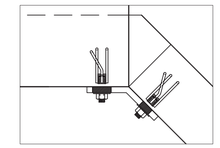

WW2 CONNECTION
135° BENT PLATE

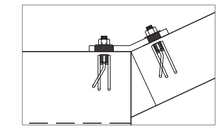

WW4 CONNECTION
155° BENT PLATE

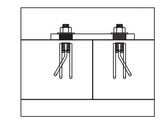

MIDWALL CONNECTION
180° PLATE

ALL CONNECTIONS USE
1" – 8NC 6X6 DOUBLE
WINGWALL ANCHORS
WITH 1" BENT PLATES

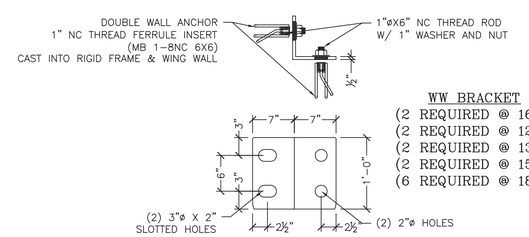

WW BRACKET
(2 REQUIRED @ 165°)
(2 REQUIRED @ 120°)
(2 REQUIRED @ 135°)
(2 REQUIRED @ 155°)
(6 REQUIRED @ 180°)

PLATES TO BE MADE OF ¾" MILD STEEL, PLASMA CUT, AND BENT AS REQUIRED. (HOT DIPPED GALVANIZED AFTER BENDING)

3 S5.0 WINGWALL BRACKET DETAIL
1" = 1'-0"

No.	Date	Revision	By

STATE OF VERMONT
REGISTERED PROFESSIONAL ENGINEER
No. 9031
Structural
Licensed
7/6/16

DESIGNED AND DETAILED BY:
DELTA
ENGINEERS, ARCHITECTS, & LAND SURVEYORS
860 HOOPER ROAD, ENDWELL, NY 13760-1564
TEL. (607) 231-6600 FAX: (607) 231-6650

VT 100 Road Culvert
Duxbury, Vermont

Wingwall Details

Scale: AS SHOWN
Checked by:
Drawn by: GSC
Designed by: DELTA
Project No. 7347
Date: 6/20/16

PREPARED FOR:
MICHIE CORPORATION, INC.
173 BUXTON INDUSTRIAL DRIVE-PO BOX 870
HOOSICK FALLS, NY 12090
PHONE: 603-428-3218
FAX: 603-428-7426

DWG NO.
S6.0

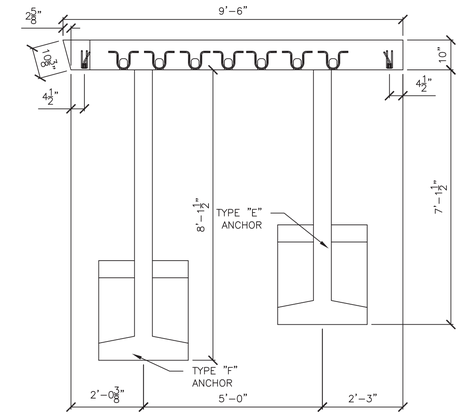

1 S5.0 WW1A PLAN VIEW
½" = 1'-0"

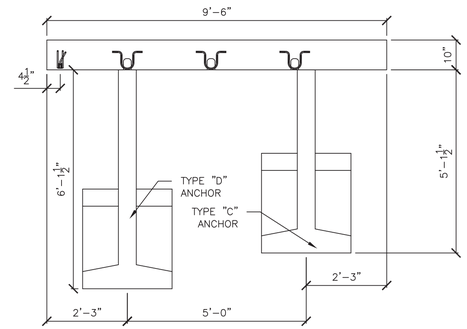

2 S5.0 WW1B PLAN VIEW
½" = 1'-0"

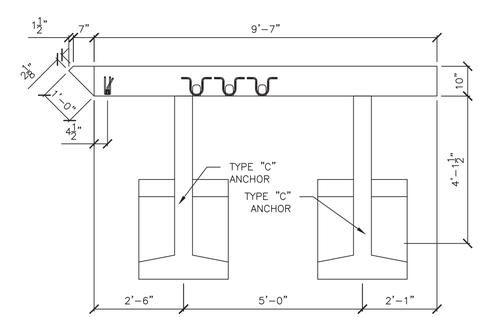

3 S5.0 WW2A PLAN VIEW
½" = 1'-0"

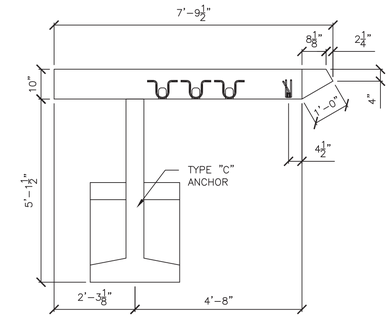

4 S5.0 WW3A PLAN VIEW
½" = 1'-0"

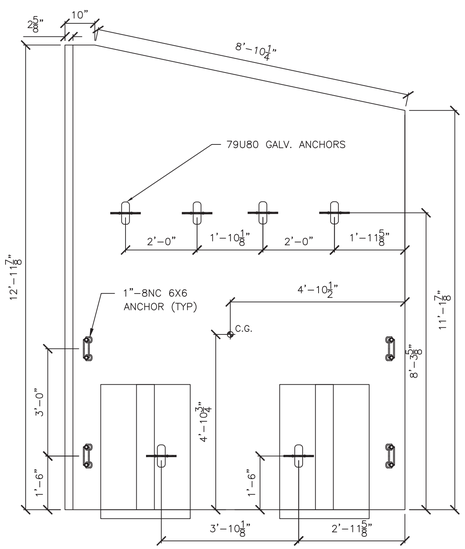

5 S5.0 WW1A ELEVATION
½" = 1'-0"

1 WW1A
REQUIRED
UNIT WEIGHT AND VOLUME:
TOTAL: 19,903#
WALL: (3.56 CY)
F ANCHOR: 0.71 CY
E ANCHOR: 0.64 CY

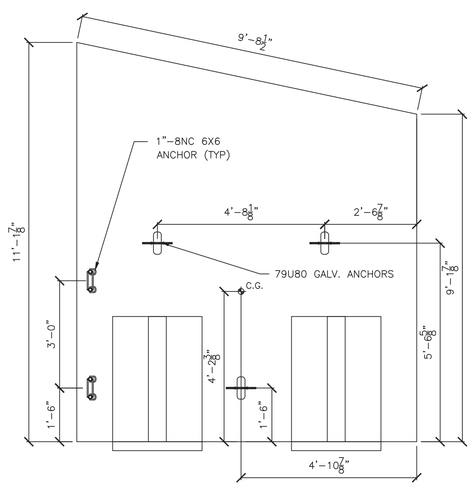

6 S5.0 WW1B ELEVATION
½" = 1'-0"

1 WW1B
REQUIRED
UNIT WEIGHT AND VOLUME:
TOTAL: 16,478#
WALL: (2.98 CY)
D ANCHOR: 0.58 CY
C ANCHOR: 0.51 CY

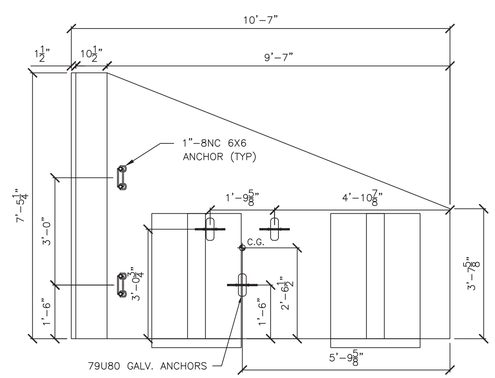

7 S5.0 WW2A ELEVATION
½" = 1'-0"

1 WW2A
REQUIRED
UNIT WEIGHT AND VOLUME:
TOTAL: 11,688#
WALL: (1.87 CY)
C ANCHOR: 0.51 CY
C ANCHOR: 0.51 CY

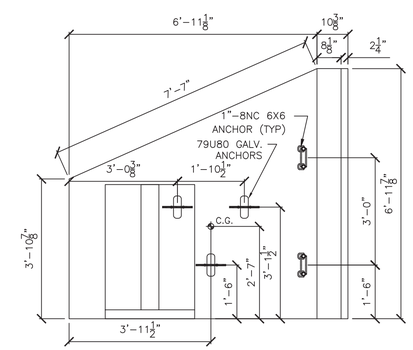

8 S5.0 WW3A ELEVATION
½" = 1'-0"

1 WW3A
REQUIRED
UNIT WEIGHT AND VOLUME:
TOTAL: 7,540#
WALL: (1.35 CY)
C ANCHOR: 0.51 CY

No.	Date	Revision	By

STATE OF VERMONT
WILLIAM R. DUNCAN
No. 9031
Structural I
Licensed
PROFESSIONAL ENGINEER
7/6/16

DESIGNED AND DETAILED BY:
DELTA
ENGINEERS, ARCHITECTS, & LAND SURVEYORS
860 HOOPER ROAD, ENDWELL, NY 13760-1564
TEL. (607) 231-6600 FAX: (607) 231-6650

VT 100 Road Culvert
Duxbury, Vermont

Wingwall Details

Scale: AS SHOWN
Checked by:
Drawn by: GSC
Designed by: DELTA
Project No. 7347
Date: 6/29/16

PREPARED FOR:
MICHIE CORPORATION, INC.
173 BUXTON INDUSTRIAL DRIVE-PO BOX 870
MONTPELIER, VT 05602
PHONE: 603-428-3218
FAX: 603-428-7426

DWG NO.
S5.0

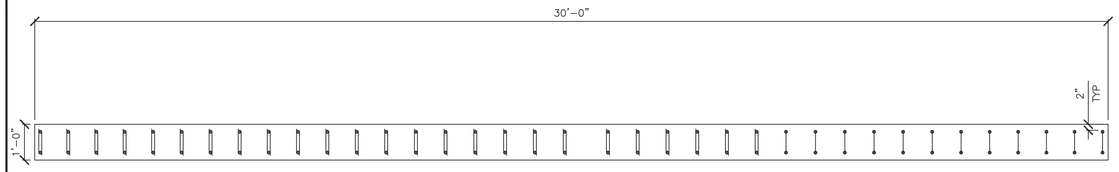

1 S4.0 INLET HEAD WALL PLAN VIEW
½" = 1'-0"

HW2 ONE REQUIRED
EACH PIECE WEIGHS: 11,300 LB
HEAD WALL: 2.79 CY

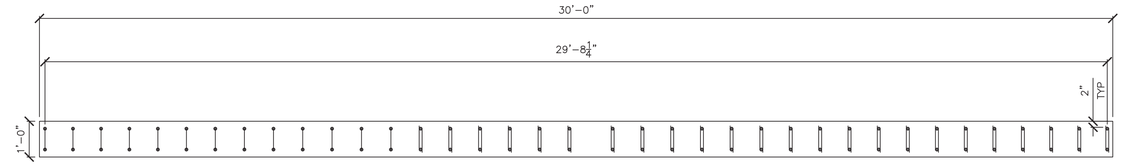

2 S4.0 OUTLET HEAD WALL PLAN VIEW
½" = 1'-0"

HW1 ONE REQUIRED
EACH PIECE WEIGHS: 11,016 LB
HEAD WALL: 2.72 CY

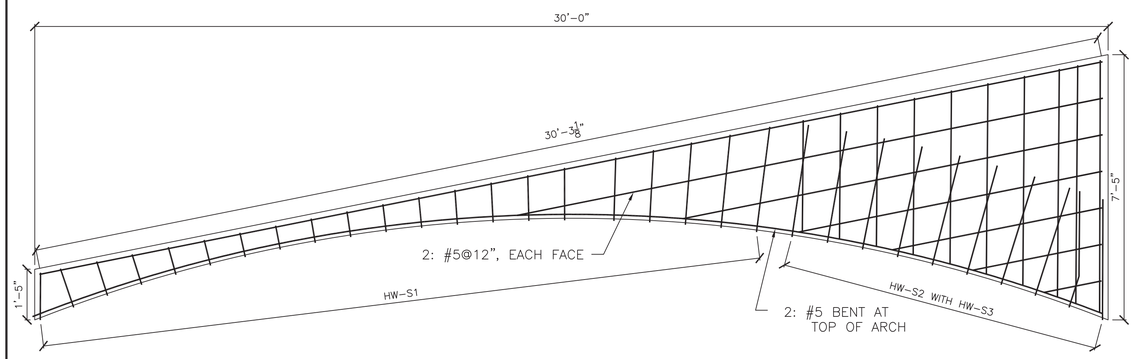

3 S4.0 INLET HEAD WALL ELEVATION VIEW (HW2)
½" = 1'-0"

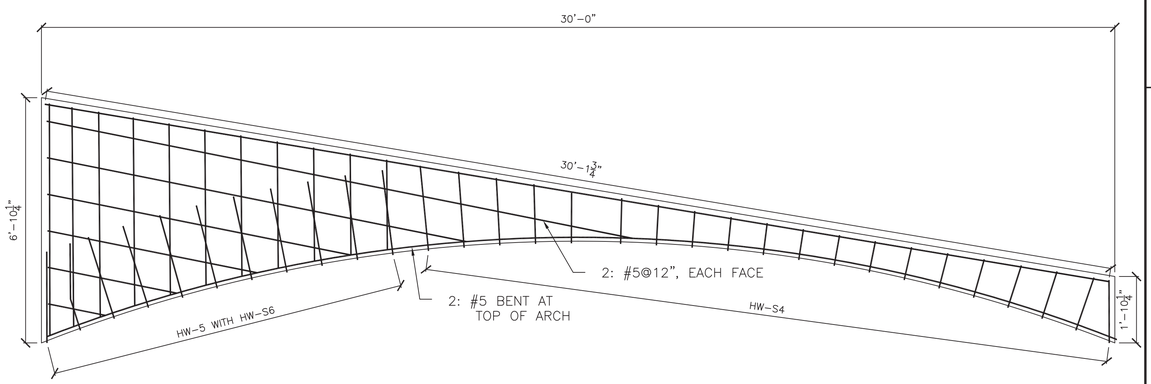

4 S4.0 OUTLET HEAD WALL ELEVATION VIEW (HW1)
½" = 1'-0"

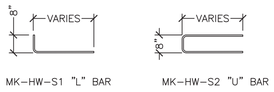

MK-HW-S1 "L" BAR MK-HW-S2 "U" BAR

INLET HW2 REINFORCING SCHEDULE				
BAR MARK	TYPE	SIZE/SPACING	CUT LENGTH	# OF PCS
MK-HW-S1	BENT	#5@10"	1'-4 3/16" TO 3'-7½"	21
MK-HW-S2	BENT	#5@10"	6'-11½" TO 14'-9¼"	10
MK HW-S3	STRAIGHT DWL IN	#5	3'-2"	20

ALL REBAR TO BE EPOXY COATED

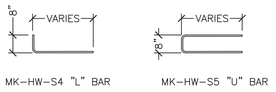

MK-HW-S4 "L" BAR MK-HW-S5 "U" BAR

OUTLET HW1 REINFORCING SCHEDULE				
BAR MARK	TYPE	SIZE/SPACING	CUT LENGTH	# OF PCS
MK-HW-S4	BENT	#5@10"	1'-6½" TO 3'-0¾"	27
MK-HW-S5	BENT	#5@10"	5'-8½" TO 13'-7½"	11
MK HW-S6	STRAIGHT DWL IN	#5	3'-2"	22

ALL REBAR TO BE EPOXY COATED

No.	Date	Revision	By

STATE OF VERMONT
DARYL D. BURNS
No. 9031
Structural I
LICENSED PROFESSIONAL ENGINEER
7/6/16

DESIGNED AND DETAILED BY:
DELTA
ENGINEERS, ARCHITECTS, & LAND SURVEYORS
860 HOOPER ROAD, ENDWELL, NY 13760-1564
TEL: (607) 231-6600 FAX: (607) 231-6650

VT 100 Road Culvert
Duxbury, Vermont

Head Wall Details

Project No. 7347
Date: 6/29/16
Designed by: DELTA
Drawn by: GSC
Checked by:
Scale: AS SHOWN

PREPARED FOR:
MICHIE
MICHIE CORPORATION, INC.
173 BUXTON INDUSTRIAL DRIVE-PO BOX 870
HENNIKER, NH 03242
PHONE: 603-428-3218
FAX: 603-428-7426

DWG NO.
S4.0

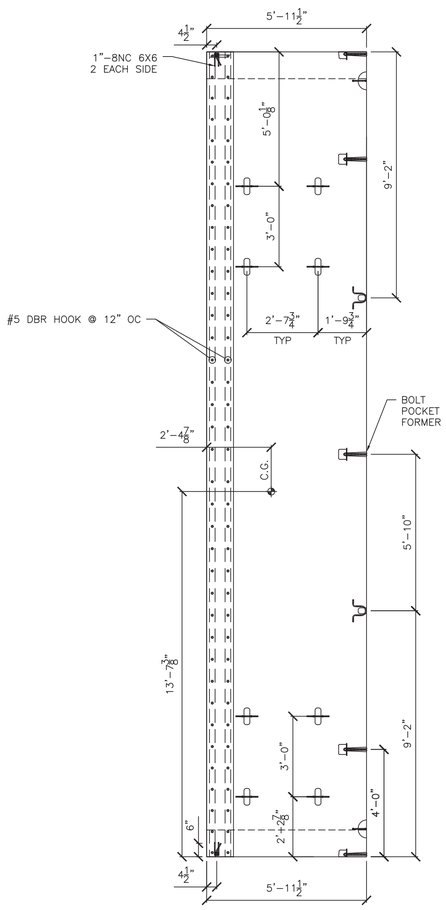

1 S3.0 AC-1 PLAN VIEW
⅜" = 1'-0"

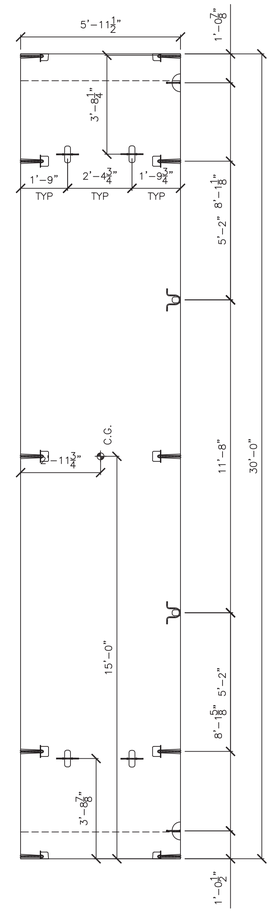

2 S3.0 AC-2 PLAN VIEW
⅜" = 1'-0"

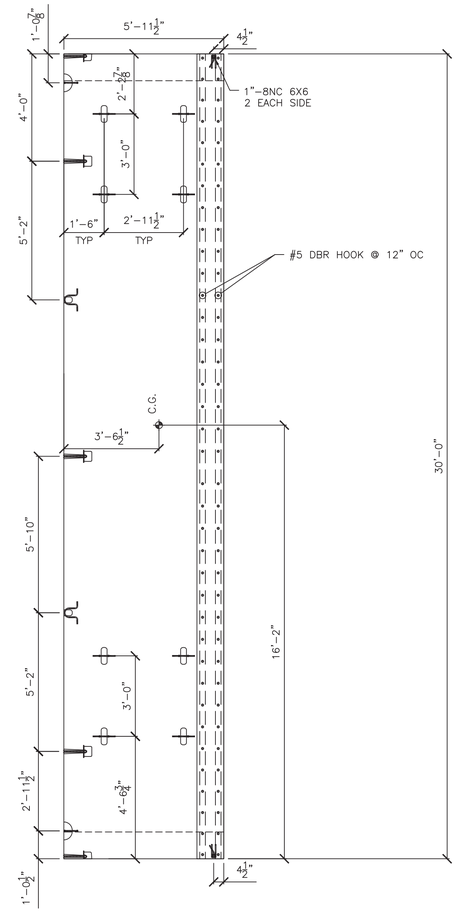

3 S3.0 AC-3 PLAN VIEW
⅜" = 1'-0"

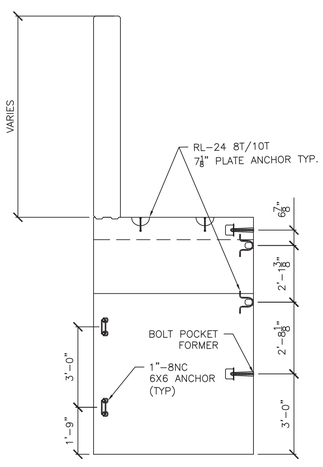

4 S3.0 AC-1 ELEVATION VIEW

AC-1: 1 REQ'D
UNIT WEIGHT AND VOLUME:
CULVERT: 9.24 CY (37,422#)
HEADWALL: 2.79 CY (11,300#)

TOTAL WEIGHT: 48,722#

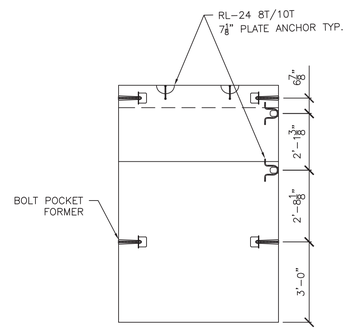

5 S3.0 AC-2 ELEVATION VIEW
⅜" = 1'-0"

AC-2: 22 REQ'D
UNIT WEIGHT AND VOLUME:
CULVERT: 9.24 CY (37,422#)

TOTAL WEIGHT: 37,422#

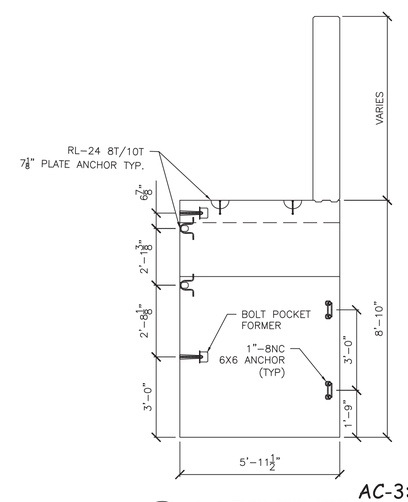

6 S3.0 AC-3 ELEVATION VIEW
⅜" = 1'-0"

AC-3: 1 REQ'D
UNIT WEIGHT AND VOLUME:
CULVERT: 9.24 CY (37,422#)
HEADWALL: 2.71 CY (11,016#)

TOTAL WEIGHT: 48,438#

No.	Date	Revision	By

STATE OF VERMONT
Steven D. Wright
No. 9931
Structural I
Licensed PROFESSIONAL ENGINEER
7/6/16

DESIGNED AND DETAILED BY:
DELTA
ENGINEERS, ARCHITECTS, & LAND SURVEYORS
860 HOOPER ROAD, ENDWELL, NY 13760-1564
TEL: (607) 231-6600 FAX: (607) 231-6650

VT 100 Road Culvert
Duxbury, Vermont

Culvert Plans And Elevations

Project No. 7347
Date: 6/29/16
Designed by: DELTA
Drawn by: GSC
Checked by:
Scale: AS SHOWN

PREPARED FOR:
MICHIE CORPORATION, INC.
173 BUXTON INDUSTRIAL DRIVE-PO BOX 870
HINSDALE, NH 03451
PHONE: 603-428-3218
FAX: 603-428-7426

DWG NO.
S3.0

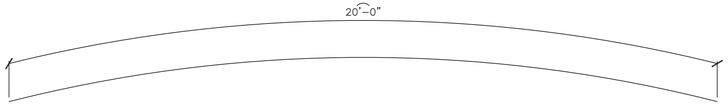

A1
(UNBENT = 20'-0")

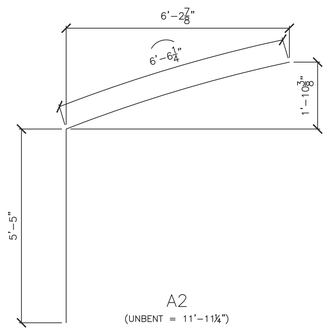

A2
(UNBENT = 11'-11¼")

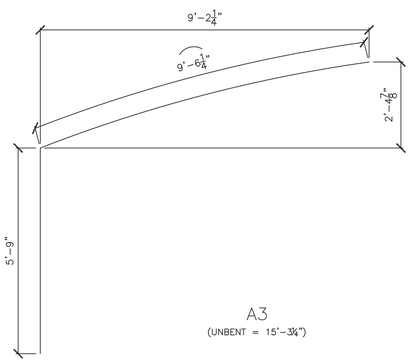

A3
(UNBENT = 15'-3¼")

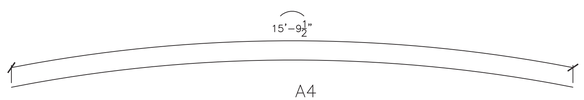

A4
(UNBENT = 15'-9½")

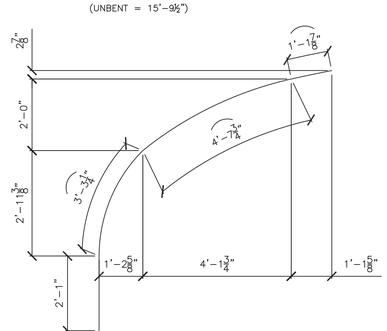

A5
(UNBENT = 11'-2")

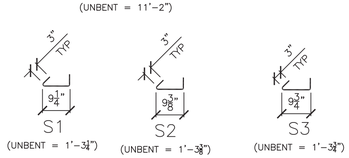

S1 (UNBENT = 1'-3¼") S2 (UNBENT = 1'-3⅜") S3 (UNBENT = 1'-3¾")

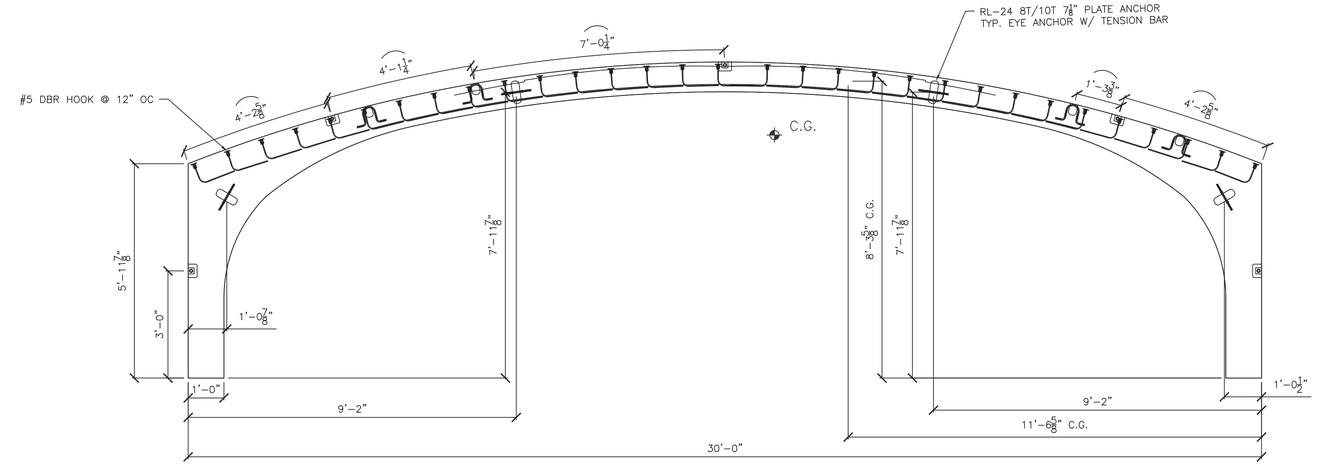

1 S2.0 ELEVATION VIEW
⅜" = 1'-0"

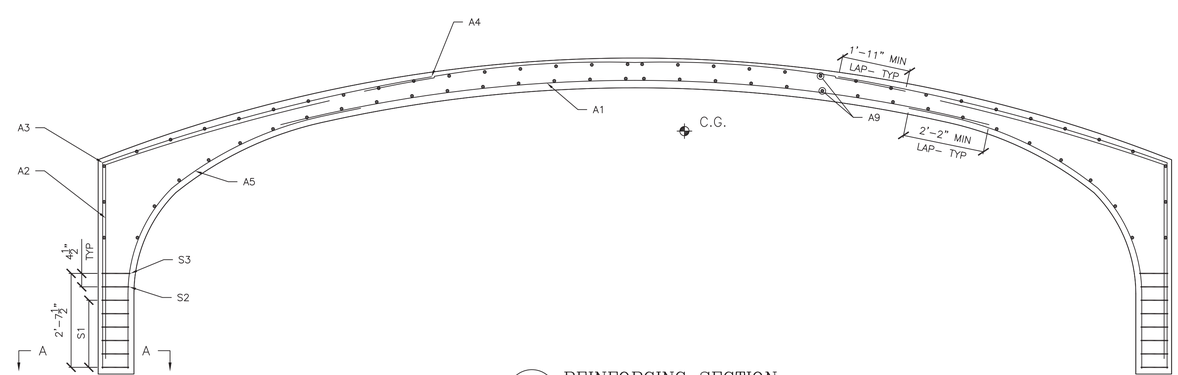

2 S2.0 REINFORCING SECTION
⅜" = 1'-0"

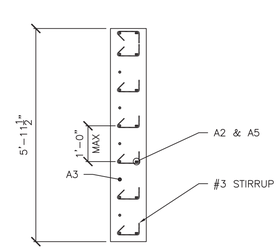

SECTION A-A

REINFORCING SCHEDULE				
BAR MARK	TYPE	SIZE/SPACING	CUT LENGTH	# OF PCS
A1	RADIUS	#6@5"	20'-0"	15
A2	L	#5@5"	11'-11¼"	30
A3	L	#6@5"	15'-3¼"	30
A4	RADIUS	#4@10"	15'-9½"	7
A5	L	#5@10"	11'-2"	7/LEG
A9	STRAIGHT	#4@12"	5'-7½"	52
S1	STIRRUP	#3@4½"	1'-3¼"	42/LEG
S2	STIRRUP	#3@4½"	1'-3⅜"	7/LEG
S3	STIRRUP	#3@4½"	1'-3¾"	7/LEG

No.	Date	Revision	By

STATE OF VERMONT
Kevin S. Kennedy
No. 9031
Structural I
LICENSED PROFESSIONAL ENGINEER
7/6/16

DESIGNED AND DETAILED BY:
DELTA
ENGINEERS, ARCHITECTS, & LAND SURVEYORS
860 HOOPER ROAD, ENDWELL, NY 13760-1564
TEL. (607) 231-6600 FAX: (607) 231-6650

VT 100 Road Culvert
Duxbury, Vermont

Culvert Section and Elevation

Scale: AS SHOWN
Checked by:
Drawn by: GSC
Designed by: DELTA
Project No. 7347
Date: 6/29/16

PREPARED FOR:
MICHIE CORPORATION, INC.
173 BUXTON INDUSTRIAL DRIVE-PO BOX 870
ALTON, NH 03809-0870
PHONE: 603-428-3218
FAX: 603-428-7428

DWG NO.
S2.0