REVIEWED
By Jim Wild (jim.wild@state.vt.us) at 2:24 pm, Jul 08, 2016

Proposed Bridge Improvement Project

DUXBURY BF 013-4(47) - RTE 100

Precast Footings with Stem Walls

curing procedure

Concrete:

Mix Designation: P60TER

1. Specified Mix Design	5000 PSI
2. Proposed Mix Design	6000 PSI
3. Stripping/Handling Strength	3000 PSI
4. Shipping Strength	5000 PSI
5. Install Strength	5000 PSI
6. Traffic Loading	5000 PSI

Fabrication Tolerances:

1. Width	±1/4"
2. Height	±1/4"
3. Length	±1/2"
4. Rebar Cover	3" ~~2"~~ Min. (Unless Noted Otherwise)
5. Rebar Spacing	±1/2"
6. Rebar Clearance	±1/4"
7. Insert Placement	±1/4"

Design Notes:

1. Built in accordance to PCI MNL135 & VT AOT spec 540.
2. All overall footing & stem wall dimensions and reinforcing is per sheets 5,42,43,44,45,& 46 of the state plan sheets.
3. SDI has not performed any design work for these pieces other than lifting calculations.

section 507 is every intersection for spacing 12" and over

Reinforcing:

are these loose pieces being provided by SD Ireland or the Contractor?

Provide steel grades/ASTM spec

General Notes:

1. Reinforing Steel - Precast Footing Sections shall be Level I Black Bar ASTM A615.
2. Bar tied at every intersection for all exterior intersections and tied at every other intersection for all other locations.
3. (2) 5' long pieces of bar will be provided for each bar size for testing.

Tolerances:

1. Spacing	±1/2"
2. Clearance	±1/4"

Lap Lengths: (If Needed)

1. Per AASHTO 5.11.2.1.1 & 5.11.5.3.1

Lap Length for Level I (Plain):

#4 Bar	21"
#5 Bar	26"
#6 Bar	31"

I don't have the plans but is the silane applied on site?

Water Repellent, Silane required per Plan Set General note 16

Provide grouting procedure per Subsection 540.04. Are the PVC sleeves through the footings for grouting or for doweling into bedrock?

Miscellaneous:

provide galvanized for compatibility with galvanized plate in preformed pocket

1. All bolt pocket hardware to be domestic 1" Ø ~~black~~ coil rod w/ nuts at each end.
2. All rebar, lift anchors, and mechanical joint hardware to be made in USA
3. ~~No concrete sealer required~~
4. All rebar chairs and spacers will be PVC
5. All vertical construction joints to be match-cast. {or provide alternate construction joint detail to accommodate cumulative alignment, length, and elevation tolerances}

1. Installing contractor to offload and set in place with appropriate rated crane & rigging.
2. Contractor to shim under precast footings as needed to maintain final lines and grades.
3. Contractor to grout under footings prior to the installation of the precast arch.

with Mortar, Type IV

4. Contractor to install Sheet Membrane Waterproofing, Preformed Sheet in accordance with section 540 and the Contract Plans.

5. All lift device recesses and bolt pockets to be grouted with Mortar, Type IV after installation in accordance with Subsection 540.11.

General comments applicable throughout Fabrication Drawings:

1) Plan view geometry of individual members near wingwall/arch corners need additional dimensions to fully layout and fabricate.

2) Provide at least 2 connections per vertical construction joint - consider either bent plates or placement of the bolted connection on top of the footing.

3) Need to provide reinforcement layout within precast elements near wingwall/arch footing corners.

4) If the pedestal walls and footings are not cast monolithically, provide a horizontal construction joint in accordance with Structures Detail sheet SD-501.00.

STATE OF VERMONT
ERIC CALDERWOOD
NO. 8711
Structural
LICENSED
PROFESSIONAL ENGINEER

Vermont Agency of Transportation
RECEIVED
CK'D BY TYLin/KMH OK'D BY KMH
July 1, 2016
RESUBMIT Yes Rejected
BY kristin M. Higgins DATE 07/11/2016

T.Y. LIN INTERNATIONAL

CONTRACTORS VTSPE:	PRECAST CONCRETE BOX CULVERT SHOP DRAWINGS (SDI JOB #17682)		INSTALLER: J.A. MCDONALD 585 Gilman Rd Lyndon Ctr, VT 05850	FABRICATOR: 193 INDUSTRIAL AVE. WILLISTON, VT 05495 Ph: (802) 658-0201
	SUPERVISOR: E. Barendse DETAILER: I. ADAMS CHECKER: E. Barendse	PROJECT NAME: DUXBURY PROJECT #: BF 013-4(47) LOCATION: DUXBURY, VT	06/28/16	TEXT

SD Ireland PRECAST

1_OF_8

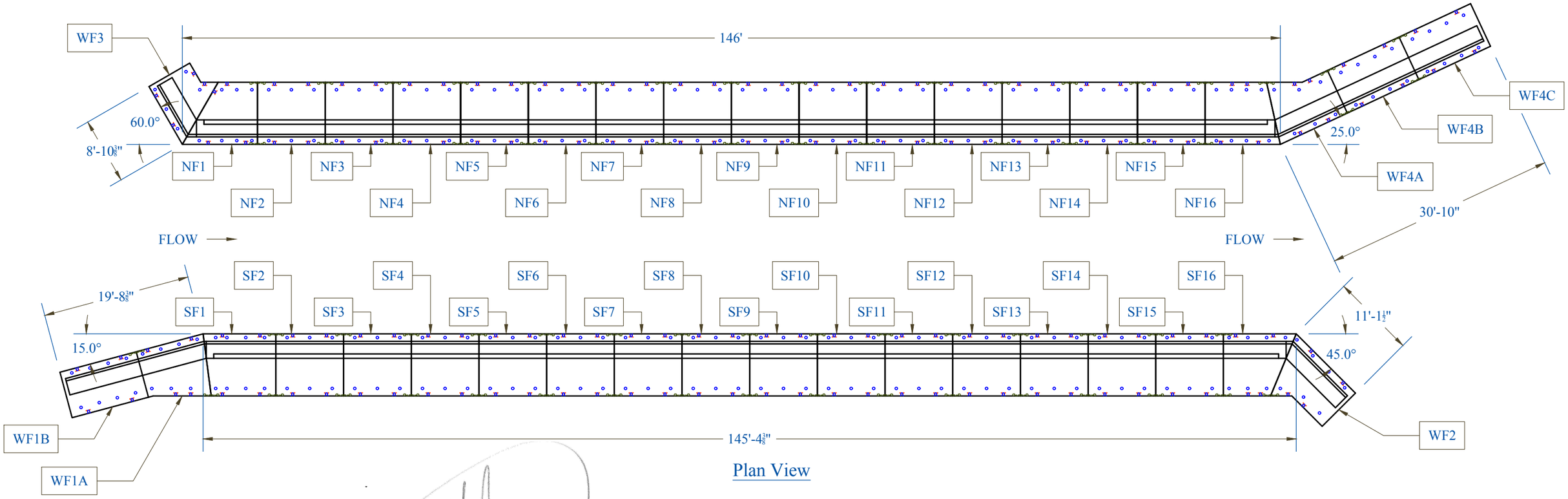

Plan View

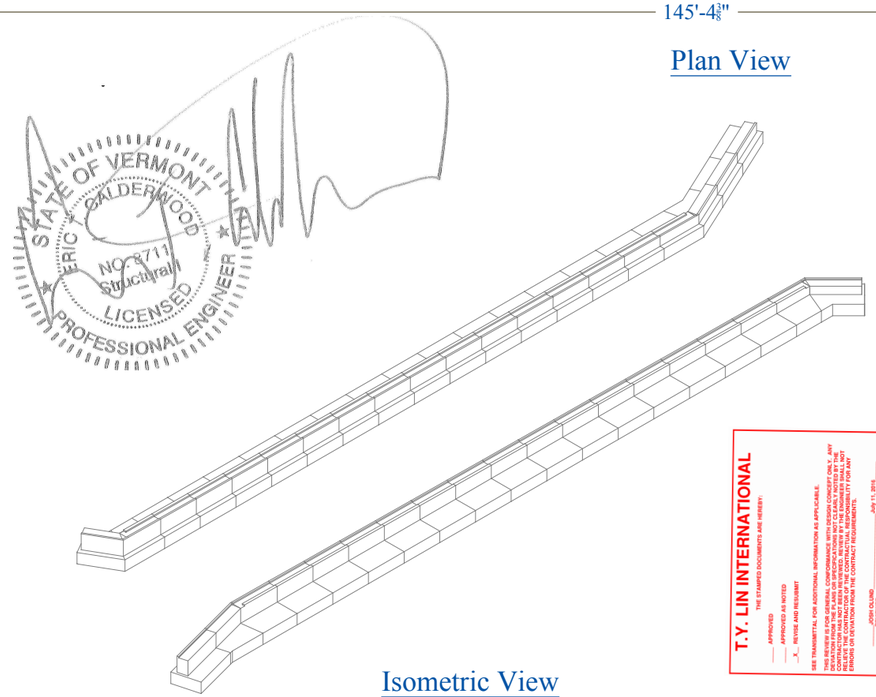

Isometric View

Elevations		
Location	Inlet Elev.	Outlet Elev.
Bottom of Footing	486.00	486.00
Top of Keyway	491.76	490.32
Top of Pedestal Wall	492.01	490.57

Table of Units

Mark	Vol.(yd^3)	Weight(lbs)	Mark	Vol.(yd^3)	Weight(lbs)	Mark	Vol.(yd^3)	Weight(lbs)
NF1	8.24	39,960	NF14	8.50	34,000	SF11	8.70	34,800
NF2	9.30	37,200	NF15	8.44	33,760	SF12	8.64	34,560
NF3	9.24	36,960	NF16	8.51	34,040	SF13	8.57	34,280
NF4	9.17	36,680	SF1	9.57	38,280	SF14	8.50	34,000
NF5	9.10	36,400	SF2	9.30	37,200	SF15	8.44	33,760
NF6	9.03	36,120	SF3	9.24	36,960	SF16	7.53	30,120
NF7	8.97	35,880	SF4	9.17	36,680	WF1A	8.25	33,000
NF8	8.90	35,600	SF5	9.10	36,400	WF1B	8.82	35,280
NF9	8.84	35,360	SF6	9.03	36,120	WF2	7.46	29,840
NF10	8.77	35,080	SF7	8.97	35,880	WF3	6.26	25,040
NF11	8.70	34,800	SF8	8.90	35,600	WF4A	7.17	28,680
NF12	8.64	34,560	SF9	8.84	35,360	WF4B	7.70	30,800
NF13	8.57	34,280	SF10	8.77	35,080	WF4C	7.62	30,480

STATE OF VERMONT
ERIC T. CALDERWOOD
No. 8711
Structural
LICENSED
PROFESSIONAL ENGINEER

T.Y. LIN INTERNATIONAL
THE STAMPED DOCUMENTS ARE HEREBY:
___ APPROVED
___ APPROVED AS NOTED
_X_ REVISE AND RESUBMIT
THE TRANSMITTAL FOR ADDITIONAL INFORMATION AS APPLICABLE.
THE REVIEW OF THESE DOCUMENTS DOES NOT RELIEVE THE CONTRACTOR FROM ANY DEVIATION FROM THE PLANS OR SPECIFICATIONS NOT CLEARLY NOTED BY THE REVIEWER. THE REVIEW DOES NOT RELIEVE THE CONTRACTOR OF THE CONTRACT, NOR RELIEVE THE CONTRACTOR OF THE CONTRACTUAL RESPONSIBILITY FOR ANY ERRORS OR OMISSIONS IN THE CONTRACT REQUIREMENTS.
JOHN D. LUND ____ JULY 1, 2016
REVIEWER ____ DATE

CONTRACTORS VTSPE:

Vermont Agency of Transportation
RECEIVED
CK'D BY TYLin/KMH OK'D BY KMH
July 1, 2016
RESUBMIT Yes Rejected
BY kristin M. Higgins DATE 07/11/2016

PRECAST CONCRETE BOX CULVERT SHOP DRAWINGS (SDI JOB #17682)

SUPERVISOR: E. Barendse
DETAILER: I. ADAMS
CHECKER: E. Barendse

PROJECT NAME: DUXBURY
PROJECT #: BF 013-4(47)
LOCATION: DUXBURY, VT

INSTALLER:
J.A. MCDONALD
585 Gilman Rd
Lyndon Ctr, VT 05850

FABRICATOR:
193 INDUSTRIAL AVE.
WILLISTON, VT 05495
Ph: (802) 658-0201

SD Ireland PRECAST

06/28/16 PLAN 2_OF_8

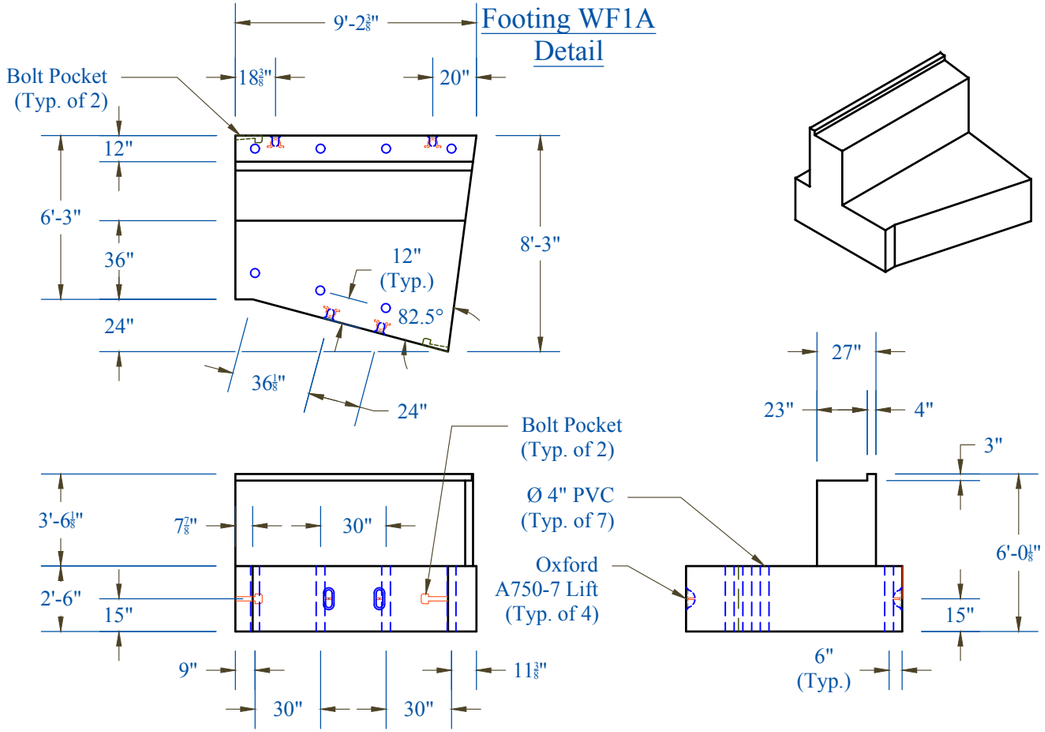

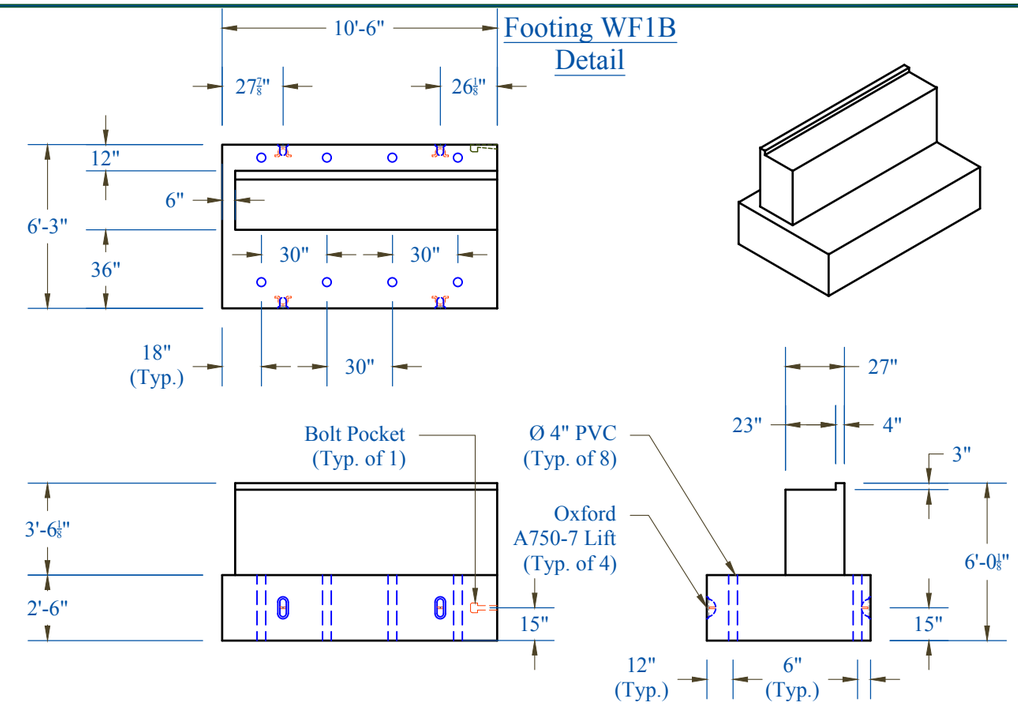

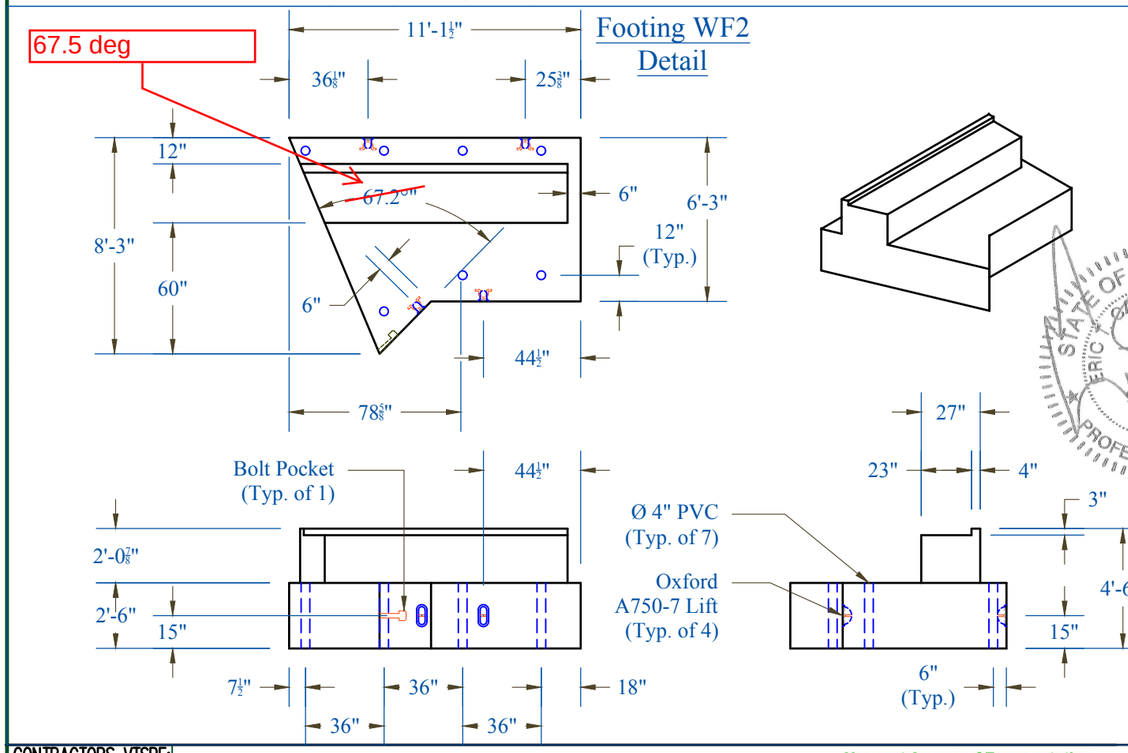

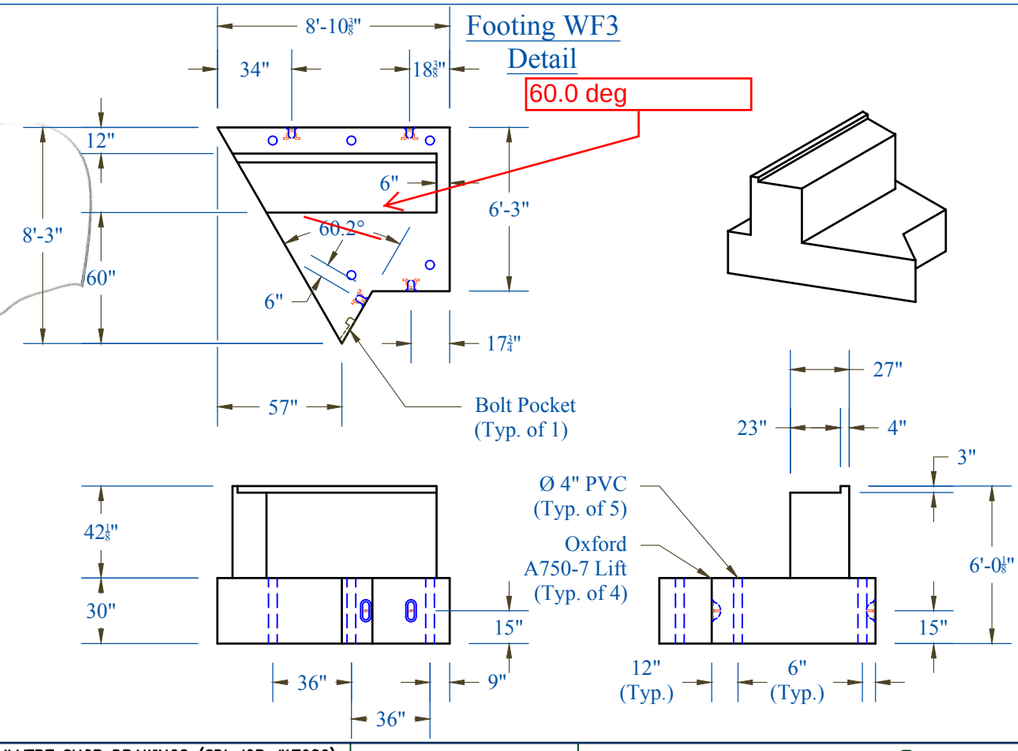

T.Y. LIN INTERNATIONAL
THE STAMPED DOCUMENTS ARE HEREBY:
APPROVED
APPROVED AS NOTED
X REVISE AND RESUBMIT
SEE TRANSMITTAL FOR ADDITIONAL INFORMATION AS APPLICABLE.
THIS REVIEW IS FOR GENERAL CONFORMANCE WITH DESIGN CONCEPT ONLY. ANY ERRORS OR DEVIATIONS FROM THE CONTRACT REQUIREMENTS, WHICH MAY BE PRESENT IN THE REVISED, NOT BE REVIEWED, RETAIN BY THE ENGINEER SHALL NOT RELIEVE THE CONTRACTOR FROM THE RESPONSIBILITY FOR ANY ERRORS OR DEVIATION FROM THE CONTRACT REQUIREMENTS.
JOB NO.
JULY 11, 2016
DATE
JOSH CLAND
REVIEWER

STATE OF VERMONT
ERIC J. CALDERWOOD
NO. 8711
Structural
LICENSED
PROFESSIONAL ENGINEER

CONTRACTORS VTSPE:

Vermont Agency of Transportation
RECEIVED
CK'D BY TYLin/KMH OK'D BY KMH
July 1, 2016
RESUBMIT Yes Rejected
BY kristin M. Higgins DATE 07/11/2016

PRECAST CONCRETE BOX CULVERT SHOP DRAWINGS (SDI JOB #17682)

SUPERVISOR: E. Barendse
DETAILER: I. ADAMS
CHECKER: E. Barendse

PROJECT NAME: DUXBURY
PROJECT #: BF 013-4(47)
LOCATION: DUXBURY, VT

INSTALLER:
J.A. MCDONALD
585 Gilman Rd
Lyndon Ctr, VT 05850

FABRICATOR:
193 INDUSTRIAL AVE.
WILLISTON, VT 05495
Ph: (802) 658-0201

SD Ireland PRECAST

06/28/16 | WING_FOOTINGS | 3_OF_8

Footing WF4A Detail

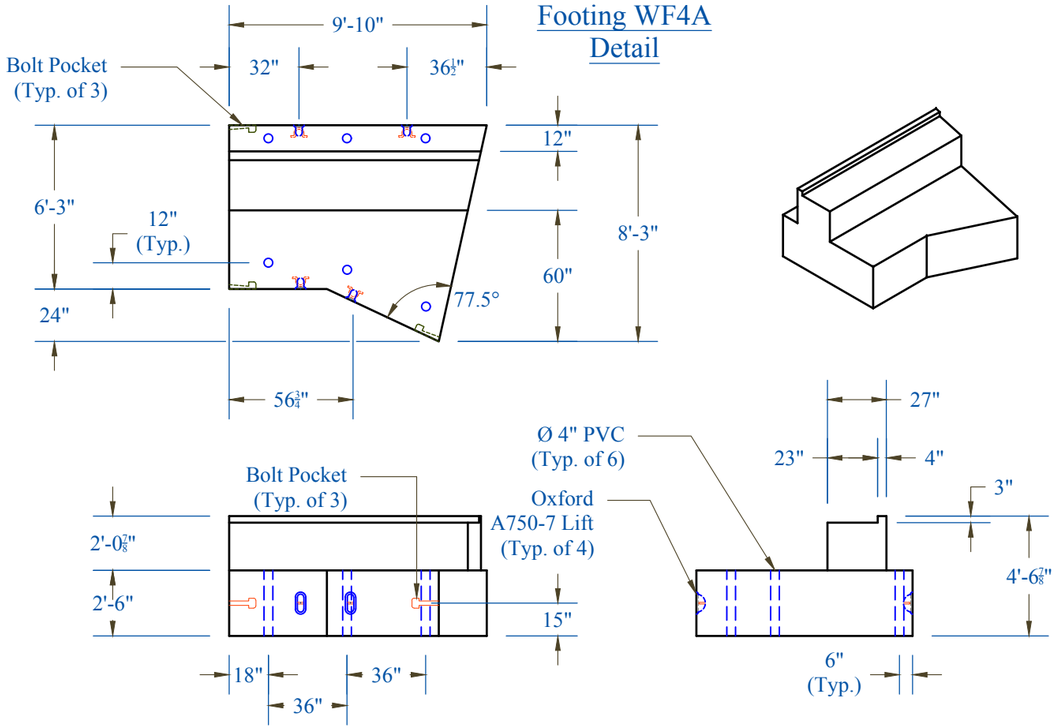

Footing WF4B Detail

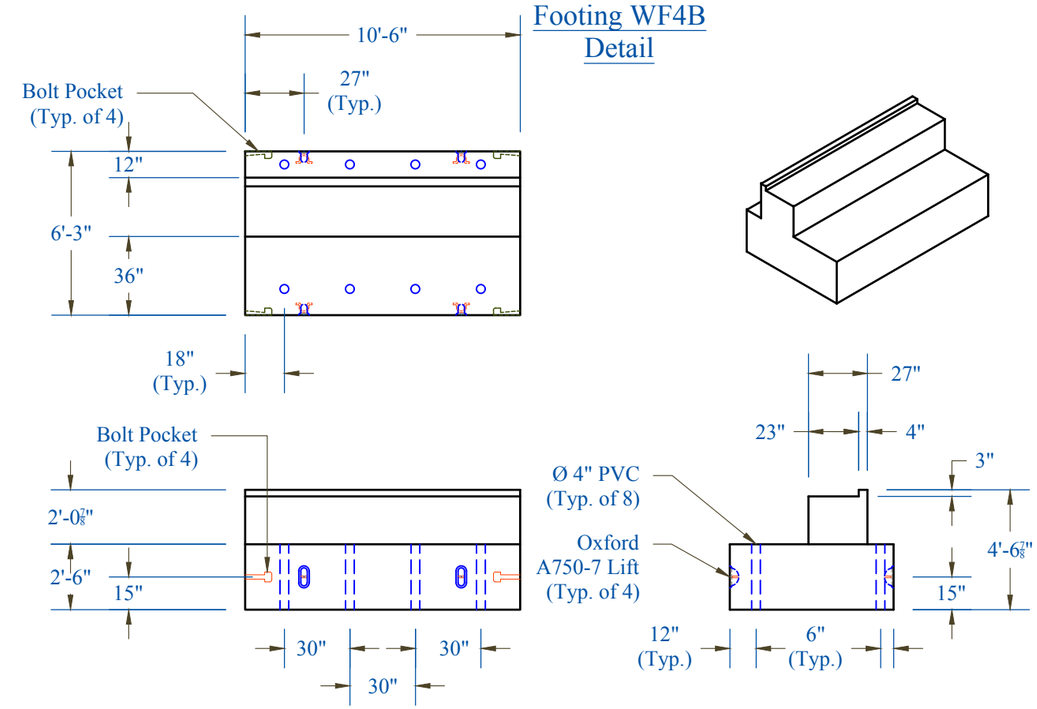

Footing WF4C Detail

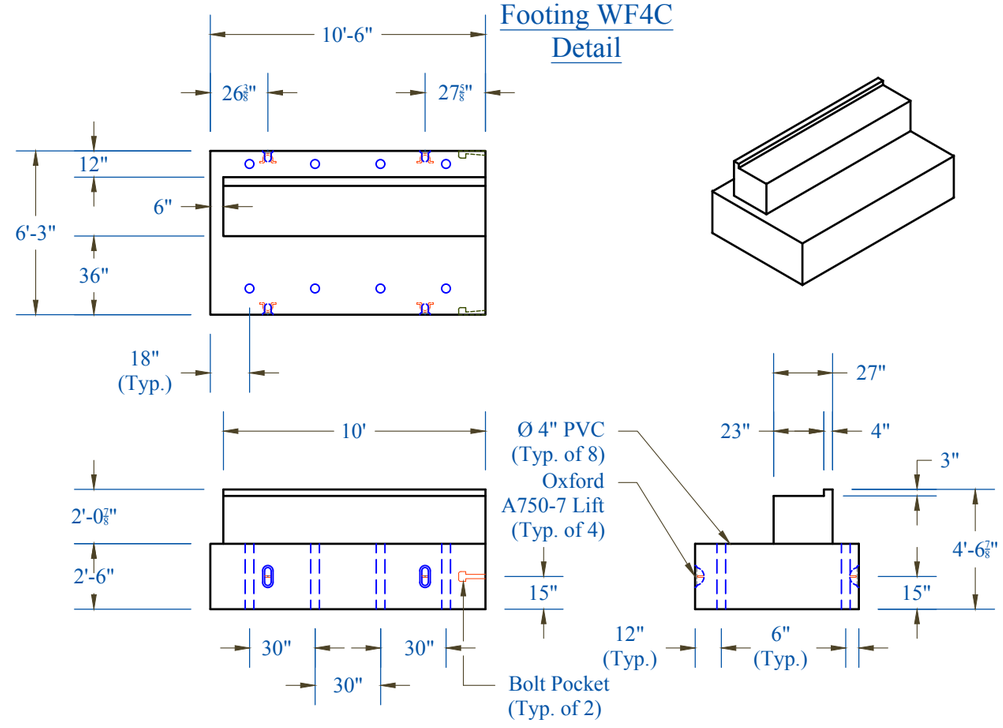

T.Y. LIN INTERNATIONAL
THE STAMPED DOCUMENTS ARE HEREBY:
APPROVED
APPROVED AS NOTED
X REVISE AND RESUBMIT
SEE TRANSMITTAL FOR ADDITIONAL INFORMATION ON APPLICABLE.
THIS REVIEW IS FOR GENERAL CONFORMANCE WITH THE DESIGN CONCEPT ONLY. ANY DEVIATION FROM THE PLANS OR SPECIFICATIONS NOT CLEARLY NOTED BY THE REVIEWER, MAY BE REQUIRED TO BE CORRECTED AT THE CONTRACTOR'S EXPENSE. THIS DOES NOT RELIEVE THE CONTRACTOR OF THE CONTRACTUAL RESPONSIBILITY FOR ANY ERRORS, OMISSIONS, OR DEVIATIONS IN THE CONTRACT DOCUMENTS.
JOSH OLIVO
REVIEWER
JULY 1, 2016
DATE

CONTRACTORS VTSPE:

Vermont Agency of Transportation
RECEIVED
CK'D BY TYLin/KMH OK'D BY KMH
July 1, 2016
RESUBMIT Yes Rejected
BY kristin M. Higgins DATE 07/11/2016

PRECAST CONCRETE BOX CULVERT SHOP DRAWINGS (SDI JOB #17682)

SUPERVISOR: E. Barendse
DETAILER: I. ADAMS
CHECKER: E. Barendse

PROJECT NAME: DUXBURY
PROJECT #: BF 013-4(47)
LOCATION: DUXBURY, VT

INSTALLER:
J.A. MCDONALD
585 Gilman Rd
Lyndon Ctr, VT 05850

FABRICATOR:
193 INDUSTRIAL AVE.
WILLISTON, VT 05495
Ph: (802) 658-0201

SD Ireland PRECAST

06/28/16 | WING_FOOTINGS | 4_OF_8

Footing Reinforcing Detail

update

Need to identify quantity of each bar mark per fabricated piece, either here or in tables on the following sheets

Rebar Schedule							
Mark	Size	Max Spacing	Length	Type	A	B	C
As1	#6	6"	~~131¼"~~	Bent	55⅛"	21" ~~"~~	~~55⅛"~~ 52.125"
As2	#6	6"	45"	Bent	12"	21"	12"
As3	#6	6"	141"	Bent	24"	93"	24"
As4	#5	12"	Varies	Str			

Note:
- 3" Clear unless noted otherwise.
- As1 to be embedded greater than the 15" min as needed OR tops cut to length, after being casted in to footing, as needed to maintain stem wall slope.
- See reinforcing note 3 for test bars.
- Cross section shown indicates the tallest stem wall.

distance between As4 to be tied away from existing concrete?

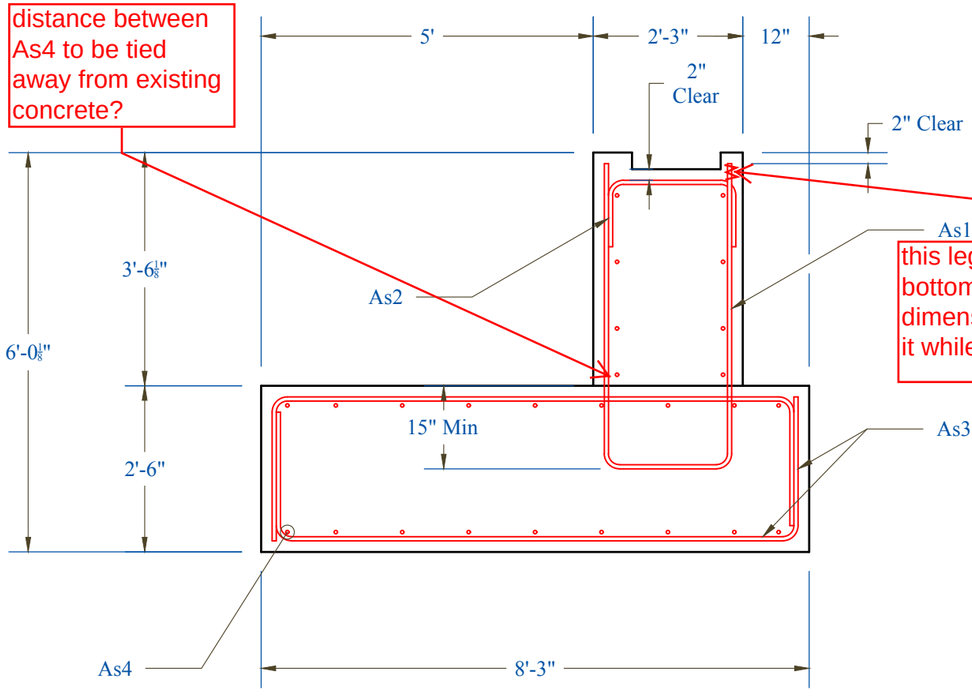

this leg of bar to be 2" clear below bottom of keyway since the 4" dimension does not allow rebar within it while still meeting clear cover

Wing Footing Reinforcing Detail

Need to identify quantity of each bar mark per fabricated piece, either here or in tables on the following sheets

125.25"

could be #5's @ 12" per Contract Plans

Rebar Schedule							
Mark	Size	Max Spacing	Length	Type	A	B	C
Bs1			~~128¼"~~	Bent	52⅛"	21"	~~55⅛"~~ 52.125"
Bs2			45"	Bent	12"	21"	12"
Bs3			117"	Bent	24"	69"	24"
Bs4	#5	12"	Varies	Str			

additional bar marks or additional bars may be needed due to geometry of footings near wingwall/ arch footing geometry

Note:
- 3" Clear unless noted otherwise.
- Bs1 ~~As1~~ to be embedded greater than the 15" min as needed OR tops cut to length, after being casted in to footing, as needed to maintain stem wall slope.
- See reinforcing note 3 for test bars.
- Cross section shown indicates the tallest stem wall.

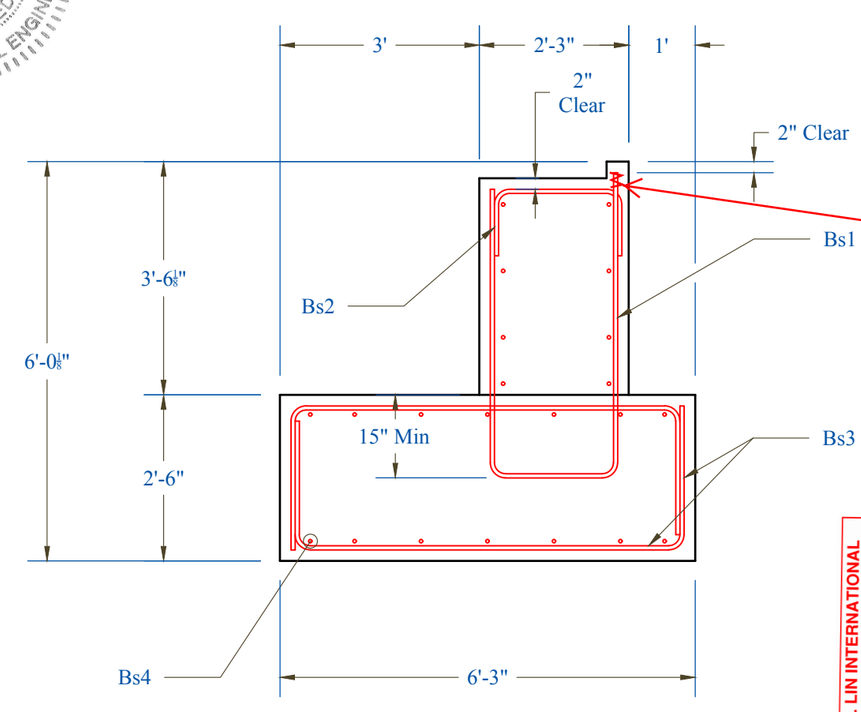

this leg of bar to be 2" clear below bottom of keyway since the 4" dimension does not allow rebar within it while still meeting clear cover

STATE OF VERMONT
ERIC T. CALDERWOOD
NO. 8711
Structural
LICENSED
PROFESSIONAL ENGINEER

T.Y. LIN INTERNATIONAL

CONTRACTORS VTSPE:

Vermont Agency of Transportation
RECEIVED
CK'D BY TYLin/KMH OK'D BY KMH
July 1, 2016
RESUBMIT Yes Rejected
BY kristin M. Higgins DATE 07/11/2016

PRECAST CONCRETE BOX CULVERT SHOP DRAWINGS (SDI JOB #17682)

SUPERVISOR: E. Barendse
DETAILER: I. ADAMS
CHECKER: E. Barendse

PROJECT NAME: DUXBURY
PROJECT #: BF 013-4(47)
LOCATION: DUXBURY, VT

INSTALLER:
J.A. MCDONALD
585 Gilman Rd
Lyndon Ctr, VT 05850

FABRICATOR:
193 INDUSTRIAL AVE.
WILLISTON, VT 05495
Ph: (802) 658-0201

SD Ireland PRECAST

06/28/16 REINFORCING 5_OF_8

Footing NF1 Detail

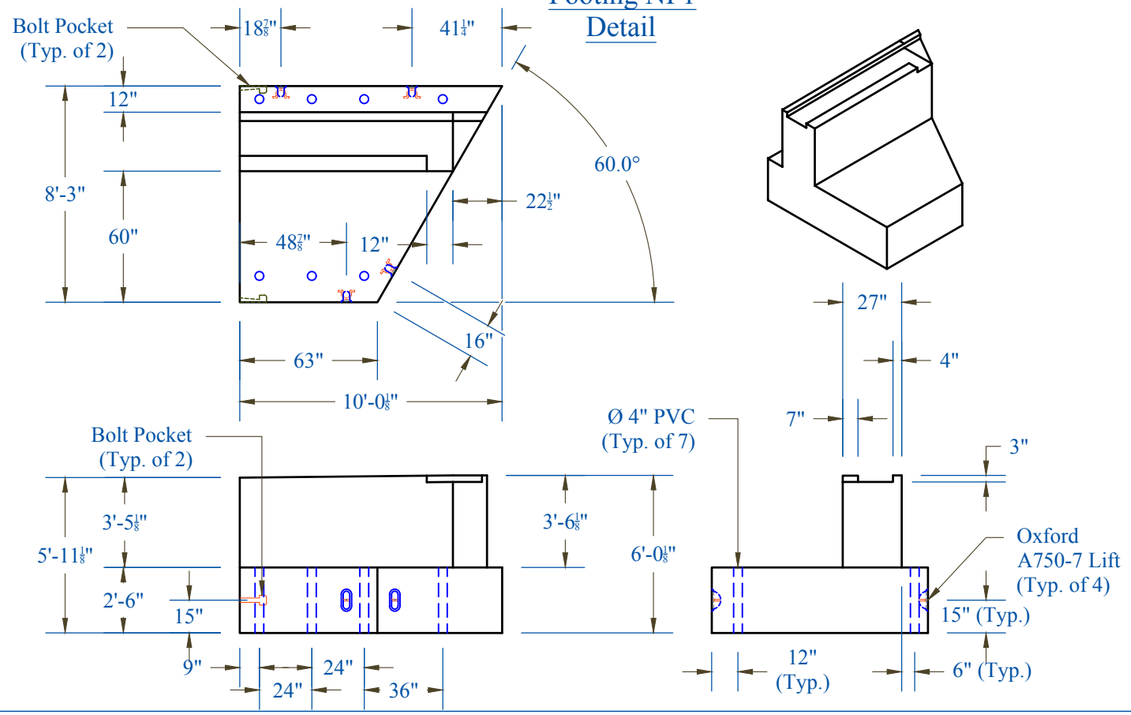

Footing NF16 Detail

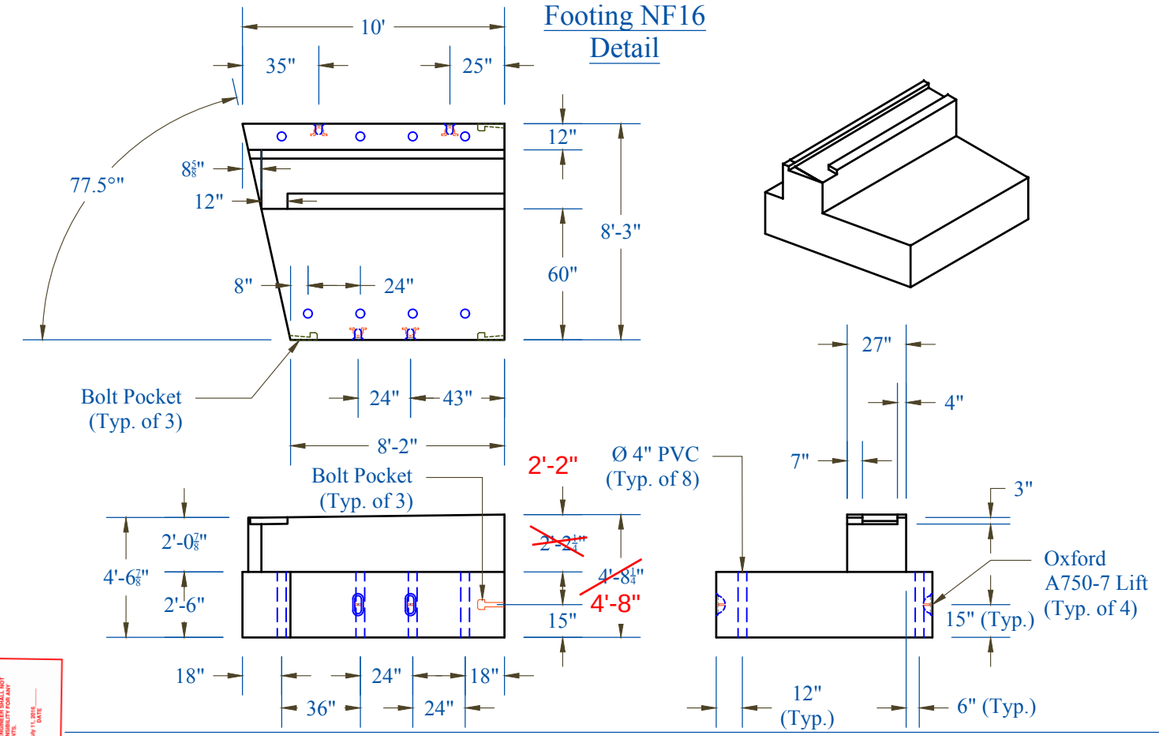

Footing NF2-NF15 Detail

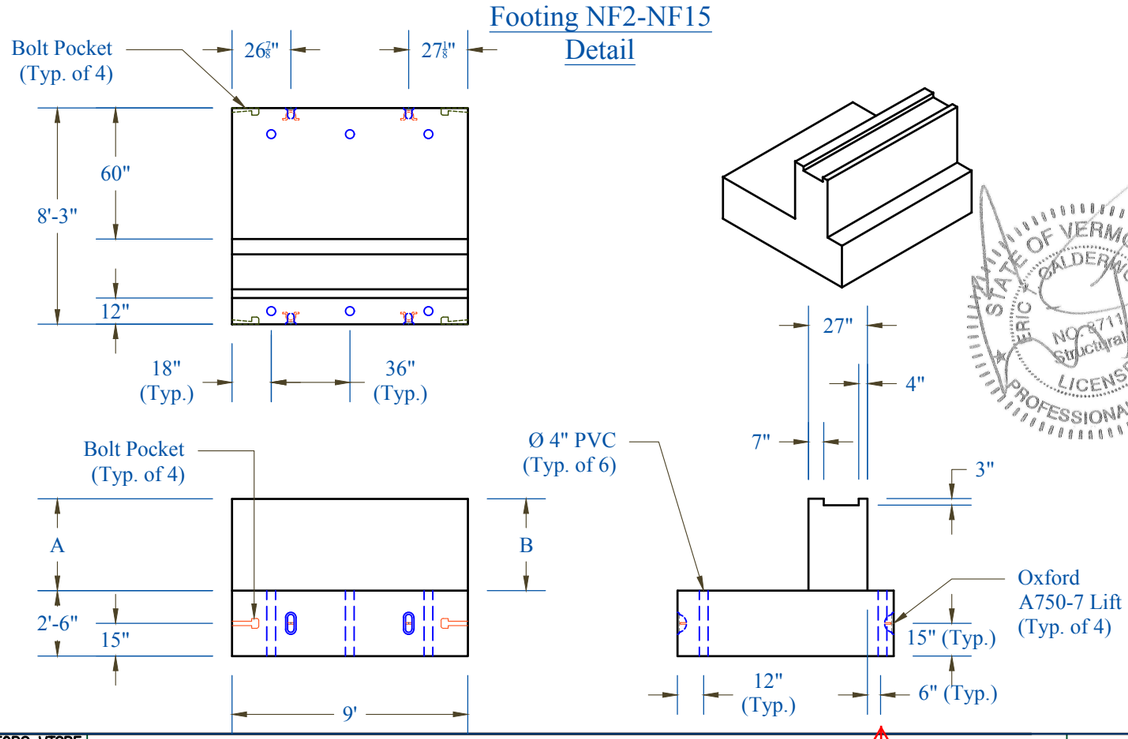

T.Y. LIN INTERNATIONAL

THE STAMPED DOCUMENTS ARE HEREBY:

APPROVED

APPROVED AS NOTED

X REVISE AND RESUBMIT

THIS TRANSMITTAL FOR ADDITIONAL INFORMATION AS APPLICABLE.

THIS REVIEW IS FOR GENERAL CONFORMANCE WITH THE DESIGN CONCEPT AND THE INFORMATION SHOWN ON THE PLANS AND SPECIFICATIONS. ANY DEVIATION FROM THE PLANS OR SPECIFICATIONS NOT CLEARLY NOTED BY THE REVIEWER, WHETHER THE DEVIATION IS INCLUDED OR NOT, SHALL NOT RELIEVE THE CONTRACTOR OF THE CONTRACTUAL RESPONSIBILITY FOR ANY DEVIATION FROM THE REQUIREMENTS OF THE CONTRACT DOCUMENTS.

JAN 11, 2016

REVIEWER

DATE

STATE OF VERMONT
ERIC J. GALDERWOOD
NO. 8711
Structural
LICENSED
PROFESSIONAL ENGINEER

Pedestal Wall ~~Footing~~ Heights

Mark	A	B	Mark	A	B
NF2	3'-5 1/8"	3'-4 1/8"	NF9	2'-9 3/4"	2'-8 5/8"
NF3	3'-4 1/8"	3'-3"	NF10	2'-8 5/8"	2'-7 5/8"
NF4	3'-3"	3'-2"	NF11	2'-7 5/8"	2'-6 1/2"
NF5	3'-2"	3'-0 7/8"	NF12	2'-6 1/2"	2'-5 1/2"
NF6	3'-0 7/8"	2'-11 7/8"	NF13	2'-5 1/2"	2'-4 3/8"
NF7	2'-11 7/8"	2'-10 3/4"	NF14	2'-4 3/8"	2'-3 3/8"
NF8	2'-10 3/4"	2'-9 3/4"	NF15	2'-3 3/8"	~~2'-2 1/4"~~ 2'-2"

adjust dimensions within the table based on the change of the last dimension

Vermont Agency of Transportation
RECEIVED
CK'D BY TYLin/KMH OK'D BY KMH
July 1, 2016
RESUBMIT Yes Rejected
BY kristin M. Higgins DATE 07/11/2016

Identify this view as the "stream Side" or other terminology to better orient th e"A" and "B" dimensions

better to locate center of pvc from edge of form. typ for this page an pg 7

CONTRACTORS VTSPE:

PRECAST CONCRETE BOX CULVERT SHOP DRAWINGS (SDI JOB #17682)

SUPERVISOR: E. Barendse
DETAILER: I. ADAMS
CHECKER: E. Barendse

PROJECT NAME: DUXBURY
PROJECT #: BF 013-4(47)
LOCATION: DUXBURY, VT

INSTALLER:
J.A. MCDONALD
585 Gilman Rd
Lyndon Ctr, VT 05850

FABRICATOR:
193 INDUSTRIAL AVE.
WILLISTON, VT 05495
Ph: (802) 658-0201

SD Ireland PRECAST

06/28/16 NORTH_FOOTINGS 6_OF_8

Footing SF1 Detail

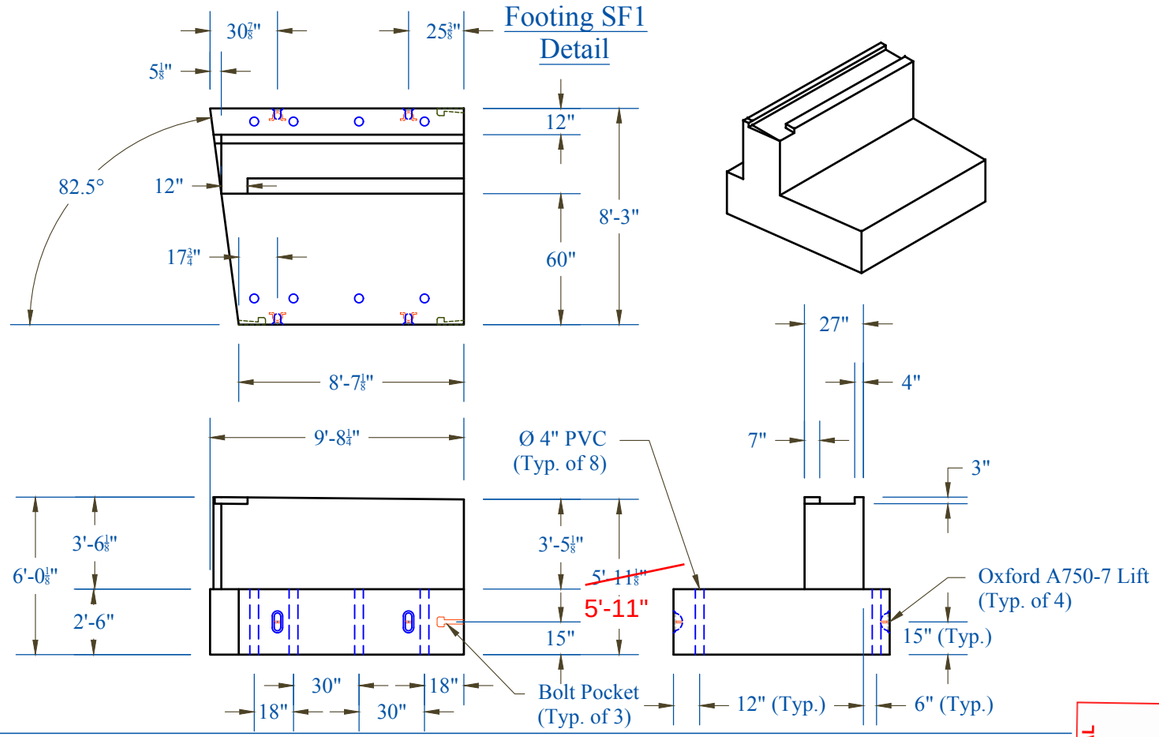

Footing SF16 Detail

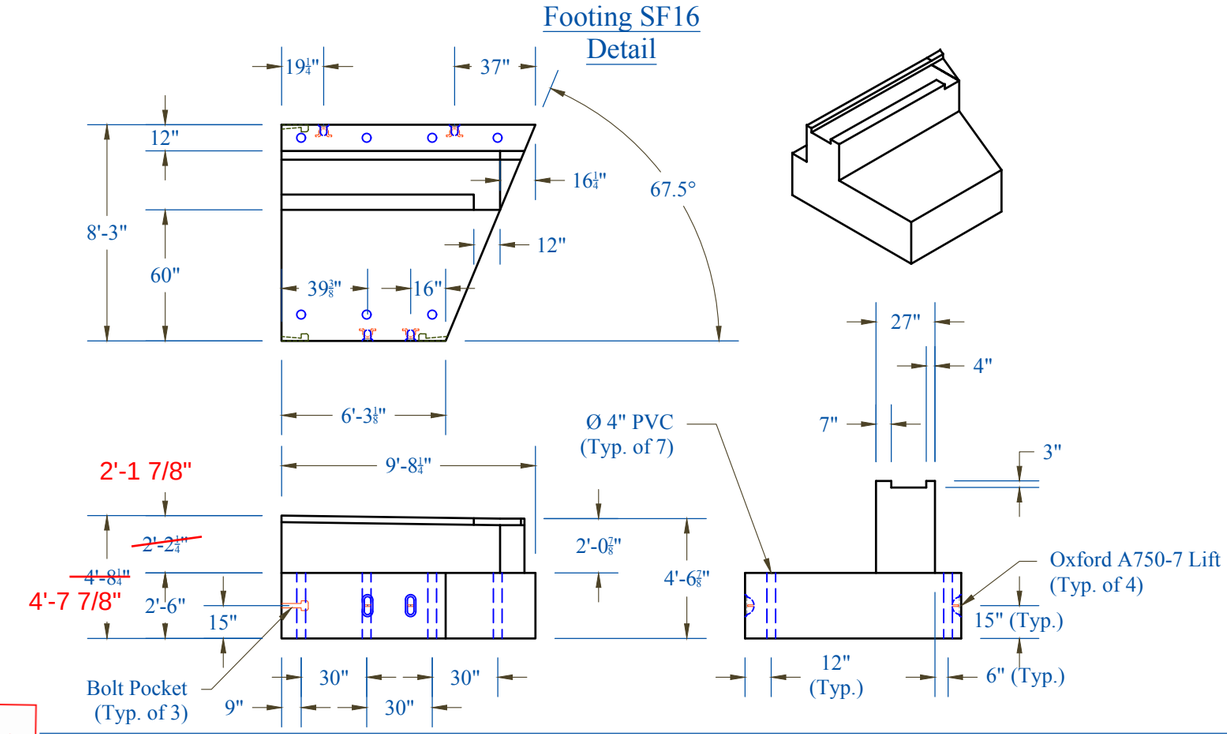

Footing SF2-SF15 Detail

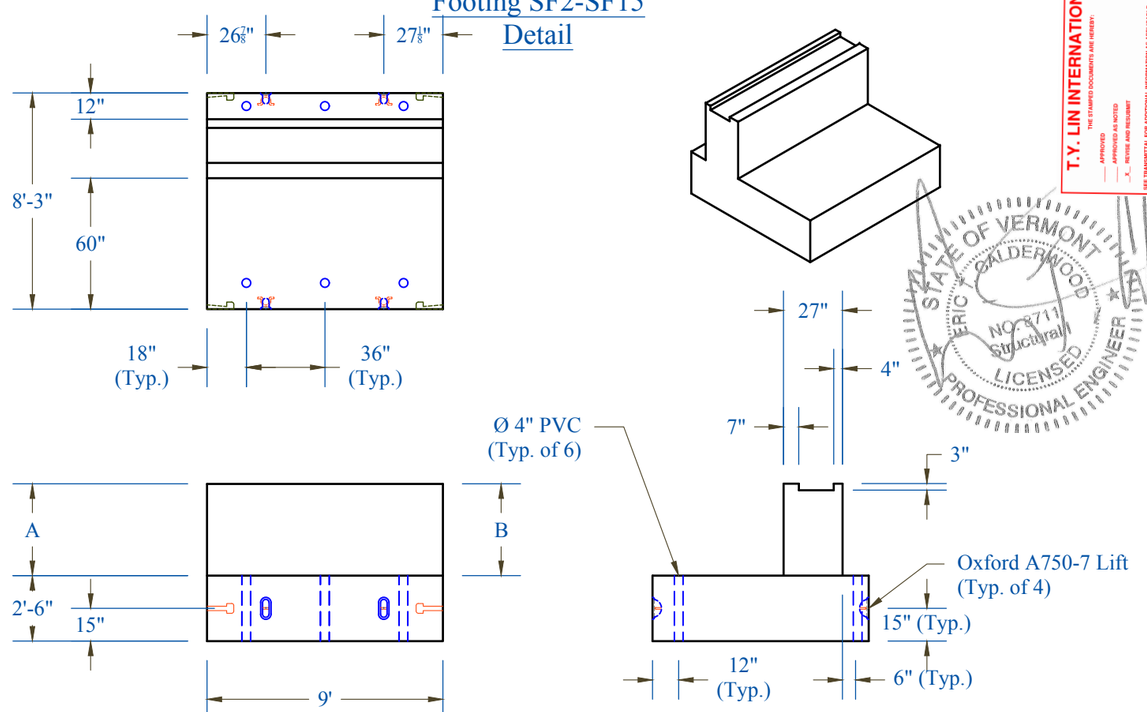

T.Y. LIN INTERNATIONAL

STATE OF VERMONT
ERIC CALDERWOOD
NO. 8711
Structural
LICENSED
PROFESSIONAL ENGINEER

3'-5"

Pedestal Wall ~~Footing~~ Heights

Mark	A	B	Mark	A	B
SF2	~~3'-5 1/8"~~	3'-4 1/8"	SF9	2'-9 3/4"	2'-8 5/8"
SF3	3'-4 1/8"	3'-3"	SF10	2'-8 5/8"	2'-7 5/8"
SF4	3'-3"	3'-2"	SF11	2'-7 5/8"	2'-6 1/2"
SF5	3'-2"	3'-0 7/8"	SF12	2'-6 1/2"	2'-5 1/2"
SF6	3'-0 7/8"	2'-11 7/8"	SF13	2'-5 1/2"	2'-4 3/8"
SF7	2'-11 7/8"	2'-10 3/4"	SF14	2'-4 3/8"	2'-3 3/8"
SF8	2'-10 3/4"	2'-9 3/4"	SF15	2'-3 3/8"	~~2'-2 1/4"~~

adjust table numbers based on first and last dimension change

2'-1.875"

CONTRACTORS VTSPE:

Vermont Agency of Transportation
RECEIVED
CK'D BY TYLin/KMH OK'D BY KMH
July 1, 2016
RESUBMIT Yes Rejected
BY kristin M. Higgins DATE 07/11/2016

PRECAST CONCRETE BOX CULVERT SHOP DRAWINGS (SDI JOB #17682)

SUPERVISOR: E. Barendse
DETAILER: I. ADAMS
CHECKER: E. Barendse

PROJECT NAME: DUXBURY
PROJECT #: BF 013-4(47)
LOCATION: DUXBURY, VT

INSTALLER:
J.A. MCDONALD
585 Gilman Rd
Lyndon Ctr, VT 05850

FABRICATOR:
193 INDUSTRIAL AVE.
WILLISTON, VT 05495
Ph: (802) 658-0201

SD Ireland PRECAST

06/28/16 SOUTH_FOOTINGS 7_OF_8

Footing SF2-15/NF2-NF15 Detail

Heaviest Section: NF-2

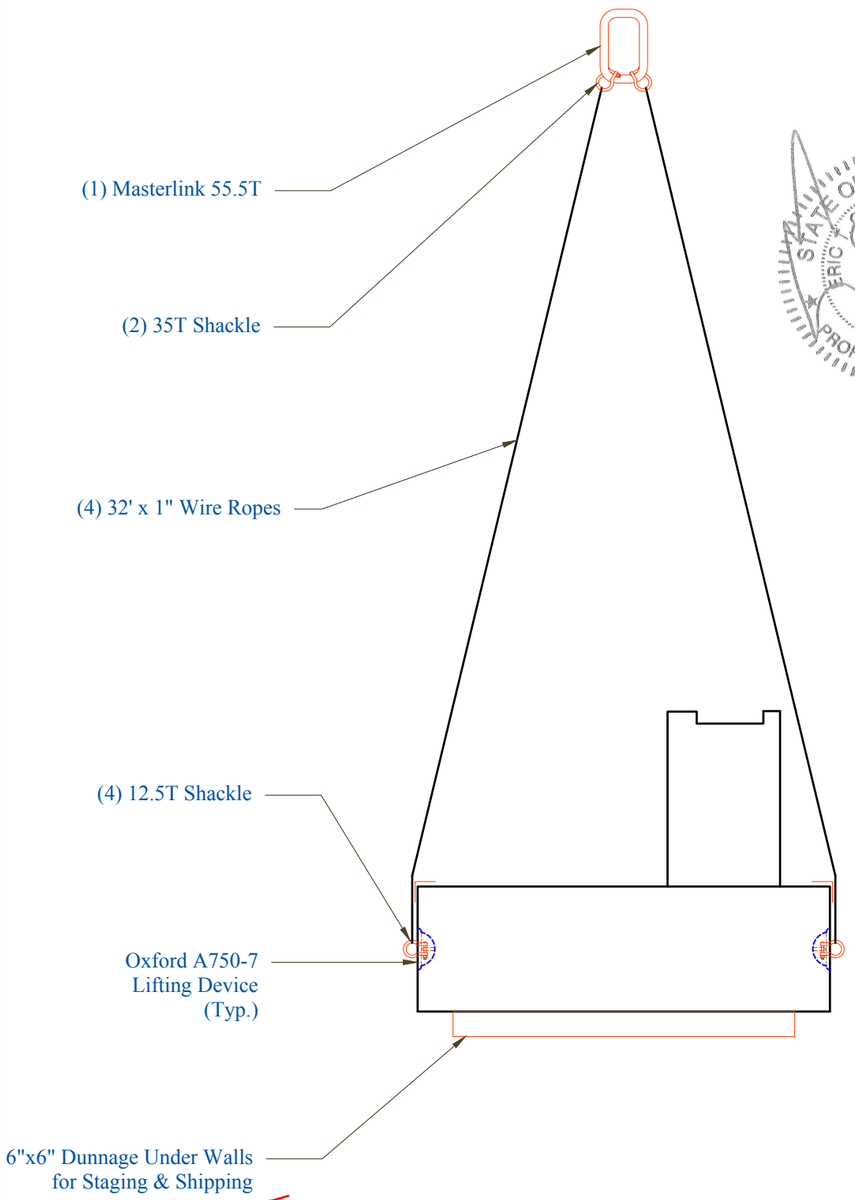

how far in from the ends?

STATE OF VERMONT
ERIC J. CALDERWOOD
NO. 8711
Structural
LICENSED
PROFESSIONAL ENGINEER

Footing SF1,SF16,NF1,NF16,& WF Footings Detail

Heaviest Section: NF-1

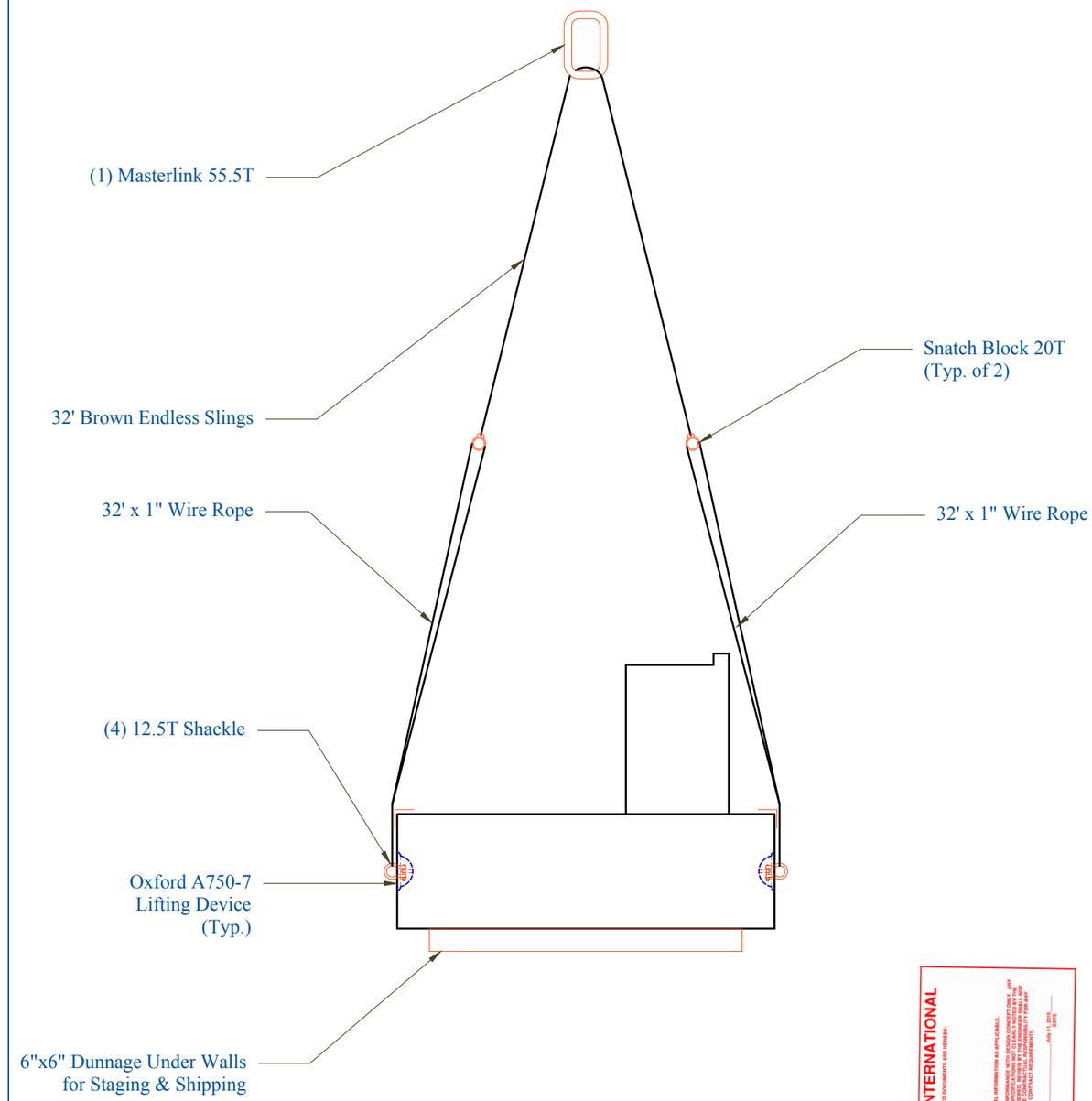

T.Y. LIN INTERNATIONAL

THE STAMPED DOCUMENTS ARE HEREBY:

_____ APPROVED
_____ APPROVED AS NOTED
_X_ REVISE AND RESUBMIT

SEE TRANSMITTAL FOR ADDITIONAL INFORMATION AS APPLICABLE.

THIS REVIEW IS FOR GENERAL CONFORMANCE WITH DESIGN CONCEPT ONLY. ANY DEVIATIONS THAT MAY BE INDICATED ON THE DOCUMENTS SUBMITTED DO NOT RELIEVE THE CONTRACTOR FROM COMPLIANCE WITH THE CONTRACT REQUIREMENTS. UNLESS THE DEVIATION HAS NOT BEEN REVIEWED, REVIEW BY THE ENGINEER SHALL NOT INDICATE ACCEPTANCE OF A DEVIATION THAT MAY BE REQUIRED TO COMPLY FOR SAFETY ERRORS OR DEVIATION FROM THE CONTRACT REQUIREMENTS.

JOSH CLUNG
REVIEWER

July 11, 2016
DATE

CONTRACTORS VTSPE:

Vermont Agency of Transportation
RECEIVED
CK'D BY TYLin/KMH OK'D BY KMH
July 1, 2016
RESUBMIT Yes Rejected
BY kristin M. Higgins DATE 07/11/2016

PRECAST CONCRETE BOX CULVERT SHOP DRAWINGS (SDI JOB #17682)

SUPERVISOR: E. Barendse
DETAILER: I. ADAMS
CHECKER: E. Barendse

PROJECT NAME: DUXBURY
PROJECT #: BF 013-4(47)
LOCATION: DUXBURY, VT

INSTALLER:
J.A. MCDONALD
585 Gilman Rd
Lyndon Ctr, VT 05850

FABRICATOR:
193 INDUSTRIAL AVE.
WILLISTON, VT 05495
Ph: (802) 658-0201

SD Ireland PRECAST

06/28/16 | LIFTING_DETAIL | 8_OF_8