Project Number: 2016.059.009

DESIGN COMPUTATIONS FOR

VAOT bf 013-4(47)
28' x 8' Archcon with Anchor Wingwalls
Duxbury, VT

T.Y. LIN INTERNATIONAL

THE STAMPED DOCUMENTS ARE HEREBY:

____ APPROVED

____ APPROVED AS NOTED

__X__ REVISE AND RESUBMIT

SEE TRANSMITTAL FOR ADDITIONAL INFORMATION AS APPLICABLE.

THIS REVIEW IS FOR GENERAL CONFORMANCE WITH DESIGN CONCEPT ONLY. ANY DEVIATION FROM THE PLANS OR SPECIFICATIONS NOT CLEARLY NOTED BY THE CONTRACTOR HAS NOT BEEN REVIEWED. REVIEW BY THE ENGINEER SHALL NOT RELIEVE THE CONTRACTOR OF THE CONTRACTUAL RESPONSIBILITY FOR ANY ERRORS OR DEVIATION FROM THE CONTRACT REQUIREMENTS.

_____JOSH OLUND_____July 11, 2016_____
REVIEWER DATE

PREPARED FOR:

Michie Corporation
PO Box 870
Henniker, New Hampshire 03242

Vermont Agency of Transportation

RECEIVED

CK'D BY TYLin OK'D BY KMH

July 7, 2016

RESUBMIT Yes **Rejected**

BY Kristin M. Higgins DATE July 11, 2016

PREPARED BY:

DELTA
ENGINEERS, ARCHITECTS, & LAND SURVEYORS

860 Hooper Road, Endwell, New York 13760
TEL: 607-231-6600 FAX: 607-231-6650
EMAIL: precast@delta-eas.com
www.delta-eas.com

7/5/16

2016.059.009
28×8 UNDER 8.6

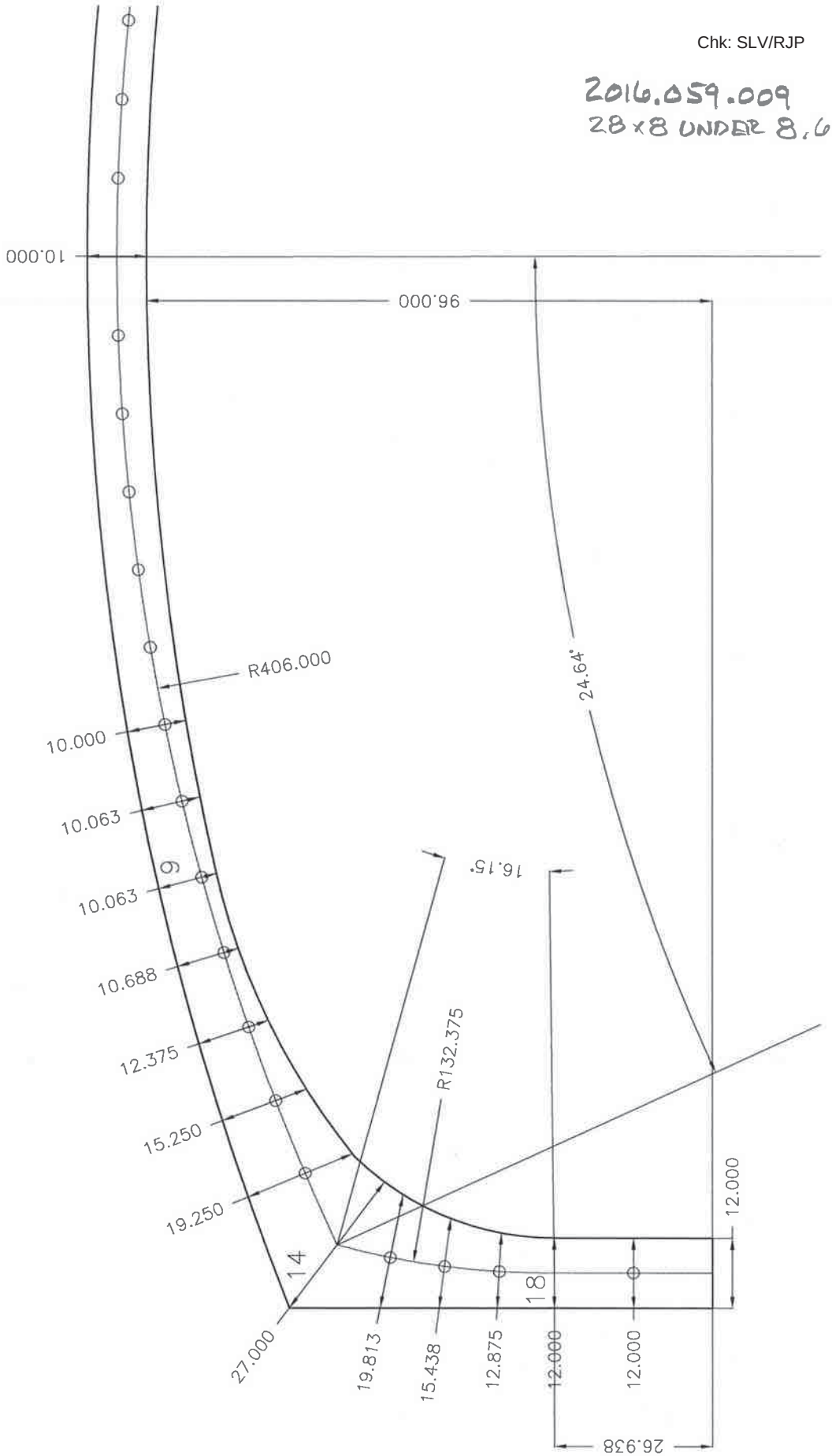

ENGINEERS, ARCHITECTS, & LAND SURVEYORS
860 Hooper Road, Endwell, NY 13760
www.deltaengineers.com
Phone: (607) 231-6600
Fax: (607) 231-6650

JOB 2016.059.009
DESCIPTION 28x8u8.6
SHEET NO ____ OF ____ SCALE ____
CALCULATED BY rja DATE 7/5/2016
CHECKED BY ____ DATE ____

Lane load to input into CANDE

earth cover	8.6	ft.
span	28	ft
rise	8	ft
leg thickness	12	in.
additional dead load	35	psf
lane load	64	psf

deck thickness	10 in
leg thickness	12 in

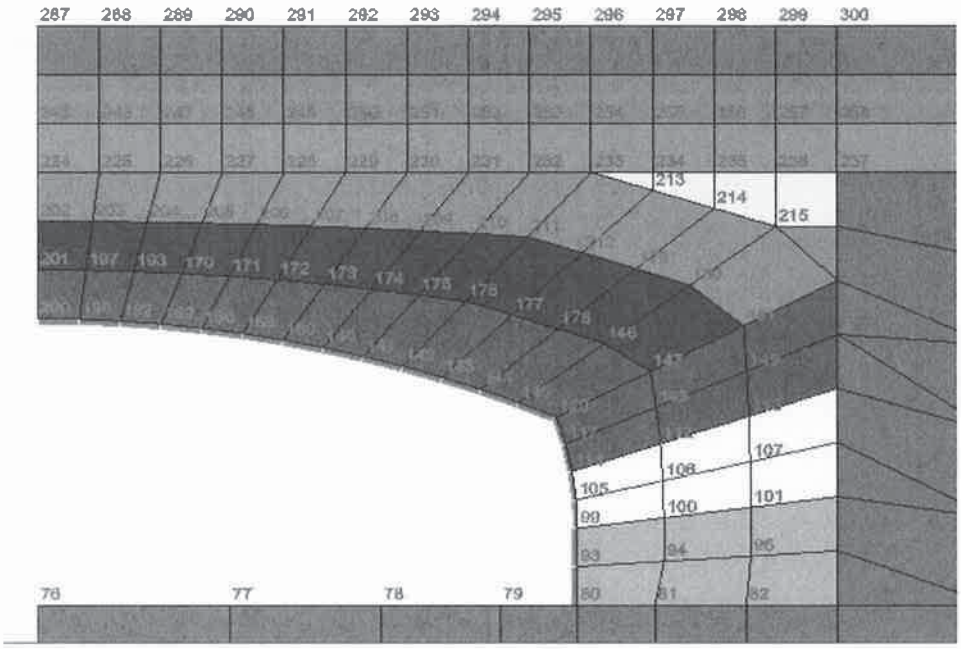

apply lane load as point load at top nodes

Node	coordinate	tributary width	dead load / node	lane load / node	
287	0 in.	1.654 ft.	2.412 lbs / in	4.411 lbs / in	<=== Cande doubles
288	19.85 in.	1.653 ft.	4.822 lbs / in	8.818 lbs / in	center load, so this is
289	39.69 in.	1.654 ft.	4.825 lbs / in	8.822 lbs / in	1/2 regular trib load
290	59.54 in.	1.653 ft.	4.822 lbs / in	8.818 lbs / in	
291	79.38 in.	1.654 ft.	4.825 lbs / in	8.822 lbs / in	
292	99.23 in.	1.654 ft.	4.825 lbs / in	8.822 lbs / in	
293	119.1 in.	1.653 ft.	4.822 lbs / in	8.818 lbs / in	
294	138.9 in.	1.654 ft.	4.825 lbs / in	8.822 lbs / in	
295	158.8 in.	1.654 ft.	4.825 lbs / in	8.822 lbs / in	
296	178.6 in.	1.653 ft.	4.822 lbs / in	8.818 lbs / in	
297	198.5 in.	1.654 ft.	4.825 lbs / in	8.822 lbs / in	live load from here out becomes
298	218.3 in.	1.653 ft.	4.822 lbs / in	8.818 lbs / in	beneficial and is neglected
299	238.2 in.	1.654 ft.	4.825 lbs / in	8.822 lbs / in	dead load is applied because
300	258 in.				it is a perminant load

DELTA
ENGINEERS, ARCHITECTS, & LAND SURVEYORS
860 Hooper Road, Endwell, NY 13760
www.deltaengineers.com
Phone: (607) 231-6600
Fax: (607) 231-6650

JOB 2016.059.009
DESCIPTION 28x8u8.6
SHEET NO. ____ OF ____ SCALE ____
CALCULATED BY rja DATE 7/5/2016
CHECKED BY ____ DATE ____

span	28 ft.	MPF	1.2
earth cover over structure	8.6 ft.	impact = 33*(1-0.125*earth cover) =	0 %
axle width	6 ft	# of steps to divide load over in Cande =	4
wheel width	20 in.	live load distribution factor thru fill =	1.15

axle distribution width = axle width + wheel width + earth cover * dist factor thru fill = 17.56 feet

axle load to input into Cande = axle weight*impact*MPF/distribution width/12" per ft/# of load steps

LOAD RATING VEHICLES

HL-93 TRUCK
72 KIPS (36 TONS)
0.64 K/L.F. LANE LOAD

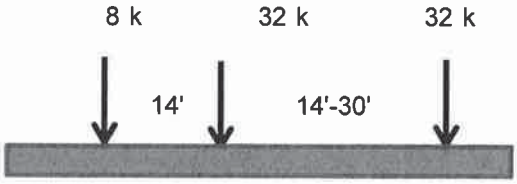

axle load to put into Cande
8 k = 11.39 lb/inch/step
32 k = 45.57 lb/inch/step

HL-93 TANDEM
50 KIPS (25 TONS)
0.64 K/L.F. LANE LOAD

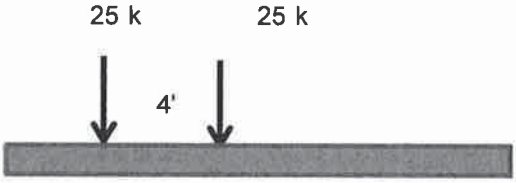

axle load to put into Cande
25 k = 35.6 lb/inch/step
25 k = 35.6 lb/inch/step

ENGINEERS, ARCHITECTS, & LAND SURVEYORS
860 Hooper Road, Endwell, NY 13760
www.deltaengineers.com
Phone: (607) 231-6600
Fax: (607) 231-6650

JOB 2016.059.009
DESCIPTION 28x8u8.6
SHEET NO. ____ OF ____ SCALE ____
CALCULATED BY rja DATE 7/5/2016
CHECKED BY ____ DATE ____

span 28 ft
leg thickness 12 inches

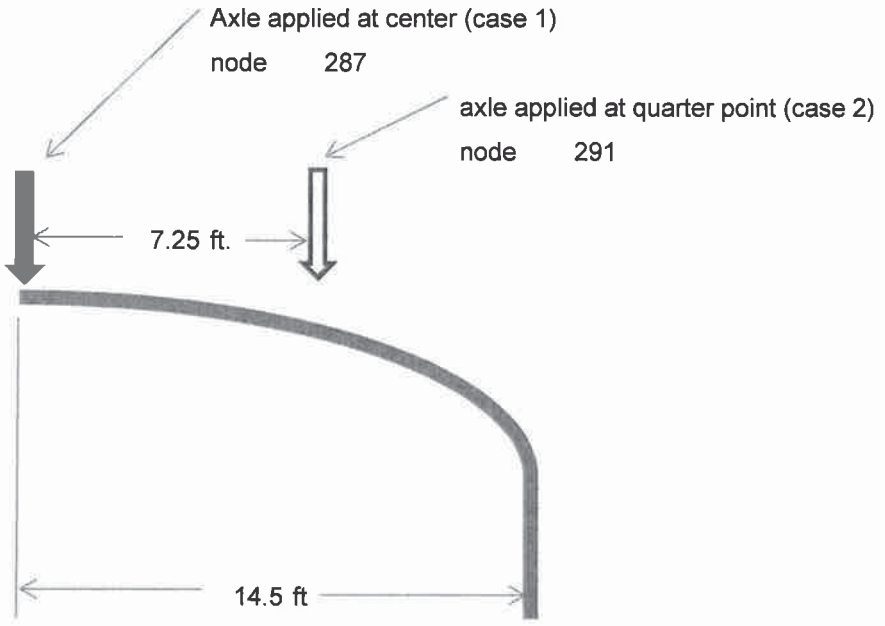

case 1
axle applied to centerline

case 2
axle applied to quarter point only

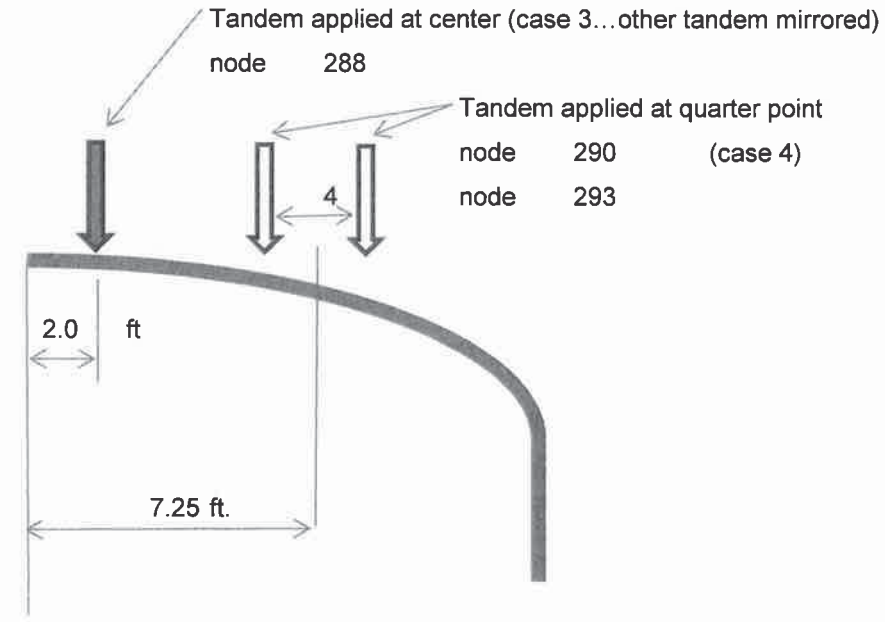

case 3
tandem applied at centerline

case 4
tandem applied at quarter point

DELTA
ENGINEERS, ARCHITECTS, & LAND SURVEYORS
860 Hooper Road, Endwell, NY 13760
www.deltaengineers.com
Phone: (607) 231-6600
Fax: (607) 231-6650

JOB 2016.059.009
DESCIPTION 28x8u8.6
SHEET NO. ____ OF ____ SCALE ____
CALCULATED BY rja DATE 7/5/2016
CHECKED BY ____ DATE ____

Load case summary

Load Case	Description
1	HL-93 Truck at center
2	HL-93 Truck at 1/4 Point
3	HL-93 Tandem Mod at center
4	HL-93 Tandem Mod at 1/4 Point

	case 1		case 2		case 3		case 4		
failure mode	node	ratio	node	ratio	node	ratio	node	ratio	
steel yeilding	1	0.766	17	0.805	1	0.869	17	0.896	
concrete crushing	17	0.774	17	0.797	17	0.822	17	0.857	
shear failure	17	1.025	17	1.069	17	1.118	17	1.168	*
radial tension failure	1	0.119	1	0.119	1	0.135	1	0.132	
max crack width/allowable		0.8		0.87		0.87		0.96	

* SEE HL-93 LOAD RATING FOR SHEAR CALC WITH STIRRUPS.

DELTA
ENGINEERS, ARCHITECTS, & LAND SURVEYORS
860 Hooper Road, Endwell, NY 13760
www.deltaengineers.com
Phone: (607) 231-6600
Fax: (607) 231-6650

JOB	2016.059.009	Chk: SLV/RJP	7	
DESCIPTION	28x8 under 8			
SHEET NO.		OF	SCALE	
CALCULATED BY	rja	DATE	7/5/2016	
CHECKED BY		DATE		

STRENGTH 1 CANDE RESULTS

28x8under8c4MOD.out

*** WELCOME TO CANDE-2013(version 3/1/2013) ***

MASTER CONTROL AND PIPE-TYPE DATA FOR PROBLEM # 1

LOAD CASE 4 CONTROLS.

LOAD CASE 4 INPUT PRESENTED.

ONLY BOUNDARY CONDITIONS + RESULTS ARE PRESENTED FOR LOAD CASE 1, 2, 3.

USER TITLE: 28x8_u8.6_c4

EXECUTION MODE	ANALYS
SOLUTION LEVEL	#2 AUTO
METHODOLOGY (LRFD OR SERVICE) ...	LRFD
NUMBER OF PIPE-ELEMENT GROUPS	1
MAXIMUM ITERATIONS PER STEP	50

CULVERT PIPE-TYPE	CONCRETE
CANNED MESH CODE #	3
NUMBER OF BEAM ELEMENTS	19

6,000 psi

CONCRETE MATERIAL PROPERTIES ARE AS FOLLOWS

COMPRESSION STRENGTH (psi).....	6500.000
ELASTIC YOUNGS MODULUS (psi).....	4595487.000
POISSON RATIO	0.170
CONCRETE DENSITY (pcf)	150.000
INITIAL TENSILE CRACKING STRAIN.....	0.000010
INITIAL COMPRESSION YIELD STRAIN....	0.000687
INITIAL COMPRESSION CRUSH STRAIN ...	0.002000
SHEAR STRENGTH MODEL (NSHEAR) # ... (VARIABLE STRENGTH MODEL PRINTED IN OUTPUT)	1
CONCRETE CRACK-WIDTH MODEL NAME..... (DRIVEN BY TENSILE STRAIN IN STEEL)	HEGER-MCGRATH

STEEL REINFORCEMENT MATERIAL PROPERTIES

TYPE OF STEEL CAGES (RSHAPE)	ARBIT
STEEL YIELD STRENGTH (psi).....	60000.000
STEEL ELASTIC MODULUS (psi).....	29000000.000

28x8under8c4MOD.out

STEEL POISSON RATIO 0.300000

STEEL YIELDING STRAIN 0.001882

NONLINEAR MODELING CODE (1,2,3) 3

STEEL-BASED CRACKWIDTH PREDICTION PARAMETERS

REBAR SPACING INNER ROW (SLI), (in)	5.00
REBAR SPACING OUTER ROW (SLO), (in)	4.00
NUMBER OF STEEL LAYERS FOR INNER CAGE	1
NUMBER OF STEEL LAYERS FOR OUTER CAGE	1
HEGER-MCGRATH CODE NUMBER FOR STEEL TYPE..	3

WALL THICKNESS, REBAR AREAS AND COVER DEPTHS

WALL-THICK	INNER-REBAR	OUTER-REBAR	INNER-COVER	OUTER COVER
10.0000	0.0770	0.0200	2.0000	2.5000
10.0000	0.0770	0.0200	2.0000	2.5000
10.0000	0.0770	0.0200	2.0000	2.5000
10.0000	0.0770	0.0200	2.0000	2.5000
10.0000	0.0770	0.0200	2.0000	2.5000
10.0000	0.0770	0.0200	2.0000	2.5000
7 10.0000	0.0770	0.0200	2.0000	2.5000
10.0630	0.0770	0.0200	2.0000	2.5000
10.0630	0.0770	0.0880	2.0000	2.5000
10.6880	0.0200	0.0880	2.0000	2.5000
12.3750	0.0400	0.1300	2.0000	2.5000
15.2500	0.0400	0.1300	2.0000	2.5000
19.2500	0.0400	0.1300	2.0000	2.5000
27.0000	0.0400	0.1300	2.0000	2.5000
19.8130	0.0400	0.1300	2.0000	2.5000
15.4380	0.0400	0.1300	2.0000	2.5000
12.8750	0.0400	0.1300	2.0000	2.5000
12.0000	0.0400	0.1300	2.0000	2.5000
12.0000	0.0400	0.0880	2.0000	2.5000
12.0000	0.0400	0.0880	2.0000	2.5000

LRFD RESISTANCE FACTORS FOR STRENGTH-LIMIT STATES
AND CRACK-WIDTH LIMIT AT SERVICE LOAD

YIELDING OF REINFORCEMENT STEEL	0.950
CRUSHING OF CONCRETE OUTER FIBER.....	0.750
SHEARING FAILURE OF CONCRETE	0.900
SPLITTING OF CONCRETE IN RADIAL TENSION	0.900
ALLOWABLE CRACKWIDTH SERVICE LOAD (inch)....	0.010

LARGE DEFORMATION/BUCKLING CODE, IBUCK = 0
IBUCK=0, MEANS SMALL DEFORMATION THEORY FOR GROUP
AND NO BUCKLING PREDICTION.

0.0021

5" and 10" spacings used in plans

it appears there are two layers used in the plans (A2 and A3 bars)

0.088 in plans - ok

1.5"

2"

0.031 in plans

0.15 in plans - ok

28x8under8c4MOD.out

```
REVIEW SYSTEM INPUT DATA


LEVEL-2 DATA FOR ARCH-TYPE CANNED MESH

    *** MESH PARAMETERS ***
     TYPE OF MESH -------------------------------------- TREN
     DEPTH OF TRENCH ABOVE FOOTING LEVEL (FT) ---------   12.72
     WIDTH OF TRENCH AT FOOTING LEVEL (FT) ------------    7.00
     SLOPE OF TRENCH WALL (H/V) -----------------------    0.00
     MESH SPACING PARAMETER ---------------------------    1.00
     TOTAL SOIL HEIGHT ABOVE CROWN (FT) ---------------    8.61
     MESH HEIGHT ABOVE CROWN (FT) ---------------------    8.61
     SOIL DENSITY ABOVE MESH (PCF) --------------------  140.00
     NUMBER OF ELEMENT LAYERS ABOVE CROWN -------------    6


*** ARCH PARAMETERS ***
     CENTERLINE RISE OF ARCH (IN) ---------------------  101.00
     BOTTOM HALF SPAN OF ARCH (IN) --------------------  174.00
     SIDE RISE OF ARCH ABOVE FOOTING (IN) -------------   26.94
     FOOTING DEPTH (IN) -------------------------------   30.00
     OUTSIDE FOOTING WIDTH (IN) -----------------------   25.00
     INSIDE FOOTING WIDTH (IN) ------------------------   25.00
     NUMBER OF ARCH SEGMENTS DEFINED ------------------    3

*** CURVED TOP SEGMENT ***
     RADIUS (IN) --------------------------------------  406.00
     CENTRAL ANGLE (DEG) ------------------------------   24.64
     SEGMENT ARC LENGTH (IN) --------------------------  174.60
     NUMBER OF BEAM ELEMENTS IN SEGMENT ---------------   13

*** CURVED CORNER SEGMENT ***
     RADIUS (IN) --------------------------------------  132.38
     CENTRAL ANGLE (DEG) ------------------------------   16.15
     SEGMENT ARC LENGTH (IN) --------------------------   37.31
     NUMBER OF BEAM ELEMENTS IN SEGMENT ---------------    4

*** STRAIGHT SIDE SEGMENT ***
     DEFLECTION ANGLE (DEG) ---------------------------   90.00
     SEGMENT LENGTH (IN) ------------------------------   26.94
     NUMBER OF BEAM ELEMENTS IN SEGMENT ---------------    2

 FINITE ELEMENT INPUT CONTROLS (PREP)


THE DATA TO BE RUN IS ENTITLED ...

New Level 2 arch mesh

PRINT AND PLOT CONTROL CODES ...
  PRINT CONTROL FOR MESH DATA------------    3
  PLOT FILE CONTROL MESH & RESULS--------    3
  PRINT FINITE ELEMENT RESULTS ----------    1
  INPUT DATA CHECK CODE------------------    0
```

28x8under8c4MOD.out

KEY NUMBERS DESCRIBING MESH ...
THE NUMBER OF LOAD STEPS IS---------- 15
TOTAL NUMBER OF NODES IS---------- 307
TOTAL NUMBER OF ELEMENTS IS---------- 269
TOTAL NUMBER OF BEAM ELEMENTS IS------- 19
MAX NUMBER OF BOUNDARY CONDITIONS IS--- 42

* * * BOUNDARY CONDITIONS * * *
(FORCES = LBS; DISPLACEMENTS = INCHES; ROTATIONS = DEGREES)

BOUNDARY NODE	LOAD STEP	X-FORCE OR X-DISPLACEMENT	Y-FORCE OR Y-DISPLACEMENT	X-Y ROTATION BEAM ROTATIONAL BOUNDARY CONDITIONS
290 F	12	F = 0.0000E+00	F = -0.3560E+02	0.0000E+00
290 F	13	F = 0.0000E+00	F = -0.3560E+02	0.0000E+00
290 F	14	F = 0.0000E+00	F = -0.3560E+02	0.0000E+00
290 F	15	F = 0.0000E+00	F = -0.3560E+02	0.0000E+00
293 F	12	F = 0.0000E+00	F = -0.3560E+02	0.0000E+00
293 F	13	F = 0.0000E+00	F = -0.3560E+02	0.0000E+00
293 F	14	F = 0.0000E+00	F = -0.3560E+02	0.0000E+00
293 F	15	F = 0.0000E+00	F = -0.3560E+02	0.0000E+00
287 F	15	F = 0.0000E+00	F = -0.7000E+01	0.0000E+00
288 F	15	F = 0.0000E+00	F = -0.1400E+02	0.0000E+00
289 F	15	F = 0.0000E+00	F = -0.1400E+02	0.0000E+00
290 F	15	F = 0.0000E+00	F = -0.1400E+02	0.0000E+00
291 F	15	F = 0.0000E+00	F = -0.1400E+02	0.0000E+00
292 F	15	F = 0.0000E+00	F = -0.1400E+02	0.0000E+00
293 F	15	F = 0.0000E+00	F = -0.1400E+02	0.0000E+00
294 F	15	F = 0.0000E+00	F = -0.1400E+02	0.0000E+00
295 F	15	F = 0.0000E+00	F = -0.1400E+02	0.0000E+00
296 F	15	F = 0.0000E+00	F = -0.1400E+02	0.0000E+00

* * * * * COMPLETED MESH GENERATION * * * * *

New Level 2 arch mesh

28x8under8c4MOD.out

```
CALCULATED KEY NUMBERS ...
  THE NUMBER OF DATA ERRORS IS-----------    0
  THE NUMBER OF SOIL MATERIALS IS--------    3
  THE NUMBER OF PIPE-TYPE GROUPS IS------    1
  THE NUMBER OF INTERFACE MATERIALS IS---   19
  BAND WIDTH ESTIMATE (MAX)--------------   88


* * * * MESH DATA HAS BEEN SAVED ON UNIT 14 * * * *


 BEAM-NODE SEQUENCE NUMBERS FOR EACH GROUP

    BEAM-ELEMENT GROUP NUMBER =    1

     BEAM-NODE       MESH-NODE      CONNECTED-GROUP-ELEMENTS
     SEQUENCE        NUMBER         FOREWARD-#     BACKWARD-#
         1             198              1              0
         2             194              2              1
         3             190              3              2
         4             167              4              3
         5             164              5              4
         6             161              6              5
         7             158              7              6
         8             138              8              7
         9             136              9              8
        10             134             10              9
        11             132             11             10
        12             130             12             11
        13             128             13             12
        14             118             14             13
        15             115             15             14
        16             109             16             15
        17             103             17             16
        18              97             18             17
        19              91             19             18
        20              80              0             19


 MATERIAL DESCRIPTION FOR SOILS AND INTERFACE
 (ALL DENSITY UNITS ARE pcf, ALL MODULUS UNITS ARE psi)

    PROPERTIES FOR MATERIAL  1   ********in site

         DENSITY =    0.14000E+03

         YOUNGS MODULUS= 0.5000E+04
         POISSONS RATIO= 0.3500E+00
         CONFINED MOD.= 0.8025E+04
         LATERAL COEFF.= 0.5385E+00


    PROPERTIES FOR MATERIAL  2   ********Footing

         DENSITY =    0.15000E+03

         YOUNGS MODULUS= 0.3122E+07
         POISSONS RATIO= 0.1700E+00
```

CONFINED MOD.= 0.3356E+07
LATERAL COEFF.= 0.2048E+00

PROPERTIES FOR MATERIAL 3 ********ML95

DENSITY = 0.14000E+03

CONTROLS FOR DUNCAN SOIL MODEL
WITH SELIG HYPERBOLIC BULK MODULUS FORMULATION

LRFD STRESS CONTROL..... 0

ENTERING ELEMENT RATIO..... 0.5000

Is AASHTO 3.11.7 considered by the software?

HYPERBOLIC STRESS-STRAIN PARAMETERS

SOIL CLASSIFICATION ML95

COHESION INTERCEPT C 4.0000

FRICTION ANGLE PHIO (DEG)..... 34.0000

10-FOLD REDUCTION IN PHIO(DEG).. 0.0000

SCALED MODULUS NUMBER ZK 440.0000

MODULUS EXPONENT ZN 0.4000

FAILURE RATIO RF 0.9500

INIT. BULK MODULUS NUMBER BI.... 48.3000

ULT. VOLUMETRIC STRAIN EU 0.0600

INTERFACE ELEMENT MATERIAL-GROUP PROPERTIES

MAT. NO.	NORMAL-ANGLE	COEF-FRICTION	TENSILE-RUPTURE	INITIAL-GAP
1	90.00	0.40000	50.00000	0.00000
2	88.03	0.40000	50.00000	0.00000
3	86.14	0.40000	50.00000	0.00000
4	84.24	0.40000	50.00000	0.00000
5	82.35	0.40000	50.00000	0.00000
6	80.45	0.40000	50.00000	0.00000
7	78.56	0.40000	50.00000	0.00000
8	76.66	0.40000	50.00000	0.00000
9	74.77	0.40000	50.00000	0.00000
10	72.87	0.40000	50.00000	0.00000
11	70.97	0.40000	50.00000	0.00000
12	69.08	0.40000	50.00000	0.00000
13	67.18	0.40000	50.00000	0.00000
14	66.55	0.40000	50.00000	0.00000
15	11.42	0.40000	50.00000	0.00000
16	7.38	0.40000	50.00000	0.00000

17	3.35	0.40000	50.00000	0.00000
18	0.00	0.40000	50.00000	0.00000
19	0.00	0.40000	50.00000	0.00000

LRFD TOTAL LOAD FACTORS PER LOAD STEP

LOAD STEP	LOAD FACTOR	USER COMMENT
1	1.313	Factor for load step #1
2	0.857	Factor for load step #2
3	0.857	Factor for load step #3
4	0.857	Factor for load step #4
5	1.365	Factor for load step #5
6	1.365	Factor for load step #6
7	1.365	Factor for load step #7
8	1.365	Factor for load step #8
9	1.365	Factor for load step #9
10	1.365	Factor for load step #10
11	1.365	Factor for load step #11
12	1.750	Factor for load step #12
13	1.750	Factor for load step #13
14	1.750	Factor for load step #14
15	1.750	Factor for load step #15

+ +

SOLUTION OUTPUT RESULTS

+ +

FINITE ELEMENT OUTPUT FOR LOAD STEP 1

+ +

\- -

CONCRETE, FACTORED-EVALUATION FOR GROUP 1, LOAD-STEP 1

28x8under8c4MOD.out

STRUCTURAL RESPONSES OF CONCRETE-GROUP 1, LOAD-STEP 1
COORDINATES, DISPLACEMENTS AND CRACK DEPTHS ARE INCHES
Y-BAR IS "NEUTRAL AXIS" LOCATION FROM INTERIOR, INCHES
PRESSURES ARE LB/IN**2
MOMENTS ARE IN-LB/IN
THRUST AND SHEAR ARE LB/IN

LOCAL NODE	X-COORD. Y-COORD.	X-DISP. Y-DISP.	N-PRES. S-PRES.	MOMENT THRUST	Y-BAR CRACK DEPTH
1	0.00	0.00000E+00	-0.27200E+00	0.21850E+04	0.74181E+01
	101.00	-0.28017E+00	-0.35419E-03	-0.16131E+03	0.65934E+01
2	13.43	-0.72184E-04	-0.27154E+00	0.21208E+04	0.74181E+01
	100.76	-0.27822E+00	-0.93276E-02	-0.16216E+03	0.65665E+01
3	26.84	0.11089E-03	-0.27108E+00	0.19233E+04	0.74181E+01
	100.08	-0.27252E+00	-0.18301E-01	-0.16342E+03	0.64758E+01
4	40.22	0.76738E-03	-0.27033E+00	0.15931E+04	0.74181E+01
	98.95	-0.26342E+00	-0.27255E-01	-0.16552E+03	0.62740E+01
5	53.56	0.20557E-02	-0.26928E+00	0.11319E+04	0.72278E+01
	97.38	-0.25159E+00	-0.36178E-01	-0.16844E+03	0.56201E+01
6	66.84	0.39903E-02	-0.26794E+00	0.54181E+03	0.48856E+01
	95.38	-0.23838E+00	-0.45069E-01	-0.17218E+03	0.00000E+00
7	80.05	0.64346E-02	-0.26672E+00	-0.17451E+03	0.48856E+01
	92.93	-0.22494E+00	-0.53996E-01	-0.17674E+03	0.00000E+00
8	93.16	0.92580E-02	-0.26562E+00	-0.10141E+04	0.15738E+01
	90.05	-0.21174E+00	-0.62980E-01	-0.18210E+03	0.78080E+01
9	106.18	0.11922E-01	-0.26790E+00	-0.19739E+04	0.25648E+01
	86.73	-0.20072E+00	-0.72959E-01	-0.18829E+03	0.65755E+01
10	119.08	0.13781E-01	-0.28441E+00	-0.30527E+04	0.27446E+01
	82.99	-0.19390E+00	-0.87655E-01	-0.19548E+03	0.72135E+01
11	131.84	0.14632E-01	-0.32549E+00	-0.42599E+04	0.34229E+01
	78.82	-0.19093E+00	-0.11224E+00	-0.20410E+03	0.79622E+01
12	144.47	0.14492E-01	-0.39417E+00	-0.56226E+04	0.40506E+01
	74.23	-0.19104E+00	-0.15068E+00	-0.21489E+03	0.99267E+01
13	156.93	0.13497E-01	-0.50558E+00	-0.71883E+04	0.48788E+01
	69.23	-0.19329E+00	-0.21269E+00	-0.22903E+03	0.12627E+02
14	169.22	0.11827E-01	-0.44613E+00	-0.90346E+04	0.64069E+01
	63.82	-0.19691E+00	-0.44687E+00	-0.25967E+03	0.17535E+02
15	171.39	0.84570E-02	-0.11037E+00	-0.81138E+04	0.49926E+01
	54.75	-0.19765E+00	-0.54639E+00	-0.28913E+03	0.13013E+02
16	172.91	0.42547E-02	-0.55474E-01	-0.70430E+04	0.40905E+01
	45.55	-0.19827E+00	-0.42818E+00	-0.30006E+03	0.10135E+02
17	173.78	-0.12898E-02	-0.21087E-01	-0.57954E+04	0.35348E+01

	36.26	-0.19870E+00	-0.36066E+00	-0.30604E+03	0.83665E+01
18	174.00	-0.85644E-02	-0.31356E-02	-0.43541E+04	0.33381E+01
	26.94	-0.19876E+00	-0.33089E+00	-0.31409E+03	0.75535E+01
19	174.00	-0.21988E-01	0.13504E-11	-0.21771E+04	0.32429E+01
	13.47	-0.19860E+00	-0.32604E+00	-0.32939E+03	0.70161E+01
20	174.00	-0.37034E-01	0.31356E-02	0.13097E-09	0.60775E+01
	0.00	-0.19850E+00	-0.32119E+00	-0.34781E+03	0.00000E+00

SHEAR FORCE DIAGNOSTCS FOR CONCRETE-GROUP 1, LOAD STEP 1
-- V-factor is coefficient of sqrt(PFPC) equal to capacity.
-- Shear depth "d" is negative if measured from outer wall.
-- Stirrup load is excess shear force above capacity.

NODE	EQUIVALENT V-factor	SHEAR CAPACITY lbs/inch	APPLIED SHEAR lbs/inch	APPLIED/ CAPACITY ratio	SHEAR DEPTH-d inches	STIRRUP LOAD lbs/inch
1	1.68	1083.74	-0.19	0.000	8.00	0.00
2	1.68	1083.79	9.74	0.009	8.00	0.00
3	1.68	1083.86	19.65	0.018	8.00	0.00
4	1.68	1083.97	29.46	0.027	8.00	0.00
5	1.68	1084.13	39.14	0.036	8.00	0.00
6	3.45	2224.33	48.64	0.022	8.00	0.00
7	4.50	2719.05	57.93	0.021	-7.50	0.00
8	2.07	1261.96	66.99	0.053	-7.56	0.00
9	1.91	1165.70	75.90	0.065	-7.56	0.00
10	1.83	1205.94	85.11	0.071	-8.19	0.00
11	1.92	1532.33	95.68	0.062	-9.88	0.00
12	1.68	1731.50	109.02	0.063	-12.75	0.00
13	1.50	2029.30	127.03	0.063	-16.75	0.00
14	1.34	2647.91	19.37	0.007	-24.50	0.00
15	1.49	2075.61	-106.77	0.051	-17.31	0.00
16	1.68	1749.78	-124.30	0.071	-12.94	0.00
17	1.88	1571.73	-144.15	0.092	-10.38	0.00
18	2.17	1665.42	-158.08	0.095	-9.50	0.00
19	3.16	2419.80	-161.62	0.067	-9.50	0.00
20	4.50	3625.40	-161.62	0.045	10.00	0.00

STRESS AND STRAIN MEASURES FOR CONCRETE-GROUP 1, LOAD STEP 1

NODE	MAXIMUM COMPRESSION psi	AVERAGE SHEAR psi	RADIAL TENSION psi	INNER-WALL STRAIN in/in	OUTER-WALL STRAIN in/in
1	-303.11	-0.02	0.66	0.1533E-03	-0.6405E-04
2	-295.51	1.26	0.64	0.1486E-03	-0.6245E-04
3	-271.79	2.54	0.58	0.1339E-03	-0.5743E-04
4	-232.14	3.80	0.47	0.1094E-03	-0.4906E-04
5	-174.00	5.05	0.29	0.7001E-04	-0.3677E-04
6	-47.40	6.28	0.00	0.2891E-05	-0.1002E-04
7	-26.20	7.47	0.00	-0.5537E-05	-0.1380E-05
8	-315.46	8.57	0.01	-0.6666E-04	0.2754E-03
9	-282.19	9.71	0.00	-0.5963E-04	0.1413E-03
10	-379.08	10.09	0.00	-0.8010E-04	0.1971E-03

11	-324.90	9.45	0.00	-0.6866E-04	0.1519E-03
12	-284.85	8.39	0.00	-0.6019E-04	0.1409E-03
13	-238.87	7.47	0.00	-0.5048E-04	0.1253E-03
14	-172.17	0.78	0.00	-0.3638E-04	0.9593E-04
15	-260.66	-6.08	0.00	-0.5508E-04	0.1345E-03
16	-353.70	-9.43	0.00	-0.7474E-04	0.1720E-03
17	-415.05	-13.57	0.00	-0.8771E-04	0.1913E-03
18	-371.41	-16.21	0.00	-0.7849E-04	0.1603E-03
19	-244.73	-16.58	0.00	-0.5171E-04	0.9688E-04
20	-27.04	-16.58	0.00	-0.5714E-05	-0.5714E-05

STEEL STRESS AND CRACK WIDTHS FOR CONCRETE-GROUP 1, LOAD STEP 1
NOTE: CRACK WIDTH IS REDUCED TO SERVICE-LOAD LEVEL.
ALL OTHER RESPONSES ARE AT FACTORED LOAD LEVEL.

NODE	INNER CAGE psi	OUTER CAGE psi	MAX STRESS TO YIELD ratio	CRACK WIDTH inches
1	3500.81	-309.34	0.0583	0.00000
2	3389.29	-309.00	0.0565	0.00000
3	3047.90	-305.85	0.0508	0.00000
4	2477.46	-300.57	0.0413	0.00000
5	1550.57	-321.02	0.0258	0.00000
6	9.85	-216.38	0.0036	0.00000
7	-149.95	-77.08	0.0025	0.00000
8	42.45	6069.50	0.1012	0.00000
9	-627.78	2911.73	0.0485	0.00000
10	-899.93	4214.04	0.0702	0.00000
11	-1051.88	3421.47	0.0570	0.00000
12	-1077.81	3439.50	0.0573	0.00000
13	-1026.62	3265.31	0.0544	0.00000
14	-847.10	2666.57	0.0444	0.00000
15	-1145.36	3525.05	0.0588	0.00000
16	-1363.34	4207.19	0.0701	0.00000
17	-1413.78	4370.38	0.0728	0.00000
18	-1232.82	3523.49	0.0587	0.00000
19	-858.81	2100.83	0.0350	0.00000
20	-182.11	-182.11	0.0030	0.00000

ASSESSMENT SUMMARY CONCRETE-GROUP 1, LOAD-STEP 1

LRFD SUMMARY EVALUATION FOR GROUP 1, LOAD STEP 1

DESIGN-CRITERION	CONTROL NODE	FACTORED DEMAND	FACTORED CAPACITY	RATIO VALUE
STEEL YIELDING (psi)	8	6069.5	57000.0	0.106
CONCRETE CRUSHING (psi)	17	415.1	4875.0	0.085
SHEAR FAILURE (lbs/in)	18	158.1	1498.9	0.105
RADIAL-TENSION FAIL (psi)	1	0.7	69.6	0.010

LRFD SERVICE-LOAD PERFORMANCE MEASURES FOR GROUP 1, LOAD STEP 1

NODE NUMBER FOR MAXIMUM CRACK WIDTH 1

MAXIMUM CRACK WIDTH AT SERVICE LOAD (inches) 0.00000

LRFD RATIO: MAX-CRACK-WIDTH / ALLOWABLE 0.00

SPAN LENGTH FOR AUXILIARY EQUATIONS (inches)...... 348.00

+ +

FINITE ELEMENT OUTPUT FOR LOAD STEP 4

+ +

CONCRETE, FACTORED-EVALUATION FOR GROUP 1, LOAD-STEP 4

STRUCTURAL RESPONSES OF CONCRETE-GROUP 1, LOAD-STEP 4
COORDINATES, DISPLACEMENTS AND CRACK DEPTHS ARE INCHES
Y-BAR IS "NEUTRAL AXIS" LOCATION FROM INTERIOR, INCHES
PRESSURES ARE LB/IN**2
MOMENTS ARE IN-LB/IN
THRUST AND SHEAR ARE LB/IN

LOCAL NODE	X-COORD. Y-COORD.	X-DISP. Y-DISP.	N-PRES. S-PRES.	MOMENT THRUST	Y-BAR CRACK DEPTH
1	0.00	0.00000E+00	-0.27200E+00	0.22576E+04	0.74181E+01
	101.00	-0.33303E+00	-0.35419E-03	-0.16570E+03	0.66103E+01
2	13.43	-0.73917E-04	-0.27154E+00	0.21945E+04	0.74181E+01
	100.76	-0.33102E+00	-0.93276E-02	-0.16655E+03	0.65852E+01
3	26.84	0.11634E-03	-0.27108E+00	0.19999E+04	0.74181E+01
	100.08	-0.32511E+00	-0.18301E-01	-0.16780E+03	0.65011E+01
4	40.22	0.79814E-03	-0.27033E+00	0.16747E+04	0.74181E+01
	98.95	-0.31568E+00	-0.27255E-01	-0.16989E+03	0.63168E+01
5	53.56	0.21400E-02	-0.26928E+00	0.12204E+04	0.72278E+01
	97.38	-0.30337E+00	-0.36178E-01	-0.17279E+03	0.57206E+01
6	66.84	0.41609E-02	-0.26794E+00	0.63907E+03	0.48856E+01
	95.38	-0.28958E+00	-0.45069E-01	-0.17651E+03	0.00000E+00
7	80.05	0.67210E-02	-0.26672E+00	-0.66493E+02	0.48856E+01
	92.93	-0.27550E+00	-0.53996E-01	-0.18104E+03	0.00000E+00
8	93.16	0.96948E-02	-0.26562E+00	-0.89345E+03	0.15738E+01
	90.05	-0.26161E+00	-0.62980E-01	-0.18637E+03	0.77057E+01

9	106.18	0.12585E-01	-0.26790E+00	-0.18387E+04	0.25648E+01
	86.73	-0.24969E+00	-0.72959E-01	-0.19253E+03	0.64974E+01
10	119.08	0.14785E-01	-0.28441E+00	-0.29011E+04	0.27446E+01
	82.99	-0.24168E+00	-0.87655E-01	-0.19967E+03	0.71675E+01
11	131.84	0.16079E-01	-0.32549E+00	-0.40900E+04	0.34229E+01
	78.82	-0.23736E+00	-0.11224E+00	-0.20825E+03	0.79120E+01
12	144.47	0.16472E-01	-0.39417E+00	-0.54325E+04	0.40506E+01
	74.23	-0.23599E+00	-0.15068E+00	-0.21900E+03	0.98720E+01
13	156.93	0.16087E-01	-0.50558E+00	-0.69762E+04	0.48788E+01
	69.23	-0.23672E+00	-0.21269E+00	-0.23308E+03	0.12562E+02
14	169.22	0.15096E-01	-0.15643E+01	-0.87987E+04	0.64069E+01
	63.82	-0.23879E+00	-0.15060E+01	-0.27065E+03	0.17409E+02
15	171.39	0.12884E-01	-0.46940E+00	-0.78805E+04	0.49926E+01
	54.75	-0.23926E+00	-0.69169E+00	-0.30779E+03	0.12909E+02
16	172.91	0.98784E-02	-0.38626E+00	-0.68312E+04	0.40905E+01
	45.55	-0.23967E+00	-0.55917E+00	-0.32017E+03	0.10057E+02
17	173.78	0.55809E-02	-0.33582E+00	-0.56207E+04	0.35348E+01
	36.26	-0.23997E+00	-0.48451E+00	-0.32762E+03	0.82991E+01
18	174.00	-0.38990E-03	0.15999E+00	-0.42298E+04	0.33381E+01
	26.94	-0.24000E+00	-0.39931E+00	-0.33686E+03	0.74757E+01
19	174.00	-0.11842E-01	-0.23803E+00	-0.20933E+04	0.32429E+01
	13.47	-0.23983E+00	-0.42063E+00	-0.35323E+03	0.68762E+01
20	174.00	-0.24862E-01	-0.63606E+00	0.11914E-09	0.60775E+01
	0.00	-0.23972E+00	-0.44195E+00	-0.37292E+03	0.00000E+00

SHEAR FORCE DIAGNOSTCS FOR CONCRETE-GROUP 1, LOAD STEP 4
-- V-factor is coefficient of sqrt(PFPC) equal to capacity.
-- Shear depth "d" is negative if measured from outer wall.
-- Stirrup load is excess shear force above capacity.

NODE	EQUIVALENT V-factor	SHEAR CAPACITY lbs/inch	APPLIED SHEAR lbs/inch	APPLIED/ CAPACITY ratio	SHEAR DEPTH-d inches	STIRRUP LOAD lbs/inch
1	1.68	1083.98	-0.20	0.000	8.00	0.00
2	1.68	1084.02	9.59	0.009	8.00	0.00
3	1.68	1084.09	19.35	0.018	8.00	0.00
4	1.68	1084.20	29.02	0.027	8.00	0.00
5	1.68	1084.36	38.56	0.036	8.00	0.00
6	3.05	1965.80	47.91	0.024	8.00	0.00
7	4.50	2719.05	57.05	0.021	-7.50	0.00
8	2.27	1386.45	65.98	0.048	-7.56	0.00
9	2.00	1218.64	74.74	0.061	-7.56	0.00
10	1.83	1206.17	83.81	0.069	-8.19	0.00
11	1.92	1532.58	94.25	0.061	-9.88	0.00
12	1.68	1731.73	107.45	0.062	-12.75	0.00
13	1.50	2029.51	125.33	0.062	-16.75	0.00
14	1.34	2648.45	18.63	0.007	-24.50	0.00

15	1.49	2076.59	-105.48	0.051	-17.31	0.00
16	1.68	1750.91	-121.15	0.069	-12.94	0.00
17	1.88	1573.03	-139.47	0.089	-10.38	0.00
18	2.20	1681.97	-153.87	0.091	-9.50	0.00
19	3.23	2470.83	-157.01	0.064	-9.50	0.00
20	4.50	3625.40	-153.80	0.042	10.00	0.00

STRESS AND STRAIN MEASURES FOR CONCRETE-GROUP 1, LOAD STEP 4

NODE	MAXIMUM COMPRESSION psi	AVERAGE SHEAR psi	RADIAL TENSION psi	INNER-WALL STRAIN in/in	OUTER-WALL STRAIN in/in
1	-312.95	-0.03	0.69	0.1585E-03	-0.6613E-04
2	-305.48	1.24	0.67	0.1538E-03	-0.6455E-04
3	-282.12	2.50	0.60	0.1393E-03	-0.5962E-04
4	-243.07	3.74	0.50	0.1152E-03	-0.5137E-04
5	-185.82	4.97	0.32	0.7586E-04	-0.3927E-04
6	-53.42	6.18	0.01	0.3937E-05	-0.1129E-04
7	-20.66	7.36	0.00	-0.4365E-05	-0.2781E-05
8	-286.79	8.44	0.00	-0.6060E-04	0.2408E-03
9	-266.48	9.57	0.00	-0.5631E-04	0.1308E-03
10	-363.25	9.93	0.00	-0.7676E-04	0.1866E-03
11	-314.12	9.31	0.00	-0.6638E-04	0.1454E-03
12	-276.91	8.27	0.00	-0.5852E-04	0.1358E-03
13	-233.14	7.37	0.00	-0.4927E-04	0.1213E-03
14	-169.29	0.75	0.00	-0.3577E-04	0.9308E-04
15	-256.39	-6.01	0.00	-0.5418E-04	0.1300E-03
16	-347.37	-9.19	0.00	-0.7341E-04	0.1659E-03
17	-407.84	-13.13	0.00	-0.8618E-04	0.1844E-03
18	-366.57	-15.78	0.00	-0.7746E-04	0.1545E-03
19	-241.38	-16.10	0.00	-0.5101E-04	0.9187E-04
20	-28.99	-15.77	0.00	-0.6127E-05	-0.6127E-05

STEEL STRESS AND CRACK WIDTHS FOR CONCRETE-GROUP 1, LOAD STEP 4
NOTE: CRACK WIDTH IS REDUCED TO SERVICE-LOAD LEVEL.
ALL OTHER RESPONSES ARE AT FACTORED LOAD LEVEL.

NODE	INNER CAGE psi	OUTER CAGE psi	MAX STRESS TO YIELD ratio	CRACK WIDTH inches
1	3618.59	-318.10	0.0603	0.00000
2	3508.88	-317.78	0.0585	0.00000
3	3172.65	-314.70	0.0529	0.00000
4	2610.73	-309.53	0.0435	0.00000
5	1683.67	-334.16	0.0281	0.00000
6	28.42	-238.42	0.0040	0.00000
7	-129.01	-101.24	0.0022	0.00000
8	-22.34	5287.56	0.0881	0.00000
9	-609.21	2687.84	0.0448	0.00000
10	-875.46	3984.44	0.0664	0.00000
11	-1024.59	3270.29	0.0545	0.00000
12	-1052.80	3311.78	0.0552	0.00000
13	-1005.25	3160.06	0.0527	0.00000
14	-835.86	2586.09	0.0431	0.00000
15	-1134.14	3402.01	0.0567	0.00000
16	-1351.35	4051.71	0.0675	0.00000

17	-1406.79	4203.11	0.0701	0.00000
18	-1236.44	3384.10	0.0564	0.00000
19	-866.60	1979.19	0.0330	0.00000
20	-195.25	-195.25	0.0033	0.00000

ASSESSMENT SUMMARY CONCRETE-GROUP 1, LOAD-STEP 4

LRFD SUMMARY EVALUATION FOR GROUP 1, LOAD STEP 4

DESIGN-CRITERION	CONTROL NODE	FACTORED DEMAND	FACTORED CAPACITY	RATIO VALUE
STEEL YIELDING (psi)	8	5287.6	57000.0	0.093
CONCRETE CRUSHING (psi)	17	407.8	4875.0	0.084
SHEAR FAILURE (lbs/in)	18	153.9	1513.8	0.102
RADIAL-TENSION FAIL (psi)	1	0.7	69.6	0.010

LRFD SERVICE-LOAD PERFORMANCE MEASURES FOR GROUP 1, LOAD STEP 4

NODE NUMBER FOR MAXIMUM CRACK WIDTH 1

MAXIMUM CRACK WIDTH AT SERVICE LOAD (inches) 0.00000

LRFD RATIO: MAX-CRACK-WIDTH / ALLOWABLE 0.00

SPAN LENGTH FOR AUXILIARY EQUATIONS (inches)...... 348.00

+ +

FINITE ELEMENT OUTPUT FOR LOAD STEP 11

+ +

CONCRETE, FACTORED-EVALUATION FOR GROUP 1, LOAD-STEP 11

STRUCTURAL RESPONSES OF CONCRETE-GROUP 1, LOAD-STEP 11
COORDINATES, DISPLACEMENTS AND CRACK DEPTHS ARE INCHES
Y-BAR IS "NEUTRAL AXIS" LOCATION FROM INTERIOR, INCHES
PRESSURES ARE LB/IN**2
MOMENTS ARE IN-LB/IN
THRUST AND SHEAR ARE LB/IN

LOCAL X-COORD. X-DISP. N-PRES. MOMENT Y-BAR

28x8under8c4MOD.out

NODE	Y-COORD.	Y-DISP.	S-PRES.	THRUST	CRACK DEPTH
1	0.00	0.00000E+00	-0.85257E+01	0.22935E+05	0.74181E+01
	101.00	-0.20496E+01	-0.17027E+00	-0.18447E+04	0.69770E+01
2	13.43	-0.85978E-03	-0.88938E+01	0.22507E+05	0.74181E+01
	100.76	-0.20292E+01	-0.12482E+01	-0.18640E+04	0.69644E+01
3	26.84	0.98489E-03	-0.92619E+01	0.21145E+05	0.74181E+01
	100.08	-0.19686E+01	-0.23262E+01	-0.18920E+04	0.69286E+01
4	40.22	0.79624E-02	-0.98753E+01	0.18797E+05	0.74181E+01
	98.95	-0.18706E+01	-0.33143E+01	-0.19367E+04	0.68557E+01
5	53.56	0.22046E-01	-0.10647E+02	0.15372E+05	0.74181E+01
	97.38	-0.17398E+01	-0.37572E+01	-0.19941E+04	0.67146E+01
6	66.84	0.44437E-01	-0.11676E+02	0.10757E+05	0.74181E+01
	95.38	-0.15833E+01	-0.40815E+01	-0.20599E+04	0.63335E+01
7	80.05	0.74962E-01	-0.12754E+02	0.47977E+04	0.50615E+01
	92.93	-0.14143E+01	-0.43055E+01	-0.21332E+04	0.60264E+00
8	93.16	0.11167E+00	-0.13962E+02	-0.26686E+04	0.20283E+01
	90.05	-0.12431E+01	-0.45252E+01	-0.22135E+04	0.67153E+01
9	106.18	0.15140E+00	-0.15263E+02	-0.11824E+05	0.25648E+01
	86.73	-0.10807E+01	-0.42843E+01	-0.22982E+04	0.65550E+01
10	119.08	0.18969E+00	-0.16221E+02	-0.22865E+05	0.27446E+01
	82.99	-0.94370E+00	-0.39196E+01	-0.23841E+04	0.73313E+01
11	131.84	0.22332E+00	-0.16812E+02	-0.35938E+05	0.34229E+01
	78.82	-0.83632E+00	-0.36956E+01	-0.24718E+04	0.82700E+01
12	144.47	0.25142E+00	-0.17174E+02	-0.51131E+05	0.40506E+01
	74.23	-0.75562E+00	-0.36014E+01	-0.25639E+04	0.10441E+02
13	156.93	0.27452E+00	-0.18012E+02	-0.68513E+05	0.48788E+01
	69.23	-0.69540E+00	-0.34800E+01	-0.26621E+04	0.13464E+02
14	169.22	0.29377E+00	-0.22222E+02	-0.88249E+05	0.55838E+01
	63.82	-0.64933E+00	-0.16961E+02	-0.29215E+04	0.19508E+02
15	171.39	0.32074E+00	-0.99149E+01	-0.77505E+05	0.49926E+01
	54.75	-0.64212E+00	-0.44666E+01	-0.31162E+04	0.13850E+02
16	172.91	0.34060E+00	-0.98615E+01	-0.65602E+05	0.41221E+01
	45.55	-0.63802E+00	-0.43475E+01	-0.30818E+04	0.10630E+02
17	173.78	0.34850E+00	-0.10508E+02	-0.52550E+05	0.36636E+01
	36.26	-0.63631E+00	-0.45545E+01	-0.30367E+04	0.87105E+01
18	174.00	0.34089E+00	-0.11241E+02	-0.38420E+05	0.33595E+01
	26.94	-0.63543E+00	-0.47084E+01	-0.30274E+04	0.79406E+01
19	174.00	0.30371E+00	-0.45471E+01	-0.18797E+05	0.30043E+01
	13.47	-0.63383E+00	-0.21478E+01	-0.30644E+04	0.78179E+01
20	174.00	0.25206E+00	0.21471E+01	0.74351E-10	0.60775E+01
	0.00	-0.63286E+00	0.41277E+00	-0.31074E+04	0.00000E+00

28x8under8c4MOD.out

SHEAR FORCE DIAGNOSTCS FOR CONCRETE-GROUP 1, LOAD STEP 11
-- V-factor is coefficient of sqrt(PFPC) equal to capacity.
-- Shear depth "d" is negative if measured from outer wall.
-- Stirrup load is excess shear force above capacity.

NODE	EQUIVALENT V-factor	SHEAR CAPACITY lbs/inch	APPLIED SHEAR lbs/inch	APPLIED/ CAPACITY ratio	SHEAR DEPTH-d inches	STIRRUP LOAD lbs/inch
1	1.82	1174.23	-2.81	0.002	8.00	0.00
2	1.82	1175.27	66.64	0.057	8.00	0.00
3	1.82	1176.77	138.11	0.117	8.00	0.00
4	1.83	1179.18	214.93	0.182	8.00	0.00
5	1.83	1182.26	299.33	0.253	8.00	0.00
6	1.96	1260.98	393.68	0.312	8.00	0.00
7	4.43	2855.88	499.83	0.175	8.00	0.00
8	4.50	2741.89	618.83	0.226	-7.56	0.00
9	3.28	1999.60	751.92	0.376	-7.56	0.00
10	2.17	1434.00	897.77	0.626	-8.19	0.00
11	2.10	1671.57	1052.33	0.630	-9.88	0.00
12	1.81	1863.92	1212.73	0.651	-12.75	0.00
13	1.67	2260.73	1381.93	0.611	-16.75	0.00
14	1.41	2777.81	158.78	0.057	-24.50	0.00
15	1.59	2222.62	-1214.15	0.546	-17.31	0.00
16	1.83	1905.91	-1337.92	0.702	-12.94	0.00
17	2.08	1736.44	-1457.31	0.839	-10.38	0.00
18	2.55	1950.07	-1485.89	0.762	-9.50	0.00
19	3.59	2749.41	-1426.13	0.519	-9.50	0.00
20	4.50	3625.40	-1364.88	0.376	10.00	0.00

STRESS AND STRAIN MEASURES FOR CONCRETE-GROUP 1, LOAD STEP 11

NODE	MAXIMUM COMPRESSION psi	AVERAGE SHEAR psi	RADIAL TENSION psi	INNER-WALL STRAIN in/in	OUTER-WALL STRAIN in/in
1	-3216.91	-0.36	6.92	0.1602E-02	-0.6798E-03
2	-3169.31	8.60	6.78	0.1569E-02	-0.6697E-03
3	-3010.34	17.82	6.32	0.1468E-02	-0.6361E-03
4	-2735.29	27.73	5.55	0.1292E-02	-0.5780E-03
5	-2327.68	38.62	4.41	0.1036E-02	-0.4919E-03
6	-1723.82	50.80	2.74	0.6565E-03	-0.3643E-03
7	-489.24	64.49	0.00	0.1727E-04	-0.1034E-03
8	-1316.65	79.21	0.00	-0.2782E-03	0.5581E-03
9	-1938.09	96.24	0.00	-0.4095E-03	0.7939E-03
10	-3038.20	106.40	0.00	-0.6420E-03	0.1434E-02
11	-2873.89	103.93	0.00	-0.6073E-03	0.1254E-02
12	-2681.41	93.29	0.00	-0.5666E-03	0.1262E-02
13	-2335.37	81.29	0.00	-0.4935E-03	0.1182E-02
14	-1704.94	6.42	0.00	-0.3603E-03	0.9742E-03
15	-2532.23	-69.13	0.00	-0.5351E-03	0.1276E-02
16	-3299.15	-101.45	0.00	-0.7066E-03	0.1594E-02
17	-3565.56	-137.16	0.00	-0.8143E-03	0.1734E-02
18	-3291.60	-152.40	0.00	-0.7036E-03	0.1406E-02
19	-2196.60	-146.27	0.00	-0.4642E-03	0.8964E-03
20	-241.59	-139.99	0.00	-0.5105E-04	-0.5105E-04

28x8under8c4MOD.out

STEEL STRESS AND CRACK WIDTHS FOR CONCRETE-GROUP 1, LOAD STEP 11
NOTE: CRACK WIDTH IS REDUCED TO SERVICE-LOAD LEVEL.
ALL OTHER RESPONSES ARE AT FACTORED LOAD LEVEL.

NODE	INNER CAGE psi	OUTER CAGE psi	MAX STRESS TO YIELD ratio	CRACK WIDTH inches
1	36510.22	-3484.21	0.6085	0.00117
2	35743.49	-3503.42	0.5957	0.00085
3	33361.03	-3511.92	0.5560	0.00000
4	29257.11	-3520.98	0.4876	0.00000
5	23270.35	-3504.72	0.3878	0.00000
6	14415.64	-3476.03	0.2403	0.00000
7	-218.61	-2333.39	0.0389	0.00000
8	-3569.43	11164.73	0.1861	0.00000
9	-5428.95	15773.40	0.2629	0.00000
10	-8079.71	30224.95	0.5037	0.00000
11	-9769.07	27969.68	0.4662	0.00129
12	-10414.51	30665.20	0.5111	0.00059
13	-10180.22	30726.86	0.5121	0.00000
14	-8331.33	27107.57	0.4518	0.00000
15	-11225.84	33387.00	0.5565	0.00000
16	-13019.91	38931.96	0.6489	0.00392
17	-13334.27	39493.22	0.6582	0.00580
18	-11218.01	30796.93	0.5133	0.00271
19	-7565.83	19534.05	0.3256	0.00000
20	-1626.96	-1626.96	0.0271	0.00000

ASSESSMENT SUMMARY CONCRETE-GROUP 1, LOAD-STEP 11

LRFD SUMMARY EVALUATION FOR GROUP 1, LOAD STEP 11

DESIGN-CRITERION	CONTROL NODE	FACTORED DEMAND	FACTORED CAPACITY	RATIO VALUE
STEEL YIELDING (psi)	17	39493.2	57000.0	0.693
CONCRETE CRUSHING (psi)	17	3565.6	4875.0	0.731
SHEAR FAILURE (lbs/in)	17	1457.3	1562.8	0.932
RADIAL-TENSION FAIL (psi)	1	6.9	69.6	0.099

LRFD SERVICE-LOAD PERFORMANCE MEASURES FOR GROUP 1, LOAD STEP 11

NODE NUMBER FOR MAXIMUM CRACK WIDTH 17
MAXIMUM CRACK WIDTH AT SERVICE LOAD (inches) 0.00580
LRFD RATIO: MAX-CRACK-WIDTH / ALLOWABLE 0.58
SPAN LENGTH FOR AUXILIARY EQUATIONS (inches)..... 348.00

28x8under8c4MOD.out

+ +

FINITE ELEMENT OUTPUT FOR LOAD STEP 15

+ +

CONCRETE, FACTORED-EVALUATION FOR GROUP 1, LOAD-STEP 15

STRUCTURAL RESPONSES OF CONCRETE-GROUP 1, LOAD-STEP 15
COORDINATES, DISPLACEMENTS AND CRACK DEPTHS ARE INCHES
Y-BAR IS "NEUTRAL AXIS" LOCATION FROM INTERIOR, INCHES
PRESSURES ARE LB/IN**2
MOMENTS ARE IN-LB/IN
THRUST AND SHEAR ARE LB/IN

LOCAL NODE	X-COORD. Y-COORD.	X-DISP. Y-DISP.	N-PRES. S-PRES.	MOMENT THRUST	Y-BAR CRACK DEPTH
1	0.00	0.00000E+00	-0.10461E+02	0.30017E+05	0.73190E+01
	101.00	-0.26041E+01	-0.12598E+00	-0.22692E+04	0.69902E+01
2	13.43	-0.10324E-02	-0.11259E+02	0.29495E+05	0.73190E+01
	100.76	-0.25770E+01	-0.13656E+01	-0.22907E+04	0.69805E+01
3	26.84	0.15246E-02	-0.12057E+02	0.27804E+05	0.73190E+01
	100.08	-0.24967E+01	-0.26052E+01	-0.23222E+04	0.69533E+01
4	40.22	0.10897E-01	-0.13129E+02	0.24812E+05	0.73391E+01
	98.95	-0.23668E+01	-0.37772E+01	-0.23735E+04	0.68968E+01
5	53.56	0.29701E-01	-0.14280E+02	0.20351E+05	0.74181E+01
	97.38	-0.21933E+01	-0.43947E+01	-0.24408E+04	0.67783E+01
6	66.84	0.59537E-01	-0.15592E+02	0.14242E+05	0.74181E+01
	95.38	-0.19855E+01	-0.49469E+01	-0.25205E+04	0.64430E+01
7	80.05	0.10018E+00	-0.16794E+02	0.62874E+04	0.56707E+01
	92.93	-0.17609E+01	-0.54132E+01	-0.26119E+04	0.15705E+01
8	93.16	0.14910E+00	-0.17985E+02	-0.36900E+04	0.20283E+01
	90.05	-0.15332E+01	-0.58853E+01	-0.27149E+04	0.68048E+01
9	106.18	0.20210E+00	-0.19100E+02	-0.15860E+05	0.25648E+01
	86.73	-0.13174E+01	-0.59488E+01	-0.28274E+04	0.66474E+01
10	119.08	0.25306E+00	-0.19895E+02	-0.30372E+05	0.28493E+01
	82.99	-0.11355E+01	-0.58013E+01	-0.29456E+04	0.73652E+01
11	131.84	0.29776E+00	-0.20225E+02	-0.47329E+05	0.35466E+01
	78.82	-0.99316E+00	-0.56217E+01	-0.30684E+04	0.83055E+01
12	144.47	0.33510E+00	-0.20221E+02	-0.66756E+05	0.41431E+01
	74.23	-0.88621E+00	-0.53972E+01	-0.31959E+04	0.10482E+02
13	156.93	0.36585E+00	-0.20703E+02	-0.88642E+05	0.44678E+01

	69.23	-0.80609E+00	-0.51904E+01	-0.33287E+04	0.13574E+02
14	169.22	0.39167E+00	-0.24785E+02	-0.11307E+06	0.55838E+01
	63.82	-0.74438E+00	-0.19721E+02	-0.36303E+04	0.19611E+02
15	171.39	0.42816E+00	-0.11069E+02	-0.99297E+05	0.45538E+01
	54.75	-0.73467E+00	-0.47517E+01	-0.38391E+04	0.13962E+02
16	172.91	0.45554E+00	-0.11587E+02	-0.83989E+05	0.42445E+01
	45.55	-0.72910E+00	-0.48469E+01	-0.37828E+04	0.10640E+02
17	173.78	0.46746E+00	-0.12941E+02	-0.67222E+05	0.38554E+01
	36.26	-0.72678E+00	-0.51325E+01	-0.37147E+04	0.87009E+01
18	174.00	0.45930E+00	-0.14406E+02	-0.49142E+05	0.34579E+01
	26.94	-0.72567E+00	-0.47981E+01	-0.36894E+04	0.79610E+01
19	174.00	0.41370E+00	-0.52472E+01	-0.24095E+05	0.30043E+01
	13.47	-0.72372E+00	-0.24249E+01	-0.37239E+04	0.78941E+01
20	174.00	0.34948E+00	0.39111E+01	-0.89358E-10	0.60775E+01
	0.00	-0.72254E+00	-0.51606E-01	-0.37706E+04	0.00000E+00

SHEAR FORCE DIAGNOSTCS FOR CONCRETE-GROUP 1, LOAD STEP 15
-- V-factor is coefficient of sqrt(PFPC) equal to capacity.
-- Shear depth "d" is negative if measured from outer wall.
-- Stirrup load is excess shear force above capacity.

NODE	EQUIVALENT V-factor	SHEAR CAPACITY lbs/inch	APPLIED SHEAR lbs/inch	APPLIED/ CAPACITY ratio	SHEAR DEPTH-d inches	STIRRUP LOAD lbs/inch
1	1.86	1197.05	-4.68	0.004	8.00	0.00
2	1.86	1198.20	82.42	0.069	8.00	0.00
3	1.86	1199.90	174.37	0.145	8.00	0.00
4	1.86	1202.65	277.48	0.231	8.00	0.00
5	1.87	1206.27	393.52	0.326	8.00	0.00
6	1.98	1274.77	523.56	0.411	8.00	0.00
7	4.47	2879.92	667.59	0.232	8.00	0.00
8	4.50	2741.89	824.53	0.301	-7.56	0.00
9	3.27	1995.21	993.36	0.498	-7.56	0.00
10	2.18	1437.98	1171.61	0.815	-8.19	0.00
11	2.15	1708.21	1354.59	0.793	-9.88	0.00
12	1.85	1899.54	1538.06	0.810	-12.75	0.00
13	1.65	2233.60	1724.32	0.772	-16.75	0.00
14	1.42	2812.40	171.07	0.061	-24.50	0.00
15	1.62	2260.21	-1559.13	0.690	-17.31	0.00
16	1.86	1945.25	-1719.65	0.884	-12.94	0.00
17	2.12	1777.35	-1868.23	1.051	-10.38	90.88
18	2.60	1989.34	-1898.98	0.955	-9.50	0.00
19	3.65	2793.72	-1824.14	0.653	-9.50	0.00
20	4.50	3444.13	-1753.46	0.509	-9.50	0.00

STRESS AND STRAIN MEASURES FOR CONCRETE-GROUP 1, LOAD STEP 15

	MAXIMUM COMPRESSION	AVERAGE SHEAR	RADIAL TENSION	INNER-WALL STRAIN	OUTER-WALL STRAIN

NODE	psi	psi	psi	in/in	in/in
1	-3777.80	-0.60	9.18	0.2124E-02	-0.9000E-03
2	-3744.46	10.63	9.00	0.2083E-02	-0.8866E-03
3	-3631.40	22.50	8.42	0.1952E-02	-0.8409E-03
4	-3430.96	35.80	7.40	0.1721E-02	-0.7599E-03
5	-3036.71	50.78	5.90	0.1381E-02	-0.6417E-03
6	-2254.51	67.56	3.74	0.8911E-03	-0.4764E-03
7	-654.22	86.14	0.01	0.3762E-04	-0.1382E-03
8	-1686.09	105.53	0.00	-0.3563E-03	0.7441E-03
9	-2545.53	127.14	0.00	-0.5379E-03	0.1076E-02
10	-3670.31	138.85	0.00	-0.8566E-03	0.1931E-02
11	-3533.73	133.79	0.00	-0.8014E-03	0.1666E-02
12	-3379.06	118.31	0.00	-0.7389E-03	0.1656E-02
13	-2993.20	101.43	0.00	-0.6325E-03	0.1547E-02
14	-2170.98	6.91	0.00	-0.4588E-03	0.1254E-02
15	-3211.63	-88.77	0.00	-0.6787E-03	0.1653E-02
16	-3814.66	-130.40	0.00	-0.9149E-03	0.2061E-02
17	-4179.15	-175.83	0.00	-0.1062E-02	0.2245E-02
18	-3797.10	-194.77	0.00	-0.9078E-03	0.1819E-02
19	-2778.75	-187.09	0.00	-0.5872E-03	0.1158E-02
20	-293.16	-179.84	0.00	-0.6195E-04	-0.6195E-04

STEEL STRESS AND CRACK WIDTHS FOR CONCRETE-GROUP 1, LOAD STEP 15
NOTE: CRACK WIDTH IS REDUCED TO SERVICE-LOAD LEVEL.
ALL OTHER RESPONSES ARE AT FACTORED LOAD LEVEL.

NODE	INNER CAGE psi	OUTER CAGE psi	MAX STRESS TO YIELD ratio	CRACK WIDTH inches
1	48401.67	-4593.89	0.8067	0.00504
2	47445.64	-4597.46	0.7908	0.00466
3	44404.29	-4546.95	0.7401	0.00344
4	39034.65	-4450.53	0.6506	0.00131
5	31122.44	-4333.57	0.5187	0.00000
6	19680.57	-4287.74	0.3280	0.00000
7	77.98	-3004.55	0.0501	0.00000
8	-4384.69	15002.02	0.2500	0.00000
9	-6918.02	21520.56	0.3587	0.00000
10	-10675.54	40756.23	0.6793	0.00223
11	-12831.25	37208.71	0.6201	0.00430
12	-13537.81	40267.95	0.6711	0.00372
13	-12941.69	40270.89	0.6712	0.00112
14	-10576.53	34911.45	0.5819	0.00000
15	-14126.54	43307.78	0.7218	0.00198
16	-16871.31	50320.96	0.8387	0.00763
17	-17478.80	51079.16	0.8513	0.00957
18	-14447.65	39866.02	0.6644	0.00566
19	-9442.55	25320.77	0.4220	0.00000
20	-1974.22	-1974.22	0.0329	0.00000

ASSESSMENT SUMMARY CONCRETE-GROUP 1, LOAD-STEP 15

LRFD SUMMARY EVALUATION FOR GROUP 1, LOAD STEP 15

DESIGN-CRITERION	CONTROL	FACTORED	FACTORED	RATIO

28x8under8c4MOD.out

	NODE	DEMAND	CAPACITY	VALUE
STEEL YIELDING (psi)	17	51079.2	57000.0	0.896
CONCRETE CRUSHING (psi)	17	4179.1	4875.0	0.857
SHEAR FAILURE (lbs/in)	17	1868.2	1599.6	1.168
RADIAL-TENSION FAIL (psi)	1	9.2	69.6	0.132

LRFD SERVICE-LOAD PERFORMANCE MEASURES FOR GROUP 1, LOAD STEP 15

NODE NUMBER FOR MAXIMUM CRACK WIDTH	17
MAXIMUM CRACK WIDTH AT SERVICE LOAD (inches)	0.00957
LRFD RATIO: MAX-CRACK-WIDTH / ALLOWABLE	0.96
SPAN LENGTH FOR AUXILIARY EQUATIONS (inches).....	348.00

* * * * NORMAL EXIT FROM CANDE * * * *

28x8under8c1MOD.out

*** WELCOME TO CANDE-2013(version 3/1/2013) ***

MASTER CONTROL AND PIPE-TYPE DATA FOR PROBLEM # 1

USER TITLE: 28x8_u8.6_c1

* * * BOUNDARY CONDITIONS * * *
(FORCES = LBS; DISPLACEMENTS = INCHES; ROTATIONS = DEGREES)

BOUNDARY NODE	LOAD STEP	X-FORCE OR X-DISPLACEMENT	Y-FORCE OR Y-DISPLACEMENT	X-Y ROTATION BEAM ROTATIONAL BOUNDARY CONDITIONS
287	12	F = 0.0000E+00	F = -0.2280E+02	0.0000E+00 F
287	13	F = 0.0000E+00	F = -0.2280E+02	0.0000E+00 F
287	14	F = 0.0000E+00	F = -0.2280E+02	0.0000E+00 F
287	15	F = 0.0000E+00	F = -0.2280E+02	0.0000E+00 F
293	12	F = 0.0000E+00	F = 0.0000E+00	0.0000E+00 F
293	13	F = 0.0000E+00	F = 0.0000E+00	0.0000E+00 F
293	14	F = 0.0000E+00	F = 0.0000E+00	0.0000E+00 F
293	15	F = 0.0000E+00	F = 0.0000E+00	0.0000E+00 F
287	15	F = 0.0000E+00	F = -0.7000E+01	0.0000E+00 F
288	15	F = 0.0000E+00	F = -0.1400E+02	0.0000E+00 F
289	15	F = 0.0000E+00	F = -0.1400E+02	0.0000E+00 F
290	15	F = 0.0000E+00	F = -0.1400E+02	0.0000E+00 F
291	15	F = 0.0000E+00	F = -0.1400E+02	0.0000E+00 F
292	15	F = 0.0000E+00	F = -0.1400E+02	0.0000E+00 F
293	15	F = 0.0000E+00	F = -0.1400E+02	0.0000E+00 F
294	15	F = 0.0000E+00	F = -0.1400E+02	0.0000E+00 F
295	15	F = 0.0000E+00	F = -0.1400E+02	0.0000E+00 F
296	15	F = 0.0000E+00	F = -0.1400E+02	0.0000E+00 F

CONCRETE, FACTORED-EVALUATION FOR GROUP 1, LOAD-STEP 15

28x8under8c1MOD.out

STRUCTURAL RESPONSES OF CONCRETE-GROUP 1, LOAD-STEP 15
COORDINATES, DISPLACEMENTS AND CRACK DEPTHS ARE INCHES
Y-BAR IS "NEUTRAL AXIS" LOCATION FROM INTERIOR, INCHES
PRESSURES ARE LB/IN**2
MOMENTS ARE IN-LB/IN
THRUST AND SHEAR ARE LB/IN

LOCAL NODE	X-COORD. Y-COORD.	X-DISP. Y-DISP.	N-PRES. S-PRES.	MOMENT THRUST	Y-BAR CRACK DEPTH
1	0.00	0.00000E+00	-0.10411E+02	0.26923E+05	0.74705E+01
	101.00	-0.22831E+01	-0.17473E+00	-0.19456E+04	0.70321E+01
2	13.43	-0.91809E-03	-0.10619E+02	0.26362E+05	0.74705E+01
	100.76	-0.22589E+01	-0.16878E+01	-0.19716E+04	0.70151E+01
3	26.84	0.13847E-02	-0.10826E+02	0.24604E+05	0.73612E+01
	100.08	-0.21874E+01	-0.32008E+01	-0.20093E+04	0.69682E+01
4	40.22	0.97211E-02	-0.11271E+02	0.21630E+05	0.74181E+01
	98.95	-0.20723E+01	-0.42359E+01	-0.20676E+04	0.68995E+01
5	53.56	0.26312E-01	-0.11898E+02	0.17386E+05	0.74181E+01
	97.38	-0.19194E+01	-0.46182E+01	-0.21389E+04	0.67550E+01
6	66.84	0.52461E-01	-0.12812E+02	0.11789E+05	0.74181E+01
	95.38	-0.17375E+01	-0.49300E+01	-0.22187E+04	0.63394E+01
7	80.05	0.87837E-01	-0.13774E+02	0.47148E+04	0.50615E+01
	92.93	-0.15420E+01	-0.50469E+01	-0.23053E+04	0.24018E+00
8	93.16	0.13024E+00	-0.14881E+02	-0.39742E+04	0.20283E+01
	90.05	-0.13446E+01	-0.51266E+01	-0.23977E+04	0.70029E+01
9	106.18	0.17584E+00	-0.16064E+02	-0.14437E+05	0.25648E+01
	86.73	-0.11588E+01	-0.50464E+01	-0.24948E+04	0.66654E+01
10	119.08	0.21924E+00	-0.16840E+02	-0.26842E+05	0.28196E+01
	82.99	-0.10036E+01	-0.45598E+01	-0.25934E+04	0.73725E+01
11	131.84	0.25697E+00	-0.17274E+02	-0.41297E+05	0.34327E+01
	78.82	-0.88334E+00	-0.42197E+01	-0.26923E+04	0.83098E+01
12	144.47	0.28821E+00	-0.17483E+02	-0.57857E+05	0.40506E+01
	74.23	-0.79371E+00	-0.39846E+01	-0.27938E+04	0.10476E+02
13	156.93	0.31369E+00	-0.18242E+02	-0.76561E+05	0.44678E+01
	69.23	-0.72723E+00	-0.37669E+01	-0.28998E+04	0.13546E+02
14	169.22	0.33487E+00	-0.22590E+02	-0.97554E+05	0.55838E+01
	63.82	-0.67659E+00	-0.17118E+02	-0.31542E+04	0.19560E+02
15	171.39	0.36448E+00	-0.10196E+02	-0.85571E+05	0.45538E+01
	54.75	-0.66869E+00	-0.43572E+01	-0.33349E+04	0.13935E+02
16	172.91	0.38623E+00	-0.10485E+02	-0.72309E+05	0.42445E+01
	45.55	-0.66420E+00	-0.43565E+01	-0.32899E+04	0.10643E+02
17	173.78	0.39474E+00	-0.11687E+02	-0.57816E+05	0.36636E+01
	36.26	-0.66237E+00	-0.46874E+01	-0.32346E+04	0.87239E+01

18	174.00	0.38611E+00	-0.12897E+02	-0.42218E+05	0.34579E+01
	26.94	-0.66145E+00	-0.44361E+01	-0.32171E+04	0.79582E+01
19	174.00	0.34478E+00	-0.48481E+01	-0.20669E+05	0.30043E+01
	13.47	-0.65974E+00	-0.22554E+01	-0.32515E+04	0.78642E+01
20	174.00	0.28750E+00	0.32008E+01	-0.17462E-09	0.60775E+01
	0.00	-0.65872E+00	-0.74805E-01	-0.32960E+04	0.00000E+00

SHEAR FORCE DIAGNOSTCS FOR CONCRETE-GROUP 1, LOAD STEP 15
-- V-factor is coefficient of sqrt(PFPC) equal to capacity.
-- Shear depth "d" is negative if measured from outer wall.
-- Stirrup load is excess shear force above capacity.

NODE	EQUIVALENT V-factor	SHEAR CAPACITY lbs/inch	APPLIED SHEAR lbs/inch	APPLIED/ CAPACITY ratio	SHEAR DEPTH-d inches	STIRRUP LOAD lbs/inch
1	1.83	1179.66	-2.74	0.002	8.00	0.00
2	1.83	1181.05	86.32	0.073	8.00	0.00
3	1.83	1183.08	176.15	0.149	8.00	0.00
4	1.84	1186.21	268.75	0.227	8.00	0.00
5	1.85	1190.05	366.36	0.308	8.00	0.00
6	2.09	1351.00	471.72	0.349	8.00	0.00
7	4.50	2900.32	586.87	0.202	8.00	0.00
8	4.50	2741.89	713.00	0.260	-7.56	0.00
9	3.09	1882.72	851.34	0.452	-7.56	0.00
10	2.09	1380.65	1000.02	0.724	-8.19	0.00
11	2.12	1685.11	1154.72	0.685	-9.88	0.00
12	1.83	1876.88	1312.85	0.699	-12.75	0.00
13	1.63	2198.78	1477.93	0.672	-16.75	0.00
14	1.41	2789.17	139.15	0.050	-24.50	0.00
15	1.60	2233.99	-1353.43	0.606	-17.31	0.00
16	1.84	1917.59	-1488.02	0.776	-12.94	0.00
17	2.09	1748.38	-1613.30	0.923	-10.38	0.00
18	2.56	1961.61	-1636.12	0.834	-9.50	0.00
19	3.60	2754.52	-1567.09	0.569	-9.50	0.00
20	4.50	3444.13	-1501.79	0.436	-9.50	0.00

STRESS AND STRAIN MEASURES FOR CONCRETE-GROUP 1, LOAD STEP 15

NODE	MAXIMUM COMPRESSION psi	AVERAGE SHEAR psi	RADIAL TENSION psi	INNER-WALL STRAIN in/in	OUTER-WALL STRAIN in/in
1	-3511.96	-0.35	8.29	0.1912E-02	-0.7926E-03
2	-3479.08	11.14	8.08	0.1865E-02	-0.7793E-03
3	-3368.54	22.73	7.43	0.1722E-02	-0.7347E-03
4	-3110.08	34.68	6.43	0.1495E-02	-0.6572E-03
5	-2606.10	47.27	5.02	0.1177E-02	-0.5507E-03
6	-1867.80	60.87	2.96	0.7108E-03	-0.3947E-03
7	-502.40	75.73	0.00	0.1286E-04	-0.1062E-03
8	-1667.10	91.26	0.00	-0.3523E-03	0.8062E-03
9	-2300.40	108.96	0.00	-0.4861E-03	0.9833E-03
10	-3405.06	118.51	0.00	-0.7494E-03	0.1699E-02
11	-3264.80	114.05	0.00	-0.6928E-03	0.1447E-02

12	-3018.13	100.99	0.00	-0.6378E-03	0.1431E-02
13	-2586.68	86.94	0.00	-0.5466E-03	0.1332E-02
14	-1872.33	5.62	0.00	-0.3957E-03	0.1077E-02
15	-2769.78	-77.06	0.00	-0.5853E-03	0.1421E-02
16	-3483.31	-112.83	0.00	-0.7810E-03	0.1766E-02
17	-3771.37	-151.84	0.00	-0.8974E-03	0.1917E-02
18	-3466.15	-167.81	0.00	-0.7741E-03	0.1554E-02
19	-2393.47	-160.73	0.00	-0.5058E-03	0.9907E-03
20	-256.26	-154.03	0.00	-0.5415E-04	-0.5415E-04

STEEL STRESS AND CRACK WIDTHS FOR CONCRETE-GROUP 1, LOAD STEP 15
NOTE: CRACK WIDTH IS REDUCED TO SERVICE-LOAD LEVEL.
ALL OTHER RESPONSES ARE AT FACTORED LOAD LEVEL.

NODE	INNER CAGE psi	OUTER CAGE psi	MAX STRESS TO YIELD ratio	CRACK WIDTH inches
1	43685.85	-3714.11	0.7281	0.00439
2	42583.51	-3767.51	0.7097	0.00394
3	39207.11	-3844.05	0.6535	0.00255
4	33918.39	-3799.51	0.5653	0.00034
5	26502.02	-3783.82	0.4417	0.00000
6	15607.11	-3770.31	0.2601	0.00000
7	-348.83	-2435.01	0.0406	0.00000
8	-3889.09	16520.31	0.2753	0.00000
9	-6184.73	19702.00	0.3284	0.00000
10	-9283.84	35886.08	0.5981	0.00131
11	-11058.85	32324.80	0.5387	0.00332
12	-11676.63	34807.31	0.5801	0.00260
13	-11199.91	34668.31	0.5778	0.00000
14	-9133.50	29963.14	0.4994	0.00000
15	-12197.57	37223.87	0.6204	0.00072
16	-14375.11	43133.84	0.7189	0.00613
17	-14667.12	43676.79	0.7279	0.00800
18	-12304.74	34063.73	0.5677	0.00445
19	-8169.67	21637.45	0.3606	0.00000
20	-1725.69	-1725.69	0.0288	0.00000

ASSESSMENT SUMMARY CONCRETE-GROUP 1, LOAD-STEP 15

LRFD SUMMARY EVALUATION FOR GROUP 1, LOAD STEP 15

DESIGN-CRITERION	CONTROL NODE	FACTORED DEMAND	FACTORED CAPACITY	RATIO VALUE
STEEL YIELDING (psi)	1	43685.9	57000.0	0.766
CONCRETE CRUSHING (psi)	17	3771.4	4875.0	0.774
SHEAR FAILURE (lbs/in)	17	1613.3	1573.5	1.025
RADIAL-TENSION FAIL (psi)	1	8.3	69.6	0.119

LRFD SERVICE-LOAD PERFORMANCE MEASURES FOR GROUP 1, LOAD STEP 15

28x8under8c1MOD.out

NODE NUMBER FOR MAXIMUM CRACK WIDTH	17
MAXIMUM CRACK WIDTH AT SERVICE LOAD (inches)	0.00800
LRFD RATIO: MAX-CRACK-WIDTH / ALLOWABLE	0.80
SPAN LENGTH FOR AUXILIARY EQUATIONS (inches).....	348.00

* * * * NORMAL EXIT FROM CANDE * * * *

28x8under8c2MOD.out

*** WELCOME TO CANDE-2013(version 3/1/2013) ***

MASTER CONTROL AND PIPE-TYPE DATA FOR PROBLEM # 1

USER TITLE: 28x8_u8.6_c2

* * * BOUNDARY CONDITIONS * * *
(FORCES = LBS; DISPLACEMENTS = INCHES; ROTATIONS = DEGREES)

BOUNDARY NODE	LOAD STEP	X-FORCE OR X-DISPLACEMENT	Y-FORCE OR Y-DISPLACEMENT	X-Y ROTATION BEAM ROTATIONAL BOUNDARY CONDITIONS
291	12	F = 0.0000E+00	F = -0.4600E+02	0.0000E+00 F
291	13	F = 0.0000E+00	F = -0.4600E+02	0.0000E+00 F
291	14	F = 0.0000E+00	F = -0.4600E+02	0.0000E+00 F
291	15	F = 0.0000E+00	F = -0.4600E+02	0.0000E+00 F
293	12	F = 0.0000E+00	F = 0.0000E+00	0.0000E+00 F
293	13	F = 0.0000E+00	F = 0.0000E+00	0.0000E+00 F
293	14	F = 0.0000E+00	F = 0.0000E+00	0.0000E+00 F
293	15	F = 0.0000E+00	F = 0.0000E+00	0.0000E+00 F
287	15	F = 0.0000E+00	F = -0.7000E+01	0.0000E+00 F
288	15	F = 0.0000E+00	F = -0.1400E+02	0.0000E+00 F
289	15	F = 0.0000E+00	F = -0.1400E+02	0.0000E+00 F
290	15	F = 0.0000E+00	F = -0.1400E+02	0.0000E+00 F
291	15	F = 0.0000E+00	F = -0.1400E+02	0.0000E+00 F
292	15	F = 0.0000E+00	F = -0.1400E+02	0.0000E+00 F
293	15	F = 0.0000E+00	F = -0.1400E+02	0.0000E+00 F
294	15	F = 0.0000E+00	F = -0.1400E+02	0.0000E+00 F
295	15	F = 0.0000E+00	F = -0.1400E+02	0.0000E+00 F
296	15	F = 0.0000E+00	F = -0.1400E+02	0.0000E+00 F

CONCRETE, FACTORED-EVALUATION FOR GROUP 1, LOAD-STEP 15

28x8under8c2MOD.out

STRUCTURAL RESPONSES OF CONCRETE-GROUP 1, LOAD-STEP 15
COORDINATES, DISPLACEMENTS AND CRACK DEPTHS ARE INCHES
Y-BAR IS "NEUTRAL AXIS" LOCATION FROM INTERIOR, INCHES
PRESSURES ARE LB/IN**2
MOMENTS ARE IN-LB/IN
THRUST AND SHEAR ARE LB/IN

LOCAL NODE	X-COORD. Y-COORD.	X-DISP. Y-DISP.	N-PRES. S-PRES.	MOMENT THRUST	Y-BAR CRACK DEPTH
1	0.00	0.00000E+00	-0.93840E+01	0.27157E+05	0.73190E+01
	101.00	-0.23639E+01	-0.41975E-01	-0.20564E+04	0.69938E+01
2	13.43	-0.93466E-03	-0.10131E+02	0.26684E+05	0.73190E+01
	100.76	-0.23395E+01	-0.12994E+01	-0.20767E+04	0.69839E+01
3	26.84	0.13623E-02	-0.10879E+02	0.25150E+05	0.73442E+01
	100.08	-0.22672E+01	-0.25569E+01	-0.21070E+04	0.69564E+01
4	40.22	0.97932E-02	-0.11837E+02	0.22433E+05	0.74181E+01
	98.95	-0.21502E+01	-0.35691E+01	-0.21559E+04	0.68986E+01
5	53.56	0.26715E-01	-0.12883E+02	0.18382E+05	0.74181E+01
	97.38	-0.19940E+01	-0.40729E+01	-0.22187E+04	0.67695E+01
6	66.84	0.53569E-01	-0.14056E+02	0.12838E+05	0.74181E+01
	95.38	-0.18071E+01	-0.46280E+01	-0.22926E+04	0.64024E+01
7	80.05	0.90075E-01	-0.15092E+02	0.56235E+04	0.50615E+01
	92.93	-0.16054E+01	-0.50027E+01	-0.23773E+04	0.94828E+00
8	93.16	0.13396E+00	-0.16127E+02	-0.34111E+04	0.20283E+01
	90.05	-0.14011E+01	-0.53408E+01	-0.24716E+04	0.68182E+01
9	106.18	0.18145E+00	-0.17188E+02	-0.14411E+05	0.25648E+01
	86.73	-0.12076E+01	-0.55111E+01	-0.25746E+04	0.66394E+01
10	119.08	0.22702E+00	-0.17865E+02	-0.27521E+05	0.28369E+01
	82.99	-0.10448E+01	-0.51813E+01	-0.26822E+04	0.73667E+01
11	131.84	0.26688E+00	-0.18168E+02	-0.42826E+05	0.34722E+01
	78.82	-0.91783E+00	-0.49063E+01	-0.27920E+04	0.83076E+01
12	144.47	0.30007E+00	-0.18198E+02	-0.60353E+05	0.40506E+01
	74.23	-0.82268E+00	-0.46276E+01	-0.29048E+04	0.10481E+02
13	156.93	0.32731E+00	-0.18797E+02	-0.80103E+05	0.44678E+01
	69.23	-0.75170E+00	-0.43914E+01	-0.30219E+04	0.13556E+02
14	169.22	0.35008E+00	-0.23035E+02	-0.10219E+06	0.55838E+01
	63.82	-0.69730E+00	-0.18105E+02	-0.32950E+04	0.19575E+02
15	171.39	0.38208E+00	-0.10227E+02	-0.89702E+05	0.45538E+01
	54.75	-0.68879E+00	-0.43966E+01	-0.34871E+04	0.13943E+02
16	172.91	0.40586E+00	-0.10639E+02	-0.75840E+05	0.42445E+01
	45.55	-0.68392E+00	-0.44466E+01	-0.34382E+04	0.10642E+02
17	173.78	0.41573E+00	-0.11997E+02	-0.60662E+05	0.36636E+01

	36.26	-0.68191E+00	-0.47974E+01	-0.33787E+04	0.87240E+01
18	174.00	0.40760E+00	-0.13385E+02	-0.44311E+05	0.34579E+01
	26.94	-0.68093E+00	-0.45245E+01	-0.33586E+04	0.79594E+01
19	174.00	0.36549E+00	-0.49560E+01	-0.21706E+05	0.30043E+01
	13.47	-0.67915E+00	-0.23084E+01	-0.33930E+04	0.78747E+01
20	174.00	0.30663E+00	0.34735E+01	-0.59845E-09	0.60775E+01
	0.00	-0.67808E+00	-0.92321E-01	-0.34381E+04	0.00000E+00

SHEAR FORCE DIAGNOSTCS FOR CONCRETE-GROUP 1, LOAD STEP 15
-- V-factor is coefficient of sqrt(PFPC) equal to capacity.
-- Shear depth "d" is negative if measured from outer wall.
-- Stirrup load is excess shear force above capacity.

NODE	EQUIVALENT V-factor	SHEAR CAPACITY lbs/inch	APPLIED SHEAR lbs/inch	APPLIED/ CAPACITY ratio	SHEAR DEPTH-d inches	STIRRUP LOAD lbs/inch
1	1.84	1185.61	-4.31	0.004	8.00	0.00
2	1.84	1186.70	74.72	0.063	8.00	0.00
3	1.84	1188.33	158.28	0.133	8.00	0.00
4	1.85	1190.96	251.96	0.212	8.00	0.00
5	1.85	1194.33	357.22	0.299	8.00	0.00
6	1.97	1269.70	475.00	0.374	8.00	0.00
7	4.46	2879.80	604.94	0.210	8.00	0.00
8	4.50	2741.89	745.88	0.272	-7.56	0.00
9	3.23	1967.15	897.59	0.456	-7.56	0.00
10	2.15	1419.45	1057.90	0.745	-8.19	0.00
11	2.12	1691.24	1222.36	0.723	-9.88	0.00
12	1.83	1883.14	1387.82	0.737	-12.75	0.00
13	1.64	2216.91	1557.58	0.703	-16.75	0.00
14	1.42	2796.04	152.84	0.055	-24.50	0.00
15	1.61	2241.91	-1412.64	0.630	-17.31	0.00
16	1.85	1925.91	-1556.96	0.808	-12.94	0.00
17	2.10	1757.08	-1690.38	0.962	-10.38	0.00
18	2.57	1969.76	-1715.69	0.871	-9.50	0.00
19	3.61	2765.74	-1644.79	0.595	-9.50	0.00
20	4.50	3444.13	-1578.03	0.458	-9.50	0.00

STRESS AND STRAIN MEASURES FOR CONCRETE-GROUP 1, LOAD STEP 15

NODE	MAXIMUM COMPRESSION psi	AVERAGE SHEAR psi	RADIAL TENSION psi	INNER-WALL STRAIN in/in	OUTER-WALL STRAIN in/in
1	-3551.65	-0.56	8.28	0.1915E-02	-0.8087E-03
2	-3521.57	9.64	8.12	0.1878E-02	-0.7965E-03
3	-3419.25	20.42	7.59	0.1759E-02	-0.7552E-03
4	-3228.21	32.51	6.67	0.1550E-02	-0.6822E-03
5	-2745.82	46.09	5.32	0.1247E-02	-0.5802E-03
6	-2012.46	61.29	3.29	0.7846E-03	-0.4253E-03
7	-565.78	78.06	0.00	0.2357E-04	-0.1196E-03
8	-1545.55	95.47	0.00	-0.3266E-03	0.6863E-03
9	-2314.15	114.88	0.00	-0.4890E-03	0.9778E-03
10	-3458.69	125.37	0.00	-0.7711E-03	0.1743E-02

11	-3333.40	120.73	0.00	-0.7205E-03	0.1502E-02
12	-3146.90	106.76	0.00	-0.6650E-03	0.1493E-02
13	-2705.20	91.62	0.00	-0.5717E-03	0.1395E-02
14	-1960.52	6.18	0.00	-0.4143E-03	0.1129E-02
15	-2902.40	-80.43	0.00	-0.6133E-03	0.1490E-02
16	-3583.44	-118.06	0.00	-0.8215E-03	0.1855E-02
17	-3886.03	-159.09	0.00	-0.9438E-03	0.2014E-02
18	-3566.09	-175.97	0.00	-0.8145E-03	0.1634E-02
19	-2509.77	-168.70	0.00	-0.5304E-03	0.1041E-02
20	-267.31	-161.85	0.00	-0.5649E-04	-0.5649E-04

STEEL STRESS AND CRACK WIDTHS FOR CONCRETE-GROUP 1, LOAD STEP 15
NOTE: CRACK WIDTH IS REDUCED TO SERVICE-LOAD LEVEL.
ALL OTHER RESPONSES ARE AT FACTORED LOAD LEVEL.

NODE	INNER CAGE psi	OUTER CAGE psi	MAX STRESS TO YIELD ratio	CRACK WIDTH inches
1	43656.97	-4074.54	0.7276	0.00438
2	42789.70	-4079.21	0.7132	0.00401
3	40028.56	-4036.28	0.6671	0.00282
4	35159.34	-3958.66	0.5860	0.00075
5	28089.54	-3934.58	0.4682	0.00000
6	17292.53	-3913.34	0.2882	0.00000
7	-161.04	-2669.76	0.0445	0.00000
8	-3992.81	13851.45	0.2309	0.00000
9	-6293.87	19546.85	0.3258	0.00000
10	-9583.90	36793.99	0.6132	0.00160
11	-11513.59	33557.64	0.5593	0.00372
12	-12170.77	36318.41	0.6053	0.00309
13	-11706.25	36313.94	0.6052	0.00049
14	-9560.53	31412.72	0.5235	0.00000
15	-12777.91	39038.02	0.6506	0.00131
16	-15129.15	45307.68	0.7551	0.00683
17	-15431.79	45892.39	0.7649	0.00873
18	-12951.05	35819.69	0.5970	0.00502
19	-8552.91	22753.99	0.3792	0.00000
20	-1800.12	-1800.12	0.0300	0.00000

ASSESSMENT SUMMARY CONCRETE-GROUP 1, LOAD-STEP 15

LRFD SUMMARY EVALUATION FOR GROUP 1, LOAD STEP 15

DESIGN-CRITERION	CONTROL NODE	FACTORED DEMAND	FACTORED CAPACITY	RATIO VALUE
STEEL YIELDING (psi)	17	45892.4	57000.0	0.805
CONCRETE CRUSHING (psi)	17	3886.0	4875.0	0.797
SHEAR FAILURE (lbs/in)	17	1690.4	1581.4	1.069
RADIAL-TENSION FAIL (psi)	1	8.3	69.6	0.119

28x8under8c2MOD.out

LRFD SERVICE-LOAD PERFORMANCE MEASURES FOR GROUP 1, LOAD STEP 15

NODE NUMBER FOR MAXIMUM CRACK WIDTH	17
MAXIMUM CRACK WIDTH AT SERVICE LOAD (inches)	0.00873
LRFD RATIO: MAX-CRACK-WIDTH / ALLOWABLE	0.87
SPAN LENGTH FOR AUXILIARY EQUATIONS (inches).....	348.00

* * * * NORMAL EXIT FROM CANDE * * * *

28x8under8c3MOD.out

*** WELCOME TO CANDE-2013(version 3/1/2013) ***

MASTER CONTROL AND PIPE-TYPE DATA FOR PROBLEM # 1

USER TITLE: 28x8_u8.6_c3

* * * BOUNDARY CONDITIONS * * *
(FORCES = LBS; DISPLACEMENTS = INCHES; ROTATIONS = DEGREES)

BOUNDARY NODE	LOAD STEP	X-FORCE OR X-DISPLACEMENT	Y-FORCE OR Y-DISPLACEMENT	X-Y ROTATION BEAM ROTATIONAL BOUNDARY CONDITIONS
288	12	F = 0.0000E+00	F = -0.3560E+02	0.0000E+00 F
288	13	F = 0.0000E+00	F = -0.3560E+02	0.0000E+00 F
288	14	F = 0.0000E+00	F = -0.3560E+02	0.0000E+00 F
288	15	F = 0.0000E+00	F = -0.3560E+02	0.0000E+00 F
293	12	F = 0.0000E+00	F = 0.0000E+00	0.0000E+00 F
293	13	F = 0.0000E+00	F = 0.0000E+00	0.0000E+00 F
293	14	F = 0.0000E+00	F = 0.0000E+00	0.0000E+00 F
293	15	F = 0.0000E+00	F = 0.0000E+00	0.0000E+00 F
287	15	F = 0.0000E+00	F = -0.7000E+01	0.0000E+00 F
288	15	F = 0.0000E+00	F = -0.1400E+02	0.0000E+00 F
289	15	F = 0.0000E+00	F = -0.1400E+02	0.0000E+00 F
290	15	F = 0.0000E+00	F = -0.1400E+02	0.0000E+00 F
291	15	F = 0.0000E+00	F = -0.1400E+02	0.0000E+00 F
292	15	F = 0.0000E+00	F = -0.1400E+02	0.0000E+00 F
293	15	F = 0.0000E+00	F = -0.1400E+02	0.0000E+00 F
294	15	F = 0.0000E+00	F = -0.1400E+02	0.0000E+00 F
295	15	F = 0.0000E+00	F = -0.1400E+02	0.0000E+00 F
296	15	F = 0.0000E+00	F = -0.1400E+02	0.0000E+00 F

CONCRETE, FACTORED-EVALUATION FOR GROUP 1, LOAD-STEP 15

28x8under8c3MOD.out

STRUCTURAL RESPONSES OF CONCRETE-GROUP 1, LOAD-STEP 15
COORDINATES, DISPLACEMENTS AND CRACK DEPTHS ARE INCHES
Y-BAR IS "NEUTRAL AXIS" LOCATION FROM INTERIOR, INCHES
PRESSURES ARE LB/IN**2
MOMENTS ARE IN-LB/IN
THRUST AND SHEAR ARE LB/IN

LOCAL NODE	X-COORD. Y-COORD.	X-DISP. Y-DISP.	N-PRES. S-PRES.	MOMENT THRUST	Y-BAR CRACK DEPTH
1	0.00	0.00000E+00	-0.12020E+02	0.30331E+05	0.74705E+01
	101.00	-0.25187E+01	-0.26215E+00	-0.21194E+04	0.70404E+01
2	13.43	-0.98604E-03	-0.12128E+02	0.29673E+05	0.74705E+01
	100.76	-0.24913E+01	-0.18681E+01	-0.21482E+04	0.70233E+01
3	26.84	0.16738E-02	-0.12237E+02	0.27624E+05	0.73190E+01
	100.08	-0.24104E+01	-0.34740E+01	-0.21897E+04	0.69751E+01
4	40.22	0.11151E-01	-0.12633E+02	0.24184E+05	0.73598E+01
	98.95	-0.22803E+01	-0.47926E+01	-0.22547E+04	0.69103E+01
5	53.56	0.29921E-01	-0.13188E+02	0.19311E+05	0.74181E+01
	97.38	-0.21077E+01	-0.52030E+01	-0.23352E+04	0.67709E+01
6	66.84	0.59409E-01	-0.14078E+02	0.12941E+05	0.74181E+01
	95.38	-0.19026E+01	-0.55699E+01	-0.24251E+04	0.63789E+01
7	80.05	0.99275E-01	-0.15063E+02	0.49559E+04	0.50615E+01
	92.93	-0.16824E+01	-0.57623E+01	-0.25231E+04	0.10690E+00
8	93.16	0.14700E+00	-0.16216E+02	-0.47793E+04	0.15738E+01
	90.05	-0.14603E+01	-0.58327E+01	-0.26275E+04	0.70920E+01
9	106.18	0.19819E+00	-0.17415E+02	-0.16427E+05	0.25648E+01
	86.73	-0.12518E+01	-0.55535E+01	-0.27357E+04	0.67014E+01
10	119.08	0.24674E+00	-0.18272E+02	-0.30153E+05	0.28493E+01
	82.99	-0.10784E+01	-0.51438E+01	-0.28449E+04	0.73800E+01
11	131.84	0.28883E+00	-0.18725E+02	-0.46077E+05	0.35466E+01
	78.82	-0.94426E+00	-0.47596E+01	-0.29550E+04	0.83134E+01
12	144.47	0.32361E+00	-0.18922E+02	-0.64250E+05	0.40945E+01
	74.23	-0.84450E+00	-0.44532E+01	-0.30673E+04	0.10486E+02
13	156.93	0.35198E+00	-0.19655E+02	-0.84705E+05	0.44678E+01
	69.23	-0.77050E+00	-0.41473E+01	-0.31833E+04	0.13567E+02
14	169.22	0.37556E+00	-0.23882E+02	-0.10758E+06	0.55838E+01
	63.82	-0.71406E+00	-0.17705E+02	-0.34479E+04	0.19604E+02
15	171.39	0.40861E+00	-0.11186E+02	-0.94327E+05	0.45538E+01
	54.75	-0.70524E+00	-0.46410E+01	-0.36304E+04	0.13962E+02
16	172.91	0.43298E+00	-0.11559E+02	-0.79691E+05	0.42445E+01
	45.55	-0.70023E+00	-0.46397E+01	-0.35776E+04	0.10645E+02
17	173.78	0.44272E+00	-0.12711E+02	-0.63726E+05	0.36636E+01
	36.26	-0.69819E+00	-0.49276E+01	-0.35137E+04	0.87272E+01

18	174.00	0.43350E+00	-0.13892E+02	-0.46562E+05	0.34579E+01
	26.94	-0.69718E+00	-0.45522E+01	-0.34903E+04	0.79643E+01
19	174.00	0.38823E+00	-0.50878E+01	-0.22819E+05	0.30043E+01
	13.47	-0.69533E+00	-0.23177E+01	-0.35239E+04	0.78911E+01
20	174.00	0.32534E+00	0.37161E+01	0.18167E-09	0.60775E+01
	0.00	-0.69422E+00	-0.83230E-01	-0.35692E+04	0.00000E+00

SHEAR FORCE DIAGNOSTCS FOR CONCRETE-GROUP 1, LOAD STEP 15
-- V-factor is coefficient of sqrt(PFPC) equal to capacity.
-- Shear depth "d" is negative if measured from outer wall.
-- Stirrup load is excess shear force above capacity.

NODE	EQUIVALENT V-factor	SHEAR CAPACITY lbs/inch	APPLIED SHEAR lbs/inch	APPLIED/ CAPACITY ratio	SHEAR DEPTH-d inches	STIRRUP LOAD lbs/inch
1	1.84	1189.00	-2.70	0.002	8.00	0.00
2	1.85	1190.55	100.79	0.085	8.00	0.00
3	1.85	1192.78	204.34	0.171	8.00	0.00
4	1.85	1196.27	309.49	0.259	8.00	0.00
5	1.86	1200.60	418.57	0.349	8.00	0.00
6	2.16	1393.71	534.43	0.383	8.00	0.00
7	4.50	2900.32	659.71	0.227	8.00	0.00
8	4.50	2741.89	796.07	0.290	-7.56	0.00
9	3.05	1860.44	944.66	0.508	-7.56	0.00
10	2.08	1373.76	1103.88	0.804	-8.19	0.00
11	2.14	1701.25	1269.43	0.746	-9.88	0.00
12	1.84	1892.29	1438.11	0.760	-12.75	0.00
13	1.62	2190.88	1613.14	0.736	-16.75	0.00
14	1.42	2803.50	141.21	0.050	-24.50	0.00
15	1.61	2249.36	-1495.13	0.665	-17.31	0.00
16	1.85	1933.74	-1640.65	0.848	-12.94	0.00
17	2.11	1765.22	-1776.12	1.006	-10.38	10.90
18	2.58	1976.56	-1801.49	0.911	-9.50	0.00
19	3.62	2773.96	-1728.35	0.623	-9.50	0.00
20	4.50	3625.40	-1659.81	0.458	10.00	0.00

STRESS AND STRAIN MEASURES FOR CONCRETE-GROUP 1, LOAD STEP 15

NODE	MAXIMUM COMPRESSION psi	AVERAGE SHEAR psi	RADIAL TENSION psi	INNER-WALL STRAIN in/in	OUTER-WALL STRAIN in/in
1	-3769.70	-0.35	9.39	0.2167E-02	-0.8968E-03
2	-3730.76	13.01	9.15	0.2112E-02	-0.8810E-03
3	-3601.84	26.37	8.40	0.1945E-02	-0.8289E-03
4	-3371.85	39.93	7.23	0.1678E-02	-0.7360E-03
5	-2885.80	54.01	5.59	0.1310E-02	-0.6098E-03
6	-2074.20	68.96	3.34	0.7997E-03	-0.4383E-03
7	-537.19	85.12	0.00	0.1133E-04	-0.1135E-03
8	-1959.85	101.89	0.00	-0.4141E-03	0.1022E-02
9	-2595.72	120.91	0.00	-0.5485E-03	0.1123E-02
10	-3644.46	130.82	0.00	-0.8462E-03	0.1920E-02
11	-3474.39	125.38	0.00	-0.7774E-03	0.1622E-02
12	-3304.48	110.62	0.00	-0.7088E-03	0.1592E-02

13	-2858.99	94.89	0.00	-0.6042E-03	0.1476E-02
14	-2064.41	5.71	0.00	-0.4362E-03	0.1193E-02
15	-3046.96	-85.13	0.00	-0.6439E-03	0.1570E-02
16	-3690.83	-124.41	0.00	-0.8649E-03	0.1953E-02
17	-4007.53	-167.16	0.00	-0.9929E-03	0.2120E-02
18	-3671.53	-184.77	0.00	-0.8571E-03	0.1721E-02
19	-2630.66	-177.27	0.00	-0.5559E-03	0.1097E-02
20	-277.50	-170.24	0.00	-0.5864E-04	-0.5864E-04

STEEL STRESS AND CRACK WIDTHS FOR CONCRETE-GROUP 1, LOAD STEP 15
NOTE: CRACK WIDTH IS REDUCED TO SERVICE-LOAD LEVEL.
ALL OTHER RESPONSES ARE AT FACTORED LOAD LEVEL.

NODE	INNER CAGE psi	OUTER CAGE psi	MAX STRESS TO YIELD ratio	CRACK WIDTH inches
1	49531.97	-4168.91	0.8255	0.00541
2	48237.89	-4228.61	0.8040	0.00492
3	44291.80	-4320.40	0.7382	0.00341
4	38100.80	-4219.03	0.6350	0.00101
5	29502.10	-4141.25	0.4917	0.00000
6	17595.20	-4104.62	0.2933	0.00000
7	-434.54	-2622.86	0.0437	0.00000
8	-4099.04	21210.11	0.3535	0.00000
9	-6890.53	22564.64	0.3761	0.00000
10	-10469.51	40569.65	0.6762	0.00217
11	-12418.94	36235.78	0.6039	0.00398
12	-12970.63	38722.04	0.6454	0.00321
13	-12365.48	38431.19	0.6405	0.00052
14	-10056.50	33207.91	0.5535	0.00000
15	-13396.80	41134.05	0.6856	0.00127
16	-15928.26	47701.01	0.7950	0.00678
17	-16230.48	48300.63	0.8050	0.00867
18	-13620.02	37733.61	0.6289	0.00497
19	-8937.46	23980.25	0.3997	0.00000
20	-1868.73	-1868.73	0.0311	0.00000

ASSESSMENT SUMMARY CONCRETE-GROUP 1, LOAD-STEP 15

LRFD SUMMARY EVALUATION FOR GROUP 1, LOAD STEP 15

DESIGN-CRITERION	CONTROL NODE	FACTORED DEMAND	FACTORED CAPACITY	RATIO VALUE
STEEL YIELDING (psi)	1	49532.0	57000.0	0.869
CONCRETE CRUSHING (psi)	17	4007.5	4875.0	0.822
SHEAR FAILURE (lbs/in)	17	1776.1	1588.7	1.118
RADIAL-TENSION FAIL (psi)	1	9.4	69.6	0.135

LRFD SERVICE-LOAD PERFORMANCE MEASURES FOR GROUP 1, LOAD STEP 15

28x8under8c3MOD.out

NODE NUMBER FOR MAXIMUM CRACK WIDTH	17
MAXIMUM CRACK WIDTH AT SERVICE LOAD (inches)	0.00867
LRFD RATIO: MAX-CRACK-WIDTH / ALLOWABLE	0.87
SPAN LENGTH FOR AUXILIARY EQUATIONS (inches).....	348.00

* * * * NORMAL EXIT FROM CANDE * * * *

DELTA
ENGINEERS, ARCHITECTS, & LAND SURVEYORS
860 Hooper Road, Endwell, NY 13760
www.deltaengineers.com
Phone: (607) 231-6600
Fax: (607) 231-6650

JOB 2016.059.009

DESCIPTION 28x8 under 8

SHEET NO. ____ OF ____ SCALE ____

CALCULATED BY rja DATE 7/5/2016

CHECKED BY ____ DATE ____

FOOTING DESIGN

DELTA
ENGINEERS, ARCHITECTS, & LAND SURVEYORS
860 Hooper Road, Endwell, NY 13760
www.deltaengineers.com
Phone: (607) 231-6600
Fax: (607) 231-6650

JOB 2016.059.009
DESCIPTION 28x8 single arch under 8
SHEET NO. ____ OF ____ SCALE ____
CALCULATED BY RJA DATE 7/5/2016
CHECKED BY ____ DATE ____

Arch Reactions from Cande (Service Level)

	H (k/ft)	V (k/ft)
DC	-1.50	-3.18
EH	0.12	-0.35
EV	-10.72	-24.03

Live Load Reactions: Impact Factor = 1.0000

Case 1: HL-93 Truck at Center

LL w/ Impact	-1.62	-2.54
LL w/o Impact	-1.62	-2.54

Case 2: HL-93 Truck at Quarter Point

	H (k/ft)	V (k/ft)
LL w/ Impact	-2.14	-3.52
LL w/o Impact	-2.14	-3.52

Case 3: HL-93 Tandem at Center

	H (k/ft)	V (k/ft)
LL w/ Impact	-2.07	-3.17
LL w/o Impact	-2.07	-3.17

Case 4: HL-93 Tandem at Quarter Point

	H (k/ft)	V (k/ft)
LL w/ Impact	-2.71	-4.55
LL w/o Impact	-2.71	-4.55

controling

	H (k/ft)	V (k/ft)
DL Only	-12.11	-27.56
LL Only	-2.71	-4.55

DELTA
ENGINEERS, ARCHITECTS, & LAND SURVEYORS
860 Hooper Road, Endwell, NY 13760
www.deltaengineers.com
Phone: (607) 231-6600
Fax: (607) 231-6650

JOB	2016.059.009		
DESCIPTION	28x8u8		
SHEET NO.	___ OF ___	SCALE	
CALCULATED BY	rja	DATE	7/5/2016
CHECKED BY		DATE	

Structure Geometry

Toe Width	1 ft	Stem Height	3.51 ft	Backfill Soil (phi)	32 deg
Wall Width	12 in	Footing Thickness	2.5 ft	Soil Weight	140 pcf
Stem Width	2.25 ft	Fill Height	8.6 ft	Ka =	0.3073
Heel Width	5 ft	Structure Height	8.83 ft	LL Surcharge	2 ft
Footing Width	8.25 ft			Factored Brg Res.	15.5ksf

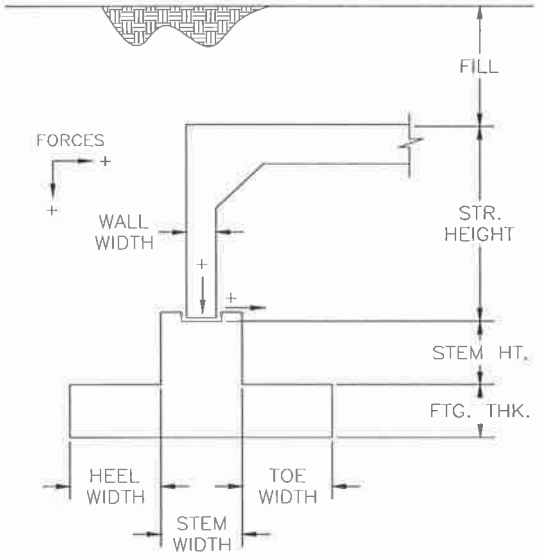

Pedestal Footing

(Note: A Stem Ht. of Zero indicates a strip footing, not a pedestal footing as shown)

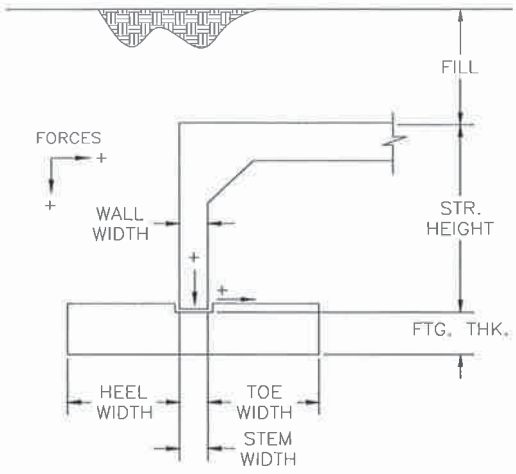

Strip Footing

(Note: Ensure Stem Width equals Wall Width and Stem Ht. equals Zero when designing a strip footing)

DELTA
ENGINEERS, ARCHITECTS, & LAND SURVEYORS
860 Hooper Road, Endwell, NY 13760
www.deltaengineers.com
Phone: (607) 231-6600
Fax: (607) 231-6650

JOB 2016.059.009
DESCIPTION 28x8u8
SHEET NO. ____ OF ____ SCALE ____
CALCULATED BY rja DATE 7/5/2016
CHECKED BY ____ DATE ____

Final Condition with Live Load Effects - Sum Forces and Moments About "Heel"

Toe Width	1	ft	Backfill Soil (phi)	32	deg	Soil Weight	140	pcf					
Wall Width	12	in	Limit States				Ka =	2	<<< ENGAGING				
Stem Width	2.25	ft	Factor	Str-1a	Str-1b	Str IV	Serv	Resistance Factors		PASSIVE			
Heel Width	5	ft	DC	1.25	0.90	1.50	1.00	Sliding	0.9	PRESSURE			
Footing Width	8.25	ft	DW	1.50	0.65	1.50	1.00	Bearing	0.45	AGAINST			
Stem Height	3.51	ft	EH	0.90	0.90	0.90	1.00	Moment	0.9	STEM AND			
Footing Thickness	2.5	ft	EV	1.35	1.00	1.35	1.00	Shear	0.9	FOOTING			
Fill Height	8.6	ft	LL	1.75	1.75	0.00	1.00						
Structure Height	8.83	ft	LS	0.00	0.00	0.00	1.00	Factored Bearing Resistance		15.5ksf			

Suggest investigating LS or providing reason not to

Note: Downward and inward forces are positive

		Dir	Factor	Force		Arm ft		Str-1a F kips	Str-1a M k-ft	Str-1b F kips	Str-1b M k-ft	Str IV F kips	Str IV M k-ft	Service F kips	Service M k-ft
Structure Reaction		V	DC	3.18	x	6.13	=	3.98	24.35	2.86	17.53	4.77	29.22	3.18	19.48
		V	DW	0	x	6.13	=	0.00	0.00	0.00	0.00	0.00	0.00	0.00	0.00
		V	EH	0.35	x	6.13	=	0.32	1.93	0.32	1.93	0.32	1.93	0.35	2.14
		V	EV	24.03	x	6.13	=	32.44	198.70	24.03	147.2	32.44	198.70	24.03	147.18
		V	LL	4.55	x	6.13	=	7.96	48.77	7.96	48.77	0.00	0.00	4.55	27.87
		H	DC	-1.5	x	6.01	=	-1.88	-11.27	-1.35	-8.11	-2.25	-13.52	-1.50	-9.02
		H	DW	0	x	6.01	=	0.00	0.00	0.00	0.00	0.00	0.00	0.00	0.00
		H	EH	0.12	x	6.01	=	0.11	0.65	0.11	0.65	0.11	0.65	0.12	0.72
		H	EV	-10.7	x	6.01	=	-14.47	-86.98	-10.72	-64.43	-14.47	-86.98	-10.72	-64.43
		H	LL	-2.71	x	6.01	=	-4.74	-28.50	-4.74	-28.50	0.00	0.00	-2.71	-16.29
		H	LS	0	x	6.01	=	0.00	0.00	0.00	0.00	0.00	0.00	0.00	0.00
Soil Above Heel		V	EV	14.66	x	2.50	=	19.79	49.47	14.66	36.65	19.79	49.47	14.66	36.65
Soil Above Stem		V	EV	1.53	x	5.31	=	2.06	10.94	1.53	8.10	2.06	10.94	1.53	8.10
EH from Soil Above		H	EH	29.33	x	3.01	=	26.40	79.33	26.40	79.33	26.40	79.33	29.33	88.14
EH on Stem FTG		H	EH	5.057	x	2.00	=	4.55	9.12	4.55	9.12	4.55	9.12	5.06	10.13
Stem Weight		V	DC	1.185	x	6.13	=	1.48	9.07	1.07	6.53	1.78	10.88	1.18	7.26
Ftg Weight		V	DC	3.094	x	4.13	=	3.87	15.95	2.78	11.49	4.64	19.14	3.09	12.76
Totals									321.52		266.23		308.87		270.70
Total Vertical								71.89		55.20		65.79		52.57	
Net Horizontal								9.97		14.24		14.34		19.58	
Resultant Loacation								4.47 ft		4.82 ft		4.69 ft		5.15 ft	
Eccentricity								-0.35 ft		-0.70 ft		-0.57 ft		-1.02 ft	
bf'								7.55 ft		6.85 ft		7.11 ft		6.20 ft	
Bearing Pressure								9.52 ksf		8.05 ksf		9.25 ksf		8.48 ksf	
Eccentricity within middle half								YES		YES		YES		YES	
Sliding Resistance								32.34 kips		24.84 kips		29.60 kips		23.65	

revise for footing on bedrock (typ)

DELTA
ENGINEERS, ARCHITECTS, & LAND SURVEYORS
860 Hooper Road, Endwell, NY 13760
www.deltaengineers.com
Phone: (607) 231-6600
Fax: (607) 231-6650

JOB 2016.059.009
DESCIPTION 28x8u8
SHEET NO. ____ OF ____ SCALE ____
CALCULATED BY rja DATE 7/5/2016
CHECKED BY ____ DATE ____

Final Condition without Live Load Effects - Sum Forces and Moments About "Heel"

Toe Width	1	ft	Backfill Soil (phi)	32	deg	Soil Weight	140	pcf							
Wall Width	12	in	Limit States						Ka =	0.307					
Stem Width	2.25	ft	Factor	Str-1a	Str-1b	Str IV	Serv		Resistance Factors						
Heel Width	5	ft	DC	1.25	0.90	1.50	1.00		Sliding	0.9					
Footing Width	8.25	ft	DW	1.50	0.65	1.50	1.00		Bearing	0.45					
Stem Height	3.51	ft	EH	0.90	0.90	0.90	1.00		Moment	0.9					
Footing Thickness	2.5	ft	EV	1.35	1.00	1.35	1.00		Shear	0.9					
Fill Height	8.6	ft	LL	1.75	1.75	0.00	1.00								
Structure Height	8.83	ft	LS	0.00	0.00	0.00	1.00		Factored Bearing Resistance	15.5ksf					

Note: Downward and inward forces are positive

								Str-1a		Str-1b		Str IV		Service	
	Dir	Factor	Force		Arm ft			F kips	M k-ft	F kips	M k-ft	F kips	M k-ft	F kips	M k-ft
Structure Reaction	V	DC	3.18	x	6.13	=		3.98	24.35	2.86	17.53	4.77	29.22	3.18	19.48
	V	DW	0	x	6.13	=		0.00	0.00	0.00	0.00	0.00	0.00	0.00	0.00
	V	EH	0.35	x	6.13	=		0.32	1.93	0.32	1.93	0.32	1.93	0.35	2.14
	V	EV	24.03	x	6.13	=		32.44	198.70	24.03	147.2	32.44	198.70	24.03	147.18
	V	LL	0	x	6.13	=		0.00	0.00	0.00	0.00	0.00	0.00	0.00	0.00
	H	DC	-1.5	x	6.01	=		-1.88	-11.27	-1.35	-8.11	-2.25	-13.52	-1.50	-9.02
	H	DW	0	x	6.01	=		0.00	0.00	0.00	0.00	0.00	0.00	0.00	0.00
	H	EH	0.12	x	6.01	=		0.11	0.65	0.11	0.65	0.11	0.65	0.12	0.72
	H	EV	-10.7	x	6.01	=		-14.47	-86.98	-10.72	-64.43	-14.47	-86.98	-10.72	-64.43
	H	LL	0	x	6.01	=		0.00	0.00	0.00	0.00	0.00	0.00	0.00	0.00
	H	LS	0	x	6.01	=		0.00	0.00	0.00	0.00	0.00	0.00	0.00	0.00
Soil Above Heel	V	EV	14.66	x	2.50	=		19.79	49.47	14.66	36.65	19.79	49.47	14.66	36.65
Soil Above Stem	V	EV	1.53	x	5.31	=		2.06	10.94	1.53	8.10	2.06	10.94	1.53	8.10
EH from Soil Above	H	EH	4.506	x	3.01	=		4.06	12.19	4.06	12.19	4.06	12.19	4.51	13.54
EH on Stem FTG	H	EH	0.777	x	2.00	=		0.70	1.40	0.70	1.40	0.70	1.40	0.78	1.56
Stem Weight	V	DC	1.185	x	6.13	=		1.48	9.07	1.07	6.53	1.78	10.88	1.18	7.26
Ftg Weight	V	DC	3.094	x	4.13	=		3.87	15.95	2.78	11.49	4.64	19.14	3.09	12.76
Totals									226.40		171.10		234.02		175.95
Total Vertical								63.93		47.24		65.79		48.02	
Net Horizontal								-11.48		-7.21		-11.86		-6.82	
Resultant Loacation								3.54	ft	3.62	ft	3.56	ft	3.66	ft
Eccentricity								0.58	ft	0.50	ft	0.57	ft	0.46	ft
bf'								7.08	ft	7.24	ft	7.11	ft	7.33	ft
Bearing Pressure								9.03	ksf	6.52	ksf	9.25	ksf	6.55	ksf
Eccentricity within middle half								YES		YES		YES		YES	
Sliding Resistance								28.76	kips	21.25	kips	29.60	kips	21.61	

DELTA
ENGINEERS, ARCHITECTS, & LAND SURVEYORS
860 Hooper Road, Endwell, NY 13760
www.deltaengineers.com
Phone: (607) 231-6600
Fax: (607) 231-6650

JOB 2016.059.009
DESCIPTION 28x8u8
SHEET NO. ____ OF ____ SCALE ____
CALCULATED BY rja DATE 7/5/2016
CHECKED BY ____ DATE ____

Stem and Footing Design Forces - Stablilty about Heel

Footing Width	8.25 ft
Toe width	1 ft
Heel Width	5 ft
Footing Thickness	2.5 ft
Overburden Ht over Heel	20.94 ft

Limit States

Factor	Str-1a	Str-1b	Str-IV	Serv
DC	1.25	0.90	1.50	1.00
DW	1.50	0.65	1.50	1.00
EH	0.90	0.90	0.90	1.00
EV	1.35	1.00	1.35	1.00
LL	1.75	1.75	0.00	1.00
LS	0.00	0.00	0.00	1.00

Note: Inward forces are positive, negative moment indicates inside face in tension.

						Str-1a		Str-1b		Str-IV		Service	
Dir	Factor	Force		Arm ft		F kips	M k-ft	F kips	M k-ft	F kips	M k-ft	F kips	M k-ft
H	DC	-1.5	x	3.51	=	-1.88	-6.58	-1.35	-4.74	-2.25	-7.9	-1.50	-5.27
H	DW	0	x	3.51	=	0.00	0.00	0.00	0.00	0.00	0	0.00	0
H	EH	0.12	x	3.51	=	0.11	0.38	0.11	0.38	0.11	0.379	0.12	0.421
H	EV	-10.7	x	3.51	=	-14.47	-50.80	-10.72	-37.63	-14.47	-50.8	-10.72	-37.6
H	LL	-2.71	x	3.51	=	-4.74	-16.65	-4.74	-16.65	0.00	0	-2.71	-9.51
H	LS	0	x	3.51	=	0.00	0.00	0.00	0.00	0.00	0	0.00	0
H	EH	17.13	x	1.755	=	15.42	27.06	15.42	27.06	15.42	27.06	17.13	30.06
H	EH	1.725	x	1.17	=	1.55	1.82	1.55	1.82	1.55	1.816	1.72	2.018
	Totals					-4.01	-44.77	0.27	-29.76	0.36	-29.44	4.05	-19.90

Stem Design Forces: **Mu = -44.77 k-ft** **Ma = -19.90 k-ft** **Vu = -4.01 k**

		Str-1a	Str-1b	Str-IV	Service
FTG:	B =	8.25 ft	8.25 ft	8.25 ft	8.25 ft
	B/6 =	1.375 ft	1.375 ft	1.375 ft	1.375 ft
	e =	-0.348 ft	-0.698 ft	-0.570 ft	-1.024 ft
Total Vertical =		71.89 k	55.20 k	65.79 k	52.57 k
	Pressure @ P1 (Toe)	10.92 psf	10.09 psf	11.28 psf	11.12 psf
	Pressure @ P2 (Heel)	6.51 psf	3.30 psf	4.67 psf	1.63 psf
	Pressure @ FF Stem (Toe)	10.38 psf	9.26 psf	10.48 psf	9.97 psf
	Pressure @ RF Stem (Heel)	9.18 psf	7.41 psf	8.68 psf	7.38 psf
	Upward Bending Moment (Heel)	92.52 k-ft	58.35 k-ft	75.06 k-ft	44.29 k-ft
	Upward Shear (Heel)	39.23 k	26.77 k	33.36 k	22.51 k
	Downward Overburden Moment (Heel)	-49.47 k-ft	-36.65 k-ft	-49.47 k-ft	-36.65 k-ft
	Downward Overburden Shear (Heel)	-19.79 k	-14.66 k	-19.79 k	-14.66 k
	Downward Heel Weight Moment (Heel)	-5.86 k-ft	-4.22 k-ft	-7.03 k-ft	-4.69 k-ft
	Downward Heel Weight Shear (Heel)	-2.34 k	-1.69 k	-2.81 k	-1.88 k
	Net Upward Bending Moment (Heel)	37.19 k-ft	17.49 k-ft	18.56 k-ft	2.96 k-ft
	Net Upward Shear (Heel)	17.10 k	10.42 k	10.76 k	5.98 k
	Upward Bending Moment (Toe)	5.369 k-ft	4.906 k-ft	5.506 k-ft	5.368 k-ft
	Upward Shear (Toe)	10.65 k	9.67 k	10.88 k	10.54 k

Footing Design Forces: **Upward Mu = 37.19 k-ft** **Upward Ma = 5.37 k-ft** **Up. Shear Vu = 17.10 k**

DELTA
ENGINEERS, ARCHITECTS, & LAND SURVEYORS
860 Hooper Road, Endwell, NY 13760
www.deltaengineers.com
Phone: (607) 231-6600
Fax: (607) 231-6650

JOB 2016.059.009
DESCIPTION 28x8u8
SHEET NO. ____ OF ____ SCALE ____
CALCULATED BY rja DATE 7/5/2016
CHECKED BY ____ DATE ____

Stem and Footing Design Forces - Stablilty about Heel - structure without live load reaction

Footing Width	8.25 ft
Toe width	1 ft
Heel Width	5 ft
Footing Thickness	2.5 ft
Overburned Ht over Heel	20.94 ft

Limit States

Factor	Str-1a	Str-1b	Str-IV	Serv
DC	1.25	0.90	1.50	1.00
DW	1.50	0.65	1.50	1.00
EH	0.90	0.90	0.90	1.00
EV	1.35	1.00	1.35	1.00
LL	1.75	1.75	0.00	1.00
LS	0.00	0.00	0.00	1.00

Note: Inward forces are positive, negative moment indicates inside face in tension.

						Str-1a		Str-1b		Str-IV		Service	
Dir	Factor	Force		Arm ft		F kips	M k-ft	F kips	M k-ft	F kips	M k-ft	F kips	M k-ft
H	DC	-1.5	x	3.51	=	-1.88	-6.58	-1.35	-4.74	-2.25	-7.9	-1.50	-5.27
H	DW	0	x	3.51	=	0.00	0.00	0.00	0.00	0.00	0	0.00	0
H	EH	0.12	x	3.51	=	0.11	0.38	0.11	0.38	0.11	0.379	0.12	0.421
H	EV	-10.7	x	3.51	=	-14.47	-50.80	-10.72	-37.63	-14.47	-50.8	-10.72	-37.6
H	LL	0	x	3.51	=	0.00	0.00	0.00	0.00	0.00	0	0.00	0
H	LS	0	x	3.51	=	0.00	0.00	0.00	0.00	0.00	0	0.00	0
H	EH	2.632	x	1.755	=	2.37	4.16	2.37	4.16	2.37	4.157	2.63	4.619
H	EH	0.265	x	1.17	=	0.24	0.28	0.24	0.28	0.24	0.279	0.26	0.31
Totals						-13.63	-52.56	-9.35	-37.55	-14.01	-53.88	-9.20	-37.54

Stem Design Forces: **Mu = -53.88 k-ft** **Ma = -37.54 k-ft** **Vu = -14.01 k**

FTG. B =	8.25 ft	8.25 ft	8.25 ft	8.25 ft
B/6 =	1.375 ft	1.375 ft	1.375 ft	1.375 ft
e =	0.583 ft	0.503 ft	0.568 ft	0.461 ft
Total Vertical =	63.93 k	47.24 k	65.79 k	48.02 k
Pressure @ P1 (Toe)	4.46 psf	3.63 psf	4.68 psf	3.87 psf
Pressure @ P2 (Heel)	11.04 psf	7.82 psf	11.27 psf	7.77 psf
Pressure @ FF Stem (Toe)	5.26 psf	4.14 psf	5.48 psf	4.34 psf
Pressure @ RF Stem (Heel)	7.05 psf	5.28 psf	7.28 psf	5.41 psf
Upward Bending Moment (Heel)	121.35 k-ft	87.18 k-ft	124.22 k-ft	87.30 k-ft
Upward Shear (Heel)	45.22 k	32.76 k	46.36 k	32.95 k
Downward Overburden Moment (Heel)	-49.47 k-ft	-36.65 k-ft	-49.47 k-ft	-36.65 k-ft
Downward Overburden Shear (Heel)	-19.79 k	-14.66 k	-19.79 k	-14.66 k
Downward Heel Weight Moment (Heel)	-5.86 k-ft	-4.22 k-ft	-7.03 k-ft	-4.69 k-ft
Downward Heel Weight Shear (Heel)	-2.34 k	-1.69 k	-2.81 k	-1.88 k
Net Upward Bending Moment (Heel)	66.02 k-ft	46.32 k-ft	67.72 k-ft	45.97 k-ft
Net Upward Shear (Heel)	23.09 k	16.41 k	23.76 k	16.42 k
Upward Bending Moment (Toe)	2.363 k-ft	1.9 k-ft	2.473 k-ft	2.013 k-ft
Upward Shear (Toe)	4.86 k	3.89 k	5.08 k	4.11 k

Footing Design Forces: **Upward Mu = 67.72 k-ft** **Upward Ma = 45.97 k-ft** **Up. Shear Vu = 23.76 k**

DELTA
ENGINEERS, ARCHITECTS, & LAND SURVEYORS
860 Hooper Road, Endwell, NY 13760
www.deltaengineers.com
Phone: (607) 231-6600
Fax: (607) 231-6650

JOB 2016.059.009
DESCIPTION 28x8u8
SHEET NO. ____ OF ____ SCALE ____
CALCULATED BY rja DATE 7/5/2016
CHECKED BY ____ DATE ____

Final Condition with Live Load Effects - Sum Forces and Moments About "Toe"

Toe Width	1	ft	Backfill Soil (phi)	32	deg	Soil Weight	140	pcf							
Wall Width	12	in							Ka =	0.31					
Stem Width	2.25	ft	Limit States						Resistance Factors						
Heel Width	5	ft	Factor	Str-1a	Str-1b	Str IV	Serv		Sliding	0.9					
Footing Width	8.25	ft	DW	1.50	0.65	1.50	1.00		Bearing	0.45					
Stem Height	3.51	ft	EH	1.50	1.50	1.50	1.00		Moment	0.9					
Footing Thickness	2.5	ft	EV	1.35	1.00	1.35	1.00		Shear	0.9					
Fill Height	8.6	ft	LL	1.75	1.75	0.00	1.00								
Structure Height	8.83	ft	LS	1.75	1.75	0.00	1.00		Factored Bearing Resistance	15.53					
Note: Downward and outward forces are positive									LL Surcharge	2	ft				

								Str-1a		Str-1b		Str IV		Service	
	Dir	Factor	Force		Arm ft			F kips	M k-ft	F kips	M k-ft	F kips	M k-ft	F kips	M k-ft
Structure Reaction	V	DC	3.18	x	2.13	=		3.98	8.45	2.86	6.08	4.77	10.14	3.18	6.76
	V	DW	0	x	2.13	=		0.00	0.00	0.00	0.00	0.00	0.00	0.00	0.00
	V	EH	0.35	x	2.13	=		0.53	1.12	0.53	1.12	0.53	1.12	0.35	0.74
	V	EV	24.03	x	2.13	=		32.44	68.94	24.03	51.1	32.44	68.94	24.03	51.06
	V	LL	4.55	x	2.13	=		7.96	16.92	7.96	16.92	0.00	0.00	4.55	9.67
	H	DC	1.5	x	6.01	=		1.88	11.27	1.35	8.11	2.25	13.52	1.50	9.02
	H	DW	0	x	6.01	=		0.00	0.00	0.00	0.00	0.00	0.00	0.00	0.00
	H	EH	-0.12	x	6.01	=		-0.18	-1.08	-0.18	-1.08	-0.18	-1.08	-0.12	-0.72
	H	EV	10.72	x	6.01	=		14.47	86.98	10.72	64.43	14.47	86.98	10.72	64.43
	H	LL	2.71	x	6.01	=		4.74	28.50	4.74	28.50	0.00	0.00	2.71	16.29
	H	LS	0	x	6.01	=		0.00	0.00	0.00	0.00	0.00	0.00	0.00	0.00
Soil Above Heel	V	EV	14.66	x	5.75	=		19.79	113.78	14.66	84.28	19.79	113.78	14.66	84.28
Soil Above Stem	V	EV	1.53	x	2.94	=		2.06	6.05	1.53	4.48	2.06	6.05	1.53	4.48
EH from Soil Above	H	EH	-4.51	x	3.01	=		-6.76	-20.31	-6.76	-20.31	-6.76	-20.31	-4.51	-13.54
EH on Stem FTG	H	EH	-0.78	x	2.00	=		-1.17	-2.33	-1.17	-2.33	-1.17	-2.33	-0.78	-1.56
Stem Weight	V	DC	1.185	x	2.13	=		1.48	3.15	1.07	2.27	1.78	3.78	1.18	2.52
Ftg Weight	V	DC	3.094	x	4.13	=		3.87	15.95	2.78	11.49	4.64	19.14	3.09	12.76
LS on Stem FTG	H	LS	-0.52	x	3.01	=		-0.90	-2.72	-0.90	-2.72	0.00	0.00	-0.52	-1.55
Totals									334.65		252.29		299.71		244.63
Total Vertical								72.10		55.41		66.00		52.57	
Net Horizontal								12.08		7.80		8.62		9.01	
Resultant Loacation								4.64	ft	4.55	ft	4.54	ft	4.65	ft
Eccentricity								-0.52	ft	-0.43	ft	-0.42	ft	-0.53	ft
bf'								7.22	ft	7.39	ft	7.42	ft	7.19	ft
Bearing Pressure								9.99	ksf	7.49	ksf	8.90	ksf	7.31	ksf
Eccentricity within middle half								YES		YES		YES		YES	
Sliding Resistance								32.44	kips	24.93	kips	29.69	kips	23.65	

DELTA
ENGINEERS, ARCHITECTS, & LAND SURVEYORS
860 Hooper Road, Endwell, NY 13760
www.deltaengineers.com
Phone: (607) 231-6600
Fax: (607) 231-6650

JOB 2016.059.009
DESCIPTION 28x8u8
SHEET NO. ____ OF ____ SCALE ____
CALCULATED BY rja DATE 7/5/2016
CHECKED BY ____ DATE ____

Final Condition without Live Load Effects - Sum Forces and Moments About "Toe"

Toe Width	1 ft	Backfill Soil (phi)	32 deg	Soil Weight	140 pcf
Wall Width	12 in			Ka =	0.307
Stem Width	2.25 ft				
Heel Width	5 ft				
Footing Width	8.25 ft				
Stem Height	3.51 ft				
Footing Thickness	2.5 ft				
Fill Height	8.6 ft				
Structure Height	8.83 ft				

Limit States

Factor	Str-1a	Str-1b	Str IV	Serv
DC	1.25	0.90	1.50	1.00
DW	1.50	0.65	1.50	1.00
EH	1.50	1.50	1.50	1.00
EV	1.35	1.00	1.35	1.00
LL	1.75	1.75	0.00	1.00
LS	1.75	1.75	0.00	1.00

Resistance Factors

Sliding	0.9
Bearing	0.45
Moment	0.9
Shear	0.9

Factored Bearing Resistance 15.525

Note: Downward and outward forces are positive

LL Surcharge 2 ft

		Dir	Factor	Force		Arm ft		Str-1a F kips	Str-1a M k-ft	Str-1b F kips	Str-1b M k-ft	Str IV F kips	Str IV M k-ft	Service F kips	Service M k-ft
Structure Reaction		V	DC	3.18	x	2.13	=	3.98	8.45	2.86	6.08	4.77	10.14	3.18	6.76
		V	DW	0	x	2.13	=	0.00	0.00	0.00	0.00	0.00	0.00	0.00	0.00
		V	EH	0.35	x	2.13	=	0.53	1.12	0.53	1.12	0.53	1.12	0.35	0.74
		V	EV	24.03	x	2.13	=	32.44	68.94	24.03	51.1	32.44	68.94	24.03	51.06
		V	LL	0	x	2.13	=	0.00	0.00	0.00	0.00	0.00	0.00	0.00	0.00
		H	DC	1.5	x	6.01	=	1.88	11.27	1.35	8.11	2.25	13.52	1.50	9.02
		H	DW	0	x	6.01	=	0.00	0.00	0.00	0.00	0.00	0.00	0.00	0.00
		H	EH	-0.12	x	6.01	=	-0.18	-1.08	-0.18	-1.08	-0.18	-1.08	-0.12	-0.72
		H	EV	10.72	x	6.01	=	14.47	86.98	10.72	64.43	14.47	86.98	10.72	64.43
		H	LL	0	x	6.01	=	0.00	0.00	0.00	0.00	0.00	0.00	0.00	0.00
		H	LS	0	x	6.01	=	0.00	0.00	0.00	0.00	0.00	0.00	0.00	0.00
Soil Above Heel		V	EV	14.66	x	5.75	=	19.79	113.78	14.66	84.28	19.79	113.78	14.66	84.28
Soil Above Stem		V	EV	1.53	x	2.94	=	2.06	6.05	1.53	4.48	2.06	6.05	1.53	4.48
EH from Soil Above		H	EH	-4.51	x	3.01	=	-6.76	-20.31	-6.76	-20.31	-6.76	-20.31	-4.51	-13.54
EH on Stem FTG		H	EH	-0.78	x	2.00	=	-1.17	-2.33	-1.17	-2.33	-1.17	-2.33	-0.78	-1.56
Stem Weight		V	DC	1.185	x	2.13	=	1.48	3.15	1.07	2.27	1.78	3.78	1.18	2.52
Ftg Weight		V	DC	3.094	x	4.13	=	3.87	15.95	2.78	11.49	4.64	19.14	3.09	12.76
LS on Stem FTG		H	LS	-0.52	x	3.01	=	-0.90	-2.72	-0.90	-2.72	0.00	0.00	-0.52	-1.55
Totals									289.23		206.87		299.71		218.68
Total Vertical								64.14		47.45		66.00		48.02	
Net Horizontal								7.34		3.06		8.62		6.30	
Resultant Loacation								4.51 ft		4.36 ft		4.54 ft		4.55 ft	
Eccentricity								0.38 ft		0.23 ft		0.42 ft		0.43 ft	
bf'								7.48 ft		7.78 ft		7.42 ft		7.39 ft	
Bearing Pressure								8.57 ksf		6.10 ksf		8.90 ksf		6.50 ksf	
Eccentricity within middle half								YES		YES		YES		YES	
Sliding Resistance								28.86 kips		21.35 kips		29.69 kips		21.61	

DELTA
ENGINEERS, ARCHITECTS, & LAND SURVEYORS
860 Hooper Road, Endwell, NY 13760
www.deltaengineers.com
Phone: (607) 231-6600
Fax: (607) 231-6650

JOB	2016.059.009			
DESCIPTION	28x8u8			
SHEET NO.		OF	SCALE	
CALCULATED BY	rja	DATE	7/5/2016	
CHECKED BY		DATE		

Stem Inside Face Reinforcing Design

Limit State: Strength

MATERIAL PROPERTIES:

1 Concrete Strength, F'c	5	ksi
2 Reinforcing Steel Yield, Fy	60	ksi
3 Concrete Unit Weight	150	pcf
4 Soil Unit Weight	120	pcf

Member Design Width b =	12.00	in
Member Thickness Ts =	27.00	in
Bar Cover =	2.00	in
Bar Size =	6	
de=Ts-Cov-Bar Size/2 =	24.63	in

Ec = 57000 * √f'c = 4031 ksi

Es = 29000 ksi

$$\rho_b = \frac{0.85\beta_1 \bullet f'c}{f_y} \bullet \left[\frac{87{,}000}{87{,}000 + f_y}\right] = 0.0335$$

n = Es / Ec = 7.20

fr = .37 * √f'c = 0.83 ksi

0.65 < β1 < 0.85 = 0.80

Unfactored Moment, Ma =	46.12	kip-ft
Design Ultimate Moment, Mu =	64.37	kip-ft
Ultimate Shear, Vu =	15.64	kips

Capacity Reduction Factors

Moment, ΦM =	0.9
Shear, ΦV =	0.9

dv = Greater of .72h or 0.9 de = 22.163 in

β = 2.0

Vc=ϕ(0.0316)β√f'c*b*dv= 33.83 kips/ft

$$\rho = \left[1 - \left(\sqrt{1 - \frac{2 \bullet M_u}{\phi b d^2 \bullet .85 f'c}}\right)\right] \bullet \frac{.85 f'c}{f_y} = 0.00199$$

Steel Area Req'd; As =ρ * b * d = 0.5892 in²/ft

Use #6 Bar @ 6.00 in oc

As Prov = 0.88 in²/ft

ρ Prov = 0.00299 **OK**

Check Min As > 1.33 AsReq **OK**

φMn = φAsfy(de-a/2)/12 = 95.844 kip-ft **OK**

c=As*Fy/.85*f'c*β1*b = 1.299 in

c/de ≤ 0.6; c/de = 0.053 OK

a = β_1c = 1.039 in

Ig = bt³/12 = 19683 in⁴

y_t = T/2 = 13.50 in

Mcr = fr*(Ig / yt) = 100.52 kip-ft

1.2Mcr= 120.63 kip-ft

CHECK CRACKING

$$k = \sqrt{2\rho n + \rho n^2} - \rho n = 0.187$$

j = 1 - (k/3) = 0.938

fs = Ma/(As*j*d) = 27.13 ksi

max spa ≤ [(700γe) / (βsfs)] - 2dc = 17 in

dc= 2.38 in

Bs=1+dc/(0.7*(h-dc))= 1.138

γe= 0.75

DELTA
ENGINEERS, ARCHITECTS, & LAND SURVEYORS
860 Hooper Road, Endwell, NY 13760
www.deltaengineers.com
Phone: (607) 231-6600
Fax: (607) 231-6650

JOB 2016.059.009
DESCIPTION 28x8u8
SHEET NO. ____ OF ____ SCALE ____
CALCULATED BY rja DATE 7/5/2016
CHECKED BY ____ DATE ____

Stem Outside Face Reinforcing Design

Limit State: Strength

MATERIAL PROPERTIES:

1 Concrete Strength, F'c	5	ksi
2 Reinforcing Steel Yield, Fy	60	ksi
3 Concrete Unit Weight	150	pcf
4 Soil Unit Weight	120	pcf

Member Design Width b =	12.00	in
Member Thickness Ts =	27.00	in
Bar Cover =	2.00	in
Bar Size =	5	
de=Ts-Cov-Bar Size/2 =	24.69	in

Ec = 57000 * √f'c = 4031 ksi
Es = 29000 ksi
n = Es / Ec = 7.20
0.65 < β1 < 0.85 = 0.80

$$\rho_b = \frac{0.85\beta_1 \bullet f'c}{f_y} \bullet \left[\frac{87{,}000}{87{,}000 + f_y}\right] = 0.0335$$

fr = .37 * √f'c = 0.83 ksi

Unfactored Moment, Ma =	1.24	kip-ft
Design Ultimate Moment, Mu =	2.09	kip-ft
Ultimate Shear, Vu =	1.32	kips

Capacity Reduction Factors
Moment, ΦM = 0.9
Shear, ΦV = 0.9

dv = Greater of .72h or 0.9 de = 22.219 in
β = 2.0
Vc=ϕ(0.0316)β√f'c*b*dv= 33.91 kips/ft **> 2Vu OK**

$$\rho = \left[1 - \left(\sqrt{1 - \frac{2 \bullet M_u}{\phi b d^2 \bullet .85 f'c}}\right)\right] \bullet \frac{.85 f'c}{f_y} = 0.00006$$

Steel Area Req'd; As =ρ * b * d = 0.0188 in²/ft
Use #5 Bar @ 12.00 in oc
As Prov = 0.31 in²/ft
ρ Prov = 0.00104 **OK**
Check Min As > 1.33 AsReq **OK**
φMn = φAsfy(de-a/2)/12 = 33.834 kip-ft **OK**

c=As*Fy/.85*f'c*β1*b = 0.451 in
c/de ≤ 0.6; c/de = 0.018 OK
a = β_1c = 0.361 in
Ig = bt³/12 = 19683 in⁴
y_t = T/2 = 13.50 in
Mcr = fr*(Ig / yt) = 100.52 kip-ft
1.2Mcr= 120.63 kip-ft

CHECK CRACKING

$$k = \sqrt{2\rho n + \rho n^2} - \rho n = 0.1149$$

j = 1 - (k/3) = 0.962
fs = Ma/(As*j*d) = 2.043 ksi
max spa ≤ [(700γe) / (βsfs)] - 2dc = 227 in

dc= 2.31 in
Bs=1+dc/(0.7*(h-dc))= 1.134
γe= 0.75

DELTA
ENGINEERS, ARCHITECTS, & LAND SURVEYORS
860 Hooper Road, Endwell, NY 13760
www.deltaengineers.com
Phone: (607) 231-6600
Fax: (607) 231-6650

JOB	2016.059.009				
DESCIPTION	28x8u8				
SHEET NO.		OF		SCALE	
CALCULATED BY	rja		DATE	7/5/2016	
CHECKED BY			DATE		

Footing Bottom Reinforcing design

Limit State: Strength

MATERIAL PROPERTIES:

1 Concrete Strength, F'c	5	ksi
2 Reinforcing Steel Yield, Fy	60	ksi
3 Concrete Unit Weight	150	pcf
4 Soil Unit Weight	120	pcf

Member Design Width b =	12.00	in
Member Thickness Ts =	30.00	in
Bar Cover =	3.00	in
Bar Size =	6	
de=Ts-Cov-Bar Size/2 =	26.63	in

Ec = 57000 * √f'c = 4031 ksi

Es = 29000 ksi

$$\rho_b = \frac{0.85\beta_1 \bullet f'c}{f_y} \bullet \left[\frac{87{,}000}{87{,}000 + f_y}\right] = 0.0335$$

n = Es / Ec = 7.20

fr = .37 * √f'c = 0.83 ksi

0.65 < β1 < 0.85 = 0.80

Unfactored Moment, Ma =	56.56	kip-ft
Design Ultimate Moment, Mu =	78.37	kip-ft
Ultimate Shear, Vu =	28.03	kips

Capacity Reduction Factors

Moment, ΦM =	0.9
Shear, ΦV =	0.9

dv = Greater of .72h or 0.9 de = 23.96 in

β = 2.0

Vc=ϕ(0.0316)β√f'c*b*dv= 36.57 kips/ft **> Vu OK**

$$\rho = \left[1 - \left(\sqrt{1 - \frac{2 \bullet M_u}{\phi b d^2 \bullet .85 f'c}}\right)\right] \bullet \frac{.85 f'c}{f_y} = 0.00208$$

Steel Area Req'd; As =ρ * b * d = 0.664 in²/ft

Use #6 Bar @ 6.00 in oc

As Prov = 0.88 in²/ft

ρ Prov = 0.00277 **OK**

Check Min As > 1.33 AsReq **OK**

φMn = φAsfy(de-a/2)/12 = 103.8 kip-ft **OK**

c=As*Fy/.85*f'c*β1*b = 1.2994 in

c/de ≤ 0.42; c/de = 0.0488 OK

$a = \beta_1 c$ = 1.0395 in

$I_g = bt^3/12$ = 27000 in⁴

$y_t = T/2$ = 15.00 in

Mcr = fr*(Ig / yt) = 124.10 kip-ft

1.2Mcr= 148.92 kip-ft

CHECK CRACKING

$$k = \sqrt{2\rho n + \rho n^2} - \rho n = 0.181$$

j = 1 - (k/3) = 0.940

fs = Ma/(As*j*d) = 30.7 ksi

max spa ≤ [(700γe) / (βsfs)] - 2dc = 15 in

dc= 2.38 in

Bs=1+dc/(0.7*(h-dc))= 1.1228

γe= 0.75

DELTA
ENGINEERS, ARCHITECTS, & LAND SURVEYORS
860 Hooper Road, Endwell, NY 13760
www.deltaengineers.com
Phone: (607) 231-6600
Fax: (607) 231-6650

JOB	2016.059.009				
DESCIPTION	28x8u8				
SHEET NO.		OF		SCALE	
CALCULATED BY	rja			DATE	7/5/2016
CHECKED BY				DATE	

Footing Top Reinforcing design

Limit State: Strength

MATERIAL PROPERTIES:

1 Concrete Strength, F'c	5	ksi
2 Reinforcing Steel Yield, Fy	60	ksi
3 Concrete Unit Weight	150	pcf
4 Soil Unit Weight	120	pcf

Member Design Width b =	12.00	in
Member Thickness Ts =	30.00	in
Bar Cover =	2.00	in
Bar Size =	5	
de=Ts-Cov-Bar Size/2 =	27.69	in

Ec = 57000 * √f'c = 4031 ksi

Es = 29000 ksi

n = Es / Ec = 7.20

0.65 < β1 < 0.85 = 0.80

$$\rho_b = \frac{0.85\beta_1 \bullet f'c}{f_y} \bullet \left[\frac{87{,}000}{87{,}000 + f_y}\right] = 0.0335$$

fr = .37 * √f'c = 0.83 ksi

Unfactored Moment, Ma =	6.14	kip-ft
Design Ultimate Moment, Mu =	8.29	kip-ft
Ultimate Shear, Vu =	3.32	kips

Capacity Reduction Factors

Moment, ΦM =	0.9
Shear, ΦV =	0.9

dv = Greater of .72h or 0.9 de = 24.92 in

β = 2.0

Vc=ϕ(0.0316)β√f'c*b*dv= 38.03 kips/ft **> Vu OK**

$$\rho = \left[1 - \left(\sqrt{1 - \frac{2 \bullet M_u}{\phi b d^2 \bullet .85f'c}}\right)\right] \bullet \frac{.85f'c}{f_y} = 0.00020$$

Steel Area Req'd; As =ρ * b * d = 0.067 in²/ft

Use #5 Bar @ 12.00 in oc

As Prov = 0.31 in²/ft

ρ Prov = 0.00092 **OK**

Check Min As > 1.33 AsReq **OK**

φMn = φAsfy(de-a/2)/12 = 37.98 kip-ft **OK**

c=As*Fy/.85*f'c*β1*b = 0.4512 in

c/de ≤ 0.42; c/de = 0.0163 OK

a = β_1c = 0.3609 in

Ig = bt³/12 = 27000 in⁴

y_t = T/2 = 15.00 in

Mcr = fr*(Ig / yt) = 124.10 kip-ft

1.2Mcr= 148.92 kip-ft

CHECK CRACKING

$$k = \sqrt{2\rho n + \rho n^2} - \rho n = 0.109$$

j = 1 - (k/3) = 0.964

fs = Ma/(As*j*d) = 9.004 ksi

max spa ≤ [(700γe) / (βsfs)] - 2dc = 52 in

dc= 2.31 in

Bs=1+dc/(0.7*(h-dc))= 1.1193

γe= 0.75

DELTA
ENGINEERS, ARCHITECTS, & LAND SURVEYORS
860 Hooper Road, Endwell, NY 13760
www.deltaengineers.com
Phone: (607) 231-6600
Fax: (607) 231-6650

JOB 2016.059.009

DESCIPTION 28x8 under 8

SHEET NO _____ OF _____ SCALE _____

CALCULATED BY rja DATE 7/5/2016

CHECKED BY _____ DATE _____

SERVICE LEVEL CANDE RUNS FOR REACTIONS

28x8under8c4servMOD.out

*** WELCOME TO CANDE-2013(version 3/1/2013) ***

MASTER CONTROL AND PIPE-TYPE DATA FOR PROBLEM # 1

CASE 4 SERVICE INPUT PRESENTED

DC – LOAD STEP 1
EH – " " 4
EV – " " 11
LL – " " 15

LOAD STEP 1~11 SAME FOR ALL CASES. ONLY LL STEP 15 PRESENTED FOR CASE 1, 2, 3

USER TITLE: 28x8_u8.6_c4serv

EXECUTION MODE	ANALYS
SOLUTION LEVEL	#2 AUTO
METHODOLOGY (LRFD OR SERVICE) ...	LRFD
NUMBER OF PIPE-ELEMENT GROUPS	1
MAXIMUM ITERATIONS PER STEP	50
CULVERT PIPE-TYPE	CONCRETE
CANNED MESH CODE #	3
NUMBER OF BEAM ELEMENTS	19

CONCRETE MATERIAL PROPERTIES ARE AS FOLLOWS

COMPRESSION STRENGTH (psi).....	6500.000
ELASTIC YOUNGS MODULUS (psi).....	4595487.000
POISSON RATIO	0.170
CONCRETE DENSITY (pcf)	150.000
INITIAL TENSILE CRACKING STRAIN.....	0.000010
INITIAL COMPRESSION YIELD STRAIN....	0.000687
INITIAL COMPRESSION CRUSH STRAIN ...	0.002000
SHEAR STRENGTH MODEL (NSHEAR) # ... (VARIABLE STRENGTH MODEL PRINTED IN OUTPUT)	1
CONCRETE CRACK-WIDTH MODEL NAME..... (DRIVEN BY TENSILE STRAIN IN STEEL)	HEGER-McGRATH

STEEL REINFORCEMENT MATERIAL PROPERTIES

TYPE OF STEEL CAGES (RSHAPE)	ARBIT
STEEL YIELD STRENGTH (psi).....	60000.000
STEEL ELASTIC MODULUS (psi).....	29000000.000

28x8under8c4servMOD.out

STEEL POISSON RATIO 0.300000

STEEL YIELDING STRAIN 0.001883

NONLINEAR MODELING CODE (1,2,3) 3

STEEL-BASED CRACKWIDTH PREDICTION PARAMETERS

REBAR SPACING INNER ROW (SLI), (in)	5.00
REBAR SPACING OUTER ROW (SLO), (in)	4.00
NUMBER OF STEEL LAYERS FOR INNER CAGE	1
NUMBER OF STEEL LAYERS FOR OUTER CAGE	1
HEGER-MCGRATH CODE NUMBER FOR STEEL TYPE..	3

WALL THICKNESS, REBAR AREAS AND COVER DEPTHS

WALL-THICK	INNER-REBAR	OUTER-REBAR	INNER-COVER	OUTER COVER
10.0000	0.0770	0.0200	2.0000	2.5000
10.0000	0.0770	0.0200	2.0000	2.5000
10.0000	0.0770	0.0200	2.0000	2.5000
10.0000	0.0770	0.0200	2.0000	2.5000
10.0000	0.0770	0.0200	2.0000	2.5000
10.0000	0.0770	0.0200	2.0000	2.5000
10.0000	0.0770	0.0200	2.0000	2.5000
10.0630	0.0770	0.0200	2.0000	2.5000
10.0630	0.0770	0.0880	2.0000	2.5000
10.6880	0.0200	0.0880	2.0000	2.5000
12.3750	0.0400	0.1300	2.0000	2.5000
15.2500	0.0400	0.1300	2.0000	2.5000
19.2500	0.0400	0.1300	2.0000	2.5000
27.0000	0.0400	0.1300	2.0000	2.5000
19.8130	0.0400	0.1300	2.0000	2.5000
15.4380	0.0400	0.1300	2.0000	2.5000
12.8750	0.0400	0.1300	2.0000	2.5000
12.0000	0.0400	0.1300	2.0000	2.5000
12.0000	0.0400	0.0880	2.0000	2.5000
12.0000	0.0400	0.0880	2.0000	2.5000

LRFD RESISTANCE FACTORS FOR STRENGTH-LIMIT STATES
AND CRACK-WIDTH LIMIT AT SERVICE LOAD

YIELDING OF REINFORCEMENT STEEL	0.950
CRUSHING OF CONCRETE OUTER FIBER.....	0.750
SHEARING FAILURE OF CONCRETE	0.900
SPLITTING OF CONCRETE IN RADIAL TENSION	0.900
ALLOWABLE CRACKWIDTH SERVICE LOAD (inch)....	0.010

LARGE DEFORMATION/BUCKLING CODE, IBUCK = 0
IBUCK=0, MEANS SMALL DEFORMATION THEORY FOR GROUP
AND NO BUCKLING PREDICTION.

28x8under8c4servMOD.out

- -

```
 REVIEW SYSTEM INPUT DATA


 LEVEL-2 DATA FOR ARCH-TYPE CANNED MESH

    *** MESH PARAMETERS ***
     TYPE OF MESH ------------------------------------- TREN
     DEPTH OF TRENCH ABOVE FOOTING LEVEL (FT) ---------   12.72
     WIDTH OF TRENCH AT FOOTING LEVEL (FT) ------------    7.00
     SLOPE OF TRENCH WALL (H/V) -----------------------    0.00
     MESH SPACING PARAMETER ---------------------------    1.00
     TOTAL SOIL HEIGHT ABOVE CROWN (FT) ---------------    8.61
     MESH HEIGHT ABOVE CROWN (FT) ---------------------    8.61
     SOIL DENSITY ABOVE MESH (PCF) --------------------  140.00
     NUMBER OF ELEMENT LAYERS ABOVE CROWN -------------    6


*** ARCH PARAMETERS ***
     CENTERLINE RISE OF ARCH (IN) ---------------------  101.00
     BOTTOM HALF SPAN OF ARCH (IN) --------------------  174.00
     SIDE RISE OF ARCH ABOVE FOOTING (IN) -------------   26.94
     FOOTING DEPTH (IN) -------------------------------   30.00
     OUTSIDE FOOTING WIDTH (IN) -----------------------   25.00
     INSIDE FOOTING WIDTH (IN) ------------------------   25.00
     NUMBER OF ARCH SEGMENTS DEFINED ------------------    3

*** CURVED TOP SEGMENT ***
     RADIUS (IN) --------------------------------------  406.00
     CENTRAL ANGLE (DEG) ------------------------------   24.64
     SEGMENT ARC LENGTH (IN) --------------------------  174.60
     NUMBER OF BEAM ELEMENTS IN SEGMENT ---------------   13

*** CURVED CORNER SEGMENT ***
     RADIUS (IN) --------------------------------------  132.38
     CENTRAL ANGLE (DEG) ------------------------------   16.15
     SEGMENT ARC LENGTH (IN) --------------------------   37.31
     NUMBER OF BEAM ELEMENTS IN SEGMENT ---------------    4

*** STRAIGHT SIDE SEGMENT ***
     DEFLECTION ANGLE (DEG) ---------------------------   90.00
     SEGMENT LENGTH (IN) ------------------------------   26.94
     NUMBER OF BEAM ELEMENTS IN SEGMENT ---------------    2

 FINITE ELEMENT INPUT CONTROLS (PREP)


THE DATA TO BE RUN IS ENTITLED ...

New Level 2 arch mesh

PRINT AND PLOT CONTROL CODES ...
  PRINT CONTROL FOR MESH DATA------------      3
  PLOT FILE CONTROL MESH & RESULS--------      3
  PRINT FINITE ELEMENT RESULTS ----------      1
  INPUT DATA CHECK CODE------------------      0
```

28x8under8c4servMOD.out

```
 KEY NUMBERS DESCRIBING MESH ...
   THE NUMBER OF LOAD STEPS IS------------   15
   TOTAL NUMBER OF NODES IS---------------  307
   TOTAL NUMBER OF ELEMENTS IS------------  269
   TOTAL NUMBER OF BEAM ELEMENTS IS-------   19
   MAX NUMBER OF BOUNDARY CONDITIONS IS---   42



 * * * BOUNDARY CONDITIONS * * *
  (FORCES = LBS; DISPLACEMENTS = INCHES; ROTATIONS = DEGREES)

  BOUNDARY      LOAD       X-FORCE      OR       Y-FORCE      OR       X-Y ROTATION
BEAM ROTATIONAL
     NODE       STEP       X-DISPLACEMENT       Y-DISPLACEMENT
BOUNDARY CONDITIONS

       290         12    F =   0.0000E+00    F =  -0.3560E+02       0.0000E+00
      F
       290         13    F =   0.0000E+00    F =  -0.3560E+02       0.0000E+00
      F
       290         14    F =   0.0000E+00    F =  -0.3560E+02       0.0000E+00
      F
       290         15    F =   0.0000E+00    F =  -0.3560E+02       0.0000E+00
      F
       293         12    F =   0.0000E+00    F =  -0.3560E+02       0.0000E+00
      F
       293         13    F =   0.0000E+00    F =  -0.3560E+02       0.0000E+00
      F
       293         14    F =   0.0000E+00    F =  -0.3560E+02       0.0000E+00
      F
       293         15    F =   0.0000E+00    F =  -0.3560E+02       0.0000E+00
      F
       287         15    F =   0.0000E+00    F =  -0.7000E+01       0.0000E+00
      F
       288         15    F =   0.0000E+00    F =  -0.1400E+02       0.0000E+00
      F
       289         15    F =   0.0000E+00    F =  -0.1400E+02       0.0000E+00
      F
       290         15    F =   0.0000E+00    F =  -0.1400E+02       0.0000E+00
      F
       291         15    F =   0.0000E+00    F =  -0.1400E+02       0.0000E+00
      F
       292         15    F =   0.0000E+00    F =  -0.1400E+02       0.0000E+00
      F
       293         15    F =   0.0000E+00    F =  -0.1400E+02       0.0000E+00
      F
       294         15    F =   0.0000E+00    F =  -0.1400E+02       0.0000E+00
      F
       295         15    F =   0.0000E+00    F =  -0.1400E+02       0.0000E+00
      F
       296         15    F =   0.0000E+00    F =  -0.1400E+02       0.0000E+00
      F

 * * * * * COMPLETED MESH GENERATION  * * * * *

 New Level 2 arch mesh

 CALCULATED KEY NUMBERS ...
```

28x8under8c4servMOD.out

```
 THE NUMBER OF DATA ERRORS IS-----------    0
 THE NUMBER OF SOIL MATERIALS IS--------    3
 THE NUMBER OF PIPE-TYPE GROUPS IS------    1
 THE NUMBER OF INTERFACE MATERIALS IS---   19
 BAND WIDTH ESTIMATE (MAX)--------------   88


* * * * MESH DATA HAS BEEN SAVED ON UNIT 14 * * * *


 BEAM-NODE SEQUENCE NUMBERS FOR EACH GROUP

    BEAM-ELEMENT GROUP NUMBER =    1

     BEAM-NODE       MESH-NODE      CONNECTED-GROUP-ELEMENTS
     SEQUENCE        NUMBER         FOREWARD-#    BACKWARD-#
         1             198              1             0
         2             194              2             1
         3             190              3             2
         4             167              4             3
         5             164              5             4
         6             161              6             5
         7             158              7             6
         8             138              8             7
         9             136              9             8
        10             134             10             9
        11             132             11            10
        12             130             12            11
        13             128             13            12
        14             118             14            13
        15             115             15            14
        16             109             16            15
        17             103             17            16
        18              97             18            17
        19              91             19            18
        20              80              0            19


 MATERIAL DESCRIPTION FOR SOILS AND INTERFACE
 (ALL DENSITY UNITS ARE pcf, ALL MODULUS UNITS ARE psi)

    PROPERTIES FOR MATERIAL  1   ********in site

         DENSITY =    0.14000E+03

         YOUNGS MODULUS= 0.5000E+04
         POISSONS RATIO= 0.3500E+00
         CONFINED MOD.= 0.8025E+04
         LATERAL COEFF.= 0.5385E+00


    PROPERTIES FOR MATERIAL  2   ********Footing

         DENSITY =    0.15000E+03

         YOUNGS MODULUS= 0.3122E+07
         POISSONS RATIO= 0.1700E+00
         CONFINED MOD.= 0.3356E+07
```

LATERAL COEFF.= 0.2048E+00

PROPERTIES FOR MATERIAL 3 ********ML95

DENSITY = 0.14000E+03

CONTROLS FOR DUNCAN SOIL MODEL
WITH SELIG HYPERBOLIC BULK MODULUS FORMULATION

LRFD STRESS CONTROL..... 0

ENTERING ELEMENT RATIO..... 0.5000

HYPERBOLIC STRESS-STRAIN PARAMETERS

SOIL CLASSIFICATION ML95

COHESION INTERCEPT C 4.0000

FRICTION ANGLE PHIO (DEG)..... 34.0000

10-FOLD REDUCTION IN PHIO(DEG).. 0.0000

SCALED MODULUS NUMBER ZK 440.0000

MODULUS EXPONENT ZN 0.4000

FAILURE RATIO RF 0.9500

INIT. BULK MODULUS NUMBER BI.... 48.3000

ULT. VOLUMETRIC STRAIN EU 0.0600

INTERFACE ELEMENT MATERIAL-GROUP PROPERTIES

MAT. NO.	NORMAL-ANGLE	COEF-FRICTION	TENSILE-RUPTURE	INITIAL-GAP
1	90.00	0.40000	50.00000	0.00000
2	88.03	0.40000	50.00000	0.00000
3	86.14	0.40000	50.00000	0.00000
4	84.24	0.40000	50.00000	0.00000
5	82.35	0.40000	50.00000	0.00000
6	80.45	0.40000	50.00000	0.00000
7	78.56	0.40000	50.00000	0.00000
8	76.66	0.40000	50.00000	0.00000
9	74.77	0.40000	50.00000	0.00000
10	72.87	0.40000	50.00000	0.00000
11	70.97	0.40000	50.00000	0.00000
12	69.08	0.40000	50.00000	0.00000
13	67.18	0.40000	50.00000	0.00000
14	66.55	0.40000	50.00000	0.00000
15	11.42	0.40000	50.00000	0.00000
16	7.38	0.40000	50.00000	0.00000
17	3.35	0.40000	50.00000	0.00000

18	0.00	0.40000	50.00000	0.00000
19	0.00	0.40000	50.00000	0.00000

LRFD TOTAL LOAD FACTORS PER LOAD STEP

LOAD STEP	LOAD FACTOR	USER COMMENT
1	1.000	Factor for load step #1
2	1.000	Factor for load step #2
3	1.000	Factor for load step #3
4	1.000	Factor for load step #4
5	1.000	Factor for load step #5
6	1.000	Factor for load step #6
7	1.000	Factor for load step #7
8	1.000	Factor for load step #8
9	1.000	Factor for load step #9
10	1.000	Factor for load step #10
11	1.000	Factor for load step #11
12	1.000	Factor for load step #12
13	1.000	Factor for load step #13
14	1.000	Factor for load step #14
15	1.000	Factor for load step #15

+ +

SOLUTION OUTPUT RESULTS

+ +

FINITE ELEMENT OUTPUT FOR LOAD STEP 1

+ +

CONCRETE, FACTORED-EVALUATION FOR GROUP 1, LOAD-STEP 1

STRUCTURAL RESPONSES OF CONCRETE-GROUP 1, LOAD-STEP 1

28x8under8c4servMOD.out

COORDINATES, DISPLACEMENTS AND CRACK DEPTHS ARE INCHES
Y-BAR IS "NEUTRAL AXIS" LOCATION FROM INTERIOR, INCHES
PRESSURES ARE LB/IN**2
MOMENTS ARE IN-LB/IN
THRUST AND SHEAR ARE LB/IN

LOCAL NODE	X-COORD. Y-COORD.	X-DISP. Y-DISP.	N-PRES. S-PRES.	MOMENT THRUST	Y-BAR CRACK DEPTH
1	0.00	0.00000E+00	-0.93020E-11	0.14815E+04	0.74181E+01
	101.00	-0.19917E+00	0.66496E-12	-0.12466E+03	0.63240E+01
2	13.43	-0.59083E-04	-0.41072E-11	0.14331E+04	0.74181E+01
	100.76	-0.19785E+00	-0.57582E-13	-0.12531E+03	0.62848E+01
3	26.84	0.54217E-04	0.10877E-11	0.12838E+04	0.74181E+01
	100.08	-0.19400E+00	-0.78012E-12	-0.12627E+03	0.61494E+01
4	40.22	0.48831E-03	0.68190E-11	0.10344E+04	0.72278E+01
	98.95	-0.18791E+00	0.17681E-11	-0.12786E+03	0.56455E+01
5	53.56	0.13049E-02	-0.91173E-11	0.68603E+03	0.48856E+01
	97.38	-0.18056E+00	-0.15990E-11	-0.13008E+03	0.00000E+00
6	66.84	0.24340E-02	0.99103E-11	0.24020E+03	0.48856E+01
	95.38	-0.17286E+00	0.24395E-11	-0.13292E+03	0.00000E+00
7	80.05	0.38344E-02	0.70822E-11	-0.30093E+03	0.48856E+01
	92.93	-0.16511E+00	0.86186E-12	-0.13638E+03	0.00000E+00
8	93.16	0.54605E-02	-0.10785E-10	-0.93519E+03	0.49166E+01
	90.05	-0.15754E+00	-0.41585E-11	-0.14045E+03	0.00000E+00
9	106.18	0.71833E-02	0.22222E-11	-0.16602E+04	0.25648E+01
	86.73	-0.15056E+00	-0.74564E-12	-0.14515E+03	0.65160E+01
10	119.08	0.85166E-02	0.32803E-11	-0.24750E+04	0.27446E+01
	82.99	-0.14564E+00	0.22030E-11	-0.15061E+03	0.71406E+01
11	131.84	0.90108E-02	-0.46923E-11	-0.33869E+04	0.34229E+01
	78.82	-0.14385E+00	-0.30785E-11	-0.15716E+03	0.78312E+01
12	144.47	0.86963E-02	0.12239E-10	-0.44165E+04	0.40506E+01
	74.23	-0.14450E+00	0.57362E-11	-0.16536E+03	0.97301E+01
13	156.93	0.76914E-02	-0.39305E-10	-0.55999E+04	0.48788E+01
	69.23	-0.14683E+00	-0.18576E-10	-0.17610E+03	0.12324E+02
14	169.22	0.62778E-02	-0.91162E-11	-0.69962E+04	0.13257E+02
	63.82	-0.14997E+00	0.42242E-10	-0.19880E+03	0.12796E+01
15	171.39	0.37845E-02	-0.60591E-11	-0.62786E+04	0.49926E+01
	54.75	-0.15054E+00	-0.14243E-10	-0.22056E+03	0.12718E+02
16	172.91	0.78521E-03	-0.11305E-11	-0.54464E+04	0.40905E+01
	45.55	-0.15098E+00	0.19008E-11	-0.22876E+03	0.99601E+01
17	173.78	-0.32498E-02	-0.45404E-12	-0.44794E+04	0.35348E+01
	36.26	-0.15128E+00	-0.11160E-10	-0.23319E+03	0.82382E+01
18	174.00	-0.86212E-02	-0.71395E-12	-0.33649E+04	0.33381E+01
	26.94	-0.15133E+00	-0.79760E-11	-0.23924E+03	0.74145E+01

19	174.00	-0.17923E-01	0.16205E-11	-0.16824E+04	0.58742E+01
	13.47	-0.15125E+00	0.43214E-11	-0.25087E+03	0.52536E+00
20	174.00	-0.27835E-01	0.39549E-11	-0.29104E-10	0.60775E+01
	0.00	-0.15119E+00	0.16619E-10	-0.26490E+03	0.00000E+00

SHEAR FORCE DIAGNOSTCS FOR CONCRETE-GROUP 1, LOAD STEP 1
-- V-factor is coefficient of sqrt(PFPC) equal to capacity.
-- Shear depth "d" is negative if measured from outer wall.
-- Stirrup load is excess shear force above capacity.

NODE	EQUIVALENT V-factor	SHEAR CAPACITY lbs/inch	APPLIED SHEAR lbs/inch	APPLIED/ CAPACITY ratio	SHEAR DEPTH-d inches	STIRRUP LOAD lbs/inch
1	1.68	1081.77	-0.15	0.000	8.00	0.00
2	1.68	1081.81	7.36	0.007	8.00	0.00
3	1.68	1081.86	14.84	0.014	8.00	0.00
4	1.68	1081.94	22.26	0.021	8.00	0.00
5	2.00	1291.93	29.57	0.023	8.00	0.00
6	4.50	2900.32	36.74	0.013	8.00	0.00
7	3.78	2286.61	43.76	0.019	-7.50	0.00
8	1.77	1076.91	50.61	0.047	-7.56	0.00
9	1.91	1163.23	57.33	0.049	-7.56	0.00
10	1.82	1203.43	64.29	0.053	-8.19	0.00
11	1.92	1529.44	72.28	0.047	-9.88	0.00
12	1.68	1728.70	82.39	0.048	-12.75	0.00
13	1.50	2026.53	96.05	0.047	-16.75	0.00
14	1.34	2644.94	13.51	0.005	-24.50	0.00
15	1.48	2072.05	-83.09	0.040	-17.31	0.00
16	1.67	1745.78	-96.46	0.055	-12.94	0.00
17	1.87	1567.34	-111.59	0.071	-10.38	0.00
18	2.17	1658.96	-122.20	0.074	-9.50	0.00
19	3.14	2407.65	-124.90	0.052	-9.50	0.00
20	4.50	3444.13	-124.90	0.036	-9.50	0.00

CONCRETE, FACTORED-EVALUATION FOR GROUP 1, LOAD-STEP 4

STRUCTURAL RESPONSES OF CONCRETE-GROUP 1, LOAD-STEP 4
COORDINATES, DISPLACEMENTS AND CRACK DEPTHS ARE INCHES
Y-BAR IS "NEUTRAL AXIS" LOCATION FROM INTERIOR, INCHES
PRESSURES ARE LB/IN**2
MOMENTS ARE IN-LB/IN
THRUST AND SHEAR ARE LB/IN

LOCAL NODE	X-COORD. Y-COORD.	X-DISP. Y-DISP.	N-PRES. S-PRES.	MOMENT THRUST	Y-BAR CRACK DEPTH
1	0.00	0.00000E+00	-0.80483E-11	0.16136E+04	0.74181E+01
	101.00	-0.26176E+00	0.75013E-12	-0.12937E+03	0.63992E+01
2	13.43	-0.60074E-04	-0.35695E-11	0.15663E+04	0.74181E+01
	100.76	-0.26032E+00	-0.33158E-13	-0.13001E+03	0.63664E+01

3	26.84	0.68359E-04	0.90937E-12	0.14203E+04	0.74181E+01
	100.08	-0.25611E+00	-0.81644E-12	-0.13096E+03	0.62549E+01
4	40.22	0.54995E-03	0.45432E-11	0.11761E+04	0.72278E+01
	98.95	-0.24942E+00	0.15325E-11	-0.13254E+03	0.58182E+01
5	53.56	0.14550E-02	-0.77926E-11	0.83513E+03	0.48856E+01
	97.38	-0.24131E+00	-0.11958E-11	-0.13474E+03	0.00000E+00
6	66.84	0.27108E-02	0.90719E-11	0.39875E+03	0.48856E+01
	95.38	-0.23276E+00	0.20024E-11	-0.13756E+03	0.00000E+00
7	80.05	0.42783E-02	0.45350E-11	-0.13086E+03	0.48856E+01
	92.93	-0.22410E+00	0.70664E-12	-0.14099E+03	0.00000E+00
8	93.16	0.61170E-02	-0.96618E-11	-0.75155E+03	0.49166E+01
	90.05	-0.21555E+00	-0.42064E-11	-0.14503E+03	0.00000E+00
9	106.18	0.81094E-02	0.17206E-11	-0.14610E+04	0.25648E+01
	86.73	-0.20751E+00	-0.68978E-12	-0.14969E+03	0.63683E+01
10	119.08	0.98126E-02	0.30085E-11	-0.22582E+04	0.27446E+01
	82.99	-0.20131E+00	0.18474E-11	-0.15510E+03	0.70528E+01
11	131.84	0.10809E-01	-0.67644E-11	-0.31505E+04	0.34229E+01
	78.82	-0.19797E+00	-0.39153E-11	-0.16160E+03	0.77344E+01
12	144.47	0.11110E-01	0.12071E-10	-0.41584E+04	0.40506E+01
	74.23	-0.19692E+00	0.55826E-11	-0.16975E+03	0.96247E+01
13	156.93	0.10817E-01	-0.46651E-10	-0.53183E+04	0.48788E+01
	69.23	-0.19747E+00	-0.12399E-10	-0.18044E+03	0.12199E+02
14	169.22	0.10193E-01	-0.13044E+01	-0.66892E+04	0.13257E+02
	63.82	-0.19882E+00	-0.12355E+01	-0.21137E+03	0.59667E+00
15	171.39	0.90317E-02	-0.42095E+00	-0.59783E+04	0.49926E+01
	54.75	-0.19907E+00	-0.17036E+00	-0.24226E+03	0.12535E+02
16	172.91	0.74056E-02	-0.38862E+00	-0.51752E+04	0.40905E+01
	45.55	-0.19927E+00	-0.15390E+00	-0.25218E+03	0.98251E+01
17	173.78	0.48066E-02	-0.37099E+00	-0.42558E+04	0.35348E+01
	36.26	-0.19943E+00	-0.14600E+00	-0.25837E+03	0.81230E+01
18	174.00	0.94346E-03	0.18588E+00	-0.32046E+04	0.33381E+01
	26.94	-0.19943E+00	-0.78005E-01	-0.26582E+03	0.72824E+01
19	174.00	-0.61032E-02	-0.28128E+00	-0.15768E+04	0.58742E+01
	13.47	-0.19935E+00	-0.11178E+00	-0.27871E+03	-0.49264E-01
20	174.00	-0.13725E-01	-0.74844E+00	-0.17280E-10	0.60775E+01
	0.00	-0.19928E+00	-0.14556E+00	-0.29424E+03	0.00000E+00

SHEAR FORCE DIAGNOSTCS FOR CONCRETE-GROUP 1, LOAD STEP 4
-- V-factor is coefficient of sqrt(PFPC) equal to capacity.
-- Shear depth "d" is negative if measured from outer wall.
-- Stirrup load is excess shear force above capacity.

EQUIVALENT	SHEAR	APPLIED	APPLIED/	SHEAR	STIRRUP

28x8under8c4servMOD.out

NODE	V-factor	CAPACITY lbs/inch	SHEAR lbs/inch	CAPACITY ratio	DEPTH-d inches	LOAD lbs/inch
1	1.68	1082.03	-0.15	0.000	8.00	0.00
2	1.68	1082.06	7.20	0.007	8.00	0.00
3	1.68	1082.11	14.52	0.013	8.00	0.00
4	1.68	1082.20	21.78	0.020	8.00	0.00
5	1.68	1082.31	28.94	0.027	8.00	0.00
6	3.52	2269.51	35.96	0.016	8.00	0.00
7	4.50	2719.05	42.82	0.016	-7.50	0.00
8	2.09	1274.46	49.52	0.039	-7.56	0.00
9	1.91	1163.49	56.09	0.048	-7.56	0.00
10	1.82	1203.68	62.90	0.052	-8.19	0.00
11	1.92	1529.72	70.75	0.046	-9.88	0.00
12	1.68	1728.95	80.71	0.047	-12.75	0.00
13	1.50	2026.75	94.22	0.046	-16.75	0.00
14	1.34	2645.56	12.93	0.005	-24.50	0.00
15	1.49	2073.18	-81.17	0.039	-17.31	0.00
16	1.67	1747.09	-92.35	0.053	-12.94	0.00
17	1.88	1568.85	-105.65	0.067	-10.38	0.00
18	2.20	1684.76	-116.78	0.069	-9.50	0.00
19	3.25	2487.32	-118.95	0.048	-9.50	0.00
20	4.50	3444.13	-115.16	0.033	-9.50	0.00

CONCRETE, FACTORED-EVALUATION FOR GROUP 1, LOAD-STEP 11

STRUCTURAL RESPONSES OF CONCRETE-GROUP 1, LOAD-STEP 11
COORDINATES, DISPLACEMENTS AND CRACK DEPTHS ARE INCHES
Y-BAR IS "NEUTRAL AXIS" LOCATION FROM INTERIOR, INCHES
PRESSURES ARE LB/IN**2
MOMENTS ARE IN-LB/IN
THRUST AND SHEAR ARE LB/IN

LOCAL NODE	X-COORD. Y-COORD.	X-DISP. Y-DISP.	N-PRES. S-PRES.	MOMENT THRUST	Y-BAR CRACK DEPTH
1	0.00	0.00000E+00	-0.61238E+01	0.16315E+05	0.74181E+01
	101.00	-0.15018E+01	-0.12144E+00	-0.13676E+04	0.69425E+01
2	13.43	-0.64826E-03	-0.63862E+01	0.15996E+05	0.74181E+01
	100.76	-0.14873E+01	-0.88358E+00	-0.13815E+04	0.69287E+01
3	26.84	0.62531E-03	-0.66486E+01	0.14981E+05	0.74181E+01
	100.08	-0.14442E+01	-0.16457E+01	-0.14016E+04	0.68889E+01
4	40.22	0.55424E-02	-0.70822E+01	0.13233E+05	0.74181E+01
	98.95	-0.13747E+01	-0.23026E+01	-0.14334E+04	0.68115E+01
5	53.56	0.15437E-01	-0.76552E+01	0.10689E+05	0.74181E+01
	97.38	-0.12827E+01	-0.27067E+01	-0.14747E+04	0.66152E+01
6	66.84	0.31047E-01	-0.83960E+01	0.72638E+04	0.74181E+01
	95.38	-0.11734E+01	-0.29407E+01	-0.15229E+04	0.61754E+01
7	80.05	0.52252E-01	-0.91428E+01	0.28468E+04	0.48856E+01
	92.93	-0.10559E+01	-0.31022E+01	-0.15766E+04	0.00000E+00
8	93.16	0.77821E-01	-0.98938E+01	-0.26727E+04	0.49166E+01

	90.05	-0.93756E+00	-0.32196E+01	-0.16352E+04	0.00000E+00
9	106.18	0.10665E+00	-0.10795E+02	-0.94044E+04	0.25648E+01
	86.73	-0.82186E+00	-0.30155E+01	-0.16967E+04	0.65952E+01
10	119.08	0.13538E+00	-0.11630E+02	-0.17483E+05	0.27446E+01
	82.99	-0.71909E+00	-0.28264E+01	-0.17593E+04	0.73350E+01
11	131.84	0.16049E+00	-0.12073E+02	-0.27043E+05	0.34229E+01
	78.82	-0.63899E+00	-0.26488E+01	-0.18240E+04	0.82600E+01
12	144.47	0.18139E+00	-0.12296E+02	-0.38156E+05	0.40506E+01
	74.23	-0.57898E+00	-0.25482E+01	-0.18919E+04	0.10420E+02
13	156.93	0.19855E+00	-0.12826E+02	-0.50876E+05	0.48788E+01
	69.23	-0.53425E+00	-0.24168E+01	-0.19645E+04	0.13430E+02
14	169.22	0.21304E+00	-0.16445E+02	-0.65326E+05	0.55838E+01
	63.82	-0.49978E+00	-0.12686E+02	-0.21564E+04	0.19334E+02
15	171.39	0.23368E+00	-0.73147E+01	-0.57357E+05	0.49926E+01
	54.75	-0.49435E+00	-0.29247E+01	-0.23008E+04	0.13814E+02
16	172.91	0.24921E+00	-0.72982E+01	-0.48541E+05	0.40905E+01
	45.55	-0.49117E+00	-0.29170E+01	-0.22760E+04	0.10611E+02
17	173.78	0.25592E+00	-0.78150E+01	-0.38880E+05	0.35348E+01
	36.26	-0.48983E+00	-0.31253E+01	-0.22430E+04	0.87118E+01
18	174.00	0.25120E+00	-0.81984E+01	-0.28430E+05	0.33381E+01
	26.94	-0.48916E+00	-0.31933E+01	-0.22364E+04	0.79243E+01
19	174.00	0.22578E+00	-0.34568E+01	-0.13902E+05	0.30043E+01
	13.47	-0.48804E+00	-0.13849E+01	-0.22641E+04	0.77112E+01
20	174.00	0.19032E+00	0.12847E+01	-0.14188E-09	0.60775E+01
	0.00	-0.48735E+00	0.42354E+00	-0.22968E+04	0.00000E+00

SHEAR FORCE DIAGNOSTCS FOR CONCRETE-GROUP 1, LOAD STEP 11
-- V-factor is coefficient of sqrt(PFPC) equal to capacity.
-- Shear depth "d" is negative if measured from outer wall.
-- Stirrup load is excess shear force above capacity.

NODE	EQUIVALENT V-factor	SHEAR CAPACITY lbs/inch	APPLIED SHEAR lbs/inch	APPLIED/ CAPACITY ratio	SHEAR DEPTH-d inches	STIRRUP LOAD lbs/inch
1	1.78	1148.58	-2.05	0.002	8.00	0.00
2	1.78	1149.33	49.68	0.043	8.00	0.00
3	1.78	1150.41	102.84	0.089	8.00	0.00
4	1.79	1152.12	159.79	0.139	8.00	0.00
5	1.79	1154.34	222.25	0.193	8.00	0.00
6	2.07	1338.32	291.96	0.218	8.00	0.00
7	4.50	2900.32	369.93	0.128	8.00	0.00
8	4.50	2741.89	456.11	0.166	-7.56	0.00
9	2.99	1823.72	551.39	0.302	-7.56	0.00
10	2.04	1346.37	656.69	0.488	-8.19	0.00
11	2.05	1631.80	769.65	0.472	-9.88	0.00
12	1.78	1826.04	887.30	0.486	-12.75	0.00
13	1.63	2198.42	1011.56	0.460	-16.75	0.00

14	1.39	2740.47	110.76	0.040	-24.50	0.00
15	1.56	2180.22	-899.91	0.413	-17.31	0.00
16	1.78	1860.68	-990.61	0.532	-12.94	0.00
17	2.02	1688.57	-1078.17	0.639	-10.38	0.00
18	2.47	1892.73	-1099.53	0.581	-9.50	0.00
19	3.48	2668.61	-1055.32	0.395	-9.50	0.00
20	4.50	3444.13	-1008.75	0.293	-9.50	0.00

CONCRETE, FACTORED-EVALUATION FOR GROUP 1, LOAD-STEP 15

STRUCTURAL RESPONSES OF CONCRETE-GROUP 1, LOAD-STEP 15
COORDINATES, DISPLACEMENTS AND CRACK DEPTHS ARE INCHES
Y-BAR IS "NEUTRAL AXIS" LOCATION FROM INTERIOR, INCHES
PRESSURES ARE LB/IN**2
MOMENTS ARE IN-LB/IN
THRUST AND SHEAR ARE LB/IN

LOCAL NODE	X-COORD. Y-COORD.	X-DISP. Y-DISP.	N-PRES. S-PRES.	MOMENT THRUST	Y-BAR CRACK DEPTH
1	0.00	0.00000E+00	-0.73266E+01	0.20325E+05	0.74181E+01
	101.00	-0.18100E+01	-0.91668E-01	-0.16133E+04	0.69766E+01
2	13.43	-0.74710E-03	-0.78093E+01	0.19945E+05	0.74181E+01
	100.76	-0.17919E+01	-0.94060E+00	-0.16283E+04	0.69645E+01
3	26.84	0.90363E-03	-0.82920E+01	0.18723E+05	0.74181E+01
	100.08	-0.17382E+01	-0.17895E+01	-0.16503E+04	0.69291E+01
4	40.22	0.71052E-02	-0.89657E+01	0.16582E+05	0.74181E+01
	98.95	-0.16515E+01	-0.25485E+01	-0.16858E+04	0.68588E+01
5	53.56	0.19544E-01	-0.97386E+01	0.13417E+05	0.74181E+01
	97.38	-0.15364E+01	-0.30552E+01	-0.17326E+04	0.66853E+01
6	66.84	0.39177E-01	-0.10629E+02	0.91089E+04	0.74181E+01
	95.38	-0.13994E+01	-0.34236E+01	-0.17886E+04	0.62888E+01
7	80.05	0.65831E-01	-0.11438E+02	0.35249E+04	0.48856E+01
	92.93	-0.12519E+01	-0.37289E+01	-0.18526E+04	0.00000E+00
8	93.16	0.97953E-01	-0.12162E+02	-0.34530E+04	0.49166E+01
	90.05	-0.11033E+01	-0.39786E+01	-0.19241E+04	0.00000E+00
9	106.18	0.13416E+00	-0.12939E+02	-0.11924E+05	0.25648E+01
	86.73	-0.95820E+00	-0.39342E+01	-0.20011E+04	0.66731E+01
10	119.08	0.17025E+00	-0.13688E+02	-0.21993E+05	0.27446E+01
	82.99	-0.82941E+00	-0.38871E+01	-0.20819E+04	0.73809E+01
11	131.84	0.20175E+00	-0.13996E+02	-0.33772E+05	0.34229E+01
	78.82	-0.72913E+00	-0.37415E+01	-0.21665E+04	0.83071E+01
12	144.47	0.22800E+00	-0.14018E+02	-0.47297E+05	0.40506E+01
	74.23	-0.65393E+00	-0.35727E+01	-0.22546E+04	0.10468E+02
13	156.93	0.24961E+00	-0.14347E+02	-0.62580E+05	0.44678E+01
	69.23	-0.59768E+00	-0.33943E+01	-0.23469E+04	0.13533E+02

28x8under8c4servMOD.out

14	169.22	0.26792E+00	-0.17894E+02	-0.79698E+05	0.55838E+01
	63.82	-0.55415E+00	-0.14285E+02	-0.25622E+04	0.19457E+02
15	171.39	0.29409E+00	-0.79486E+01	-0.69977E+05	0.45538E+01
	54.75	-0.54727E+00	-0.30876E+01	-0.27140E+04	0.13918E+02
16	172.91	0.31401E+00	-0.82480E+01	-0.59193E+05	0.40905E+01
	45.55	-0.54325E+00	-0.32060E+01	-0.26764E+04	0.10651E+02
17	173.78	0.32315E+00	-0.91585E+01	-0.47385E+05	0.36107E+01
	36.26	-0.54156E+00	-0.34698E+01	-0.26303E+04	0.87393E+01
18	174.00	0.31836E+00	-0.99777E+01	-0.34649E+05	0.33381E+01
	26.94	-0.54076E+00	-0.32970E+01	-0.26146E+04	0.79650E+01
19	174.00	0.28857E+00	-0.38597E+01	-0.16974E+05	0.30043E+01
	13.47	-0.53944E+00	-0.15439E+01	-0.26412E+04	0.77999E+01
20	174.00	0.24639E+00	0.22582E+01	-0.11096E-09	0.60775E+01
	0.00	-0.53863E+00	0.20928E+00	-0.26761E+04	0.00000E+00

SHEAR FORCE DIAGNOSTCS FOR CONCRETE-GROUP 1, LOAD STEP 15
-- V-factor is coefficient of sqrt(PFPC) equal to capacity.
-- Shear depth "d" is negative if measured from outer wall.
-- Stirrup load is excess shear force above capacity.

NODE	EQUIVALENT V-factor	SHEAR CAPACITY lbs/inch	APPLIED SHEAR lbs/inch	APPLIED/ CAPACITY ratio	SHEAR DEPTH-d inches	STIRRUP LOAD lbs/inch
1	1.80	1161.79	-3.03	0.003	8.00	0.00
2	1.80	1162.60	59.65	0.051	8.00	0.00
3	1.80	1163.78	125.21	0.108	8.00	0.00
4	1.81	1165.69	197.56	0.169	8.00	0.00
5	1.81	1168.21	278.23	0.238	8.00	0.00
6	2.08	1344.39	368.26	0.274	8.00	0.00
7	4.50	2900.32	467.67	0.161	8.00	0.00
8	4.50	2741.89	575.16	0.210	-7.56	0.00
9	2.97	1810.68	690.25	0.381	-7.56	0.00
10	2.03	1341.06	813.39	0.607	-8.19	0.00
11	2.08	1652.83	942.08	0.570	-9.88	0.00
12	1.80	1846.48	1072.54	0.581	-12.75	0.00
13	1.60	2166.21	1206.26	0.557	-16.75	0.00
14	1.40	2760.28	116.19	0.042	-24.50	0.00
15	1.58	2201.71	-1099.26	0.499	-17.31	0.00
16	1.81	1883.16	-1211.26	0.643	-12.94	0.00
17	2.05	1711.93	-1315.87	0.769	-10.38	0.00
18	2.50	1912.76	-1338.85	0.700	-9.50	0.00
19	3.51	2688.14	-1286.16	0.478	-9.50	0.00
20	4.50	3444.13	-1234.17	0.358	-9.50	0.00

28x8under8c1servMOD.out

*** WELCOME TO CANDE-2013(version 3/1/2013) ***

MASTER CONTROL AND PIPE-TYPE DATA FOR PROBLEM # 1

USER TITLE: 28x8_u8.6_c1serv

* * * BOUNDARY CONDITIONS * * *
(FORCES = LBS; DISPLACEMENTS = INCHES; ROTATIONS = DEGREES)

BOUNDARY NODE	LOAD STEP	X-FORCE OR X-DISPLACEMENT	Y-FORCE OR Y-DISPLACEMENT	X-Y ROTATION BEAM ROTATIONAL BOUNDARY CONDITIONS
287	12	F = 0.0000E+00	F = -0.2280E+02	0.0000E+00 F
287	13	F = 0.0000E+00	F = -0.2280E+02	0.0000E+00 F
287	14	F = 0.0000E+00	F = -0.2280E+02	0.0000E+00 F
287	15	F = 0.0000E+00	F = -0.2280E+02	0.0000E+00 F
293	12	F = 0.0000E+00	F = 0.0000E+00	0.0000E+00 F
293	13	F = 0.0000E+00	F = 0.0000E+00	0.0000E+00 F
293	14	F = 0.0000E+00	F = 0.0000E+00	0.0000E+00 F
293	15	F = 0.0000E+00	F = 0.0000E+00	0.0000E+00 F
287	15	F = 0.0000E+00	F = -0.7000E+01	0.0000E+00 F
288	15	F = 0.0000E+00	F = -0.1400E+02	0.0000E+00 F
289	15	F = 0.0000E+00	F = -0.1400E+02	0.0000E+00 F
290	15	F = 0.0000E+00	F = -0.1400E+02	0.0000E+00 F
291	15	F = 0.0000E+00	F = -0.1400E+02	0.0000E+00 F
292	15	F = 0.0000E+00	F = -0.1400E+02	0.0000E+00 F
293	15	F = 0.0000E+00	F = -0.1400E+02	0.0000E+00 F
294	15	F = 0.0000E+00	F = -0.1400E+02	0.0000E+00 F
295	15	F = 0.0000E+00	F = -0.1400E+02	0.0000E+00 F
296	15	F = 0.0000E+00	F = -0.1400E+02	0.0000E+00 F

CONCRETE, FACTORED-EVALUATION FOR GROUP 1, LOAD-STEP 15

28x8under8c1servMOD.out

STRUCTURAL RESPONSES OF CONCRETE-GROUP 1, LOAD-STEP 15
COORDINATES, DISPLACEMENTS AND CRACK DEPTHS ARE INCHES
Y-BAR IS "NEUTRAL AXIS" LOCATION FROM INTERIOR, INCHES
PRESSURES ARE LB/IN**2
MOMENTS ARE IN-LB/IN
THRUST AND SHEAR ARE LB/IN

LOCAL NODE	X-COORD. Y-COORD.	X-DISP. Y-DISP.	N-PRES. S-PRES.	MOMENT THRUST	Y-BAR CRACK DEPTH
1	0.00	0.00000E+00	-0.76767E+01	0.19431E+05	0.74181E+01
	101.00	-0.17014E+01	-0.15508E+00	-0.14953E+04	0.69863E+01
2	13.43	-0.68463E-03	-0.78257E+01	0.19009E+05	0.74181E+01
	100.76	-0.16841E+01	-0.11419E+01	-0.15131E+04	0.69721E+01
3	26.84	0.91341E-03	-0.79746E+01	0.17692E+05	0.74181E+01
	100.08	-0.16330E+01	-0.21288E+01	-0.15389E+04	0.69317E+01
4	40.22	0.68213E-02	-0.83141E+01	0.15463E+05	0.74181E+01
	98.95	-0.15506E+01	-0.29056E+01	-0.15792E+04	0.68524E+01
5	53.56	0.18587E-01	-0.88055E+01	0.12281E+05	0.74181E+01
	97.38	-0.14418E+01	-0.33477E+01	-0.16305E+04	0.66578E+01
6	66.84	0.37038E-01	-0.94860E+01	0.80788E+04	0.74181E+01
	95.38	-0.13130E+01	-0.35802E+01	-0.16892E+04	0.62005E+01
7	80.05	0.61974E-01	-0.10185E+02	0.27624E+04	0.48856E+01
	92.93	-0.11750E+01	-0.37098E+01	-0.17534E+04	0.00000E+00
8	93.16	0.91965E-01	-0.10902E+02	-0.37660E+04	0.49166E+01
	90.05	-0.10363E+01	-0.37694E+01	-0.18223E+04	0.00000E+00
9	106.18	0.12570E+00	-0.11764E+02	-0.11605E+05	0.25648E+01
	86.73	-0.90105E+00	-0.35427E+01	-0.18937E+04	0.66913E+01
10	119.08	0.15915E+00	-0.12572E+02	-0.20879E+05	0.27446E+01
	82.99	-0.78157E+00	-0.33589E+01	-0.19664E+04	0.73806E+01
11	131.84	0.18816E+00	-0.12970E+02	-0.31712E+05	0.34229E+01
	78.82	-0.68913E+00	-0.31318E+01	-0.20410E+04	0.83006E+01
12	144.47	0.21218E+00	-0.13127E+02	-0.44163E+05	0.40506E+01
	74.23	-0.62024E+00	-0.29547E+01	-0.21182E+04	0.10457E+02
13	156.93	0.23184E+00	-0.13604E+02	-0.58270E+05	0.48788E+01
	69.23	-0.56904E+00	-0.27562E+01	-0.21992E+04	0.13467E+02
14	169.22	0.24841E+00	-0.17236E+02	-0.74144E+05	0.55838E+01
	63.82	-0.52964E+00	-0.13166E+02	-0.23948E+04	0.19423E+02
15	171.39	0.27199E+00	-0.78395E+01	-0.65043E+05	0.49926E+01
	54.75	-0.52344E+00	-0.30146E+01	-0.25349E+04	0.13856E+02
16	172.91	0.28975E+00	-0.80061E+01	-0.54988E+05	0.40905E+01
	45.55	-0.51984E+00	-0.30714E+01	-0.25018E+04	0.10641E+02
17	173.78	0.29751E+00	-0.87497E+01	-0.44001E+05	0.35348E+01
	36.26	-0.51833E+00	-0.33234E+01	-0.24606E+04	0.87370E+01

28x8under8c1servMOD.out

18	174.00	0.29234E+00	-0.93724E+01	-0.32164E+05	0.33381E+01
	26.94	-0.51760E+00	-0.31764E+01	-0.24479E+04	0.79546E+01
19	174.00	0.26372E+00	-0.37141E+01	-0.15745E+05	0.30043E+01
	13.47	-0.51637E+00	-0.14857E+01	-0.24745E+04	0.77759E+01
20	174.00	0.22365E+00	0.19441E+01	-0.21373E-09	0.60775E+01
	0.00	-0.51561E+00	0.20514E+00	-0.25086E+04	0.00000E+00

SHEAR FORCE DIAGNOSTCS FOR CONCRETE-GROUP 1, LOAD STEP 15
-- V-factor is coefficient of sqrt(PFPC) equal to capacity.
-- Shear depth "d" is negative if measured from outer wall.
-- Stirrup load is excess shear force above capacity.

NODE	EQUIVALENT V-factor	SHEAR CAPACITY lbs/inch	APPLIED SHEAR lbs/inch	APPLIED/ CAPACITY ratio	SHEAR DEPTH-d inches	STIRRUP LOAD lbs/inch
1	1.79	1155.45	-1.98	0.002	8.00	0.00
2	1.79	1156.41	64.73	0.056	8.00	0.00
3	1.80	1157.80	132.01	0.114	8.00	0.00
4	1.80	1159.96	201.46	0.174	8.00	0.00
5	1.80	1162.72	274.93	0.236	8.00	0.00
6	2.22	1433.19	354.36	0.247	8.00	0.00
7	4.50	2900.32	440.97	0.152	8.00	0.00
8	4.17	2544.93	534.91	0.210	-7.56	0.00
9	2.84	1732.54	637.11	0.368	-7.56	0.00
10	1.98	1304.94	748.56	0.574	-8.19	0.00
11	2.07	1645.12	866.85	0.527	-9.88	0.00
12	1.79	1838.79	988.76	0.538	-12.75	0.00
13	1.59	2148.85	1116.20	0.519	-16.75	0.00
14	1.39	2752.11	103.12	0.037	-24.50	0.00
15	1.57	2192.40	-1026.98	0.468	-17.31	0.00
16	1.80	1873.36	-1128.14	0.602	-12.94	0.00
17	2.03	1701.69	-1223.66	0.719	-10.38	0.00
18	2.49	1903.38	-1244.09	0.654	-9.50	0.00
19	3.49	2675.82	-1193.90	0.446	-9.50	0.00
20	4.50	3444.13	-1143.87	0.332	-9.50	0.00

28x8under8c2servMOD.out

*** WELCOME TO CANDE-2013(version 3/1/2013) ***

MASTER CONTROL AND PIPE-TYPE DATA FOR PROBLEM # 1

USER TITLE: 28x8_u8.6_c2serv

* * * BOUNDARY CONDITIONS * * *
(FORCES = LBS; DISPLACEMENTS = INCHES; ROTATIONS = DEGREES)

BOUNDARY NODE	LOAD STEP	X-FORCE OR X-DISPLACEMENT	Y-FORCE OR Y-DISPLACEMENT	X-Y ROTATION BEAM ROTATIONAL BOUNDARY CONDITIONS
291	12	F = 0.0000E+00	F = -0.4600E+02	0.0000E+00 F
291	13	F = 0.0000E+00	F = -0.4600E+02	0.0000E+00 F
291	14	F = 0.0000E+00	F = -0.4600E+02	0.0000E+00 F
291	15	F = 0.0000E+00	F = -0.4600E+02	0.0000E+00 F
293	12	F = 0.0000E+00	F = 0.0000E+00	0.0000E+00 F
293	13	F = 0.0000E+00	F = 0.0000E+00	0.0000E+00 F
293	14	F = 0.0000E+00	F = 0.0000E+00	0.0000E+00 F
293	15	F = 0.0000E+00	F = 0.0000E+00	0.0000E+00 F
287	15	F = 0.0000E+00	F = -0.7000E+01	0.0000E+00 F
288	15	F = 0.0000E+00	F = -0.1400E+02	0.0000E+00 F
289	15	F = 0.0000E+00	F = -0.1400E+02	0.0000E+00 F
290	15	F = 0.0000E+00	F = -0.1400E+02	0.0000E+00 F
291	15	F = 0.0000E+00	F = -0.1400E+02	0.0000E+00 F
292	15	F = 0.0000E+00	F = -0.1400E+02	0.0000E+00 F
293	15	F = 0.0000E+00	F = -0.1400E+02	0.0000E+00 F
294	15	F = 0.0000E+00	F = -0.1400E+02	0.0000E+00 F
295	15	F = 0.0000E+00	F = -0.1400E+02	0.0000E+00 F
296	15	F = 0.0000E+00	F = -0.1400E+02	0.0000E+00 F

28x8under8c2servMOD.out

STRUCTURAL RESPONSES OF CONCRETE-GROUP 1, LOAD-STEP 15
COORDINATES, DISPLACEMENTS AND CRACK DEPTHS ARE INCHES
Y-BAR IS "NEUTRAL AXIS" LOCATION FROM INTERIOR, INCHES
PRESSURES ARE LB/IN**2
MOMENTS ARE IN-LB/IN
THRUST AND SHEAR ARE LB/IN

LOCAL NODE	X-COORD. Y-COORD.	X-DISP. Y-DISP.	N-PRES. S-PRES.	MOMENT THRUST	Y-BAR CRACK DEPTH
1	0.00	0.00000E+00	-0.70943E+01	0.19591E+05	0.74181E+01
	101.00	-0.17479E+01	-0.83901E-01	-0.15585E+04	0.69739E+01
2	13.43	-0.72248E-03	-0.75462E+01	0.19220E+05	0.74181E+01
	100.76	-0.17304E+01	-0.92379E+00	-0.15732E+04	0.69615E+01
3	26.84	0.86551E-03	-0.79980E+01	0.18031E+05	0.74181E+01
	100.08	-0.16787E+01	-0.17637E+01	-0.15948E+04	0.69255E+01
4	40.22	0.68368E-02	-0.86303E+01	0.15950E+05	0.74181E+01
	98.95	-0.15952E+01	-0.25240E+01	-0.16298E+04	0.68540E+01
5	53.56	0.18809E-01	-0.93611E+01	0.12881E+05	0.74181E+01
	97.38	-0.14843E+01	-0.30360E+01	-0.16761E+04	0.66763E+01
6	66.84	0.37693E-01	-0.10196E+02	0.87126E+04	0.74181E+01
	95.38	-0.13525E+01	-0.34056E+01	-0.17315E+04	0.62688E+01
7	80.05	0.63318E-01	-0.10950E+02	0.33206E+04	0.48856E+01
	92.93	-0.12107E+01	-0.36814E+01	-0.17945E+04	0.00000E+00
8	93.16	0.94192E-01	-0.11633E+02	-0.34031E+04	0.49166E+01
	90.05	-0.10679E+01	-0.38900E+01	-0.18645E+04	0.00000E+00
9	106.18	0.12898E+00	-0.12421E+02	-0.11551E+05	0.25648E+01
	86.73	-0.92846E+00	-0.38047E+01	-0.19392E+04	0.66701E+01
10	119.08	0.16362E+00	-0.13161E+02	-0.21231E+05	0.27446E+01
	82.99	-0.80480E+00	-0.37122E+01	-0.20171E+04	0.73771E+01
11	131.84	0.19380E+00	-0.13481E+02	-0.32554E+05	0.34229E+01
	78.82	-0.70865E+00	-0.35216E+01	-0.20979E+04	0.83019E+01
12	144.47	0.21892E+00	-0.13535E+02	-0.45563E+05	0.40506E+01
	74.23	-0.63669E+00	-0.33197E+01	-0.21815E+04	0.10462E+02
13	156.93	0.23956E+00	-0.13920E+02	-0.60273E+05	0.48788E+01
	69.23	-0.58297E+00	-0.31104E+01	-0.22688E+04	0.13473E+02
14	169.22	0.25702E+00	-0.17487E+02	-0.76775E+05	0.55838E+01
	63.82	-0.54148E+00	-0.13724E+02	-0.24753E+04	0.19439E+02
15	171.39	0.28193E+00	-0.78573E+01	-0.67391E+05	0.49926E+01
	54.75	-0.53493E+00	-0.30361E+01	-0.26220E+04	0.13862E+02
16	172.91	0.30082E+00	-0.80922E+01	-0.56995E+05	0.40905E+01
	45.55	-0.53112E+00	-0.31204E+01	-0.25867E+04	0.10645E+02
17	173.78	0.30935E+00	-0.89212E+01	-0.45621E+05	0.35560E+01

	36.26	-0.52951E+00	-0.33830E+01	-0.25430E+04	0.87393E+01
18	174.00	0.30447E+00	-0.96428E+01	-0.33355E+05	0.33381E+01
	26.94	-0.52875E+00	-0.32333E+01	-0.25289E+04	0.79595E+01
19	174.00	0.27546E+00	-0.37725E+01	-0.16335E+05	0.30043E+01
	13.47	-0.52747E+00	-0.15090E+01	-0.25555E+04	0.77875E+01
20	174.00	0.23453E+00	0.20979E+01	-0.10550E-09	0.60775E+01
	0.00	-0.52669E+00	0.21540E+00	-0.25898E+04	0.00000E+00

SHEAR FORCE DIAGNOSTCS FOR CONCRETE-GROUP 1, LOAD STEP 15
-- V-factor is coefficient of sqrt(PFPC) equal to capacity.
-- Shear depth "d" is negative if measured from outer wall.
-- Stirrup load is excess shear force above capacity.

NODE	EQUIVALENT V-factor	SHEAR CAPACITY lbs/inch	APPLIED SHEAR lbs/inch	APPLIED/ CAPACITY ratio	SHEAR DEPTH-d inches	STIRRUP LOAD lbs/inch
1	1.80	1158.84	-2.87	0.002	8.00	0.00
2	1.80	1159.64	58.10	0.050	8.00	0.00
3	1.80	1160.80	121.75	0.105	8.00	0.00
4	1.80	1162.68	191.71	0.165	8.00	0.00
5	1.81	1165.17	269.45	0.231	8.00	0.00
6	2.10	1353.68	355.93	0.263	8.00	0.00
7	4.50	2900.32	451.06	0.156	8.00	0.00
8	4.50	2741.89	553.67	0.202	-7.56	0.00
9	2.95	1797.15	663.74	0.369	-7.56	0.00
10	2.02	1333.70	781.96	0.586	-8.19	0.00
11	2.07	1648.61	905.85	0.549	-9.88	0.00
12	1.79	1842.36	1031.95	0.560	-12.75	0.00
13	1.60	2162.74	1162.06	0.537	-16.75	0.00
14	1.40	2756.04	111.30	0.040	-24.50	0.00
15	1.57	2196.92	-1060.44	0.483	-17.31	0.00
16	1.80	1878.12	-1167.18	0.621	-12.94	0.00
17	2.04	1706.67	-1267.39	0.743	-10.38	0.00
18	2.49	1907.76	-1289.32	0.676	-9.50	0.00
19	3.50	2681.77	-1238.14	0.462	-9.50	0.00
20	4.50	3444.13	-1187.32	0.345	-9.50	0.00

28x8under8c3servMOD.out

*** WELCOME TO CANDE-2013(version 3/1/2013) ***

MASTER CONTROL AND PIPE-TYPE DATA FOR PROBLEM # 1

USER TITLE: 28x8_u8.6_c3serv

* * * BOUNDARY CONDITIONS * * *
(FORCES = LBS; DISPLACEMENTS = INCHES; ROTATIONS = DEGREES)

BOUNDARY NODE	LOAD STEP	X-FORCE OR X-DISPLACEMENT	Y-FORCE OR Y-DISPLACEMENT	X-Y ROTATION BEAM ROTATIONAL BOUNDARY CONDITIONS
288	12	F = 0.0000E+00	F = -0.3560E+02	0.0000E+00 F
288	13	F = 0.0000E+00	F = -0.3560E+02	0.0000E+00 F
288	14	F = 0.0000E+00	F = -0.3560E+02	0.0000E+00 F
288	15	F = 0.0000E+00	F = -0.3560E+02	0.0000E+00 F
293	12	F = 0.0000E+00	F = 0.0000E+00	0.0000E+00 F
293	13	F = 0.0000E+00	F = 0.0000E+00	0.0000E+00 F
293	14	F = 0.0000E+00	F = 0.0000E+00	0.0000E+00 F
293	15	F = 0.0000E+00	F = 0.0000E+00	0.0000E+00 F
287	15	F = 0.0000E+00	F = -0.7000E+01	0.0000E+00 F
288	15	F = 0.0000E+00	F = -0.1400E+02	0.0000E+00 F
289	15	F = 0.0000E+00	F = -0.1400E+02	0.0000E+00 F
290	15	F = 0.0000E+00	F = -0.1400E+02	0.0000E+00 F
291	15	F = 0.0000E+00	F = -0.1400E+02	0.0000E+00 F
292	15	F = 0.0000E+00	F = -0.1400E+02	0.0000E+00 F
293	15	F = 0.0000E+00	F = -0.1400E+02	0.0000E+00 F
294	15	F = 0.0000E+00	F = -0.1400E+02	0.0000E+00 F
295	15	F = 0.0000E+00	F = -0.1400E+02	0.0000E+00 F
296	15	F = 0.0000E+00	F = -0.1400E+02	0.0000E+00 F

CONCRETE, FACTORED-EVALUATION FOR GROUP 1, LOAD-STEP 15

28x8under8c3servMOD.out

STRUCTURAL RESPONSES OF CONCRETE-GROUP 1, LOAD-STEP 15
COORDINATES, DISPLACEMENTS AND CRACK DEPTHS ARE INCHES
Y-BAR IS "NEUTRAL AXIS" LOCATION FROM INTERIOR, INCHES
PRESSURES ARE LB/IN**2
MOMENTS ARE IN-LB/IN
THRUST AND SHEAR ARE LB/IN

LOCAL NODE	X-COORD. Y-COORD.	X-DISP. Y-DISP.	N-PRES. S-PRES.	MOMENT THRUST	Y-BAR CRACK DEPTH
1	0.00	0.00000E+00	-0.82244E+01	0.20432E+05	0.74181E+01
	101.00	-0.17596E+01	-0.16343E+00	-0.15280E+04	0.69995E+01
2	13.43	-0.69088E-03	-0.83175E+01	0.19973E+05	0.74181E+01
	100.76	-0.17413E+01	-0.12210E+01	-0.15471E+04	0.69852E+01
3	26.84	0.10162E-02	-0.84107E+01	0.18544E+05	0.74181E+01
	100.08	-0.16876E+01	-0.22786E+01	-0.15748E+04	0.69445E+01
4	40.22	0.72437E-02	-0.86923E+01	0.16141E+05	0.74181E+01
	98.95	-0.16011E+01	-0.31000E+01	-0.16178E+04	0.68644E+01
5	53.56	0.19603E-01	-0.91294E+01	0.12733E+05	0.74181E+01
	97.38	-0.14871E+01	-0.35580E+01	-0.16723E+04	0.66689E+01
6	66.84	0.38937E-01	-0.97624E+01	0.82659E+04	0.74181E+01
	95.38	-0.13523E+01	-0.37975E+01	-0.17345E+04	0.62010E+01
7	80.05	0.65019E-01	-0.10419E+02	0.26547E+04	0.48856E+01
	92.93	-0.12080E+01	-0.39114E+01	-0.18023E+04	0.00000E+00
8	93.16	0.96354E-01	-0.11110E+02	-0.41891E+04	0.47655E+01
	90.05	-0.10631E+01	-0.39558E+01	-0.18745E+04	0.61271E+00
9	106.18	0.13156E+00	-0.11949E+02	-0.12358E+05	0.25648E+01
	86.73	-0.92197E+00	-0.37116E+01	-0.19491E+04	0.67206E+01
10	119.08	0.16640E+00	-0.12752E+02	-0.21970E+05	0.27446E+01
	82.99	-0.79761E+00	-0.35126E+01	-0.20249E+04	0.73942E+01
11	131.84	0.19650E+00	-0.13134E+02	-0.33147E+05	0.34229E+01
	78.82	-0.70169E+00	-0.32527E+01	-0.21022E+04	0.83123E+01
12	144.47	0.22137E+00	-0.13276E+02	-0.45946E+05	0.40506E+01
	74.23	-0.63040E+00	-0.30379E+01	-0.21816E+04	0.10468E+02
13	156.93	0.24167E+00	-0.13750E+02	-0.60399E+05	0.44678E+01
	69.23	-0.57749E+00	-0.28043E+01	-0.22643E+04	0.13529E+02
14	169.22	0.25875E+00	-0.17385E+02	-0.76616E+05	0.55838E+01
	63.82	-0.53685E+00	-0.13153E+02	-0.24582E+04	0.19446E+02
15	171.39	0.28304E+00	-0.80113E+01	-0.67185E+05	0.49926E+01
	54.75	-0.53046E+00	-0.30271E+01	-0.25946E+04	0.13868E+02
16	172.91	0.30133E+00	-0.82348E+01	-0.56775E+05	0.40905E+01
	45.55	-0.52676E+00	-0.30920E+01	-0.25590E+04	0.10649E+02
17	173.78	0.30928E+00	-0.90360E+01	-0.45416E+05	0.35470E+01

	36.26	-0.52521E+00	-0.33582E+01	-0.25152E+04	0.87432E+01
18	174.00	0.30389E+00	-0.96942E+01	-0.33195E+05	0.33381E+01
	26.94	-0.52447E+00	-0.31431E+01	-0.25006E+04	0.79633E+01
19	174.00	0.27424E+00	-0.37750E+01	-0.16255E+05	0.30043E+01
	13.47	-0.52321E+00	-0.15100E+01	-0.25268E+04	0.77937E+01
20	174.00	0.23274E+00	0.21441E+01	-0.19645E-09	0.60775E+01
	0.00	-0.52244E+00	0.12312E+00	-0.25611E+04	0.00000E+00

SHEAR FORCE DIAGNOSTCS FOR CONCRETE-GROUP 1, LOAD STEP 15
-- V-factor is coefficient of sqrt(PFPC) equal to capacity.
-- Shear depth "d" is negative if measured from outer wall.
-- Stirrup load is excess shear force above capacity.

NODE	EQUIVALENT V-factor	SHEAR CAPACITY lbs/inch	APPLIED SHEAR lbs/inch	APPLIED/ CAPACITY ratio	SHEAR DEPTH-d inches	STIRRUP LOAD lbs/inch
1	1.79	1157.21	-1.91	0.002	8.00	0.00
2	1.80	1158.24	70.28	0.061	8.00	0.00
3	1.80	1159.72	142.65	0.123	8.00	0.00
4	1.80	1162.03	216.33	0.186	8.00	0.00
5	1.81	1164.96	293.19	0.252	8.00	0.00
6	2.28	1471.47	375.21	0.255	8.00	0.00
7	4.50	2900.32	463.69	0.160	8.00	0.00
8	3.98	2428.76	558.92	0.230	-7.56	0.00
9	2.79	1699.33	661.98	0.390	-7.56	0.00
10	1.98	1308.21	773.99	0.592	-8.19	0.00
11	2.07	1648.88	892.61	0.541	-9.88	0.00
12	1.79	1842.37	1014.57	0.551	-12.75	0.00
13	1.58	2135.94	1141.87	0.535	-16.75	0.00
14	1.39	2755.20	98.18	0.036	-24.50	0.00
15	1.57	2195.50	-1063.73	0.485	-17.31	0.00
16	1.80	1876.57	-1167.14	0.622	-12.94	0.00
17	2.04	1704.99	-1264.19	0.741	-10.38	0.00
18	2.49	1905.75	-1283.99	0.674	-9.50	0.00
19	3.49	2676.86	-1232.17	0.460	-9.50	0.00
20	4.50	3444.13	-1181.32	0.343	-9.50	0.00

DELTA
ENGINEERS, ARCHITECTS, & LAND SURVEYORS
860 Hooper Road, Endwell, NY 13760
www.deltaengineers.com
Phone: (607) 231-6600
Fax: (607) 231-6650

JOB	2016.059.009				
DESCIPTION	28x8 under 8				
SHEET NO.		OF		SCALE	
CALCULATED BY	rja		DATE	7/1/2016	
CHECKED BY			DATE		

WINGWALL DESIGN

Project: 2016.059.009 BY: rja 6/23/2016
Anchored Wingwall Design CHK:

Wingwall Anchor Soil Pressure Diagram

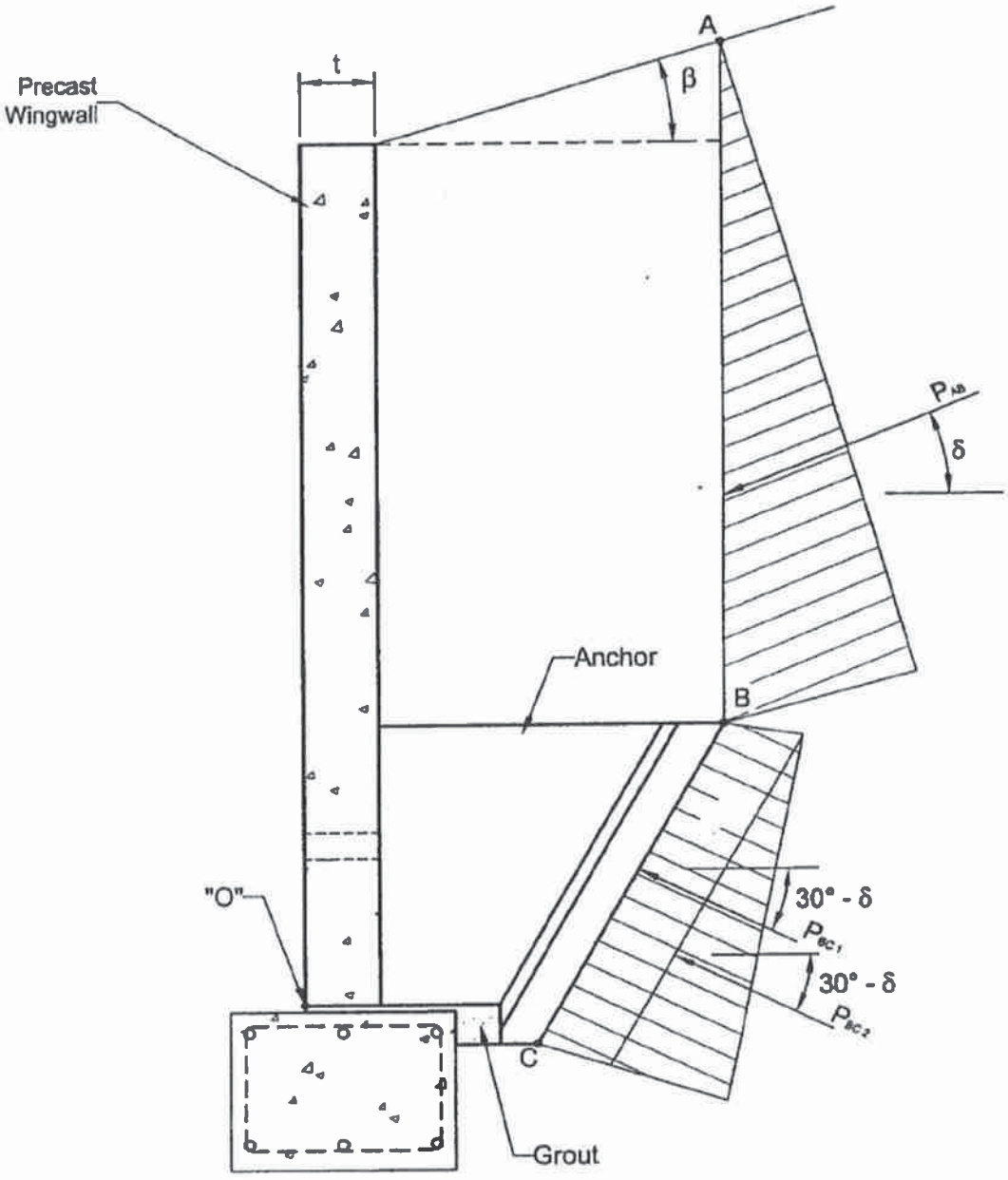

Project: 2016.059.009 BY: rja 6/21/2016
Anchored Wingwall Design CHK:

Controling Wall	WW1	
Backfill Slope perp to road	2	:1
Wingwall Angle $\Theta_1 + \Theta_2$ =	60	deg (with respect to slope, not road)
Effective Backfill Slope	23.41	deg
Rise to level grade	7.31	ft
Stem projection above grade	3	in.
Surcharge	0	~~ft~~

include LS in design (typ)

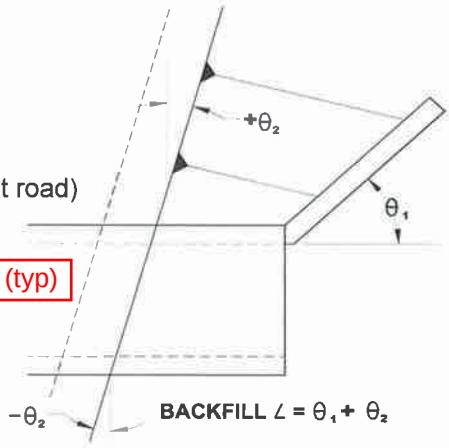

Wingwall Stability Check:

Wall Height (high) =	13.24 ft	ϕ_{AB} =	34
Wall Height (low) =	9.24 ft	θ_{AB} =	90
Wall Length =	18.84 ft	δ_{AB} =	26
Plate tributary width =	0.00 ft	$(Ka)_{AB}$ =	0.32
Unit Weight of Backfill, γ_{soil} =	140.00	ϕ_{BC} =	34
Unit Weight of Conc, γ_c =	150.00	θ_{BC} =	120
Adjusted Broken Backfill β'=	16.97 deg.	δ_{BC} =	17
Wall thickness =	10.00 in	$(Ka)_{BC}$ =	0.10
Bearing Resistance, ϕq_{ult} =	15525 psf (FACTORED)		
Friction Coefficient μ =	0.54 =0.8*TAN(ϕ)	Conc Railing Wt. =	0 lb/ft
Vehicle Collision Force =	0.00 k	Location wrt Stem F.F. =	0.625 ft
Distribution Length =	8.50 ft		
Location of Collision Force =	1.50 ft (Above top of wall)		

		Dist. To Anchor	Height at Anchor	Contributary width	Anchor type	Bearing Pressure		Stability Check
Anchor #1:	L1 =	2.25 ft	12.76 ft	4.75 ft	F	4304	OK	
Anchor #2:	L2 =	5.00 ft	11.70 ft	4.71 ft	E	4036	OK	
Anchor #3:	L3 =	4.42 ft	10.76 ft	4.71 ft	D	3872	OK	
Anchor #4:	L4 =	5.00 ft	9.70 ft	4.67 ft	C	3659	OK	
Anchor #5:	L5 =	0.00 ft	0.00 ft	0.00 ft		NA	NA	

Anchor Type Data

Anchor Type	Length at Bottom Anchor	Anchor End	Total	Length at Top Anchor	End	Total
	(in)	(in)	(in)	(in)	(in)	(in)
B	16	8.080	24.080	41.375	8.080	49.455
C	28	8.080	36.080	53.375	8.080	61.455
D	40	8.080	48.080	65.375	8.080	73.455
E	52	8.080	60.080	77.375	8.080	85.455
F	64	8.080	72.080	89.375	8.080	97.455
G	76	8.080	84.080	101.375	8.080	109.455
H	88	8.080	96.080	113.375	8.080	121.455

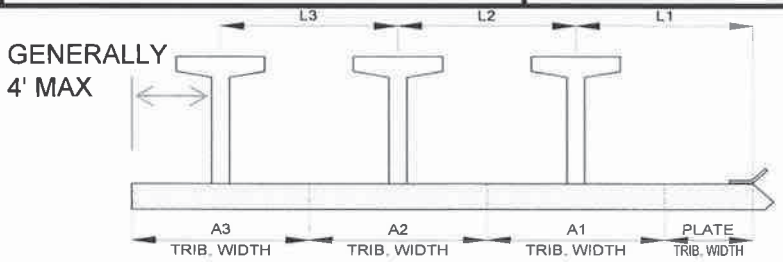

Project: 2016.059.009
Anchored Wingwall Design

BY: rja 6/21/2016
CHK:

Anchor #1 Stability Check

Limit State	Str 1-a	Str 1-b	Str IV	Service	Extre-II
EH	1.50	1.50	1.50	1.00	1.50
LL/LS	1.75	1.75	0.00	1.00	0.50
EV	1.00	1.35	1.35	1.00	1.00
DC	0.90	1.25	1.50	1.00	0.90
EQ	0.00	0.00	0.00	0.00	0.00
CT	0.00	0.00	0.00	0.00	1.00
Resistance Factors					
Sliding	0.90	0.90	0.90	1.00	0.90
Bearing	0.45	0.45	0.45	0.33	0.45

Soil Properties:

Active Earth Coeff., $(Ka)_{AB}$ = 0.321
Active Earth Coeff., $(Ka)_{ABH}$ = 0.290
Active Earth Coeff., $(Ka)_{ABV}$ = 0.138
Active Earth Coeff., $(Ka)_{BC}$ = 0.105
Active Earth Coeff., $(Ka)_{BCH}$ = 0.100
Active Earth Coeff., $(Ka)_{BCV}$ = 0.031

Modification Factor = 1.00

Overturning Check:

Anchor Height = 12.7623 ft
Design Wall Height, H = 16.03 ft
Anchor Type = F
Anchor Length at Top, L_{top} = 8.12 ft
Anchor Length at Bot., L_{bot} = 6.01 ft

Back slope $\beta 1$ = 23.41 deg.

Soil Pressure:

Horizontal (kah) :

Soil Pressure at A, σ_{LL} = 0 psf
Soil Pressure at B, σ_{Bab} = 507.87 psf
Soil Pressure at B, σ_{Bbc} = 175.56 psf
Soil Pressure at C, σ_{BOT} = 231.61 psf

Vertical (kav) :

Soil Pressure at A, σ_{LL} = 0 psf
Soil Pressure at B, σ_{Bab} = 242.24 psf
Soil Pressure at B, σ_{Bbc} = -53.67 psf
Soil Pressure at C, σ_{BOT} = -70.81 psf

Driving Forces:

Force $P_{Surcharge}$ = 0 lb/ft
Moment Arm, y_1 = 8.01 ft
Overturning Moment, DM1 = 0 ft-lb/ft
Force P_{ABH} = 3182 lb/ft
Moment Arm, y_2 = 7.68 ft
Overturning Moment, DM2 = 24423 ft-lb/ft
Force P_{BC1H} = 702 lb/ft
Moment Arm, y_3 = 1.50 ft
Overturning Moment, DM3 = 1053 ft-lb/ft
Force P_{BC2H} = 112 lb/ft
Moment Arm, y_4 = 0.83 ft
Overturning Moment, DM4 = 93 ft-lb/ft

Resisting Forces:

Weight of Wall, Ww = 1595 lb/ft
Dist. From PT. O, X_1 = 0.42 ft
Resisting Moment, RM1 = 665 ft-lb/ft
Backslope Soil, I_A = 1999.15 lb/ft
Dist. From PT. O, X_2 = 6.25 ft
Resisting Moment, RM2 = 12490 ft-lb/ft
Soil Above Anchor, I_B = 10531 lb/ft
Dist. From PT. O, X_3 = 4.89 ft
Resisting Moment, RM3 = 51538 ft-lb/ft
Weight of Soil, II_A = 2613 lb/ft
Dist. From PT. O, X_4 = 3.500 ft
Resisting Moment, RM4 = 9146 ft-lb/ft

Project: 2016.059.009
Anchored Wingwall Design

BY: rja 6/21/2016
CHK:

Anchor #1 Stability Check

Driving Forces (Con't):

Collision Force ,CT =	0	lb/ft
Moment Arm, y_5 =	14.26	ft
Overturning Moment, DM5 =	0	ft-lb/ft

Resisting Forces (Con't):

Weight of Soil, II_B =	683	lb/ft
Dist. From PT. O, X_5 =	7.096	ft
Resisting Moment, RM5 =	4847	ft-lb/ft
Force P_{ABV} =	1518	lb/ft
Moment Arm, x6 =	8.95	ft
Resisting Moment, RM6 =	13589	ft-lb/ft
Force P_{BC1V} =	-215	lb/ft
Moment Arm, x7 =	7.56	ft
Resisting Moment, RM7 =	-1623	ft-lb/ft
Force P_{BC2V} =	-34	lb/ft
Moment Arm, x8 =	7.10	ft
Resisting Moment, RM8 =	-243	ft-lb/ft
Weight of Conc. Railing =	0	lb/ft
Moment Arm, x9 =	0.625	ft
Resisting Moment, RM9 =	0	ft-lb/ft

Location of Resultant Force:

	Str 1-a	Str 1-b	Str IV	Service	Extre-II
Overturning Moment (k-ft):	38.35	38.35	38.35	25.57	38.35
Resisting Moment (k-ft):	74.74	100.92	101.09	74.80	74.74
Vertical Loads (lb) =	15366	20799	21198	15525	15366
x (ft) =	2.37	3.01	2.96	3.17	2.37
Footing Length, B (ft) =	6.84	6.84	6.84	6.84	6.84
e (ft) =	1.05	0.41	0.46	0.25	1.05

(note: 80% of soil weight used for overturning resist.)

Overturning Check:

1/3 B (ft) =	2.28	2.28	2.28	2.28	2.28
Is resultant within middle 2/3?	OK	OK	OK	OK	OK

Bearing Check: AASHTO 11.6.3.2

Resist. Mom. for Bearing (k-ft):	90.34	121.98	122.15	90.41	90.34
Vertical Loads for Bearing (lb) =	18531	25072	25471	18690	18531
x for bearing (ft) =	2.81	3.34	3.29	3.47	2.81
e for bearing (ft) =	0.61	0.08	0.13	-0.05	0.61
Beff (ft) =	4.74	6.02	5.92	6.34	4.74
Bearing Pressure (psf) =	3913	4168	4304	2947	3913
Bearing Resistance, ϕq_{ult} =	15525	15525	15525	3000	15525
	OK	OK	OK	OK	OK

Sliding Check:

Sliding Force (lb/ft) =	5994	5994	5994	3996	5994
Sliding Resistance =	8999	12176	12370	10085	8999
	OK	OK	OK	OK	OK

Project: 2016.059.009 BY: rja 6/23/2016
Anchored Wingwall Design CHK:

Anchor #1 w/FTG Stability Check

Limit State	Str 1-a	Str 1-b	Str IV	Service	Extre-II
EH	1.50	1.50	1.50	1.00	1.50
LL/LS	1.75	1.75	0.00	1.00	0.50
EV	1.00	1.35	1.35	1.00	1.00
DC	0.90	1.25	1.50	1.00	0.90
EQ	0.00	0.00	0.00	0.00	0.00
CT	0.00	0.00	0.00	0.00	1.00
Resistance Factors					
Sliding	0.90	0.90	0.90	1.00	0.90
Bearing	0.45	0.45	0.45	0.33	0.45

Soil Properties:

Active Earth Coeff., $(Ka)_{AB}$ = 0.321
Active Earth Coeff., $(Ka)_{ABH}$ = 0.290
Active Earth Coeff., $(Ka)_{ABV}$ = 0.138
Active Earth Coeff., $(Ka)_{BC}$ = 0.105
Active Earth Coeff., $(Ka)_{BCH}$ = 0.100
Active Earth Coeff., $(Ka)_{BCV}$ = 0.031

Modification Factor = 1.00

Footing Information:

Toe =	1.00	ft
Footing Stem Width(thickness) =	27	in
Footing Heel =	3.00	ft
Footing Width =	6.25	ft
WW Stem Offset wrt Ftg Stem	6.00	in
FTG Stem Height =	3.51	ft
FTG Thickness =	2.5	in
Back slope β1 =	23.41	deg.

Overturning Check:

Anchor Height = 12.7623 ft
Design Wall Height, H = 16.03 ft
Anchor Type = F
Anchor Length at Top, L_{top} = 8.12 ft
Anchor Length at Bot., L_{bot} = 6.01 ft

Soil Pressure:

Horizontal (kah) :

Soil Pressure at A, σ_{LL} = 0 psf
Soil Pressure at B, σ_{Bab} = 507.87 psf
Soil Pressure at B, σ_{Bbc} = 175.56 psf
Soil Pressure at C, σ_{BOT} = 231.61 psf
Soil Press. at top of ftg Stem = 649.75 psf
Soil Press. at Bottom of ftg = 800.48 psf

Vertical (kav) :

Soil Pressure at A, σ_{LL} = 0 psf
Soil Pressure at B, σ_{Bab} = 242.24 psf
Soil Pressure at B, σ_{Bbc} = -53.67 psf
Soil Pressure at C, σ_{BOT} = -70.81 psf
Soil Press. at top of ftg Stem = 309.91 psf
Soil Press. at Bottom of ftg = 381.81 psf

Driving Forces:

Force $P_{Surcharge}$ = 0 lb/ft
Moment Arm, y_1 = 8.01 ft
Overturning Moment, DM1 = 0 ft-lb/ft
Force P_{ABH} = 3182 lb/ft
Moment Arm, y_2 = 7.68 ft
Overturning Moment, DM2 = 24423 ft-lb/ft
Force P_{BC1H} = 702 lb/ft
Moment Arm, y_3 = 1.50 ft
Overturning Moment, DM3 = 1053 ft-lb/ft
Force P_{BC2H} = 112 lb/ft
Moment Arm, y_4 = 0.83 ft
Overturning Moment, DM4 = 93 ft-lb/ft

Resisting Forces:

Weight of Wall, Ww = 1595 lb/ft
Dist. From Ftg Toe, X_1 = 1.92 ft
Resisting Moment, RM1 = 3058 ft-lb/ft
Backslope Soil, I_A = 1999.15 lb/ft
Dist. From Ftg Toe, X_2 = 7.75 ft
Resisting Moment, RM2 = 15488 ft-lb/ft
Soil Above Anchor, I_B = 10531 lb/ft
Dist. From Ftg Toe, X_3 = 6.39 ft
Resisting Moment, RM3 = 67335 ft-lb/ft
Weight of Soil, II_A = 2613 lb/ft
Dist. From Ftg Toe, X_4 = 5.000 ft
Resisting Moment, RM4 = 13066 ft-lb/ft

Project: 2016.059.009 BY: rja 6/23/2016
Anchored Wingwall Design CHK:

Anchor #1 w/FTG Stability Check

Driving Forces (Con't):

Collision Force ,CT =	0	lb/ft
Moment Arm, y_5 =	14	ft
Overturning Moment, DM5 =	0	ft-lb/ft
Force P_{ftg} 1 =	2416	lb/ft
Moment Arm, y_5 =	1.86	ft
Overturning Moment, DM5 =	4492	ft-lb/ft
Force P_{ftg} 2 =	280	lb/ft
Moment Arm, y_6 =	1.24	ft
Overturning Moment, DM6 =	347	ft-lb/ft

Resisting Forces (Con't):

Weight of Soil, W_B =	683	lb/ft
Dist. From Ftg Toe, X_5 =	8.596	ft
Resisting Moment, RM5 =	5872	ft-lb/ft
Force P_{ABV} =	1518	lb/ft
Moment Arm, x6 =	10.45	ft
Resisting Moment, RM6 =	15865	ft-lb/ft
Force P_{BC1V} =	-215	lb/ft
Moment Arm, x7 =	9.06	ft
Resisting Moment, RM7 =	-1945	ft-lb/ft
Force P_{BC2V} =	-34	lb/ft
Moment Arm, x8 =	8.60	ft
Resisting Moment, RM8 =	-295	ft-lb/ft
Weight of Conc. Railing =	0	lb/ft
Moment Arm, x9 =	0.625	ft
Resisting Moment, RM9 =	0	ft-lb/ft
Force P_{ftgV}=	1286	lb/ft
Moment Arm, x10 =	6.25	ft
Resisting Moment, RM10 =	8038	ft-lb/ft
Footing Stem Weight =	1184.63	lb/ft
Moment Arm, x11 =	2.13	ft
Resisting Moment, RM11 =	2517	ft-lb/ft
Footing Weight =	195.313	lb/ft
Moment Arm, x12 =	3.13	ft
Resisting Moment, RM12 =	610	ft-lb/ft
Soil Over Footing Heel Psoil =	1474.2	lb/ft
Moment Arm, x13 =	4.75	ft
Resisting Moment, RM13 =	7002	ft-lb/ft

Location of Resultant Force:

	Str 1-a	Str 1-b	Str IV	Service	Extre-II
Overturning Moment (k-ft):	45.61	45.61	45.61	30.41	45.61
Resisting Moment (k-ft):	115.64	156.33	157.88	116.26	115.64
Vertical Loads (lb) =	19368	26251	26994	19665	19368
x (ft) =	3.62	4.22	4.16	4.37	3.62
Footing Length, B (ft) =	8.34	8.34	8.34	8.34	8.34
e (ft) =	0.55	-0.05	0.01	-0.20	0.55

(note: 80% of soil weight used for overturning resist.)

Overturning Check:

1/3 B (ft) =	2.78	2.78	2.78	2.78	2.78
Is resultant within middle 2/3?	OK	OK	OK	OK	OK

Bearing Check: AASHTO 11.6.3.2

Resist. Mom. for Bearing (k-ft):	135.99	183.81	185.35	136.61	135.99
Vertical Loads for Bearing (lb) =	22533	30524	31267	22831	22533
x for bearing (ft) =	4.01	4.53	4.47	4.65	4.01
e for bearing (ft) =	0.16	-0.36	-0.30	-0.48	0.16
Beff (ft) =	7.23	8.24	8.32	7.95	7.23
Bearing Pressure (psf) =	3116	3702	3759	2872	3116
Bearing Resistance, ϕq_{ult} =	15525	15525	15525	3000	15525
	OK	OK	OK	OK	OK

Sliding Check:

Sliding Force (lb/ft) =	10038	10038	10038	6692	10038
Sliding Resistance =	10943	14824	15185	12319	10943
	OK	OK	OK	OK	OK

Project: 2016.059.009
Anchored Wingwall Design

BY: rja 6/21/2016
CHK:

Anchor #2 Stability Check

Limit State	Str 1-a	Str 1-b	Str IV	Service	Extre-II
EH	1.50	1.50	1.50	1.00	1.50
LL/LS	1.75	1.75	0.00	1.00	0.50
EV	1.00	1.35	1.35	1.00	1.00
DC	0.90	1.25	1.50	1.00	0.90
EQ	0.00	0.00	0.00	0.00	0.00
CT	0.00	0.00	0.00	0.00	1.00
Resistance Factors					
Sliding	0.90	0.90	0.90	1.00	0.90
Bearing	0.45	0.45	0.45	0.33	0.45

Soil Properties:

Active Earth Coeff., $(Ka)_{AB}$ = 0.321
Active Earth Coeff., $(Ka)_{ABH}$ = 0.290
Active Earth Coeff., $(Ka)_{ABV}$ = 0.138
Active Earth Coeff., $(Ka)_{BC}$ = 0.105
Active Earth Coeff., $(Ka)_{BCH}$ = 0.100
Active Earth Coeff., $(Ka)_{BCV}$ = 0.031

Modification Factor = 1.00

Overturning Check:

Anchor Height = 11.7007 ft
Design Wall Height, H = 14.53 ft
Anchor Type = E
Anchor Length at Top, L_{top} = 7.12 ft
Anchor Length at Bot., L_{bot} = 5.01 ft

Back slope $\beta 1$ = 23.41 deg.

Soil Pressure:

Horizontal (kah) :

Soil Pressure at A, σ_{LL} = 0 psf
Soil Pressure at B, σ_{Bab} = 447.29 psf
Soil Pressure at B, σ_{Bbc} = 154.61 psf
Soil Pressure at C, σ_{BOT} = 210.66 psf

Vertical (kav) :

Soil Pressure at A, σ_{LL} = 0 psf
Soil Pressure at B, σ_{Bab} = 213.35 psf
Soil Pressure at B, σ_{Bbc} = -47.27 psf
Soil Pressure at C, σ_{BOT} = -64.41 psf

Driving Forces:

Force $P_{Surcharge}$ = 0 lb/ft
Moment Arm, y_1 = 7.27 ft
Overturning Moment, DM1 = 0 ft-lb/ft
Force P_{ABH} = 2468 lb/ft
Moment Arm, y_2 = 7.18 ft
Overturning Moment, DM2 = 17714 ft-lb/ft
Force P_{BC1H} = 618 lb/ft
Moment Arm, y_3 = 1.50 ft
Overturning Moment, DM3 = 928 ft-lb/ft
Force P_{BC2H} = 112 lb/ft
Moment Arm, y_4 = 0.83 ft
Overturning Moment, DM4 = 93 ft-lb/ft

Resisting Forces:

Weight of Wall, Ww = 1463 lb/ft
Dist. From PT. O, X_1 = 0.42 ft
Resisting Moment, RM1 = 609 ft-lb/ft
Backslope Soil, I_A = 1537.13 lb/ft
Dist. From PT. O, X_2 = 5.58 ft
Resisting Moment, RM2 = 8578 ft-lb/ft
Soil Above Anchor, I_B = 8176 lb/ft
Dist. From PT. O, X_3 = 4.39 ft
Resisting Moment, RM3 = 35925 ft-lb/ft
Weight of Soil, II_A = 2123 lb/ft
Dist. From PT. O, X_4 = 3.000 ft
Resisting Moment, RM4 = 6370 ft-lb/ft

Project: 2016.059.009 BY: rja 6/21/2016
Anchored Wingwall Design CHK:

Anchor #2 Stability Check

Driving Forces (Con't):

Collision Force ,CT =	0	lb/ft
Moment Arm, y_5 =	13.20	ft
Overturning Moment, DM5 =	0	ft-lb/ft

Resisting Forces (Con't):

Weight of Soil, W_B =	683	lb/ft
Dist. From PT. O, X_5 =	6.096	ft
Resisting Moment, RM5 =	4164	ft-lb/ft
Force P_{ABV} =	1177	lb/ft
Moment Arm, x6 =	7.95	ft
Resisting Moment, RM6 =	9363	ft-lb/ft
Force P_{BC1V} =	-189	lb/ft
Moment Arm, x7 =	6.56	ft
Resisting Moment, RM7 =	-1240	ft-lb/ft
Force P_{BC2V} =	-34	lb/ft
Moment Arm, x8 =	6.10	ft
Resisting Moment, RM8 =	-209	ft-lb/ft
Weight of Conc. Railing =	0	lb/ft
Moment Arm, x9 =	0.625	ft
Resisting Moment, RM9 =	0	ft-lb/ft

Location of Resultant Force:

	Str 1-a	Str 1-b	Str IV	Service	Extre-II
Overturning Moment (k-ft):	28.10	28.10	28.10	18.73	28.10
Resisting Moment (k-ft):	52.49	70.88	71.04	52.55	52.49
Vertical Loads (lb) =	12286	16637	17002	12432	12286
x (ft) =	1.99	2.57	2.53	2.72	1.99
Footing Length, B (ft) =	5.84	5.84	5.84	5.84	5.84
e (ft) =	0.93	0.35	0.39	0.20	0.93

(note: 80% of soil weight used for overturning resist.)

Overturning Check:

1/3 B (ft) =	1.95	1.95	1.95	1.95	1.95
Is resultant within middle 2/3?	OK	OK	OK	OK	OK

Bearing Check: AASHTO 11.6.3.2

Resist. Mom. for Bearing (k-ft):	63.50	85.74	85.90	63.56	63.50
Vertical Loads for Bearing (lb) =	14789	20017	20383	14936	14789
x for bearing (ft) =	2.39	2.88	2.84	3.00	2.39
e for bearing (ft) =	0.53	0.04	0.08	-0.08	0.53
Beff (ft) =	3.97	5.14	5.05	5.44	3.97
Bearing Pressure (psf) =	3725	3892	4036	2745	3725
Bearing Resistance, ϕq_{ult} =	15525	15525	15525	3000	15525
	OK	OK	OK	OK	OK

Sliding Check:

Sliding Force (lb/ft) =	4797	4797	4797	3198	4797
Sliding Resistance =	7182	9721	9899	8059	7182
	OK	OK	OK	OK	OK

Project: 2016.059.009
Anchored Wingwall Design

BY: rja 6/21/2016
CHK:

Anchor #3 Stability Check

Limit State	Str 1-a	Str 1-b	Str IV	Service	Extre-II
EH	1.50	1.50	1.50	1.00	1.50
LL/LS	1.75	1.75	0.00	1.00	0.50
EV	1.00	1.35	1.35	1.00	1.00
DC	0.90	1.25	1.50	1.00	0.90
EQ	0.00	0.00	0.00	0.00	0.00
CT	0.00	0.00	0.00	0.00	1.00
Resistance Factors					
Sliding	0.90	0.90	0.90	1.00	0.90
Bearing	0.45	0.45	0.45	0.33	0.45

Soil Properties:

Active Earth Coeff., $(Ka)_{AB}$ = 0.321
Active Earth Coeff., $(Ka)_{ABH}$ = 0.290
Active Earth Coeff., $(Ka)_{ABV}$ = 0.138
Active Earth Coeff., $(Ka)_{BC}$ = 0.105
Active Earth Coeff., $(Ka)_{BCH}$ = 0.100
Active Earth Coeff., $(Ka)_{BCV}$ = 0.031

Modification Factor = 1.00

Overturning Check:

Anchor Height = 10.7623 ft
Design Wall Height, H = 13.16 ft
Anchor Type = D
Anchor Length at Top, L_{top} = 6.12 ft
Anchor Length at Bot., L_{bot} = 4.01 ft

Back slope β1 = 23.41 deg.

Soil Pressure:

Horizontal (kah) :

Soil Pressure at A, σ_{LL} = 0 psf
Soil Pressure at B, σ_{Bab} = 391.70 psf
Soil Pressure at B, σ_{Bbc} = 135.40 psf
Soil Pressure at C, σ_{BOT} = 191.45 psf

Vertical (kav) :

Soil Pressure at A, σ_{LL} = 0 psf
Soil Pressure at B, σ_{Bab} = 186.83 psf
Soil Pressure at B, σ_{Bbc} = -41.40 psf
Soil Pressure at C, σ_{BOT} = -58.53 psf

Driving Forces:

Force $P_{Surcharge}$ = 0 lb/ft
Moment Arm, y_1 = 6.58 ft
Overturning Moment, DM1 = 0 ft-lb/ft
Force P_{ABH} = 1892 lb/ft
Moment Arm, y_2 = 6.72 ft
Overturning Moment, DM2 = 12719 ft-lb/ft
Force P_{BC1H} = 542 lb/ft
Moment Arm, y_3 = 1.50 ft
Overturning Moment, DM3 = 812 ft-lb/ft
Force P_{BC2H} = 112 lb/ft
Moment Arm, y_4 = 0.83 ft
Overturning Moment, DM4 = 93 ft-lb/ft

Resisting Forces:

Weight of Wall, Ww = 1345 lb/ft
Dist. From PT. O, X_1 = 0.42 ft
Resisting Moment, RM1 = 561 ft-lb/ft
Backslope Soil, I_A = 1135.74 lb/ft
Dist. From PT. O, X_2 = 4.91 ft
Resisting Moment, RM2 = 5581 ft-lb/ft
Soil Above Anchor, I_B = 6224 lb/ft
Dist. From PT. O, X_3 = 3.89 ft
Resisting Moment, RM3 = 24234 ft-lb/ft
Weight of Soil, II_A = 1633 lb/ft
Dist. From PT. O, X_4 = 2.500 ft
Resisting Moment, RM4 = 4083 ft-lb/ft

Project: 2016.059.009 BY: rja 6/23/2016
Anchored Wingwall Design CHK:

Anchor #4 Stability Check

Limit State	Str 1-a	Str 1-b	Str IV	Service	Extre-II
EH	1.50	1.50	1.50	1.00	1.50
LL/LS	1.75	1.75	0.00	1.00	0.50
EV	1.00	1.35	1.35	1.00	1.00
DC	0.90	1.25	1.50	1.00	0.90
EQ	0.00	0.00	0.00	0.00	0.00
CT	0.00	0.00	0.00	0.00	1.00
Resistance Factors					
Sliding	0.90	0.90	0.90	1.00	0.90
Bearing	0.45	0.45	0.45	0.33	0.45

Soil Properties:

Active Earth Coeff., $(Ka)_{AB}$ = 0.321
Active Earth Coeff., $(Ka)_{ABH}$ = 0.290
Active Earth Coeff., $(Ka)_{ABV}$ = 0.138
Active Earth Coeff., $(Ka)_{BC}$ = 0.105
Active Earth Coeff., $(Ka)_{BCH}$ = 0.100
Active Earth Coeff., $(Ka)_{BCV}$ = 0.031

Modification Factor = 1.00

Overturning Check:

Anchor Height = 9.70072 ft
Design Wall Height, H = 11.67 ft
Anchor Type = C
Anchor Length at Top, L_{top} = 5.12 ft
Anchor Length at Bot., L_{bot} = 3.01 ft

Back slope $\beta 1$ = 23.41 deg.

Soil Pressure:

Horizontal (kah) :

Soil Pressure at A, σ_{LL} = 0 psf
Soil Pressure at B, σ_{Bab} = 331.11 psf
Soil Pressure at B, σ_{Bbc} = 114.46 psf
Soil Pressure at C, σ_{BOT} = 170.50 psf

Vertical (kav) :

Soil Pressure at A, σ_{LL} = 0 psf
Soil Pressure at B, σ_{Bab} = 157.93 psf
Soil Pressure at B, σ_{Bbc} = -34.99 psf
Soil Pressure at C, σ_{BOT} = -52.13 psf

Driving Forces:

Force $P_{Surcharge}$ = 0 lb/ft
Moment Arm, y_1 = 5.83 ft
Overturning Moment, DM1 = 0 ft-lb/ft
Force P_{ABH} = 1352 lb/ft
Moment Arm, y_2 = 6.22 ft
Overturning Moment, DM2 = 8415 ft-lb/ft
Force P_{BC1H} = 458 lb/ft
Moment Arm, y_3 = 1.50 ft
Overturning Moment, DM3 = 687 ft-lb/ft
Force P_{BC2H} = 112 lb/ft
Moment Arm, y_4 = 0.83 ft
Overturning Moment, DM4 = 93 ft-lb/ft

Resisting Forces:

Weight of Wall, Ww = 1213 lb/ft
Dist. From PT. O, X_1 = 0.42 ft
Resisting Moment, RM1 = 505 ft-lb/ft
Backslope Soil, I_A = 794.97 lb/ft
Dist. From PT. O, X_2 = 4.25 ft
Resisting Moment, RM2 = 3377 ft-lb/ft
Soil Above Anchor, I_B = 4446 lb/ft
Dist. From PT. O, X_3 = 3.39 ft
Resisting Moment, RM3 = 15089 ft-lb/ft
Weight of Soil, II_A = 1143 lb/ft
Dist. From PT. O, X_4 = 2.000 ft
Resisting Moment, RM4 = 2287 ft-lb/ft

Project: 2016.059.009
Anchored Wingwall Design

BY: rja 6/23/2016
CHK:

Anchor #4 Stability Check

Driving Forces (Con't):

Collision Force ,CT =	0	lb/ft
Moment Arm, y_5 =	12.26	ft
Overturning Moment, DM5 =	0	ft-lb/ft

Resisting Forces (Con't):

Weight of Soil, II_B =	683 lb/ft
Dist. From PT. O, X_5 =	4.096 ft
Resisting Moment, RM5 =	2798 ft-lb/ft
Force P_{ABV} =	645 lb/ft
Moment Arm, x6 =	5.95 ft
Resisting Moment, RM6 =	3841 ft-lb/ft
Force P_{BC1V} =	-140 lb/ft
Moment Arm, x7 =	4.56 ft
Resisting Moment, RM7 =	-638 ft-lb/ft
Force P_{BC2V} =	-34 lb/ft
Moment Arm, x8 =	4.10 ft
Resisting Moment, RM8 =	-140 ft-lb/ft
Weight of Conc. Railing =	0 lb/ft
Moment Arm, x9 =	0.625 ft
Resisting Moment, RM9 =	0 ft-lb/ft

Location of Resultant Force:

	Str 1-a	Str 1-b	Str IV	Service	Extre-II
Overturning Moment (k-ft):	13.79	13.79	13.79	9.20	13.79
Resisting Moment (k-ft):	22.36	30.20	30.33	22.41	22.36
Vertical Loads (lb) =	7216	9784	10087	7337	7216
x (ft) =	1.19	1.68	1.64	1.80	1.19
Footing Length, B (ft) =	3.84	3.84	3.84	3.84	3.84
e (ft) =	0.73	0.24	0.28	0.12	0.73

(note: 80% of soil weight used for overturning resist.)

Overturning Check:

1/3 B (ft) =	1.28	1.28	1.28	1.28	1.28
Is resultant within middle 2/3?	OK	OK	OK	OK	OK

Bearing Check: AASHTO 11.6.3.2

Resist. Mom. for Bearing (k-ft):	27.07	36.56	36.68	27.12	27.07
Vertical Loads for Bearing (lb) =	8629	11692	11995	8750	8629
x for bearing (ft) =	1.54	1.95	1.91	2.05	1.54
e for bearing (ft) =	0.38	-0.03	0.01	-0.13	0.38
Beff (ft) =	2.37	3.35	3.28	3.60	2.37
Bearing Pressure (psf) =	3635	3486	3659	2430	3635
Bearing Resistance, ϕq_{ult} =	15525	15525	15525	3000	15525
	OK	OK	OK	OK	OK

Sliding Check:

Sliding Force (lb/ft) =	2883	2883	2883	1922	2883
Sliding Resistance =	4191	5678	5825	4722	4191
	OK	OK	OK	OK	OK

Project: 2016.059.009 BY: rja 6/23/2016
Anchored Wingwall Design CHK:

Connection Plate Design

Assumption: Wall is more likely to slide then to rotate.

Soil Properties:		**Load Factors:**	(overturning & sliding)	(Bearing Pressure)
At Rest Earth Coeff., $(Ko)_{AB}$ =	0.441	EH =	1.35	1.35
At Rest Earth Coeff., $(Ko)_{ABH}$ =	0.398	EV =	0.00	0
At Rest Earth Coeff., $(Ko)_{ABV}$ =	0.190	DC =	0.00	0
		LS =	0	0
		Live Load Surcharge =	0 ft	

Connection Plate Locations

Wall Height =	13.24	ft	
Wall Width for Plates =	0.00	ft	(Wall does not count on plates for stability)
Plate #3, y1 from Bot of Wall Stem =	4.50	ft	
Plate #2, y1 from Bot of Wall Stem =	1.50	ft	
Plate #1, y1 from Bot of Wall Stem =	0	ft	(input 0 if no plate #1)
Tributary Wall Height for Plate #3 =	10.24	ft	
Tributary Wall Height for Plate #2 =	3	ft	
Tributary Wall Height for Plate #1 =	0	ft	
Conn. Plate Force EH, Plate #3 =	0	lb	
Conn. Plate Force EH, Plate #2 =	0	lb	
Conn. Plate Force EH, Plate #1 =	0	lb	
Conn. Plate Force LS, Plate #3 =	0	lb	
Conn. Plate Force LS, Plate #2 =	0	lb	
Conn. Plate Force LS, Plate #1 =	0	lb	
Conn. Plate Force, Plate #3 Pu =	0	lb	
Conn. Plate Force, Plate #2 Pu =	0	lb	
Conn. Plate Force, Plate #1 Pu =	0	lb	
Controlling Pu =	0.0	kips	

Check Bolt / Insert Capacity

No. of Bolts Per Connection =	2		
Bolt Pu =	0.00	kips	
Bolt Pullout Capacity (ult) =	8.2875	kips	**OK**
Bolt Shear Capacity (ult) =	4.3875	kips	**OK**

Project: 2016.059.009
Anchored Wingwall Design

BY: rja 6/21/2016
CHK:

Check Bending in Wall - Vertical Bars

Assumptions: 1.) Wall stem is cantileverd from anchor.
2.) Use active earth pressure because wall is free to rotate.
3.) Critical Wall section will be at maximum horizontal load, at tallest anchor section.

Modification Factor = 1

Data:

H_{max} =	16.03	ft
h_{max} =	12.53	ft
LL surcharge, V_{LS} =	0.000	ksf
γ_{soil} =	0.140	ksf
K_a =	0.32	
δ =	25.5	
f'c =	4	ksi
fy =	60	ksi
0.65 < β1 < 0.85 =	0.85	(5.7.2.2)
Vertical Bars Size:	# 5	
Spacing:	5	in
Bar Cover:	2	in

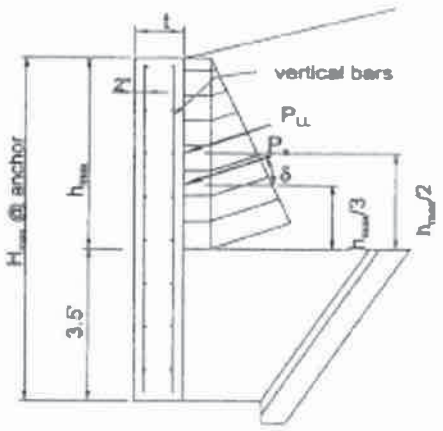

Find the horizontal load:

$$P_{soil} = (1/2)\gamma_S K_A h_{max}^2 (\cos\delta) = \quad 3.18 \text{ kip/ft}$$

$$P_{LS} = \sigma_{LS} K_A h_{max} (\cos\delta) = \quad 0.00 \text{ kip/ft}$$

CT = 0.00 kip/ft

Factored Loads:

	Str 1-a	Service	Extre-II
Mu	19.93	13.29	19.93
Vu	4.77	3.18	4.77

Moment Capacity:

As prov. :	0.736	in^2
d (in):	7.69	d = t - 2.0" cov. - 1/2 Bar Φ
a (in):	1.083	a=As*fy/(0.85*b*f'c)
c (in):	1.274	c=a/β1
ϕMn (kip-ft):	**23.68**	ϕMn = ϕ_M*As*fy*(d-a/2)/12

ϕ_M = 0.90

(ϕ_M=0.75+0.15[(ε_t-ε_{cl})/(ε_{tl}-ε_{cl})], 0.75min, 0.9max, 5.5.4.2.1-2)

ϕMn > Mu **OK!**

Shear Capacity Check

ϕVn (kip): **10.49** ϕVn = 0.90*β*√f'c*b*d

β = 2.00

ϕVn > Vu **OK!**

Check Min. Reinforcement:

fr = .24 * √f'c = 0.48 ksi (5.4.2.6)

S = $bt^2/6$ = 200 in3

Flex. cracking var. fac. (Other Con. Strs.) 1.60 γ_1

A615, Gr. 60 Reinforcement (Carbon steel) 0.67 γ_3

Mcr = γ_3 * [(γ_1 * fr)*S] = 8.58 kip-ft (5.7.3.3.2)

Mr = ϕMn > (lesser of Mcr or 1.33 Mu)

Mcr = 8.58 kip-ft

1.33 * Mu = 26.51 kip-ft

Mr = ϕMn = 23.68 kip-ft **OK**

Crack Control Check

Ma = 13.29 **kip-ft/ft**

$E_c = 1820 \bullet \sqrt{f'c}$ = 3640ksi

E_s = 29000ksi dc= 2.31in

γe= 0.75

$n = E_s / E_c$ = 7.97

ρn = 0.0635904

$k = \sqrt{2\rho n + \rho n^2} - \rho n$ = 0.299

$j = 1 - (k/3)$ = 0.900

$f_s = (M)/(A_s jd)$ = 31.28 ksi

Bs= 1+ac/(0.7*(n-ac))= 1.43

max spa ≤ [(700γe) / (βsfs)] - 2dc = 7 in **OK!**

Project: 2016.059.009
Anchored Wingwall Design

BY: rja 6/21/2
CHK:

Check Type F Anchor Attachment

Assumptions: 1.) Only top three connection bars, represented by T1, T2 & T3 in sketch below, will resist tension.
2.) Assume min. steel will control, design for 1.33 Mu (See ART. 5.7.3.3.2)

Anchor #1 $M_{D\,EH}$=	121.45	kip-ft	Anchor #1 $M_{D\,LS}$=	0.00	kip-ft
Anchor #2 $M_{D\,EH}$=	88.24	kip-ft	Anchor #2 $M_{D\,LS}$=	0.00	kip-ft
Anchor #3 $M_{D\,EH}$=	64.17	kip-ft	Anchor #3 $M_{D\,LS}$=	0.00	kip-ft
Anchor #1 $M_{D\,CT}$=	0.00	kip-ft	Anchor #1 1 Mod. Factor =	1.00	
Anchor #2 $M_{D\,CT}$=	0.00	kip-ft	Anchor #2 1 Mod. Factor =	1.00	
Anchor #3 $M_{D\,CT}$=	0.00	kip-ft	Anchor #3 1 Mod. Factor =	1.00	

Data:

f'c =	4	ksi
fy =	60	ksi
0.65 < β1 < 0.85 =	0.85	(5.7.2.2)
Connection Bars Size:	# 6	

Factored Loads:

	Str 1-a	Service	Extre-II
Anchor #1 Mu (k-ft) =	182.18	121.45	182.18
Anchor #2 Mu (k-ft) =	132.36	88.242	132.36
Anchor #3 Mu (k-ft) =	96.26	64.173	96.26
1.33 Mu =	242.30		

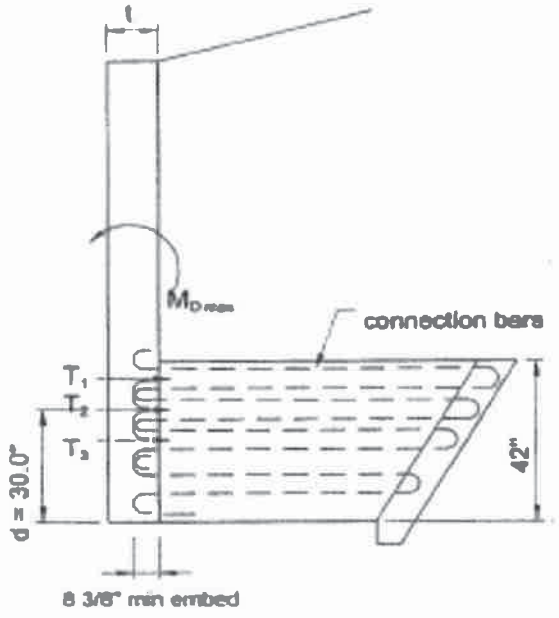

Moment Capacity:

As prov. :	2.651	in^2	(6 Bars)
d (in):	30.00		
b (in):	6.00		
a (in):	7.796	a=As*fy/(0.85*b*f'c)	
c (in):	9.172	c=a/β1	
ϕMn (kip-ft):	**311.35**	$\phi Mn = \phi_M * As * fy * (d-a/2)/12$	
ϕ_M =	0.90		

$(\phi_M = 0.75 + 0.15[(\varepsilon_t - \varepsilon_{cl})/(\varepsilon_{tl} - \varepsilon_{cl})]$, 0.75min, 0.9max, 5.5.4.

ϕMn > Mu **OK!**

Check Hook Development:

db (in): 0.750

ART 5.11.2.4

L_{hb} (in):	14.25	<-- Controls
or		
8db (in):	6.00	
or		
6in min:	6.00	

L_{dh} (in): 6.67 $=(0.8)L_{hb}$ x A,req'd/As,pro'c

Project: 2016.059.009 BY: rja 6/23/2016
Anchored Wingwall Design CHK:

Controling Wall	WW2	
Backfill Slope perp to road	4	:1
Wingwall Angle $\Theta_1 + \Theta_2$ =	20	deg (with respect to slope, not road)
Effective Backfill Slope	4.89	deg
Rise to level grade	14.31	ft
Stem projection above grade	3	in.
Surcharge	0	ft

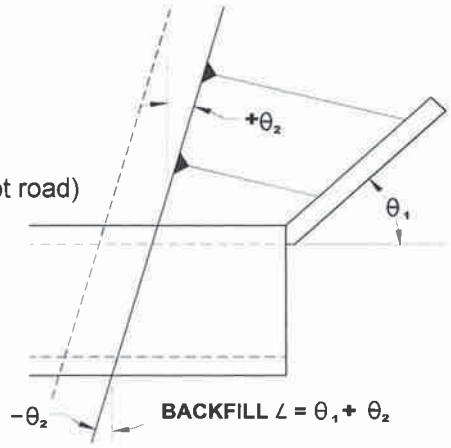

Wingwall Stability Check:

Wall Height (high) =	7.68 ft	ϕ_{AB} =	34
Wall Height (low) =	3.68 ft	θ_{AB} =	90
Wall Length =	9.58 ft	δ_{AB} =	26
Plate tributary width =	0.00 ft	$(Ka)_{AB}$ =	0.27
Unit Weight of Backfill, γ_{soil} =	140.00	ϕ_{BC} =	34
Unit Weight of Conc, γ_c =	150.00	θ_{BC} =	120
Adjusted Broken Backfill β'=	4.89 deg.	δ_{BC} =	17
Wall thickness =	10.00 in	$(Ka)_{BC}$ =	0.09
Bearing Resistance, ϕq_{ult} =	15525 psf (FACTORED)		
Friction Coefficient μ =	0.54 =0.8*TAN(ϕ)	Conc Railing Wt. =	0 lb/ft
Vehicle Collision Force =	0.00 k	Location wrt Stem F.F. =	0.625 ft
Distribution Length =	8.50 ft		
Location of Collision Force =	1.50 ft (Above top of wall)		

		Dist. To Anchor	Height at Anchor	Contributary width	Anchor type	Bearing Pressure		Stability Check
Anchor #1:	L1 =	2.50 ft	6.64 ft	5.00 ft	C	2305	OK	
Anchor #2:	L2 =	5.00 ft	4.55 ft	4.58 ft	C	1509	OK	
Anchor #3:	L3 =	0.00 ft	0.00 ft	0.00 ft		NA	NA	
Anchor #4:	L4 =	0.00 ft	0.00 ft	0.00 ft		NA	NA	
Anchor #5:	L5 =	0.00 ft	0.00 ft	0.00 ft		NA	NA	

Anchor Type Data

Anchor Type	Length at Bottom Anchor	Anchor End	Total	Length at Top Anchor	End	Total
	(in)	(in)	(in)	(in)	(in)	(in)
B	16	8.080	24.080	41.375	8.080	49.455
C	28	8.080	36.080	53.375	8.080	61.455
D	40	8.080	48.080	65.375	8.080	73.455
E	52	8.080	60.080	77.375	8.080	85.455
F	64	8.080	72.080	89.375	8.080	97.455
G	76	8.080	84.080	101.375	8.080	109.455
H	88	8.080	96.080	113.375	8.080	121.455

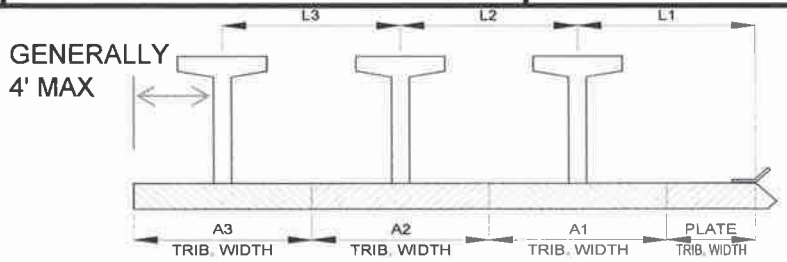

Project: 2016.059.009 BY: rja 6/23/2016
Anchored Wingwall Design CHK:

Anchor #1 Stability Check

Limit State	Str 1-a	Str 1-b	Str IV	Service	Extre-II
EH	1.50	1.50	1.50	1.00	1.50
LL/LS	1.75	1.75	0.00	1.00	0.50
EV	1.00	1.35	1.35	1.00	1.00
DC	0.90	1.25	1.50	1.00	0.90
EQ	0.00	0.00	0.00	0.00	0.00
CT	0.00	0.00	0.00	0.00	1.00
Resistance Factors					
Sliding	0.90	0.90	0.90	1.00	0.90
Bearing	0.45	0.45	0.45	0.33	0.45

Soil Properties:

Active Earth Coeff., $(Ka)_{AB}$ = 0.269
Active Earth Coeff., $(Ka)_{ABH}$ = 0.243
Active Earth Coeff., $(Ka)_{ABV}$ = 0.116
Active Earth Coeff., $(Ka)_{BC}$ = 0.092
Active Earth Coeff., $(Ka)_{BCH}$ = 0.088
Active Earth Coeff., $(Ka)_{BCV}$ = 0.027

Modification Factor = 1.00

Overturning Check:

Anchor Height = 6.63616 ft
Design Wall Height, H = 6.82 ft
Anchor Type = C
Anchor Length at Top, L_{top} = 5.12 ft
Anchor Length at Bot., L_{bot} = 3.01 ft

Back slope β1 = 4.89 deg.

Soil Pressure:

Horizontal (kah) :

Soil Pressure at A, σ_{LL} = 0 psf
Soil Pressure at B, σ_{Bab} = 112.95 psf
Soil Pressure at B, σ_{Bbc} = 41.08 psf
Soil Pressure at C, σ_{BOT} = 90.52 psf

Vertical (kav) :

Soil Pressure at A, σ_{LL} = 0 psf
Soil Pressure at B, σ_{Bab} = 53.88 psf
Soil Pressure at B, σ_{Bbc} = -12.56 psf
Soil Pressure at C, σ_{BOT} = -27.67 psf

Driving Forces:

Force $P_{Surcharge}$ = 0 lb/ft
Moment Arm, y_1 = 3.41 ft
Overturning Moment, DM1 = 0 ft-lb/ft
Force P_{ABH} = 188 lb/ft
Moment Arm, y_2 = 4.61 ft
Overturning Moment, DM2 = 865 ft-lb/ft
Force P_{BC1H} = 164 lb/ft
Moment Arm, y_3 = 1.50 ft
Overturning Moment, DM3 = 246 ft-lb/ft
Force P_{BC2H} = 99 lb/ft
Moment Arm, y_4 = 0.83 ft
Overturning Moment, DM4 = 82 ft-lb/ft

Resisting Forces:

Weight of Wall, Ww = 830 lb/ft
Dist. From PT. O, X_1 = 0.42 ft
Resisting Moment, RM1 = 346 ft-lb/ft
Backslope Soil, I_A = 156.98 lb/ft
Dist. From PT. O, X_2 = 4.25 ft
Resisting Moment, RM2 = 667 ft-lb/ft
Soil Above Anchor, I_B = 2249 lb/ft
Dist. From PT. O, X_3 = 3.39 ft
Resisting Moment, RM3 = 7631 ft-lb/ft
Weight of Soil, II_A = 1143 lb/ft
Dist. From PT. O, X_4 = 2.000 ft
Resisting Moment, RM4 = 2287 ft-lb/ft

Project: 2016.059.009 BY: rja 6/23/2016
Anchored Wingwall Design CHK:

Anchor #1 Stability Check

Driving Forces (Con't):

Collision Force ,CT =	0	lb/ft
Moment Arm, y_5 =	8.14	ft
Overturning Moment, DM5 =	0	ft-lb/ft

Resisting Forces (Con't):

Weight of Soil, W_B =	683	lb/ft
Dist. From PT. O, X_5 =	4.096	ft
Resisting Moment, RM5 =	2798	ft-lb/ft
Force P_{ABV} =	90	lb/ft
Moment Arm, x6 =	5.95	ft
Resisting Moment, RM6 =	533	ft-lb/ft
Force P_{BC1V} =	-50	lb/ft
Moment Arm, x7 =	4.56	ft
Resisting Moment, RM7 =	-229	ft-lb/ft
Force P_{BC2V} =	-30	lb/ft
Moment Arm, x8 =	4.10	ft
Resisting Moment, RM8 =	-124	ft-lb/ft
Weight of Conc. Railing =	0	lb/ft
Moment Arm, x9 =	0.625	ft
Resisting Moment, RM9 =	0	ft-lb/ft

Location of Resultant Force:

	Str 1-a	Str 1-b	Str IV	Service	Extre-II
Overturning Moment (k-ft):	1.79	1.79	1.79	1.19	1.79
Resisting Moment (k-ft):	11.20	15.13	15.21	11.23	11.20
Vertical Loads (lb) =	4141	5620	5827	4224	4141
x (ft) =	2.27	2.37	2.30	2.38	2.27
Footing Length, B (ft) =	3.84	3.84	3.84	3.84	3.84
e (ft) =	-0.35	-0.45	-0.38	-0.46	-0.35

(note: 80% of soil weight used for overturning resist.)

Overturning Check:

1/3 B (ft) =	1.28	1.28	1.28	1.28	1.28
Is resultant within middle 2/3?	OK	OK	OK	OK	OK

Bearing Check: AASHTO 11.6.3.2

Resist. Mom. for Bearing (k-ft):	13.87	18.74	18.83	13.91	13.87
Vertical Loads for Bearing (lb) =	4988	6762	6970	5070	4988
x for bearing (ft) =	2.42	2.51	2.44	2.51	2.42
e for bearing (ft) =	-0.50	-0.59	-0.52	-0.59	-0.50
Beff (ft) =	3.14	2.93	3.07	2.93	3.14
Bearing Pressure (psf) =	1590	2305	2268	1732	1590
Bearing Resistance, ϕq_{ult} =	15525	15525	15525	5000	15525
	OK	OK	OK	OK	OK

Sliding Check:

Sliding Force (lb/ft) =	676	676	676	451	676
Sliding Resistance =	2422	3284	3385	2736	2422
	OK	OK	OK	OK	OK

Project: 2016.059.009 BY: rja 6/23/2016
Anchored Wingwall Design CHK:

Anchor #1 w/FTG Stability Check

Limit State	Str 1-a	Str 1-b	Str IV	Service	Extre-II
EH	1.50	1.50	1.50	1.00	1.50
LL/LS	1.75	1.75	0.00	1.00	0.50
EV	1.00	1.35	1.35	1.00	1.00
DC	0.90	1.25	1.50	1.00	0.90
EQ	0.00	0.00	0.00	0.00	0.00
CT	0.00	0.00	0.00	0.00	1.00
Resistance Factors					
Sliding	0.90	0.90	0.90	1.00	0.90
Bearing	0.45	0.45	0.45	0.33	0.45

Soil Properties:

Active Earth Coeff., $(Ka)_{AB}$ = 0.269
Active Earth Coeff., $(Ka)_{ABH}$ = 0.243
Active Earth Coeff., $(Ka)_{ABV}$ = 0.116
Active Earth Coeff., $(Ka)_{BC}$ = 0.092
Active Earth Coeff., $(Ka)_{BCH}$ = 0.088
Active Earth Coeff., $(Ka)_{BCV}$ = 0.027

Modification Factor = 1.00

Footing Information:

Toe =	1.00	ft
Footing Stem Width(thickness) =	27	in
Footing Heel =	3.00	ft
Footing Width =	6.25	ft
WW Stem Offset wrt Ftg Stem	6.00	in
FTG Stem Height =	2.07	ft
FTG Thickness =	2.5	in
Back slope β1 =	4.89	deg.

Overturning Check:

Anchor Height = 6.63616 ft
Design Wall Height, H = 6.82 ft
Anchor Type = C
Anchor Length at Top, L_{top} = 5.12 ft
Anchor Length at Bot., L_{bot} = 3.01 ft

Soil Pressure:

Horizontal (kah) :

Soil Pressure at A, σ_{LL} = 0 psf
Soil Pressure at B, σ_{Bab} = 112.95 psf
Soil Pressure at B, σ_{Bbc} = 41.08 psf
Soil Pressure at C, σ_{BOT} = 90.52 psf
Soil Press. at top of ftg Stem = 231.89 psf
Soil Press. at Bottom of ftg = 309.31 psf

Vertical (kav) :

Soil Pressure at A, σ_{LL} = 0 psf
Soil Pressure at B, σ_{Bab} = 53.88 psf
Soil Pressure at B, σ_{Bbc} = -12.56 psf
Soil Pressure at C, σ_{BOT} = -27.67 psf
Soil Press. at top of ftg Stem = 110.61 psf
Soil Press. at Bottom of ftg = 147.53 psf

Driving Forces:

Force $P_{Surcharge}$ = 0 lb/ft
Moment Arm, y_1 = 3.41 ft
Overturning Moment, DM1 = 0 ft-lb/ft
Force P_{ABH} = 188 lb/ft
Moment Arm, y_2 = 4.61 ft
Overturning Moment, DM2 = 865 ft-lb/ft
Force P_{BC1H} = 164 lb/ft
Moment Arm, y_3 = 1.50 ft
Overturning Moment, DM3 = 246 ft-lb/ft
Force P_{BC2H} = 99 lb/ft
Moment Arm, y_4 = 0.83 ft
Overturning Moment, DM4 = 82 ft-lb/ft

Resisting Forces:

Weight of Wall, Ww = 830 lb/ft
Dist. From Ftg Toe, X_1 = 1.92 ft
Resisting Moment, RM1 = 1590 ft-lb/ft
Backslope Soil, I_A = 156.98 lb/ft
Dist. From Ftg Toe, X_2 = 5.75 ft
Resisting Moment, RM2 = 902 ft-lb/ft
Soil Above Anchor, I_B = 2249 lb/ft
Dist. From Ftg Toe, X_3 = 4.89 ft
Resisting Moment, RM3 = 11004 ft-lb/ft
Weight of Soil, II_A = 1143 lb/ft
Dist. From Ftg Toe, X_4 = 3.500 ft
Resisting Moment, RM4 = 4001 ft-lb/ft

Project: 2016.059.009 BY: rja 6/23/2016
Anchored Wingwall Design CHK:

Anchor #1 w/FTG Stability Check

Driving Forces (Con't):

Collision Force ,CT =	0	lb/ft
Moment Arm, y_5 =	8	ft
Overturning Moment, DM5 =	0	ft-lb/ft
Force P_{ftg} 1 =	528	lb/ft
Moment Arm, y_5 =	1.14	ft
Overturning Moment, DM5 =	602	ft-lb/ft
Force P_{ftg} 2 =	88	lb/ft
Moment Arm, y_6 =	0.76	ft
Overturning Moment, DM6 =	67	ft-lb/ft

Resisting Forces (Con't):

Weight of Soil, W_B =	683	lb/ft
Dist. From Ftg Toe, X_5 =	5.596	ft
Resisting Moment, RM5 =	3822	ft-lb/ft
Force P_{ABV} =	90	lb/ft
Moment Arm, x6 =	7.45	ft
Resisting Moment, RM6 =	668	ft-lb/ft
Force P_{BC1V} =	-50	lb/ft
Moment Arm, x7 =	6.06	ft
Resisting Moment, RM7 =	-304	ft-lb/ft
Force P_{BC2V} =	-30	lb/ft
Moment Arm, x8 =	5.60	ft
Resisting Moment, RM8 =	-169	ft-lb/ft
Weight of Conc. Railing =	0	lb/ft
Moment Arm, x9 =	0.625	ft
Resisting Moment, RM9 =	0	ft-lb/ft
Force P_{ftgV}=	294	lb/ft
Moment Arm, x10 =	6.25	ft
Resisting Moment, RM10 =	1838	ft-lb/ft
Footing Stem Weight =	698.625	lb/ft
Moment Arm, x11 =	2.13	ft
Resisting Moment, RM11 =	1485	ft-lb/ft
Footing Weight =	195.313	lb/ft
Moment Arm, x12 =	3.13	ft
Resisting Moment, RM12 =	610	ft-lb/ft
Soil Over Footing Heel Psoil =	869.4	lb/ft
Moment Arm, x13 =	4.75	ft
Resisting Moment, RM13 =	4130	ft-lb/ft

Location of Resultant Force:

	Str 1-a	Str 1-b	Str IV	Service	Extre-II
Overturning Moment (k-ft):	2.79	2.79	2.79	1.86	2.79
Resisting Moment (k-ft):	25.26	34.23	35.15	25.63	25.26
Vertical Loads (lb) =	6109	8308	8739	6281	6109
x (ft) =	3.68	3.78	3.70	3.78	3.68
Footing Length, B (ft) =	5.34	5.34	5.34	5.34	5.34
e (ft) =	-1.01	-1.11	-1.03	-1.11	-1.01

(note: 80% of soil weight used for overturning resist.)

Overturning Check:

1/3 B (ft) =	1.78	1.78	1.78	1.78	1.78
Is resultant within middle 2/3?	OK	OK	OK	OK	OK

Bearing Check: AASHTO 11.6.3.2

Resist. Mom. for Bearing (k-ft):	29.21	39.56	40.48	29.58	29.21
Vertical Loads for Bearing (lb) =	6956	9450	9881	7128	6956
x for bearing (ft) =	3.80	3.89	3.81	3.89	3.80
e for bearing (ft) =	-1.13	-1.22	-1.14	-1.22	-1.13
Beff (ft) =	3.32	3.11	3.27	3.11	3.32
Bearing Pressure (psf) =	2092	3037	3018	2290	2092
Bearing Resistance, ϕq_{ult} =	15525	15525	15525	5000	15525
	OK	OK	OK	OK	OK

Sliding Check:

Sliding Force (lb/ft) =	1601	1601	1601	1067	1601
Sliding Resistance =	3378	4589	4799	3846	3378
	OK	OK	OK	OK	OK

Project: 2016.059.009 BY: rja 6/23/2016
Anchored Wingwall Design CHK:

Connection Plate Design

Assumption: Wall is more likely to slide then to rotate.

Soil Properties:		**Load Factors:**	(overturning & sliding)	(Bearing Pressure)
At Rest Earth Coeff., $(Ko)_{AB}$ =	0.441	EH =	1.35	1.35
At Rest Earth Coeff., $(Ko)_{ABH}$ =	0.398	EV =	0.00	0
At Rest Earth Coeff., $(Ko)_{ABV}$ =	0.190	DC =	0.00	0
		LS =	0	0
		Live Load Surcharge =	0 ft	

Connection Plate Locations

Wall Height =	7.68	ft	
Wall Width for Plates =	0.00	ft	(Wall does not count on plates for stability)
Plate #3, y1 from Bot of Wall Stem =	4.50	ft	
Plate #2, y1 from Bot of Wall Stem =	1.50	ft	
Plate #1, y1 from Bot of Wall Stem =	0	ft	(input 0 if no plate #1)
Tributary Wall Height for Plate #3 =	4.68	ft	
Tributary Wall Height for Plate #2 =	3	ft	
Tributary Wall Height for Plate #1 =	0	ft	
Conn. Plate Force EH, Plate #3 =	0	lb	
Conn. Plate Force EH, Plate #2 =	0	lb	
Conn. Plate Force EH, Plate #1 =	0	lb	
Conn. Plate Force LS, Plate #3 =	0	lb	
Conn. Plate Force LS, Plate #2 =	0	lb	
Conn. Plate Force LS, Plate #1 =	0	lb	
Conn. Plate Force, Plate #3 Pu =	0	lb	
Conn. Plate Force, Plate #2 Pu =	0	lb	
Conn. Plate Force, Plate #1 Pu =	0	lb	
Controlling Pu =	0.0	kips	

Check Bolt / Insert Capacity

No. of Bolts Per Connection =	2		
Bolt Pu =	0.00	kips	
Bolt Pullout Capacity (ult) =	8.2875	kips	**OK**
Bolt Shear Capacity (ult) =	4.3875	kips	**OK**

Project: 2016.059.009 BY: rja 6/23/2016
Anchored Wingwall Design CHK:

Connection Plate Design

Check Bending of Plate

Moment Arm for Plate Bending =	4.5	in
Connection Plate Height(width) =	10	in
Connection Plate Thickness =	0.50	in
Connection Plate Yield Strength Fy =	36	ksi
Reduction Factor for Bending Phi =	0.9	

Factored Mu =	0.00	k-in	
S_{pl} =	0.42	in^3	
Plate Bending Stress Fult =	0.00	ksi	**OK**

Project: 2016.059.009 BY: rja 6/23/2016
Anchored Wingwall Design CHK:

Check Bending in Wall - Vertical Bars

Assumptions: 1.) Wall stem is cantileverd from anchor.
2.) Use active earth pressure because wall is free to rotate.
3.) Critical Wall section will be at maximum horizontal load, at tallest anchor section.

Modification Factor = 1

Data:

H_{max} =	6.82	ft
h_{max} =	3.32	ft
LL surcharge, V_{LS} =	0.000	ksf
γ_{soil} =	0.140	ksf
K_a =	0.27	
δ =	25.5	
f'c =	4	ksi
fy =	60	ksi
0.65 < β1 < 0.85 =	0.85	(5.7.2.2)
Vertical Bars Size:	# 5	
Spacing:	12	in
Bar Cover:	2	in

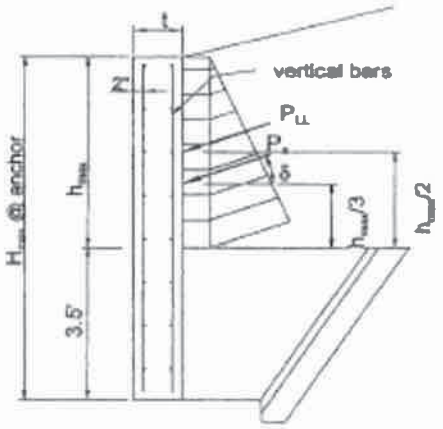

Find the horizontal load:

$$P_{soil} = (1/2)\gamma_S K_A h_{max}^2 (\cos\delta) = \quad 0.19 \text{ kip/ft}$$

$$P_{LS} = \sigma_{LS} K_A h_{max} (\cos\delta) = \quad 0.00 \text{ kip/ft}$$

CT = 0.00 kip/ft

Factored Loads:

	Str 1-a	Service	Extre-II
Mu	0.31	0.21	0.31
Vu	0.28	0.19	0.28

Moment Capacity:

As prov. :	0.307	in^2
d (in):	7.69	d = t - 2.0" cov. - 1/2 Bar Φ
a (in):	0.451	a=As*fy/(0.85*b*f'c)
c (in):	0.531	c=a/β1
ϕMn (kip-ft):	**10.30**	$\phi Mn = \phi_M * As * fy * (d - a/2)/12$
ϕ_M =	0.90	

(ϕ_M=0.75+0.15[(ε_t-ε_{cl})/(ε_{tl}-ε_{cl})], 0.75min, 0.9max, 5.5.4.2.1-2)

ϕMn > Mu **OK!**

Shear Capacity Check

ϕVn (kip): **10.49** $\phi Vn = 0.90 * \beta * \sqrt{f'c} * b * d$

β = 2.00

ϕVn > Vu **OK!**

Check Min. Reinforcement:

fr = .24 * √f'c = 0.48 ksi (5.4.2.6)

$S = bt^2/6$ = 200 in^3

Flex. cracking var. fac. (Other Con. Strs.) 1.60 γ_1

A615, Gr. 60 Reinforcement (Carbon steel) 0.67 γ_3

Mcr = γ_3 * [(γ_1 * fr)*S] = 8.58 kip-ft (5.7.3.3.2)

Mr = ϕMn > (lesser of Mcr or 1.33 Mu)

Mcr = 8.58 kip-ft

1.33 * Mu = 0.41 kip-ft

Mr = ϕMn = 10.30 kip-ft **OK**

Crack Control Check

Ma = 0.21 **kip-ft/ft**

$E_c = 1820 \bullet \sqrt{f'c}$ = 3640ksi

E_s = 29000ksi dc= 2.31in

γe= 0.75

$n = E_s / E_c$ = 7.97

ρn = 0.026496

$k = \sqrt{2\rho n + \rho n^2} - \rho n$ = 0.205

$j = 1 - (k/3)$ = 0.932

$f_s = (M)/(A_s jd)$ = 1.14 ksi

Bs= 1+dc/(0.7*(h-dc))= 1.43

max spa ≤ [(700γe) / (βsfs)] - 2dc = 319 in **OK!**

Project: 2016.059.009 BY: rja 6/23/2
Anchored Wingwall Design CHK:

Check Type C Anchor Attachment

Assumptions: 1.) Only top three connection bars, represented by T1, T2 & T3 in sketch below, will resist tension.
2.) Assume min. steel will control, design for 1.33 Mu (See ART. 5.7.3.3.2)

Anchor #1 $M_{D\,EH}$=	5.97	kip-ft	Anchor #1 $M_{D\,LS}$=	0.00	kip-ft
Anchor #2 $M_{D\,EH}$=	1.26	kip-ft	Anchor #2 $M_{D\,LS}$=	0.00	kip-ft
Anchor #3 $M_{D\,EH}$=	0.00	kip-ft	Anchor #3 $M_{D\,LS}$=	0.00	kip-ft
Anchor #1 $M_{D\,CT}$=	0.00	kip-ft	Anchor #1 1 Mod. Factor =	1.00	
Anchor #2 $M_{D\,CT}$=	0.00	kip-ft	Anchor #2 1 Mod. Factor =	1.00	
Anchor #3 $M_{D\,CT}$=	0.00	kip-ft	Anchor #3 1 Mod. Factor =	0.00	

Data:

f'c =	4	ksi
fy =	60	ksi
0.65 < β1 < 0.85 =	0.85	(5.7.2.2)
Connection Bars Size:	# 5	

Factored Loads:

	Str 1-a	Service	Extre-II
Anchor #1 Mu (k-ft) =	8.95	5.9698	8.9547
Anchor #2 Mu (k-ft) =	1.89	1.2626	1.8939
Anchor #3 Mu (k-ft) =	0.00	0	0
1.33 Mu =	11.91		

Moment Capacity:

As prov. :	1.227	in^2 (4 Bars)
d (in):	30.00	
b (in):	6.00	
a (in):	3.609	a=As*fy/(0.85*b*f'c)
c (in):	4.246	c=a/β1
ϕMn (kip-ft):	**155.70**	$\phi Mn = \phi_M * As * fy * (d-a/2)/12$
ϕ_M =	0.90	

$(\phi_M = 0.75 + 0.15[(\varepsilon_t - \varepsilon_{cl})/(\varepsilon_{tl} - \varepsilon_{cl})]$, 0.75min, 0.9max, 5.5.4.2

ϕMn > Mu **OK!**

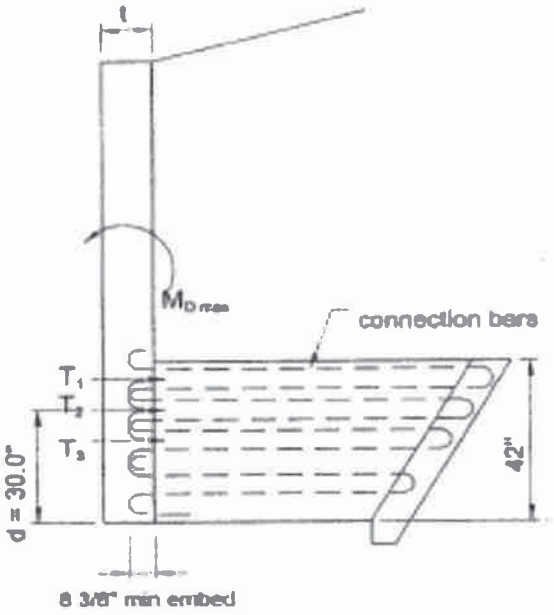

Check Hook Development:

db (in): 0.625

ART 5.11.2.4

L_{hb} (in):	11.88	<-- Controls
or		
8db (in):	5.00	
or		
6in min:	6.00	

L_{dh} (in): 6.00 =(0.8)L_{hb} x A,req'd/As,pro'd

Project: 2016.059.009 BY: rja 6/23/2016
Anchored Wingwall Design CHK:

Controling Wall	WW3	
Backfill Slope perp to road	4	:1
Wingwall Angle $\Theta_1 + \Theta_2$ =	25	deg (with respect to slope, not road)
Effective Backfill Slope	6.03	deg
Rise to level grade	12.56	ft
Stem projection above grade	3	in.
Surcharge	0	ft

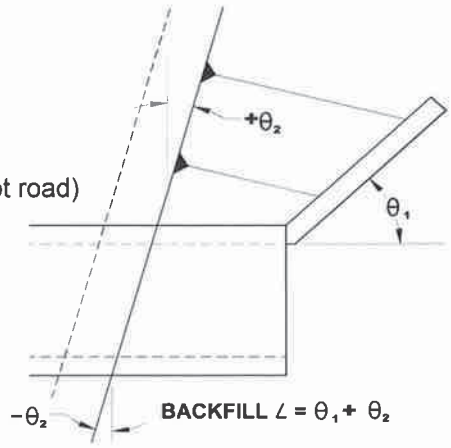

Wingwall Stability Check:

Wall Height (high) =	7.24 ft	ϕ_{AB} =	34
Wall Height (low) =	4.00 ft	θ_{AB} =	90
Wall Length =	6.93 ft	δ_{AB} =	26
Plate tributary width =	1.50 ft	$(Ka)_{AB}$ =	0.27
Unit Weight of Backfill, γ_{soil} =	140.00	ϕ_{BC} =	34
Unit Weight of Conc, γ_c =	150.00	θ_{BC} =	120
Adjusted Broken Backfill β'=	6.03 deg.	δ_{BC} =	17
Wall thickness =	10.00 in	$(Ka)_{BC}$ =	0.09
Bearing Resistance, ϕq_{ult} =	15525 psf (FACTORED)		
Friction Coefficient μ =	0.54 =0.8*TAN(ϕ)	Conc Railing Wt. =	0 lb/ft
Vehicle Collision Force =	0.00 k	Location wrt Stem F.F. =	0.625 ft
Distribution Length =	8.50 ft		
Location of Collision Force =	1.50 ft (Above top of wall)		

		Dist. To Anchor	Height at Anchor	Contributary width	Anchor type	Bearing Pressure		Stability Check
Anchor #1:	L1 =	4.67 ft	5.06 ft	5.75 ft	C	1656	OK	
Anchor #2:	L2 =	0.00 ft	0.00 ft	0.00 ft		NA	NA	
Anchor #3:	L3 =	0.00 ft	0.00 ft	0.00 ft		NA	NA	
Anchor #4:	L4 =	0.00 ft	0.00 ft	0.00 ft		NA	NA	
Anchor #5:	L5 =	0.00 ft	0.00 ft	0.00 ft		NA	NA	

Anchor Type Data

Anchor Type	Length at Bottom Anchor	Anchor End	Total	Length at Top Anchor	End	Total
	(in)	(in)	(in)	(in)	(in)	(in)
B	16	8.080	24.080	41.375	8.080	49.455
C	28	8.080	36.080	53.375	8.080	61.455
D	40	8.080	48.080	65.375	8.080	73.455
E	52	8.080	60.080	77.375	8.080	85.455
F	64	8.080	72.080	89.375	8.080	97.455
G	76	8.080	84.080	101.375	8.080	109.455
H	88	8.080	96.080	113.375	8.080	121.455

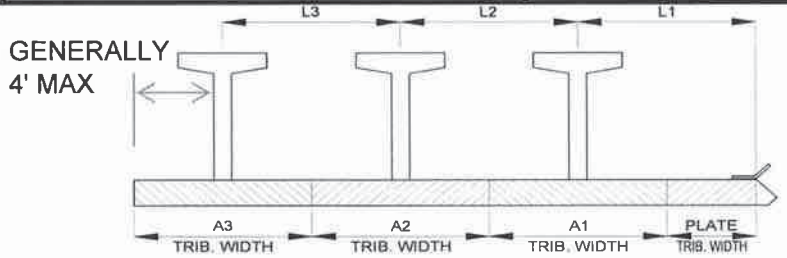

Project: 2016.059.009 BY: rja 6/23/2016
Anchored Wingwall Design CHK:

Anchor #1 Stability Check

Limit State	Str 1-a	Str 1-b	Str IV	Service	Extre-II
EH	1.50	1.50	1.50	1.00	1.50
LL/LS	1.75	1.75	0.00	1.00	0.50
EV	1.00	1.35	1.35	1.00	1.00
DC	0.90	1.25	1.50	1.00	0.90
EQ	0.00	0.00	0.00	0.00	0.00
CT	0.00	0.00	0.00	0.00	1.00
Resistance Factors					
Sliding	0.90	0.90	0.90	1.00	0.90
Bearing	0.45	0.45	0.45	0.33	0.45

Soil Properties:

Active Earth Coeff., $(Ka)_{AB}$ = 0.273
Active Earth Coeff., $(Ka)_{ABH}$ = 0.246
Active Earth Coeff., $(Ka)_{ABV}$ = 0.117
Active Earth Coeff., $(Ka)_{BC}$ = 0.093
Active Earth Coeff., $(Ka)_{BCH}$ = 0.089
Active Earth Coeff., $(Ka)_{BCV}$ = 0.027

Modification Factor = 0.96

Overturning Check:

Anchor Height = 5.05662 ft
Design Wall Height, H = 5.35 ft
Anchor Type = C
Anchor Length at Top, L_{top} = 5.12 ft
Anchor Length at Bot., L_{bot} = 3.01 ft

Back slope β1 = 6.03 deg.

Soil Pressure:

Horizontal (kah) :

Soil Pressure at A, σ_{LL} = 0 psf
Soil Pressure at B, σ_{Bab} = 63.68 psf
Soil Pressure at B, σ_{Bbc} = 23.05 psf
Soil Pressure at C, σ_{BOT} = 72.93 psf

Vertical (kav) :

Soil Pressure at A, σ_{LL} = 0 psf
Soil Pressure at B, σ_{Bab} = 30.37 psf
Soil Pressure at B, σ_{Bbc} = -7.05 psf
Soil Pressure at C, σ_{BOT} = -22.30 psf

Driving Forces:

Force $P_{Surcharge}$ = 0 lb/ft
Moment Arm, y_1 = 2.67 ft
Overturning Moment, DM1 = 0 ft-lb/ft
Force P_{ABH} = 59 lb/ft
Moment Arm, y_2 = 4.12 ft
Overturning Moment, DM2 = 242 ft-lb/ft
Force P_{BC1H} = 92 lb/ft
Moment Arm, y_3 = 1.50 ft
Overturning Moment, DM3 = 138 ft-lb/ft
Force P_{BC2H} = 100 lb/ft
Moment Arm, y_4 = 0.83 ft
Overturning Moment, DM4 = 83 ft-lb/ft

Resisting Forces:

Weight of Wall, Ww = 632 lb/ft
Dist. From PT. O, X_1 = 0.42 ft
Resisting Moment, RM1 = 263 ft-lb/ft
Backslope Soil, I_A = 193.97 lb/ft
Dist. From PT. O, X_2 = 4.25 ft
Resisting Moment, RM2 = 824 ft-lb/ft
Soil Above Anchor, I_B = 1116 lb/ft
Dist. From PT. O, X_3 = 3.39 ft
Resisting Moment, RM3 = 3788 ft-lb/ft
Weight of Soil, II_A = 1143 lb/ft
Dist. From PT. O, X_4 = 2.000 ft
Resisting Moment, RM4 = 2287 ft-lb/ft

Project: 2016.059.009 BY: rja 6/23/2016
Anchored Wingwall Design CHK:

Anchor #1 Stability Check

Driving Forces (Con't):

Collision Force ,CT =	0	lb/ft
Moment Arm, y_5 =	6.56	ft
Overturning Moment, DM5 =	0	ft-lb/ft

Resisting Forces (Con't):

Weight of Soil, II_B =	683	lb/ft
Dist. From PT. O, X_5 =	4.096	ft
Resisting Moment, RM5 =	2798	ft-lb/ft
Force P_{ABV} =	28	lb/ft
Moment Arm, x6 =	5.95	ft
Resisting Moment, RM6 =	167	ft-lb/ft
Force P_{BC1V} =	-28	lb/ft
Moment Arm, x7 =	4.56	ft
Resisting Moment, RM7 =	-129	ft-lb/ft
Force P_{BC2V} =	-31	lb/ft
Moment Arm, x8 =	4.10	ft
Resisting Moment, RM8 =	-125	ft-lb/ft
Weight of Conc. Railing =	0	lb/ft
Moment Arm, x9 =	0.625	ft
Resisting Moment, RM9 =	0	ft-lb/ft

Location of Resultant Force:

	Str 1-a	Str 1-b	Str IV	Service	Extre-II
Overturning Moment (k-ft):	0.70	0.70	0.70	0.46	0.70
Resisting Moment (k-ft):	7.57	10.23	10.30	7.60	7.57
Vertical Loads (lb) =	2940	3991	4149	3003	2940
x (ft) =	2.34	2.39	2.32	2.38	2.34
Footing Length, B (ft) =	3.84	3.84	3.84	3.84	3.84
e (ft) =	-0.42	-0.47	-0.40	-0.46	-0.42

(note: 80% of soil weight used for overturning resist.)

Overturning Check:

1/3 B (ft) =	1.28	1.28	1.28	1.28	1.28
Is resultant within middle 2/3?	OK	OK	OK	OK	OK

Bearing Check: AASHTO 11.6.3.2

Resist. Mom. for Bearing (k-ft):	9.43	12.74	12.80	9.46	9.43
Vertical Loads for Bearing (lb) =	3540	4801	4959	3603	3540
x for bearing (ft) =	2.47	2.51	2.44	2.50	2.47
e for bearing (ft) =	-0.55	-0.59	-0.52	-0.58	-0.55
Beff (ft) =	3.00	2.90	3.05	2.93	3.00
Bearing Pressure (psf) =	1180	1656	1626	1231	1180
Bearing Resistance, ϕq_{ult} =	15525	15525	15525	3000	15525
	OK	OK	OK	OK	OK

Sliding Check:

Sliding Force (lb/ft) =	376	376	376	251	376
Sliding Resistance =	1719	2331	2408	1944	1719
	OK	OK	OK	OK	OK

Project: 2016.059.009
Anchored Wingwall Design

BY: rja 6/23/2016
CHK:

Anchor #1 w/FTG Stability Check

Limit State	Str 1-a	Str 1-b	Str IV	Service	Extre-II
EH	1.50	1.50	1.50	1.00	1.50
LL/LS	1.75	1.75	0.00	1.00	0.50
EV	1.00	1.35	1.35	1.00	1.00
DC	0.90	1.25	1.50	1.00	0.90
EQ	0.00	0.00	0.00	0.00	0.00
CT	0.00	0.00	0.00	0.00	1.00
Resistance Factors					
Sliding	0.90	0.90	0.90	1.00	0.90
Bearing	0.45	0.45	0.45	0.33	0.45

Soil Properties:

Active Earth Coeff., $(Ka)_{AB}$ = 0.273
Active Earth Coeff., $(Ka)_{ABH}$ = 0.246
Active Earth Coeff., $(Ka)_{ABV}$ = 0.117
Active Earth Coeff., $(Ka)_{BC}$ = 0.093
Active Earth Coeff., $(Ka)_{BCH}$ = 0.089
Active Earth Coeff., $(Ka)_{BCV}$ = 0.027

Modification Factor = 0.96

Footing Information:

Toe =	1.00	ft
Footing Stem Width(thickness) =	27	in
Footing Heel =	3.00	ft
Footing Width =	6.25	ft
WW Stem Offset wrt Ftg Stem	6.00	in
FTG Stem Height =	3.51	ft
FTG Thickness =	2.5	in
Back slope β1 =	6.03	deg.

Overturning Check:

Anchor Height = 5.05662 ft
Design Wall Height, H = 5.35 ft
Anchor Type = C
Anchor Length at Top, L_{top} = 5.12 ft
Anchor Length at Bot., L_{bot} = 3.01 ft

Soil Pressure:

Horizontal (kah) :

Soil Pressure at A, σ_{LL} = 0 psf
Soil Pressure at B, σ_{Bab} = 63.68 psf
Soil Pressure at B, σ_{Bbc} = 23.05 psf
Soil Pressure at C, σ_{BOT} = 72.93 psf
Soil Press. at top of ftg Stem = 184.29 psf
Soil Press. at Bottom of ftg = 312.43 psf

Vertical (kav) :

Soil Pressure at A, σ_{LL} = 0 psf
Soil Pressure at B, σ_{Bab} = 30.37 psf
Soil Pressure at B, σ_{Bbc} = -7.05 psf
Soil Pressure at C, σ_{BOT} = -22.30 psf
Soil Press. at top of ftg Stem = 87.90 psf
Soil Press. at Bottom of ftg = 149.02 psf

Driving Forces:

Force $P_{Surcharge}$ = 0 lb/ft
Moment Arm, y_1 = 2.67 ft
Overturning Moment, DM1 = 0 ft-lb/ft
Force P_{ABH} = 59 lb/ft
Moment Arm, y_2 = 4.12 ft
Overturning Moment, DM2 = 242 ft-lb/ft
Force P_{BC1H} = 92 lb/ft
Moment Arm, y_3 = 1.50 ft
Overturning Moment, DM3 = 138 ft-lb/ft
Force P_{BC2H} = 100 lb/ft
Moment Arm, y_4 = 0.83 ft
Overturning Moment, DM4 = 83 ft-lb/ft

Resisting Forces:

Weight of Wall, Ww = 632 lb/ft
Dist. From Ftg Toe, X_1 = 1.92 ft
Resisting Moment, RM1 = 1211 ft-lb/ft
Backslope Soil, I_A = 193.97 lb/ft
Dist. From Ftg Toe, X_2 = 5.75 ft
Resisting Moment, RM2 = 1115 ft-lb/ft
Soil Above Anchor, I_B = 1116 lb/ft
Dist. From Ftg Toe, X_3 = 4.89 ft
Resisting Moment, RM3 = 5462 ft-lb/ft
Weight of Soil, II_A = 1143 lb/ft
Dist. From Ftg Toe, X_4 = 3.500 ft
Resisting Moment, RM4 = 4001 ft-lb/ft

Project: 2016.059.009 BY: rja 6/23/2016
Anchored Wingwall Design CHK:

Anchor #1 w/FTG Stability Check

Driving Forces (Con't):

Collision Force ,CT =	0	lb/ft
Moment Arm, y_5 =	7	ft
Overturning Moment, DM5 =	0	ft-lb/ft
Force P_{ftg} 1 =	685	lb/ft
Moment Arm, y_5 =	1.86	ft
Overturning Moment, DM5 =	1274	ft-lb/ft
Force P_{ftg} 2 =	238	lb/ft
Moment Arm, y_6 =	1.24	ft
Overturning Moment, DM6 =	295	ft-lb/ft

Resisting Forces (Con't):

Weight of Soil, W_B =	683	lb/ft
Dist. From Ftg Toe, X_5 =	5.596	ft
Resisting Moment, RM5 =	3822	ft-lb/ft
Force P_{ABV} =	28	lb/ft
Moment Arm, x6 =	7.45	ft
Resisting Moment, RM6 =	209	ft-lb/ft
Force P_{BC1V} =	-28	lb/ft
Moment Arm, x7 =	6.06	ft
Resisting Moment, RM7 =	-171	ft-lb/ft
Force P_{BC2V} =	-31	lb/ft
Moment Arm, x8 =	5.60	ft
Resisting Moment, RM8 =	-171	ft-lb/ft
Weight of Conc. Railing =	0	lb/ft
Moment Arm, x9 =	0.625	ft
Resisting Moment, RM9 =	0	ft-lb/ft
Force P_{ftgV}=	440	lb/ft
Moment Arm, x10 =	6.25	ft
Resisting Moment, RM10 =	2753	ft-lb/ft
Footing Stem Weight =	1184.63	lb/ft
Moment Arm, x11 =	2.13	ft
Resisting Moment, RM11 =	2517	ft-lb/ft
Footing Weight =	195.313	lb/ft
Moment Arm, x12 =	3.13	ft
Resisting Moment, RM12 =	610	ft-lb/ft
Soil Over Footing Heel Psoil =	1474.2	lb/ft
Moment Arm, x13 =	4.75	ft
Resisting Moment, RM13 =	7002	ft-lb/ft

Location of Resultant Force:

	Str 1-a	Str 1-b	Str IV	Service	Extre-II
Overturning Moment (k-ft):	3.05	3.05	3.05	2.03	3.05
Resisting Moment (k-ft):	24.13	32.73	33.81	24.56	24.13
Vertical Loads (lb) =	6013	8188	8691	6214	6013
x (ft) =	3.51	3.62	3.54	3.63	3.51
Footing Length, B (ft) =	5.34	5.34	5.34	5.34	5.34
e (ft) =	-0.84	-0.95	-0.87	-0.96	-0.84

(note: 80% of soil weight used for overturning resist.)

Overturning Check:

1/3 B (ft) =	1.78	1.78	1.78	1.78	1.78
Is resultant within middle 2/3?	OK	OK	OK	OK	OK

Bearing Check: AASHTO 11.6.3.2

Resist. Mom. for Bearing (k-ft):	26.88	36.45	37.53	27.32	26.88
Vertical Loads for Bearing (lb) =	6613	8998	9501	6814	6613
x for bearing (ft) =	3.60	3.71	3.63	3.71	3.60
e for bearing (ft) =	-0.93	-1.04	-0.96	-1.04	-0.93
Beff (ft) =	3.67	3.43	3.60	3.43	3.67
Bearing Pressure (psf) =	1803	2623	2639	1987	1803
Bearing Resistance, ϕq_{ult} =	15525	15525	15525	3000	15525
	OK	OK	OK	OK	OK

Sliding Check:

Sliding Force (lb/ft) =	1761	1761	1761	1174	1761
Sliding Resistance =	3212	4370	4614	3677	3212
	OK	OK	OK	OK	OK

Project: 2016.059.009 BY: rja 6/23/2016
Anchored Wingwall Design CHK:

Anchor #1 w/FTG Stability Check

Project: 2016.059.009 BY: rja 6/23/2016
Anchored Wingwall Design CHK:

Connection Plate Design

Assumption: Wall is more likely to slide then to rotate.

Soil Properties:		**Load Factors:**	(overturning & sliding)	(Bearing Pressure)
At Rest Earth Coeff., $(Ko)_{AB}$ =	0.441	EH =	1.35	1.35
At Rest Earth Coeff., $(Ko)_{ABH}$ =	0.398	EV =	0.00	0
At Rest Earth Coeff., $(Ko)_{ABV}$ =	0.190	DC =	0.00	0
		LS =	0	0
		Live Load Surcharge =	0 ft	

Connection Plate Locations

Wall Height =	7.24	ft
Wall Width for Plates =	1.50	ft
Plate #3, y1 from Bot of Wall Stem =	4.50	ft
Plate #2, y1 from Bot of Wall Stem =	1.50	ft
Plate #1, y1 from Bot of Wall Stem =	0	ft (input 0 if no plate #1)

Tributary Wall Height for Plate #3 =	4.24	ft
Tributary Wall Height for Plate #2 =	3	ft
Tributary Wall Height for Plate #1 =	0	ft
Conn. Plate Force EH, Plate #3 =	751	lb
Conn. Plate Force EH, Plate #2 =	1439	lb
Conn. Plate Force EH, Plate #1 =	0	lb
Conn. Plate Force LS, Plate #3 =	0	lb
Conn. Plate Force LS, Plate #2 =	0	lb
Conn. Plate Force LS, Plate #1 =	0	lb
Conn. Plate Force, Plate #3 Pu =	1014	lb
Conn. Plate Force, Plate #2 Pu =	1942	lb
Conn. Plate Force, Plate #1 Pu =	0	lb
Controlling Pu =	1.9	kips

Check Bolt / Insert Capacity

No. of Bolts Per Connection =	2		
Bolt Pu =	0.97	kips	
Bolt Pullout Capacity (ult) =	8.2875	kips	**OK**
Bolt Shear Capacity (ult) =	4.3875	kips	**OK**

Project: 2016.059.009 BY: rja 6/23/2016
Anchored Wingwall Design CHK:

Connection Plate Design

Check Bending of Plate

Moment Arm for Plate Bending =	4.5	in
Connection Plate Height(width) =	10	in
Connection Plate Thickness =	0.50	in
Connection Plate Yield Strength Fy =	36	ksi
Reduction Factor for Bending Phi =	0.9	

Factored Mu =	8.74	k-in	
S_{pl} =	0.42	in^3	
Plate Bending Stress Fult =	20.98	ksi	**OK**

FI-57, FI-59, FI-61: EXPANDED COIL, FERRULE INSERT

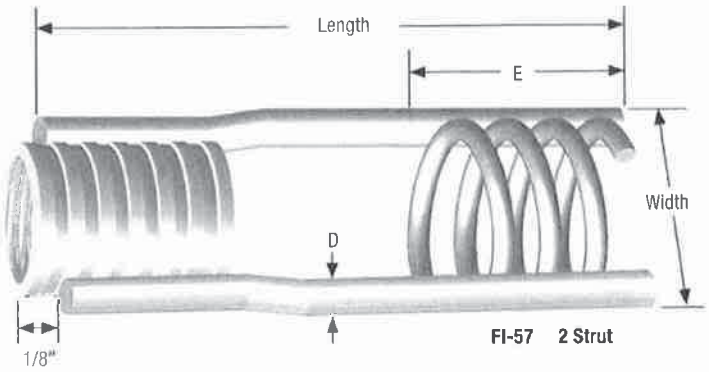

FI-57 2 Strut

The Expanded Coil, Ferrule Insert is a high-strength, highly versatile insert available for numerous precast concrete applications. It is available in 3/4", 1", 1-1/4" and 1-1/2" bolt diameters. The insert is constructed with a NC threaded ferrule, shaped struts (two, four or six depending on model) and an expanded wire coil. This efficient design increases the shear cone surface area thus increasing the load capacity of the insert. Insert is available in plated finish.

Standard inserts not designed for use with hot dip galvanized bolts.

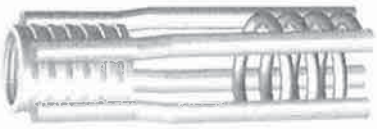

FI-59 4 Strut

FI-61 6 Strut

EXPANDED COIL, FERRULE INSERT DIMENSIONS AND LOAD CHART

Part Number	Bolt Diameter	Threads per Inch (N.C.)	Length	Width	# of Struts	Wire Diameter D	E	Insert Ultimate Mechanical Capacity (lbs)	In-Concrete Capacity, 3:1 SWL		
									Min. Edge Distance	Tension (lbs)	Shear (lbs)
FI5734412P	3/4"	10	4-1/2"	2-3/8"	2	0.375"	1-5/8"	17,670	14"	5,890	5,890
FI571512P	1"	8	5-1/2"	2-7/8"	2	0.440"	2-1/8"	24,300	16"	8,100	8,100
FI59114712P	1-1/4"	7	7-1/2"	3-1/8"	4	0.440"	2-7/8"	39,930	18"	13,310	13,310
FI61112912P	1-1/2"	6	9-1/2"	3-3/8"	6	0.440"	3-7/8"	56,040	22"	18,680	18,680

Safe Working Load is based on 3,000 psi concrete and insert setback 1/2" from the concrete surface.

FI-WW: WING WALL ANCHOR

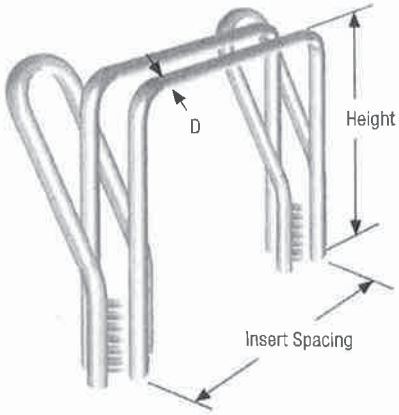

Standard inserts not designed for use with hot dip galvanized bolts.

Fabricated for a precast concrete retaining wall which forms a wing wall for a precast concrete culvert unit, the Wing Wall Anchor supports a concrete footer projecting laterally from the wing wall into the back-filled soil behind the wing wall. Insert is available in plated finish.

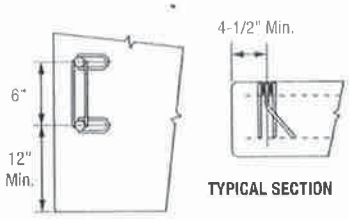

TYPICAL SECTION

WING WALL ANCHOR DIMENSIONS

Part Number	Bolt Diameter	Insert Spacing	Height	Wire Diameter D	In-Concrete Capacity, 3:1 SWL	
					Tension (lbs)	Shear (lbs)
FIWW166P	1"	6"	6"	0.375"	8,500	4,500
FIWW168P	1"	6"	8"	0.375"	8,500	4,500

Safe Working Load is based on 3,000 psi concrete and insert setback 1/2" from the concrete surface.

ULT LOAD PER BOLT = SWL * 3.0 S.F. / 2 BOLTS

Project: 2016.059.009 BY: rja 6/23/2016
Anchored Wingwall Design CHK:

Check Bending in Wall - Vertical Bars

Assumptions: 1.) Wall stem is cantileverd from anchor.
2.) Use active earth pressure because wall is free to rotate.
3.) Critical Wall section will be at maximum horizontal load, at tallest anchor section.

Modification Factor = 0.956522

Data:

H_{max} =	5.35	ft
h_{max} =	1.85	ft
LL surcharge, V_{LS} =	0.000	ksf
γ_{soil} =	0.140	ksf
K_a =	0.27	
δ =	25.5	
f'c =	4	ksi
fy =	60	ksi
0.65 < β1 < 0.85 =	0.85	(5.7.2.2)
Vertical Bars Size:	# 5	
Spacing:	12	in
Bar Cover:	2	in

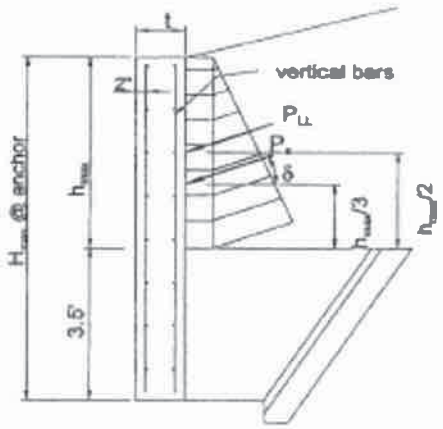

Find the horizontal load:

$$P_{soil} = (1/2)\gamma_S K_A h_{max}^2 (\cos\delta) =$$ 0.06 kip/ft

$$P_{LS} = \sigma_{LS} K_A h_{max} (\cos\delta) =$$ 0.00 kip/ft

CT = 0.00 kip/ft

Factored Loads:

	Str 1-a	Service	Extre-II
Mu	0.06	0.04	0.06
Vu	0.09	0.06	0.09

Moment Capacity:

As prov. :	0.307	in^2
d (in):	7.69	d = t - 2.0" cov. - 1/2 Bar Φ
a (in):	0.451	a=As*fy/(0.85*b*f'c)
c (in):	0.531	c=a/β1
ϕMn (kip-ft):	**10.30**	ϕMn = ϕ_M*As*fy*(d-a/2)/12

ϕ_M = 0.90

(ϕ_M=0.75+0.15[(ε_t-ε_{cl})/(ε_{tl}-ε_{cl})], 0.75min, 0.9max, 5.5.4.2.1-2)

ϕMn > Mu **OK!**

Shear Capacity Check

ϕVn (kip): **10.49** ϕVn = 0.90*β*√f'c*b*d

β = 2.00

ϕVn > Vu **OK!**

Check Min. Reinforcement:

fr = .24 * √f'c = 0.48 ksi (5.4.2.6)

S = $bt^2/6$ = 200 in3

Flex. cracking var. fac. (Other Con. Strs.) 1.60 γ_1

A615, Gr. 60 Reinforcement (Carbon steel) 0.67 γ_3

Mcr = γ_3 * [(γ_1 * fr)*S] = 8.58 kip-ft (5.7.3.3.2)

Mr = ϕMn > (lesser of Mcr or 1.33 Mu)

Mcr = 8.58 kip-ft

1.33 * Mu = 0.08 kip-ft

Mr = ϕMn = 10.30 kip-ft **OK**

Crack Control Check

Ma = 0.04 **kip-ft/ft**

$E_c = 1820 \bullet \sqrt{f'c}$ = 3640ksi

E_s = 29000ksi dc= 2.31in

γe= 0.75

$n = E_s / E_c$ = 7.97

ρn = 0.026496

$k = \sqrt{2\rho n + \rho n^2} - \rho n$ = 0.205

$j = 1 - (k/3)$ = 0.932

$f_s = (M)/(A_s jd)$ = 0.21 ksi

Bs= 1+ac/(0.7*(h-ac))= 1.43

max spa ≤ [(700γe) / (βsfs)] - 2dc = 1770 in **OK!**

Project: 2016.059.009 BY: rja 6/23/2
Anchored Wingwall Design CHK:

Check Type C Anchor Attachment

Assumptions: 1.) Only top three connection bars, represented by T1, T2 & T3 in sketch below, will resist tension.
2.) Assume min. steel will control, design for 1.33 Mu (See ART. 5.7.3.3.2)

Anchor #1 $M_{D\,EH}$=	2.67	kip-ft	Anchor #1 $M_{D\,LS}$=	0.00	kip-ft
Anchor #2 $M_{D\,EH}$=	0.00	kip-ft	Anchor #2 $M_{D\,LS}$=	0.00	kip-ft
Anchor #3 $M_{D\,EH}$=	0.00	kip-ft	Anchor #3 $M_{D\,LS}$=	0.00	kip-ft
Anchor #1 $M_{D\,CT}$=	0.00	kip-ft	Anchor #1 1 Mod. Factor =	0.96	
Anchor #2 $M_{D\,CT}$=	0.00	kip-ft	Anchor #2 1 Mod. Factor =	0.00	
Anchor #3 $M_{D\,CT}$=	0.00	kip-ft	Anchor #3 1 Mod. Factor =	0.00	

Data:

f'c =	4	ksi
fy =	60	ksi
0.65 < β1 < 0.85 =	0.85	(5.7.2.2)
Connection Bars Size:	# 5	

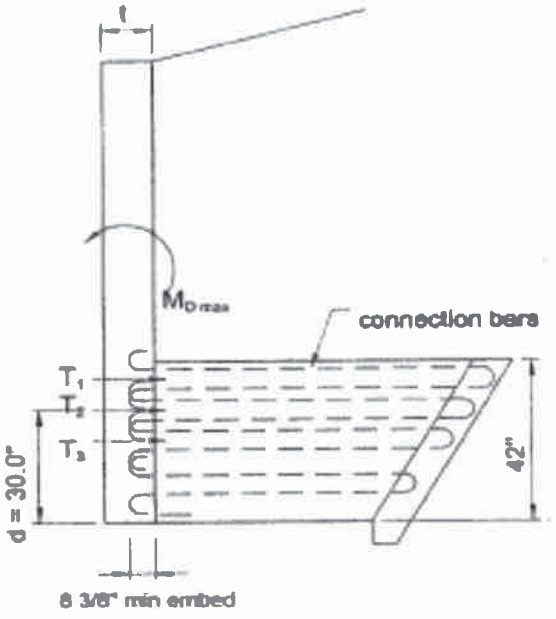

Factored Loads:

	Str 1-a	Service	Extre-II
Anchor #1 Mu (k-ft) =	4.18	2.7865	4.1798
Anchor #2 Mu (k-ft) =	0.00	0	0
Anchor #3 Mu (k-ft) =	0.00	0	0
1.33 Mu =	5.56		

Moment Capacity:

As prov. :	1.227	in^2 (4 Bars)
d (in):	30.00	
b (in):	6.00	
a (in):	3.609	a=As*fy/(0.85*b*f'c)
c (in):	4.246	c=a/β1
ϕMn (kip-ft):	**155.70**	ϕMn = ϕ_M*As*fy*(d-a/2)/12
ϕ_M =	0.90	

(ϕ_M=0.75+0.15[(ε_t-ε_{cl})/(ε_{tl}-ε_{cl})], 0.75min, 0.9max, 5.5.4.:

ϕMn > Mu **OK!**

Check Hook Development:

db (in): 0.625

ART 5.11.2.4

L_{hb} (in):	11.88	<-- Controls
or		
8db (in):	5.00	
or		
6in min:	6.00	

L_{dh} (in): 6.00 =(0.8)L_{hb} x A,req'd/As,pro'c

Project: 2016.059.009 BY: rja 6/23/2016
Anchored Wingwall Design CHK:

Controling Wall	WW4	
Backfill Slope perp to road	2	:1
Wingwall Angle $\Theta_1 + \Theta_2 =$	80	deg (with respect to slope, not road)
Effective Backfill Slope	26.22	deg
Rise to level grade	5.31	ft
Stem projection above grade	3	in.
Surcharge	0	ft

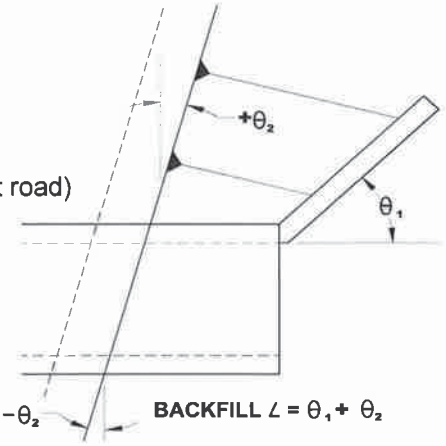

Wingwall Stability Check:

Wall Height (high) =	12.68 ft	ϕ_{AB} =	34
Wall Height (low) =	8.18 ft	θ_{AB} =	90
Wall Length =	29.78 ft	δ_{AB} =	26
Plate tributary width =	0.00 ft	$(Ka)_{AB}$ =	0.30
Unit Weight of Backfill, γ_{soil} =	140.00	ϕ_{BC} =	34
Unit Weight of Conc, γ_c =	150.00	θ_{BC} =	120
Adjusted Broken Backfill β'=	13.02 deg.	δ_{BC} =	17
Wall thickness =	10.00 in	$(Ka)_{BC}$ =	0.10
Bearing Resistance, ϕq_{ult} =	15525 psf (FACTORED)		
Friction Coefficient μ =	0.54 =0.8*TAN(ϕ)	Conc Railing Wt. =	0 lb/ft
Vehicle Collision Force =	0.00 k	Location wrt Stem F.F. =	0.625 ft
Distribution Length =	8.50 ft		
Location of Collision Force =	1.50 ft (Above top of wall)		

		Dist. To Anchor	Height at Anchor	Contributary width	Anchor type	Bearing Pressure		Stability Check
Anchor #1:	L1 =	2.50 ft	12.30 ft	5.00 ft	D	5929	OK	
Anchor #2:	L2 =	15.00 ft	10.04 ft	5.00 ft	C	4134	OK	
Anchor #3:	L3 =	0.00 ft	0.00 ft	0.00 ft		NA	NA	
Anchor #4:	L4 =	0.00 ft	0.00 ft	0.00 ft		NA	NA	
Anchor #5:	L5 =	0.00 ft	0.00 ft	0.00 ft		NA	NA	

Anchor Type Data

Anchor Type	Length at Bottom Anchor	Anchor End	Total	Length at Top Anchor	End	Total
	(in)	(in)	(in)	(in)	(in)	(in)
B	16	8.080	24.080	41.375	8.080	49.455
C	28	8.080	36.080	53.375	8.080	61.455
D	40	8.080	48.080	65.375	8.080	73.455
E	52	8.080	60.080	77.375	8.080	85.455
F	64	8.080	72.080	89.375	8.080	97.455
G	76	8.080	84.080	101.375	8.080	109.455
H	88	8.080	96.080	113.375	8.080	121.455

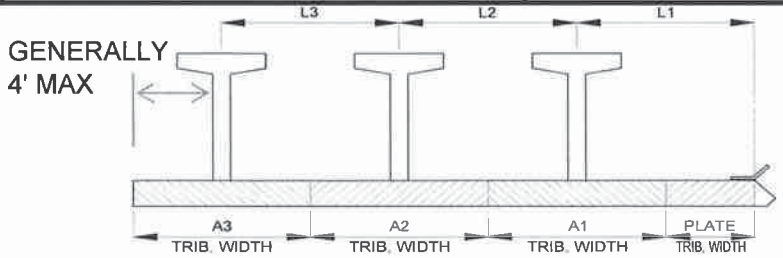

Project: 2016.059.009 BY: rja 6/23/2016
Anchored Wingwall Design CHK:

Anchor #1 Stability Check

Limit State	Str 1-a	Str 1-b	Str IV	Service	Extre-II
EH	1.50	1.50	1.50	1.00	1.50
LL/LS	1.75	1.75	0.00	1.00	0.50
EV	1.00	1.35	1.35	1.00	1.00
DC	0.90	1.25	1.50	1.00	0.90
EQ	0.00	0.00	0.00	0.00	0.00
CT	0.00	0.00	0.00	0.00	1.00
Resistance Factors					
Sliding	0.90	0.90	0.90	1.00	0.90
Bearing	0.45	0.45	0.45	0.33	0.45

Soil Properties:

Active Earth Coeff., $(Ka)_{AB}$ = 0.300
Active Earth Coeff., $(Ka)_{ABH}$ = 0.271
Active Earth Coeff., $(Ka)_{ABV}$ = 0.129
Active Earth Coeff., $(Ka)_{BC}$ = 0.100
Active Earth Coeff., $(Ka)_{BCH}$ = 0.095
Active Earth Coeff., $(Ka)_{BCV}$ = 0.029

Modification Factor = 1.00

Overturning Check:

Anchor Height = 12.3022 ft
Design Wall Height, H = 15.07 ft
Anchor Type = D
Anchor Length at Top, L_{top} = 6.12 ft
Anchor Length at Bot., L_{bot} = 4.01 ft

Back slope β1 = 26.22 deg.

Soil Pressure:

Horizontal (kah) :

Soil Pressure at A, σ_{LL} = 0 psf
Soil Pressure at B, σ_{Bab} = 438.94 psf
Soil Pressure at B, σ_{Bbc} = 154.21 psf
Soil Pressure at C, σ_{BOT} = 207.54 psf

Vertical (kav) :

Soil Pressure at A, σ_{LL} = 0 psf
Soil Pressure at B, σ_{Bab} = 209.36 psf
Soil Pressure at B, σ_{Bbc} = -47.15 psf
Soil Pressure at C, σ_{BOT} = -63.45 psf

Driving Forces:

Force $P_{Surcharge}$ = 0 lb/ft
Moment Arm, y_1 = 7.53 ft
Overturning Moment, DM1 = 0 ft-lb/ft
Force P_{ABH} = 2538 lb/ft
Moment Arm, y_2 = 7.36 ft
Overturning Moment, DM2 = 18671 ft-lb/ft
Force P_{BC1H} = 617 lb/ft
Moment Arm, y_3 = 1.50 ft
Overturning Moment, DM3 = 925 ft-lb/ft
Force P_{BC2H} = 107 lb/ft
Moment Arm, y_4 = 0.83 ft
Overturning Moment, DM4 = 89 ft-lb/ft

Resisting Forces:

Weight of Wall, Ww = 1538 lb/ft
Dist. From PT. O, X_1 = 0.42 ft
Resisting Moment, RM1 = 641 ft-lb/ft
Backslope Soil, I_A = 1291.52 lb/ft
Dist. From PT. O, X_2 = 4.91 ft
Resisting Moment, RM2 = 6347 ft-lb/ft
Soil Above Anchor, I_B = 7543 lb/ft
Dist. From PT. O, X_3 = 3.89 ft
Resisting Moment, RM3 = 29373 ft-lb/ft
Weight of Soil, II_A = 1633 lb/ft
Dist. From PT. O, X_4 = 2.500 ft
Resisting Moment, RM4 = 4083 ft-lb/ft

Project: 2016.059.009
Anchored Wingwall Design

BY: rja 6/23/2016
CHK:

Anchor #1 Stability Check

Driving Forces (Con't):

Collision Force ,CT =	0	lb/ft
Moment Arm, y_5 =	13.80	ft
Overturning Moment, DM5 =	0	ft-lb/ft

Resisting Forces (Con't):

Weight of Soil, II_B =	683	lb/ft
Dist. From PT. O, X_5 =	5.096	ft
Resisting Moment, RM5 =	3481	ft-lb/ft
Force P_{ABV} =	1211	lb/ft
Moment Arm, x6 =	6.95	ft
Resisting Moment, RM6 =	8420	ft-lb/ft
Force P_{BC1V} =	-189	lb/ft
Moment Arm, x7 =	5.56	ft
Resisting Moment, RM7 =	-1049	ft-lb/ft
Force P_{BC2V} =	-33	lb/ft
Moment Arm, x8 =	5.10	ft
Resisting Moment, RM8 =	-166	ft-lb/ft
Weight of Conc. Railing =	0	lb/ft
Moment Arm, x9 =	0.625	ft
Resisting Moment, RM9 =	0	ft-lb/ft

Location of Resultant Force:

	Str 1-a	Str 1-b	Str IV	Service	Extre-II
Overturning Moment (k-ft):	29.53	29.53	29.53	19.69	29.53
Resisting Moment (k-ft):	42.41	57.28	57.44	42.47	42.41
Vertical Loads (lb) =	11295	15301	15686	11448	11295
x (ft) =	1.14	1.81	1.78	1.99	1.14
Footing Length, B (ft) =	4.84	4.84	4.84	4.84	4.84
e (ft) =	1.28	0.61	0.64	0.43	1.28

(note: 80% of soil weight used for overturning resist.)

Overturning Check:

1/3 B (ft) =	1.61	1.61	1.61	1.61	1.61
Is resultant within middle 2/3?	OK	OK	OK	OK	OK

Bearing Check: AASHTO 11.6.3.2

Resist. Mom. for Bearing (k-ft):	51.07	68.96	69.12	51.13	51.07
Vertical Loads for Bearing (lb) =	13525	18312	18697	13679	13525
x for bearing (ft) =	1.59	2.15	2.12	2.30	1.59
e for bearing (ft) =	0.83	0.27	0.30	0.12	0.83
Beff (ft) =	2.28	3.63	3.56	3.98	2.28
Bearing Pressure (psf) =	5929	5049	5254	3436	5929
Bearing Resistance, ϕq_{ult} =	15525	15525	15525	5000	15525
	OK	OK	OK	OK	OK

Sliding Check:

Sliding Force (lb/ft) =	4893	4893	4893	3262	4893
Sliding Resistance =	6568	8893	9080	7381	6568
	OK	OK	OK	OK	OK

Project: 2016.059.009
Anchored Wingwall Design

BY: rja 6/23/2016
CHK:

Anchor #1 w/FTG Stability Check

Limit State	Str 1-a	Str 1-b	Str IV	Service	Extre-II
EH	1.50	1.50	1.50	1.00	1.50
LL/LS	1.75	1.75	0.00	1.00	0.50
EV	1.00	1.35	1.35	1.00	1.00
DC	0.90	1.25	1.50	1.00	0.90
EQ	0.00	0.00	0.00	0.00	0.00
CT	0.00	0.00	0.00	0.00	1.00
Resistance Factors					
Sliding	0.90	0.90	0.90	1.00	0.90
Bearing	0.45	0.45	0.45	0.33	0.45

Soil Properties:

Active Earth Coeff., $(Ka)_{AB}$ = 0.300
Active Earth Coeff., $(Ka)_{ABH}$ = 0.271
Active Earth Coeff., $(Ka)_{ABV}$ = 0.129
Active Earth Coeff., $(Ka)_{BC}$ = 0.100
Active Earth Coeff., $(Ka)_{BCH}$ = 0.095
Active Earth Coeff., $(Ka)_{BCV}$ = 0.029

Modification Factor = 1.00

Overturning Check:

Anchor Height = 12.3022 ft
Design Wall Height, H = 15.07 ft
Anchor Type = D
Anchor Length at Top, L_{top} = 6.12 ft
Anchor Length at Bot., L_{bot} = 4.01 ft

Footing Information:

Toe =	1.00	ft
Footing Stem Width(thickness) =	27	in
Footing Heel =	3.00	ft
Footing Width =	6.25	ft
WW Stem Offset wrt Ftg Stem	6.00	in
FTG Stem Height =	2.07	ft
FTG Thickness =	2.5	in
Back slope β1 =	26.22	deg.

Soil Pressure:

Horizontal (kah) :

Soil Pressure at A, σ_{LL} = 0 psf
Soil Pressure at B, σ_{Bab} = 438.94 psf
Soil Pressure at B, σ_{Bbc} = 154.21 psf
Soil Pressure at C, σ_{BOT} = 207.54 psf
Soil Press. at top of ftg Stem = 571.76 psf
Soil Press. at Bottom of ftg = 658.22 psf

Vertical (kav) :

Soil Pressure at A, σ_{LL} = 0 psf
Soil Pressure at B, σ_{Bab} = 209.36 psf
Soil Pressure at B, σ_{Bbc} = -47.15 psf
Soil Pressure at C, σ_{BOT} = -63.45 psf
Soil Press. at top of ftg Stem = 272.71 psf
Soil Press. at Bottom of ftg = 313.95 psf

Driving Forces:

Force $P_{Surcharge}$ = 0 lb/ft
Moment Arm, y_1 = 7.53 ft
Overturning Moment, DM1 = 0 ft-lb/ft
Force P_{ABH} = 2538 lb/ft
Moment Arm, y_2 = 7.36 ft
Overturning Moment, DM2 = 18671 ft-lb/ft
Force P_{BC1H} = 617 lb/ft
Moment Arm, y_3 = 1.50 ft
Overturning Moment, DM3 = 925 ft-lb/ft
Force P_{BC2H} = 107 lb/ft
Moment Arm, y_4 = 0.83 ft
Overturning Moment, DM4 = 89 ft-lb/ft

Resisting Forces:

Weight of Wall, Ww = 1538 lb/ft
Dist. From Ftg Toe, X_1 = 1.92 ft
Resisting Moment, RM1 = 2947 ft-lb/ft
Backslope Soil, I_A = 1291.52 lb/ft
Dist. From Ftg Toe, X_2 = 6.41 ft
Resisting Moment, RM2 = 8284 ft-lb/ft
Soil Above Anchor, I_B = 7543 lb/ft
Dist. From Ftg Toe, X_3 = 5.39 ft
Resisting Moment, RM3 = 40688 ft-lb/ft
Weight of Soil, II_A = 1633 lb/ft
Dist. From Ftg Toe, X_4 = 4.000 ft
Resisting Moment, RM4 = 6533 ft-lb/ft

Project: 2016.059.009 BY: rja 6/23/2016
Anchored Wingwall Design CHK:

Anchor #1 w/FTG Stability Check

Driving Forces (Con't):

Collision Force ,CT =	0	lb/ft
Moment Arm, y_5 =	14	ft
Overturning Moment, DM5 =	0	ft-lb/ft
Force P_{ftg} 1 =	1303	lb/ft
Moment Arm, y_5 =	1.14	ft
Overturning Moment, DM5 =	1484	ft-lb/ft
Force P_{ftg} 2 =	98	lb/ft
Moment Arm, y_6 =	0.76	ft
Overturning Moment, DM6 =	75	ft-lb/ft

Resisting Forces (Con't):

Weight of Soil, II_B =	683	lb/ft
Dist. From Ftg Toe, X_5 =	6.596	ft
Resisting Moment, RM5 =	4505	ft-lb/ft
Force P_{ABV} =	1211	lb/ft
Moment Arm, x6 =	8.45	ft
Resisting Moment, RM6 =	10237	ft-lb/ft
Force P_{BC1V} =	-189	lb/ft
Moment Arm, x7 =	7.06	ft
Resisting Moment, RM7 =	-1332	ft-lb/ft
Force P_{BC2V} =	-33	lb/ft
Moment Arm, x8 =	6.60	ft
Resisting Moment, RM8 =	-215	ft-lb/ft
Weight of Conc. Railing =	0	lb/ft
Moment Arm, x9 =	0.625	ft
Resisting Moment, RM9 =	0	ft-lb/ft
Force P_{ftgV}=	668	lb/ft
Moment Arm, x10 =	6.25	ft
Resisting Moment, RM10 =	4177	ft-lb/ft
Footing Stem Weight =	698.625	lb/ft
Moment Arm, x11 =	2.13	ft
Resisting Moment, RM11 =	1485	ft-lb/ft
Footing Weight =	195.313	lb/ft
Moment Arm, x12 =	3.13	ft
Resisting Moment, RM12 =	610	ft-lb/ft
Soil Over Footing Heel Psoil =	869.4	lb/ft
Moment Arm, x13 =	4.75	ft
Resisting Moment, RM13 =	4130	ft-lb/ft

Location of Resultant Force:

	Str 1-a	Str 1-b	Str IV	Service	Extre-II
Overturning Moment (k-ft):	31.87	31.87	31.87	21.24	31.87
Resisting Moment (k-ft):	69.54	94.06	95.32	70.05	69.54
Vertical Loads (lb) =	13637	18495	19103	13880	13637
x (ft) =	2.76	3.36	3.32	3.52	2.76
Footing Length, B (ft) =	6.34	6.34	6.34	6.34	6.34
e (ft) =	0.41	-0.19	-0.15	-0.35	0.41

(note: 80% of soil weight used for overturning resist.)

Overturning Check:

1/3 B (ft) =	2.11	2.11	2.11	2.11	2.11
Is resultant within middle 2/3?	OK	OK	OK	OK	OK

Bearing Check: AASHTO 11.6.3.2

Resist. Mom. for Bearing (k-ft):	81.55	110.26	111.52	82.05	81.55
Vertical Loads for Bearing (lb) =	15867	21506	22113	16110	15867
x for bearing (ft) =	3.13	3.65	3.60	3.77	3.13
e for bearing (ft) =	0.04	-0.48	-0.43	-0.60	0.04
Beff (ft) =	5.53	5.95	6.04	5.65	5.53
Bearing Pressure (psf) =	2871	3612	3663	2852	2871
Bearing Resistance, ϕq_{ult} =	15525	15525	15525	5000	15525
	OK	OK	OK	OK	OK

Sliding Check:

Sliding Force (lb/ft) =	6995	6995	6995	4663	6995
Sliding Resistance =	7706	10444	10739	8693	7706
	OK	OK	OK	OK	OK

Project: 2016.059.009 BY: rja 6/23/2016
Anchored Wingwall Design CHK:

Anchor #2 Stability Check

Limit State	Str 1-a	Str 1-b	Str IV	Service	Extre-II
EH	1.50	1.50	1.50	1.00	1.50
LL/LS	1.75	1.75	0.00	1.00	0.50
EV	1.00	1.35	1.35	1.00	1.00
DC	0.90	1.25	1.50	1.00	0.90
EQ	0.00	0.00	0.00	0.00	0.00
CT	0.00	0.00	0.00	0.00	1.00
Resistance Factors					
Sliding	0.90	0.90	0.90	1.00	0.90
Bearing	0.45	0.45	0.45	0.33	0.45

Soil Properties:

Active Earth Coeff., $(Ka)_{AB}$ = 0.300
Active Earth Coeff., $(Ka)_{ABH}$ = 0.271
Active Earth Coeff., $(Ka)_{ABV}$ = 0.129
Active Earth Coeff., $(Ka)_{BC}$ = 0.100
Active Earth Coeff., $(Ka)_{BCH}$ = 0.095
Active Earth Coeff., $(Ka)_{BCV}$ = 0.029

Modification Factor = 1.00

Overturning Check:

Anchor Height = 10.0356 ft
Design Wall Height, H = 12.31 ft
Anchor Type = C
Anchor Length at Top, L_{top} = 5.12 ft
Anchor Length at Bot., L_{bot} = 3.01 ft

Back slope $\beta 1$ = 26.22 deg.

Soil Pressure:

Horizontal (kah) :

Soil Pressure at A, σ_{LL} = 0 psf
Soil Pressure at B, σ_{Bab} = 334.23 psf
Soil Pressure at B, σ_{Bbc} = 117.42 psf
Soil Pressure at C, σ_{BOT} = 170.75 psf

Vertical (kav) :

Soil Pressure at A, σ_{LL} = 0 psf
Soil Pressure at B, σ_{Bab} = 159.42 psf
Soil Pressure at B, σ_{Bbc} = -35.90 psf
Soil Pressure at C, σ_{BOT} = -52.20 psf

Driving Forces:

Force $P_{Surcharge}$ = 0 lb/ft
Moment Arm, y_1 = 6.15 ft
Overturning Moment, DM1 = 0 ft-lb/ft
Force P_{ABH} = 1472 lb/ft
Moment Arm, y_2 = 6.44 ft
Overturning Moment, DM2 = 9472 ft-lb/ft
Force P_{BC1H} = 470 lb/ft
Moment Arm, y_3 = 1.50 ft
Overturning Moment, DM3 = 705 ft-lb/ft
Force P_{BC2H} = 107 lb/ft
Moment Arm, y_4 = 0.83 ft
Overturning Moment, DM4 = 89 ft-lb/ft

Resisting Forces:

Weight of Wall, Ww = 1254 lb/ft
Dist. From PT. O, X_1 = 0.42 ft
Resisting Moment, RM1 = 523 ft-lb/ft
Backslope Soil, I_A = 904.01 lb/ft
Dist. From PT. O, X_2 = 4.25 ft
Resisting Moment, RM2 = 3840 ft-lb/ft
Soil Above Anchor, I_B = 4686 lb/ft
Dist. From PT. O, X_3 = 3.39 ft
Resisting Moment, RM3 = 15904 ft-lb/ft
Weight of Soil, II_A = 1143 lb/ft
Dist. From PT. O, X_4 = 2.000 ft
Resisting Moment, RM4 = 2287 ft-lb/ft

Project: 2016.059.009 BY: rja 6/23/2016
Anchored Wingwall Design CHK:

Anchor #2 Stability Check

Driving Forces (Con't):

Collision Force ,CT =	0	lb/ft
Moment Arm, y_5 =	11.54	ft
Overturning Moment, DM5 =	0	ft-lb/ft

Resisting Forces (Con't):

Weight of Soil, II_B =	683 lb/ft
Dist. From PT. O, X_5 =	4.096 ft
Resisting Moment, RM5 =	2798 ft-lb/ft
Force P_{ABV} =	702 lb/ft
Moment Arm, x6 =	5.95 ft
Resisting Moment, RM6 =	4180 ft-lb/ft
Force P_{BC1V} =	-144 lb/ft
Moment Arm, x7 =	4.56 ft
Resisting Moment, RM7 =	-655 ft-lb/ft
Force P_{BC2V} =	-33 lb/ft
Moment Arm, x8 =	4.10 ft
Resisting Moment, RM8 =	-134 ft-lb/ft
Weight of Conc. Railing =	0 lb/ft
Moment Arm, x9 =	0.625 ft
Resisting Moment, RM9 =	0 ft-lb/ft

Location of Resultant Force:

	Str 1-a	Str 1-b	Str IV	Service	Extre-II
Overturning Moment (k-ft):	15.40	15.40	15.40	10.27	15.40
Resisting Moment (k-ft):	23.72	32.05	32.18	23.78	23.72
Vertical Loads (lb) =	7588	10287	10601	7713	7588
x (ft) =	1.10	1.62	1.58	1.75	1.10
Footing Length, B (ft) =	3.84	3.84	3.84	3.84	3.84
e (ft) =	0.82	0.30	0.34	0.17	0.82

(note: 80% of soil weight used for overturning resist.)

Overturning Check:

1/3 B (ft) =	1.28	1.28	1.28	1.28	1.28
Is resultant within middle 2/3?	OK	OK	OK	OK	OK

Bearing Check: AASHTO 11.6.3.2

Resist. Mom. for Bearing (k-ft):	28.69	38.75	38.88	28.74	28.69
Vertical Loads for Bearing (lb) =	9071	12290	12603	9197	9071
x for bearing (ft) =	1.47	1.90	1.86	2.01	1.47
e for bearing (ft) =	0.45	0.02	0.06	-0.09	0.45
Beff (ft) =	2.19	3.24	3.17	3.50	2.19
Bearing Pressure (psf) =	4134	3797	3982	2625	4134
Bearing Resistance, ϕq_{ult} =	15525	15525	15525	5000	15525
	OK	OK	OK	OK	OK

Sliding Check:

Sliding Force (lb/ft) =	3072	3072	3072	2048	3072
Sliding Resistance =	4405	5969	6121	4962	4405
	OK	OK	OK	OK	OK

Project: 2016.059.009 BY: rja 6/23/2016
Anchored Wingwall Design CHK:

Connection Plate Design

Assumption: Wall is more likely to slide then to rotate.

Soil Properties:		**Load Factors:**	(overturning & sliding)	(Bearing Pressure)
At Rest Earth Coeff., $(Ko)_{AB}$ =	0.441	EH =	1.35	1.35
At Rest Earth Coeff., $(Ko)_{ABH}$ =	0.398	EV =	0.00	0
At Rest Earth Coeff., $(Ko)_{ABV}$ =	0.190	DC =	0.00	0
		LS =	0	0
		Live Load Surcharge =	0 ft	

Connection Plate Locations

Wall Height =	12.68	ft	
Wall Width for Plates =	0.00	ft	(Wall does not count on plates for stability)
Plate #3, y1 from Bot of Wall Stem =	4.50	ft	
Plate #2, y1 from Bot of Wall Stem =	1.50	ft	
Plate #1, y1 from Bot of Wall Stem =	0	ft	(input 0 if no plate #1)
Tributary Wall Height for Plate #3 =	9.68	ft	
Tributary Wall Height for Plate #2 =	3	ft	
Tributary Wall Height for Plate #1 =	0	ft	
Conn. Plate Force EH, Plate #3 =	0	lb	
Conn. Plate Force EH, Plate #2 =	0	lb	
Conn. Plate Force EH, Plate #1 =	0	lb	
Conn. Plate Force LS, Plate #3 =	0	lb	
Conn. Plate Force LS, Plate #2 =	0	lb	
Conn. Plate Force LS, Plate #1 =	0	lb	
Conn. Plate Force, Plate #3 Pu =	0	lb	
Conn. Plate Force, Plate #2 Pu =	0	lb	
Conn. Plate Force, Plate #1 Pu =	0	lb	
Controlling Pu =	0.0	kips	

Check Bolt / Insert Capacity

No. of Bolts Per Connection =	2		
Bolt Pu =	0.00	kips	
Bolt Pullout Capacity (ult) =	8.2875	kips	**OK**
Bolt Shear Capacity (ult) =	4.3875	kips	**OK**

Project: 2016.059.009 BY: rja 6/23/2016
Anchored Wingwall Design CHK:

Check Bending in Wall - Vertical Bars

Assumptions: 1.) Wall stem is cantileverd from anchor.
2.) Use active earth pressure because wall is free to rotate.
3.) Critical Wall section will be at maximum horizontal load, at tallest anchor section.

Modification Factor = 1

Data:

H_{max} =	15.07	ft
h_{max} =	11.57	ft
LL surcharge, V_{LS} =	0.000	ksf
γ_{soil} =	0.140	ksf
K_a =	0.30	
δ =	25.5	
f'c =	4	ksi
fy =	60	ksi
0.65 < β1 < 0.85 =	0.85	(5.7.2.2)
Vertical Bars Size:	# 5	
Spacing:	6	in
Bar Cover:	2	in

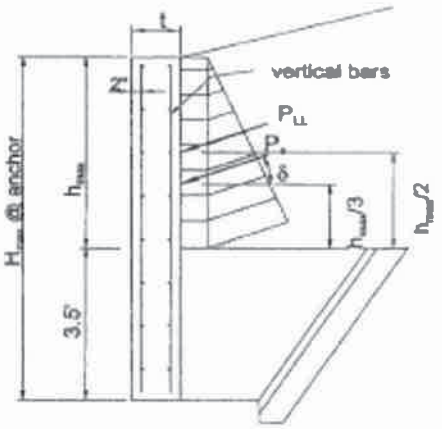

Find the horizontal load:

$$P_{soil} = (1/2)\gamma_S K_A h_{max}^2 (\cos\delta) = \quad 2.54 \text{ kip/ft}$$
$$P_{LS} = \sigma_{LS} K_A h_{max} (\cos\delta) = \quad 0.00 \text{ kip/ft}$$
CT = 0.00 kip/ft

Factored Loads:

	Str 1-a	Service	Extre-II
Mu	14.68	9.79	14.68
Vu	3.81	2.54	3.81

Moment Capacity:

As prov. :	0.614	in^2
d (in):	7.69	d = t - 2.0" cov. - 1/2 Bar Φ
a (in):	0.902	a=As*fy/(0.85*b*f'c)
c (in):	1.062	c=a/β1
ϕMn (kip-ft):	**19.98**	ϕMn = ϕ_M*As*fy*(d-a/2)/12
ϕ_M =	0.90	

(ϕ_M=0.75+0.15[(ε_t-ε_{cl})/(ε_{tl}-ε_{cl})], 0.75min, 0.9max, 5.5.4.2.1-2)

ϕMn > Mu **OK!**

Shear Capacity Check

ϕVn (kip): **10.49** ϕVn = 0.90*β*√f'c*b*d
β = 2.00
ϕVn > Vu **OK!**

Check Min. Reinforcement:

fr = .24 * vf'c = 0.48 ksi (5.4.2.6)
$S = bt^2/6$ = 200 in3
Flex. cracking var. fac. (Other Con. Strs.) 1.60 γ_1
A615, Gr. 60 Reinforcement (Carbon steel) 0.67 γ_3
Mcr = γ_3 * [(γ_1 * fr)*S] = 8.58 kip-ft (5.7.3.3.2)
Mr = ϕMn > (lesser of Mcr or 1.33 Mu)
Mcr = 8.58 kip-ft
1.33 * Mu = 19.52 kip-ft
Mr = ϕMn = 19.98 kip-ft **OK**

Crack Control Check

Ma = 9.79 **kip-ft/ft**

$E_c = 1820 \bullet \sqrt{f'c}$ = 3640ksi
E_s = 29000ksi dc= 2.31in
γe= 0.75
$n = E_s / E_c$ = 7.97
ρn = 0.052992

$k = \sqrt{2\rho n + \rho n^2} - \rho n$ = 0.277
$j = 1-(k/3)$ = 0.908
$f_s = (M)/(A_s jd)$ = 27.43 ksi
Bs= 1+ac/(0.7*(n-ac))= 1.43
max spa ≤ [(700γe) / (βsfs)] - 2dc = 9 in **OK!**

Project: 2016.059.009
Anchored Wingwall Design

BY: rja 6/23/2
CHK:

Check Type D Anchor Attachment

Assumptions: 1.) Only top three connection bars, represented by T1, T2 & T3 in sketch below, will resist tension.
2.) Assume min. steel will control, design for 1.33 Mu (See ART. 5.7.3.3.2)

Anchor #1 $M_{D\,EH}$=	98.43	kip-ft	Anchor #1 $M_{D\,LS}$=	0.00	kip-ft
Anchor #2 $M_{D\,EH}$=	51.33	kip-ft	Anchor #2 $M_{D\,LS}$=	0.00	kip-ft
Anchor #3 $M_{D\,EH}$=	0.00	kip-ft	Anchor #3 $M_{D\,LS}$=	0.00	kip-ft
Anchor #1 $M_{D\,CT}$=	0.00	kip-ft	Anchor #1 1 Mod. Factor =	1.00	
Anchor #2 $M_{D\,CT}$=	0.00	kip-ft	Anchor #2 1 Mod. Factor =	1.00	
Anchor #3 $M_{D\,CT}$=	0.00	kip-ft	Anchor #3 1 Mod. Factor =	0.00	

Data:

f'c =	4	ksi
fy =	60	ksi
0.65 < β1 < 0.85 =	0.85	(5.7.2.2)
Connection Bars Size:	# 5	

Factored Loads:

	Str 1-a	Service	Extre-II
Anchor #1 Mu (k-ft) =	147.64	98.428	147.64
Anchor #2 Mu (k-ft) =	76.99	51.33	76.994
Anchor #3 Mu (k-ft) =	0.00	0	0
1.33 Mu =	196.36		

Moment Capacity:

As prov. :	1.841	in^2	(6 Bars)
d (in):	30.00		
b (in):	6.00		
a (in):	5.414	a=As*fy/(0.85*b*f'c)	
c (in):	6.369	c=a/β1	
ϕMn (kip-ft):	**226.08**	$\phi Mn = \phi_M * As * fy * (d-a/2)/12$	
ϕ_M =	0.90		

$(\phi_M = 0.75 + 0.15[(\varepsilon_t - \varepsilon_{cl})/(\varepsilon_{tl} - \varepsilon_{cl})]$, 0.75min, 0.9max, 5.5.4.:

ϕMn > Mu **OK!**

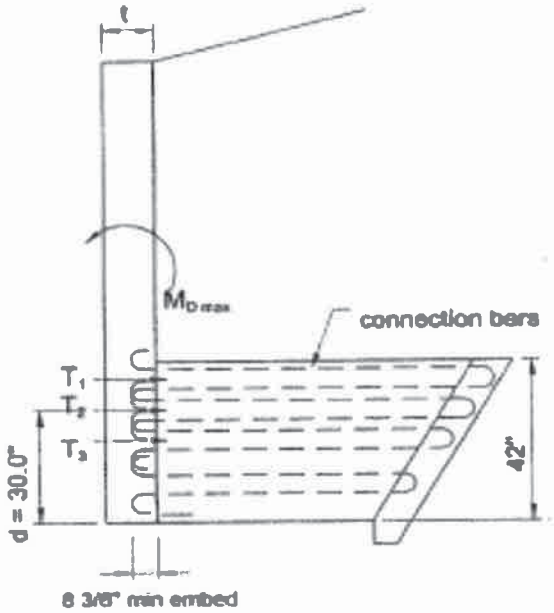

Check Hook Development:

db (in): 0.625

ART 5.11.2.4

L_{hb} (in):	11.88	<-- Controls
or		
8db (in):	5.00	
or		
6in min:	6.00	

L_{dh} (in): 6.20 =(0.8)L_{hb} x A,req'd/As,pro'c

DELTA
ENGINEERS, ARCHITECTS, & LAND SURVEYORS
860 Hooper Road, Endwell, NY 13760
www.deltaengineers.com
Phone: (607) 231-6600
Fax: (607) 231-6650

JOB 2016.059.009
DESCIPTION 28x8 under 8
SHEET NO. ____ OF ____ SCALE ____
CALCULATED BY rja DATE 7/1/2016
CHECKED BY ____ DATE ____

HEADWALL DESIGN

ATTACHED
HEADWALL

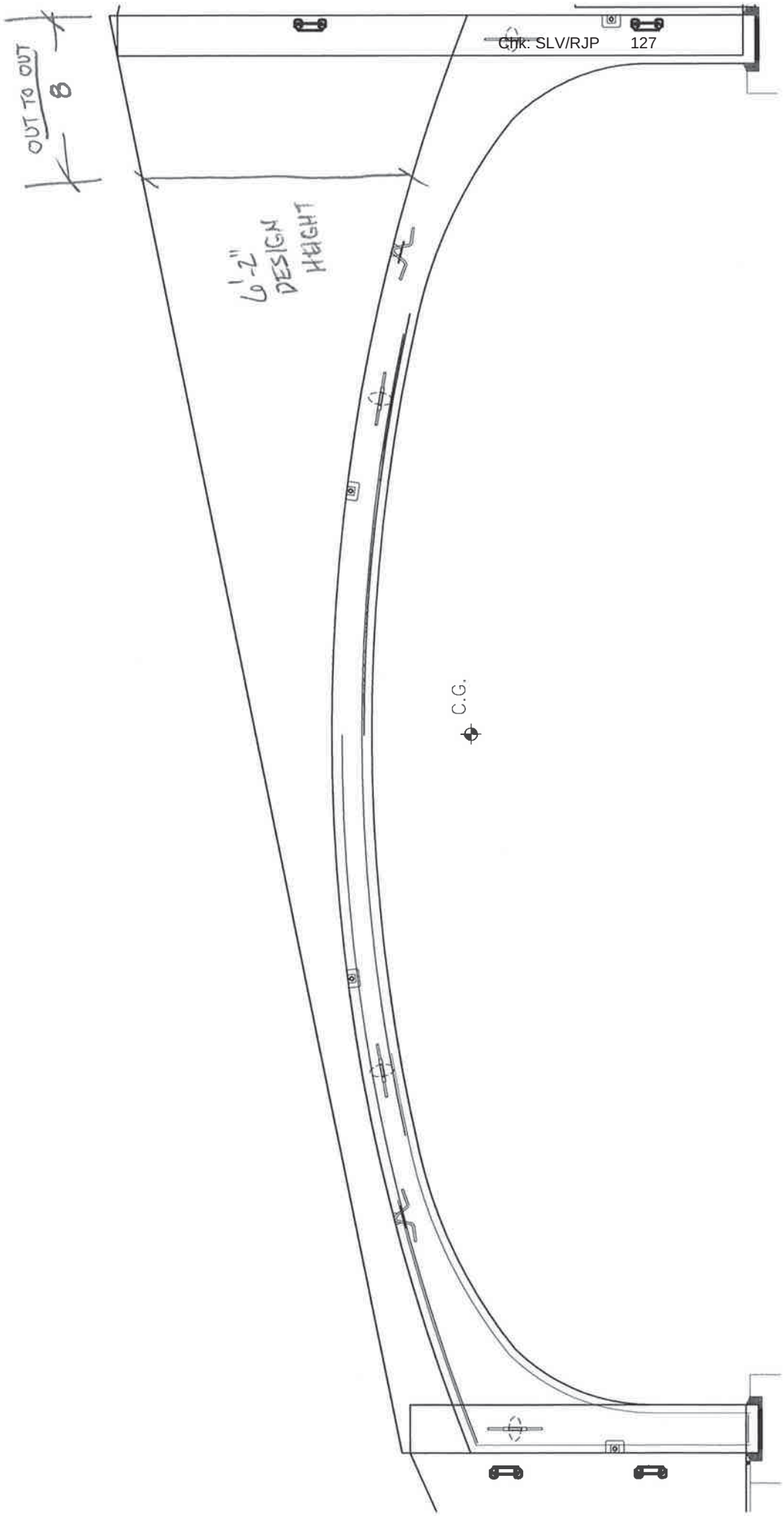

DELTA
ENGINEERS, ARCHITECTS, & LAND SURVEYORS
860 Hooper Road
Endwell, New York 13760
(607) 231-6600 Fax 231-6650

JOB 2016.059.009
DESCIPTION 28x8 headwall
SHEET NO ____ OF ____ SCALE ____
CALCULATED BY rja DATE 6/23/2016
CHECKED BY ____ DATE ____

Design Code: AASHTO LRFD 5th Edition

Soil Zones	Ret	Fdtn	Agg
Soil Density (pcf)=	140	140	140
Soil Friction Angle (Phi)=	32.0°	32.0°	32.0°
Interface Friction Angle (delta) =	21.3°		
Back slope angle (beta)=	26.5°		
Backslope distance (x) =	1.00 ft		
Broken backslope angle (beta')=	26.5°		
Slope - Back face of wall=	0.0°		
Water Table Height, (ft) =	0.00		

W_{conc} = 150 pcf
Cohesion = 0 psf
Embedment = 1.00 ft

Allowable Bearing (Strength) NA psf
(Service) 2000 psf

Ka= 0.454
KaH= 0.423 EP(H)= 59.24
KaV= 0.165 EP(V)= 23.14

Coulomb 'C' or Rankine 'R'	C
Calculate Strength Bearing Pressure "Y" or "N"	NA
Backslope Continuous 'C' or Broken 'B'	C
Distance to Level Grade	12 ft
Specified Service Brg. Press (psf)	2000
Specified Strength Brg. Press (psf)	NA

*Given Sliding Coefficient 0.440

Bearing Coefficients

Nq	Nγ	Nc	Qult
23.17	30.21	35.48	9588 psf

Stem Height, hs=	6.17 ft
Stem Projection Above Grade =	3.00 in
Stem Thickness, ts=	12.00 in
Base Thickness, tb=	12.00 in
Toe Width, It=	1.00 ft
Heel Width, Ih=	1.00 ft
Surcharge, hsc=	2.00 ft

Design Wall Height-Ht= 6.92 ft
Total Base Width Lb= 3.00 ft
Height at back of soil wedge Hw = 7.42 ft
Stem Des Hgt 5.92 ft
Wedge hgt 0.50 ft

Load Factors

Limit State	Str 1-a	Str 1-b	Str IV	Service
EH	1.50	1.50	1.50	1.00
LS	1.75	1.75	0.00	1.00
EV	1.00	1.35	1.35	1.00
DC	0.90	1.25	1.50	1.00

Resistance Factors

Table 10.5.5.2.2-1 Sliding	0.90	0.90	0.90	1.00
Bearing	0.45	0.45	0.45	0.33
5.5.4.2.1 Moment	0.90			
Shear	0.90			

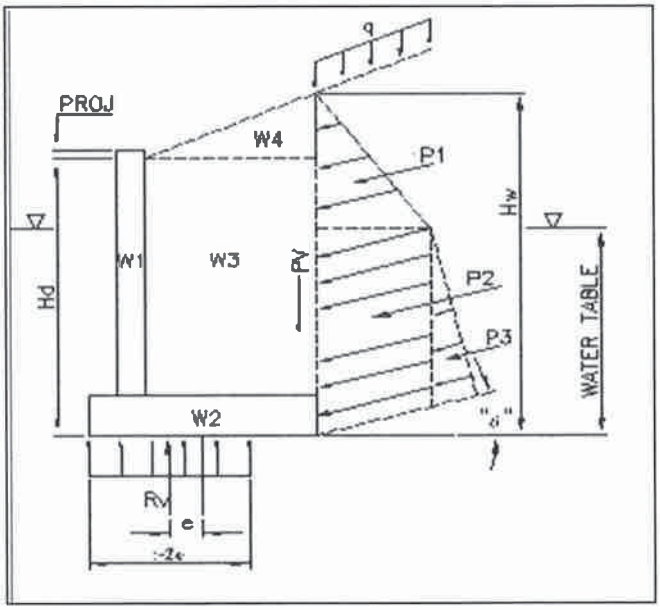

Wall Pressure Diagram

DELTA
ENGINEERS, ARCHITECTS, & LAND SURVEYORS
860 Hooper Road
Endwell New York 13760
(607) 231-6600 Fax 231-6650

Chk: SLV/RJP 129

JOB 2016.059.009
DESCIPTION 28x8 headwall
SHEET NO. ____ OF ____ SCALE ____
CALCULATED BY rja DATE 6/23/2016
CHECKED BY ____ DATE ____

Case 1 - Dry Condition

ACTIVE FORCES - Factored

Limit State	Str 1-a	Str 1-b	Str IV	Service	Arm	Overturning Moments (lb-ft) Str 1-a	Str 1-b	Str IV	Service
Pq (lb)	1538	1538	0	879	3.71 ft	5701	5701	0	3258
P1 (lb)	2443	2443	2443	1629	2.47 ft	6039	6039	6039	4026
P2 (lb)	0	0	0	0	0 ft	0	0	0	0
P3 (lb)	0	0	0	0	0.00 ft	0	0	0	0
Total Sliding Force (lb)	3981	3981	2443	2507		11740	11740	6039	7284

Case 1 - Dry Condition

VERTICAL FORCES - Factored

Limit State	Str 1-a	Str 1-b	Str IV	Service	Arm	Resisting Moments (lb-ft) Str 1-a	Str 1-b	Str IV	Service
Stem Wall - w1 (lb)=	833	1156	1388	925	1.50 ft	1249	1734	2081	1388
Base Slab - w2 (lb)=	405	563	675	450	1.50 ft	608	844	1013	675
Soil above heel - w3 (lb)=	828	1118	1118	828	2.50 ft	2071	2796	2796	2071
Soil wedge - w4 (lb)=	35	47	47	35	1.67 ft	58	79	79	58
w5 (lb)=	0	0	0	0	3.00 ft	0	0	0	0
PaV (lb)=	636	859	859	636	3.00 ft	1908	2576	2576	1908
Resultant Ver. Force (lb)	2737	3743	4087	2874		5894	8029	8545	6100

Sliding Resistance	1204	1647	1798	1265	
Sliding Check	**NG**	**NG**	**NG**	**NG**	
Safety Factor	0.3	0.4	0.7	0.5	
Resultant Location =	-2.14	-0.99	0.61	-0.41	
Eccentricity =	3.64	2.49	0.89	1.91	
Check Eccentricity	**NG**	**NG**	**NG**	**NG**	10.6.3.3
Safety Factor	0.2	0.3	0.8	0.4	
Bearing Pressure, P =	-641	-1887	3334	-3490	
Check Bearing	**OK**	**OK**	**OK**	**OK**	
Safety Factor	#####	#####	#####	-0.6	

NA

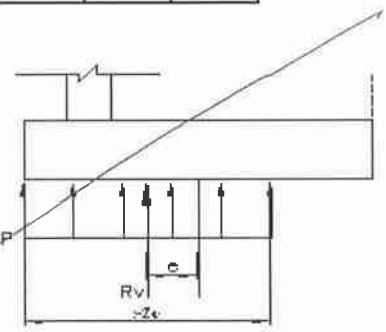

Footing Pressure Diagram

Dist. From P2

For Toe Reinforcing	P1	P2	To Toe	P3	Pheel	
Bearing Pressure (psf) =	7547	-5722	-6.41	3124	9902	Str 1-a
	7465	-4970	-2.97	3320	12484	Str 1-b
Lb/6 = 0.50 ft	3779	-1054	1.84	2168	-331	Str IV
	4622	-2706	-1.24	2179	12103	Service

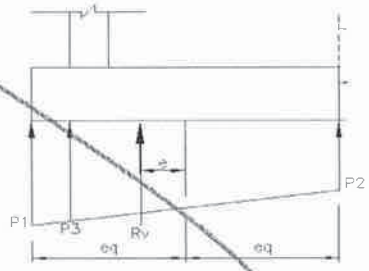

Footing Pressure Diagram

DELTA
ENGINEERS, ARCHITECTS, & LAND SURVEYORS
860 Hooper Road
Endwell, New York 13760
(607) 231-6600 Fax 231-6650

JOB 2016.059.009
DESCIPTION 28x8 headwall
SHEET NO. ____ OF ____ SCALE ____
CALCULATED BY rja DATE 6/23/2016
CHECKED BY ____ DATE ____

Stem Design

MATERIAL PROPERTIES:

1	Concrete Strength, F'c	5.0	ksi
2	Reinforcing Steel Yield, Fy	60	ksi
3	Concrete Unit Weight	150	pcf
4	Soil Unit Weight	140	pcf

Member Design Width b = 12.00 in
Member Thickness Ts = 12.00 in
Bar Cover = 2.00 in
Bar Size = 5
de=Ts-Cov-Bar Size/2 = 9.69 in

5.4.2.4 $E_c = 1820 \bullet \sqrt{f'c} =$ 4070 ksi
$E_s =$ 29000 ksi
$n = E_s / E_c =$ 7.13
$0.65 < \beta_1 < 0.85 =$ 0.80

$f_r = 0.37\sqrt{f'c} =$ 0.83 ksi 5.4.2.6

Moment due to Surcharge, Mq = 2.44 kip-ft
Moment due to Active Soil, Mp= 2.61 kip-ft
Design Ultimate Moment, Mu = 8.18 kip-ft
Ultimate Shear, Vu = 3.16 kips

Capacity Reduction Factors
Moment, ΦM = 0.90
Shear, ΦS = 0.90

dv = Greater of .72h or 0.9 de = 8.7188 in 5.8.2.9
βv = 2.0 5.8.3.4
ϕVc=ϕ(0.0316)βv√f'c*b*dv= 13.31 kips/ft **> Vu OK** 5.8.3.4 & 5.8.2.4

$$\rho = \left[1 - \left(\sqrt{1 - \frac{2 \bullet M_u}{\phi b d^2 \bullet .85 f'c}}\right)\right] \bullet \frac{.85 f'c}{f_y} = 0.00163$$

Steel Area Req'd; As =ρ * b * d = 0.1898 in²/ft
Use #5 Bar @ 10.00 in oc
As Prov = 0.37 in²/ft
ρ Prov = 0.00317
Check Min As > 1.33 AsReq OK
φMn = φAsfy(de-a/2)/12 = 15.69 kip-ft **OK**

c=As*Fy/.85*f'c*β1*b = 0.541 in 5.7.3.1.2
c/de ≤ 0.6; c/de = 0.056 OK 5.7.2.1
a = β_1c = 0.433 in
Ig = bt³/12 = 1728 in⁴
y_t = T/2 = 6.00 in
Mcr = fr*(Ig / yt) = 19.86 kip-ft
1.2Mcr= 23.83 kip-ft

CHECK CRACKING

$k = \sqrt{2\rho n + (\rho n)^2} - \rho n =$ 0.1911
$j = 1 - (k/3) =$ 0.936
$f_s = (M)/(A_s jd) =$ 18.131 ksi
max spa ≤ [(700γe) / (βsfs)] - 2dc = 17 in

dc= 2.31 in
Bs=1+dc/(0.7*(h-dc))= 1.341
γe= 0.75

DELTA
ENGINEERS, ARCHITECTS, & LAND SURVEYORS
860 Hooper Road, Endwell, NY 13760
www.deltaengineers.com
Phone: (607) 231-6600
Fax: (607) 231-6650

JOB 2016.059.009

DESCIPTION 28x8 under 8

SHEET NO. ____ OF ____ SCALE ____

CALCULATED BY rja DATE 7/5/2016

CHECKED BY ____ DATE ____

LOAD RATING

DELTA
ENGINEERS, ARCHITECTS, & LAND SURVEYORS
860 Hooper Road, Endwell, NY 13760
www.deltaengineers.com
Phone: (607) 231-6600
Fax: (607) 231-6650

JOB 2016.059.009 Chk: SLV/RJP 132
DESCIPTION 28x8 arch under 8.6' fill
SHEET NO. ____ OF ____ SCALE ____
CALCULATED BY rja DATE 7/5/2016
CHECKED BY ____ DATE ____

SUMMARY OF BRIDGE RATING

TOWN: Duxbury, VT PROJECT NO.: BF 013-4(47)

CARRIES: VT 100 OVER: CROSSETT BROOK

DESIGN LIVE LOAD	AASHTO HL-93
DESIGN SPAN	28 FEET
REINFORCING STEEL	60 KSI
CONCRETE	6000 PSI
DESIGN SOIL UNIT WEIGHT	140 PCF

LOAD RATING							
LOADING LEVELS	H-20	HL-93	3S2	6AT	3AS	4AS	5AS
INVENTORY		1.08	-	-	-	-	-
OPERATING		1.4					
COMMENTS	28x8 ARCH UNDER 8.6' FILL						

LOAD RATING (TONS)							
LOADING LEVELS	H-20	HL-93	3S2	6AT	3AS	4AS	5AS
INVENTORY	0	38.88	-	-	-	-	-
OPERATING	0	50.4	0	0	0	0	0
COMMENTS	28x8 ARCH UNDER 8.6' FILL						

* H-20 AND STATE TRUCKS RATINGS TO FOLLOW DESIGN APPROVAL

ok. please provide with next submittal

DELTA
ENGINEERS, ARCHITECTS, & LAND SURVEYORS
860 Hooper Road, Endwell, NY 13760
www.deltaengineers.com
Phone: (607) 231-6600
Fax: (607) 231-6650

Chk: SLV/RJP 133

JOB 2016.059.009

DESCRIPTION 28x8 under 8 case 4

SHEET NO. OF SCALE

CALCULATED BY rja DATE 7/5/2016

CHECKED BY DATE

LRFR LOAD RATING -HL-93

Technical Data & Load Factors

Culvert Span (S) =	29.00 ft.	(C to C)
Crown Radius (Rad) =	33.83 ft.	
Bar Cover		
Outside Face (Cov_{out}) =	2.00 in	
Inside Face (Cov_{in}) =	1.50 in	
Design Section Length (b) =	12 in	
Compressive Strength (f_c) =	6.0 ksi	
Yield Strength (f_y) =	60 ksi	
Stirrup Yield Strength (f_{ystir}) =	60 ksi	
Circumferential Reinforcement Spa. (spa.) =	5.00 in	
Circumferential Reinforcement Provided (n) =	1	(n=1 for 1 layer, n=2 for multiple layers) AASHTO
Reinforcement Type (Type) =	3	AASHTO Table 12.10.4.2.4d

1 - smooth wire or plain bar
2 - WWF (8" max spa. Smooth)
3 - WWF (deformed) or bar (deformed)

12.10.4.4d-1

Resistance Factors:

ϕf - Flexure =	1.00	
ϕr - Radial Tension =	0.90	AASHTO Table 12.5.5-1
ϕv - Diag Tension =	0.90	
Radial Tension Process (F_{rp}) =	1.00	
Diag Tension Process (F_{vp}) =	1.00	AASHTO 12.10.4.2.3

Load Factors:

	IR	OR	
LL Factor	1.75	1.35	load modification factors already applied to magnitude
γ_pDC (component)	1.31		(1.25*1.05)
γ_pEH (hor. At rest earth pressure)	0.86		(0.9/1.05)
γ_pEV	1.37		(1.3*1.05)

DELTA
ENGINEERS, ARCHITECTS, & LAND SURVEYORS
860 Hooper Road, Endwell, NY 13760
www.deltaengineers.com
Phone: (607) 231-6600
Fax: (607) 231-6650

JOB	2016.059.009		
DESCRIPTION	28x8 under 8 case 4		
SHEET NO.		OF	
CALCULATED BY	rja	DATE	7/5/2016
CHECKED BY		DATE	

Design Force Summary

	Factored DC+EV+EH			Max Factored Total Load			Max Factored LL			
Node Number	Factored Thrust Nu (k/ft)	Factored Moment Mu (k-in/ft)	Factored Shear Vu (k/ft)	Factored Thrust Nu (k/ft)	Factored Moment Mu (k-in/ft)	Factored Shear Vu (k/ft)	Factored Thrust Nu (k/ft)	Factored Moment Mu (k-in/ft)	Factored Shear Vu (k/ft)	Thk at node (in)
1	-22.14	275.22	-0.03	-27.23	360.20	-0.06	-5.09	84.98	-0.02	10.000
2	-22.37	270.08	0.80	-27.49	353.94	0.99	-5.12	83.86	0.19	10.000
3	-22.70	253.74	1.66	-27.87	333.65	2.09	-5.16	79.91	0.44	10.000
4	-23.24	225.56	2.58	-28.48	297.74	3.33	-5.24	72.18	0.75	10.000
5	-23.93	184.46	3.59	-29.29	244.21	4.72	-5.36	59.75	1.13	10.000
6	-24.72	129.08	4.72	-30.25	170.90	6.28	-5.53	41.82	1.56	10.000
7	-25.60	57.57	6.00	-31.34	75.45	8.01	-5.74	17.88	2.01	10.000
8	-26.56	-32.02	7.43	-32.58	-44.28	9.89	-6.02	-12.26	2.47	10.063
9	-27.58	-141.89	9.02	-33.93	-190.32	11.92	-6.35	-48.43	2.90	10.063
10	-28.61	-274.38	10.77	-35.35	-364.46	14.06	-6.74	-90.08	3.29	10.688
11	-29.66	-431.26	12.63	-36.82	-567.95	16.26	-7.16	-136.69	3.63	12.375
12	-30.77	-613.57	14.55	-38.35	-801.07	18.46	-7.58	-187.50	3.90	15.250
13	-31.95	-822.16	16.58	-39.94	-1063.70	20.69	-8.00	-241.55	4.11	19.250
14	-35.06	-1058.99	1.91	-43.56	-1356.84	2.05	-8.51	-297.85	0.15	27.000
15	-37.39	-930.06	-14.57	-46.07	-1191.56	-18.71	-8.67	-261.50	-4.14	19.813
16	-36.98	-787.22	-16.06	-45.39	-1007.87	-20.64	-8.41	-220.64	-4.58	15.438
17	-36.44	-630.60	-17.49	-44.58	-806.66	-22.42	-8.14	-176.06	-4.93	12.875
18	-36.33	-461.04	-17.83	-44.27	-589.70	-22.79	-7.94	-128.66	-4.96	12.000
19	-36.77	-225.56	-17.11	-44.69	-289.14	-21.89	-7.91	-63.58	-4.78	12.000
20	-37.29	0.00	-16.38	-45.25	0.00	-21.04	-7.96	0.00	-4.66	12.000

Note: "-" thrust indicate compression

Chk: SLV/RJP

DELTA
ENGINEERS, ARCHITECTS, & LAND SURVEYORS
860 Hooper Road, Endwell, NY 13760
www.deltaengineers.com
Phone: (607) 231-6600
Fax: (607) 231-6650

Chk: SLV/RJP 135

JOB 2016.059.009

DESCRIPTION 28x8 under 8 case 4

SHEET NO. OF SCALE

CALCULATED BY rja DATE 7/5/2016

CHECKED BY DATE

LRFR LOAD RATING -HL-93

Node Number	Total Fac. Nu (k/ft)	Factored DC+EH+EV Nu_D (k/ft)	Factored DC+EH+EV Mu_D (in-k/ft)	Factored DC+EH+EV Vu_D (k/ft)	Factored LL Nu_{LL} (k/ft)	Factored LL $+Mu_{LL}$ (in-k/ft)	Factored LL Vu_{LL} (k/ft)	Thick (in)
1	-27.23	-22.14	275.22	0.03	-5.09	84.98	0.02	10
2	-27.49	-22.37	270.08	0.80	-5.12	83.86	0.19	10
3	-27.87	-22.70	253.74	1.66	-5.16	79.91	0.44	10
4	-28.48	-23.24	225.56	2.58	-5.24	72.18	0.75	10
5	-29.29	-23.93	184.46	3.59	-5.36	59.75	1.13	10
6	-30.25	-24.72	129.08	4.72	-5.53	41.82	1.56	10
7	-31.34	-25.60	57.57	6.00	-5.74	17.88	2.01	10
8	-32.58	-26.56	-32.02	7.43	-6.02	-12.26	2.47	10.063
9	-33.93	-27.58	-141.89	9.02	-6.35	-48.43	2.90	10.063
10	-35.35	-28.61	-274.38	10.77	-6.74	-90.08	3.29	10.688
11	-36.82	-29.66	-431.26	12.63	-7.16	-136.69	3.63	12.375
12	-38.35	-30.77	-613.57	14.55	-7.58	-187.50	3.90	15.25
13	-39.94	-31.95	-822.16	16.58	-8.00	-241.55	4.11	19.25
14	-43.56	-35.06	-1058.99	1.91	-8.51	-297.85	0.15	27
15	-46.07	-37.39	-930.06	14.57	-8.67	-261.50	4.14	19.813
16	-45.39	-36.98	-787.22	16.06	-8.41	-220.64	4.58	15.438
17	-44.58	-36.44	-630.60	17.49	-8.14	-176.06	4.93	12.875
18	-44.27	-36.33	-461.04	17.83	-7.94	-128.66	4.96	12
19	-44.69	-36.77	-225.56	17.11	-7.91	-63.58	4.78	12
20	-45.25	-37.29	0.00	16.38	-7.96	0.00	4.66	12

note all shear values normalized to positive

DELTA
ENGINEERS, ARCHITECTS, & LAND SURVEYORS
860 Hooper Road, Endwell, NY 13760
www.deltaengineers.com
Phone: (607) 231-6600
Fax: (607) 231-6650

JOB 2016.059.009

DESCRIPTION 28x8 under 8 case 4

SHEET NO. OF SCALE

CALCULATED BY rja DATE 7/5/2016

CHECKED BY DATE

Node Number	thk (in)	d (in)	As'in (prov'd) (in^2 / ft)	As'out (prov'd) (in^2 / ft)
1	10.0	8.00	0.92	0.24
2	10.0	8.00	0.92	0.24
3	10.0	8.00	0.92	0.24
4	10.0	8.00	0.92	0.24
5	10.0	8.00	0.92	0.24
6	10.0	8.00	0.92	0.24
7	10.0	8.00	0.92	0.24
8	10.1	7.56	0.92	0.24
9	10.1	7.56	0.92	1.06
10	10.7	8.19	0.24	1.06
11	12.4	9.88	0.48	1.56
12	15.3	12.75	0.48	1.56
13	19.3	16.75	0.48	1.56
14	27.0	24.50	0.48	1.56
15	19.8	17.31	0.48	1.56
16	15.4	12.94	0.48	1.56
17	12.9	10.38	0.48	1.56
18	12.0	9.50	0.48	1.56
19	12.0	9.50	0.48	1.06
20	12.0	9.50	0.48	1.06

DELTA
ENGINEERS, ARCHITECTS, & LAND SURVEYORS
860 Hooper Road, Endwell, NY 13760
www.deltaengineers.com
Phone: (607) 231-6600
Fax: (607) 231-6650

Chk: SLV/RJP 137

JOB 2016.059.009

DESCRIPTION 28x8 under 8 case 4

SHEET NO. OF SCALE

CALCULATED BY rja DATE 7/5/2016

CHECKED BY DATE

LRFR LOAD RATING -HL-93

Node Number	thk (in)	d (in)	As (prov'd) (in^2 / ft)	Total Fac. Nu (k/ft)	Phi Mn (in-k/ft)
1	10.0	8.00	0.92	-27.23	523.84
2	10.0	8.00	0.92	-27.49	524.78
3	10.0	8.00	0.92	-27.87	526.15
4	10.0	8.00	0.92	-28.48	528.39
5	10.0	8.00	0.92	-29.29	531.32
6	10.0	8.00	0.92	-30.25	534.77
7	10.0	8.00	0.92	-31.34	538.70
8	10.1	7.56	0.24	-32.58	254.80
9	10.1	7.56	1.06	-33.93	572.58
10	10.7	8.19	1.06	-35.35	628.09
11	12.4	9.88	1.56	-36.82	1013.16
12	15.3	12.75	1.56	-38.35	1343.58
13	19.3	16.75	1.56	-39.94	1806.56
14	27.0	24.50	1.56	-43.56	2727.60
15	19.8	17.31	1.56	-46.07	1917.51
16	15.4	12.94	1.56	-45.39	1403.55
17	12.9	10.38	1.56	-44.58	1102.07
18	12.0	9.50	1.56	-44.27	999.54
19	12.0	9.50	1.06	-44.69	774.66
20	12.0	9.50	1.06	-45.25	777.03

AASHTO 12.10.4.2.4a

g = 0.85 b f'c = 61

$$\phi M_n = \frac{1}{2}\left[g(\phi_f d)^2 - Nu(2\phi_f d - h) - \frac{(g\phi_f d - N_u - A_s F_y)^2}{g} \right]$$

DELTA
ENGINEERS, ARCHITECTS, & LAND SURVEYORS
860 Hooper Road, Endwell, NY 13760
www.deltaengineers.com
Phone: (607) 231-6600
Fax: (607) 231-6650

Chk: SLV/RJP 138

JOB 2016.059.009

DESCRIPTION 28x8 under 8 case 4

SHEET NO. OF SCALE

CALCULATED BY rja DATE 7/5/2016

CHECKED BY DATE

LRFR LOAD RATING -HL-93

Node Number	thk (in)	d (in)	Phi Mn (in-k/ft)	Mu_D (in-k/ft)	$+Mu_{LL}$ (in-k/ft)	Inventory Rating	Operating Rating
1	10.0	8.00	523.84	275.22	84.98	2.93	3.79
2	10.0	8.00	524.78	270.08	83.86	3.04	3.94
3	10.0	8.00	526.15	253.74	79.91	3.41	4.42
4	10.0	8.00	528.39	225.56	72.18	4.20	5.44
5	10.0	8.00	531.32	184.46	59.75	5.81	7.53
6	10.0	8.00	534.77	129.08	41.82	9.70	12.57
7	10.0	8.00	538.70	57.57	17.88	26.91	34.89
8	10.1	7.56	254.80	-32.02	-12.26	18.18	23.56
9	10.1	7.56	572.58	-141.89	-48.43	8.89	11.53
10	10.7	8.19	628.09	-274.38	-90.08	3.93	5.09
11	12.4	9.88	1013.16	-431.26	-136.69	4.26	5.52
12	15.3	12.75	1343.58	-613.57	-187.50	3.89	5.05
13	19.3	16.75	1806.56	-822.16	-241.55	4.08	5.28
14	27.0	24.50	2727.60	-1058.99	-297.85	5.60	7.26
15	19.8	17.31	1917.51	-930.06	-261.50	3.78	4.89
16	15.4	12.94	1403.55	-787.22	-220.64	2.79	3.62
17	12.9	10.38	1102.07	-630.60	-176.06	2.68	3.47
18	12.0	9.50	999.54	-461.04	-128.66	4.19	5.43
19	12.0	9.50	774.66	-225.56	-63.58	8.64	11.20
20	12.0	9.50	777.03	0.00	0.00	N/A	N/A
					Controlling	**2.68**	**3.47**

g = 0.85 b f'c = 61

$$\phi M_n = \frac{1}{2}\left[g(\phi_f d)^2 - Nu(2\phi_f d - h) - \frac{(g\phi_f d - N_u - A_s F_y)^2}{g} \right]$$

DELTA ENGINEERS
184 Court Street
BINGHAMTON, NEW YORK 13901
(607) 231-6600 Fax 231-6650

Chk: SLV/RJP 139

JOB 2016.059.009

DESCRIPTION 28x8 under 8 case 4

SHEET NO. OF SCALE

CALCULATED BY rja DATE 7/5/2016

CHECKED BY DATE

LRFR LOAD RATING -HL-93

Vn=Vc+Vs

Elmt Nmbr	thk (in)	d (in)	As (prov'd) (in^2 / ft)	Vtotal (kip/ft)	Vdl only (kip/ft)	Vll only (kip/ft)	ϕVn (kip/ft)	1.75 INV	1.35 OPR
1	10.0	8.000	0.92	0.06	0.03	0.02	12.93	574.6	744.9
2	10.0	8.000	0.92	0.99	0.80	0.19	12.94	64.12	83.11
3	10.0	8.000	0.92	2.09	1.66	0.44	12.96	25.97	33.67
4	10.0	8.000	0.92	3.33	2.58	0.75	12.99	13.87	17.98
5	10.0	8.000	0.92	4.72	3.59	1.13	13.03	8.348	10.82
6	10.0	8.000	0.92	6.28	4.72	1.56	13.77	5.802	7.522
7	10.0	8.000	0.92	8.01	6.00	2.01	31.10	12.47	16.17
8	10.1	7.563	0.24	9.89	7.43	2.47	29.61	8.988	11.65
9	10.1	7.563	1.06	11.92	9.02	2.90	21.55	4.323	5.604
10	10.7	8.188	1.06	14.06	10.77	3.29	15.53	1.448	1.877
11	12.4	9.875	1.56	16.26	12.63	3.63	18.45	1.605	2.08
12	15.3	12.750	1.56	18.46	14.55	3.90	20.52	1.527	1.98
13	19.3	16.750	1.56	20.69	16.58	4.11	24.12	1.835	2.379
14	27.0	24.500	1.56	2.05	1.91	0.15	30.37	193	250.2
15	19.8	17.313	1.56	18.71	14.57	4.14	24.41	2.377	3.081
16	15.4	12.938	1.56	20.64	16.06	4.58	21.01	1.081	1.402
17	12.9	10.375	1.56	22.42	17.49	4.93	47.69	6.125	7.94
18	12.0	9.500	1.56	22.79	17.83	4.96	47.90	6.066	7.864
19	12.0	9.500	1.06	21.89	17.11	4.78	57.25	8.403	10.89
20	12.0	9.500	1.06	21.04	16.38	4.66	64.14	10.24	13.28
							controling:	**1.081**	**1.402**

$$F_d = 0.8 + \frac{1.6}{d} \le 1.3$$

$$F_n = 1 + \frac{N_u}{24 * thk}$$

$$\rho = \frac{A_s}{\phi b d} \le 0.02$$

$$\phi V_n = \phi 0.0316 b d F_{vp} \sqrt{f'c}\,(1.1 + 63\rho)\left(\frac{F_d F_n}{F_c}\right)$$

$$F_c = 1 \pm \left(\frac{d}{2 * rad}\right)$$

Shear Resistance With Stirrups **AASHTO 12.10.4.2.5**

DELTA ENGINEERS
184 Court Street
BINGHAMTON, NEW YORK 13901
(607) 231-6600 Fax 231-6650

Chk: SLV/RJP 140

JOB 2016.059.009

DESCRIPTION 28x8 under 8 case 4

SHEET NO. OF SCALE 0

CALCULATED BY rja DATE 7/5/2016

CHECKED BY DATE

Arch Design

Positive Moment Design (cont.)

Shear Resistance With Radial Stirrups AASHTO 12.10.4.2.6

Element Number	thk (in)	d (in)	Sv MAX (in)	Sv Act (in)	Avr (in^2 / ft)	Sv MAX (in)	Sv Act (in)	Avs (in^2 / ft)	ϕVs (k/ft)
1	10.0	8.13	5.48	0.00	0.00	5.48	0.00	0.00	0
2	10.0	8.13	5.48	0.00	0.00	5.48	0.00	0.00	0
3	10.0	8.13	5.48	0.00	0.00	5.48	0.00	0.00	0
4	10.0	8.13	5.48	0.00	0.00	5.48	0.00	0.00	0
5	10.0	8.13	5.48	0.00	0.00	5.48	0.00	0.00	0
6	10.0	8.13	5.48	0.00	0.00	5.48	0.00	0.00	0
7	10.0	8.13	5.48	0.00	0.00	5.48	0.00	0.00	0
8	10.1	7.69	5.19	0.00	0.00	5.19	0.00	0.00	0
9	10.1	7.69	5.19	0.00	0.00	5.19	0.00	0.00	0
10	10.7	8.31	5.61	0.00	0.00	5.61	0.00	0.00	0
11	12.4	10.00	6.75	0.00	0.00	6.75	0.00	0.00	0
12	15.3	12.88	8.69	0.00	0.00	8.69	0.00	0.00	0
13	19.3	16.88	11.39	0.00	0.00	11.39	0.00	0.00	0
14	27.0	24.63	16.62	0.00	0.00	16.62	0.00	0.00	0
15	19.8	17.44	11.77	0.00	0.00	11.77	0.00	0.00	0
16	15.4	13.06	8.82	0.00	0.00	8.82	0.00	0.00	0
17	12.9	10.50	7.09	4.50	0.01	7.09	4.50	0.06	28.49
18	12.0	9.63	6.50	4.50	0.01	6.50	4.50	0.08	26.42
19	12.0	9.63	6.50	4.50	0.00	6.50	4.50	0.06	27.08
20	12.0	9.63	6.50	4.50	0.00	6.50	4.50	0.05	26.94

For Radial Tension

$$A_{vr} = \frac{1.1 s_v \left(M_u - 0.45 N_u \phi_r d\right)}{f_y r_s \phi_r d}$$

$$s_v \le 0.75 \phi_r d$$

For Shear

$$A_{vs} = \frac{1.1 s_v}{f_y \phi_v d}\left(V_u F_c - V_c\right) + A_{vr}$$

$$V_c = \frac{4 V_r}{\frac{M_{nu}}{V_u d} + 1} \le 0.0633 \phi_v b d \sqrt{f'_c}$$

Mnu=Mu-Nu(4h-d)/8

rearanging Avs equation above and

taking Fc =1.0, Vs = (Avs-Avr)*Fys*ϕv*d/(1.1*Sv) (<8*√F'c*Bw*d)

(#3@4.5")

As provided = 0.293 sq.in. / L.F.