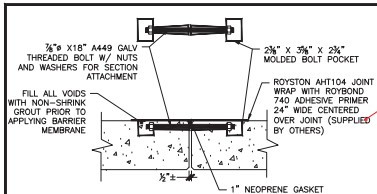

1 S1.0 ARCH CULVERT JOINT CONNECTION DETAIL
1" = 1'-0"

Arch Culvert Note 10 below suggests Michie is providing the membrane. Please verify which is correct

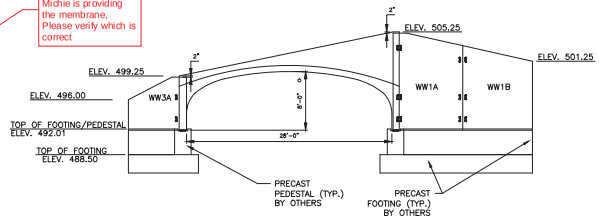

2 S1.0 CULVERT LAYOUT ELEVATION INLET VIEW
1/8" = 1'-0"

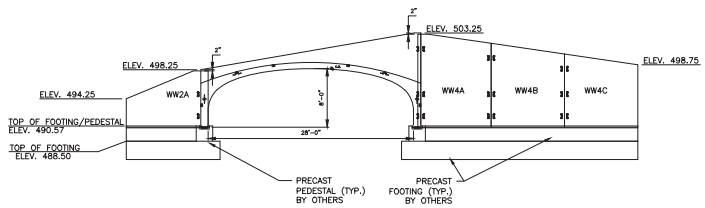

3 S1.0 CULVERT LAYOUT ELEVATION OUTLET VIEW
1/8" = 1'-0"

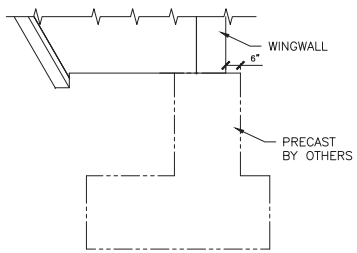

4 S1.0 WING WALL FOOTING SECTION
3/16" = 1'-0"

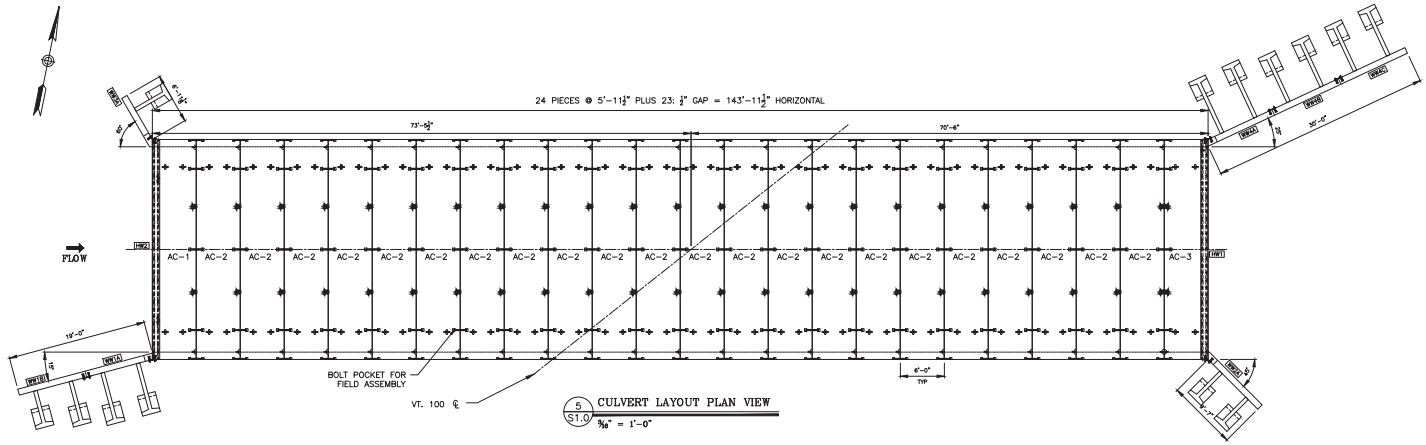

5 S1.0 CULVERT LAYOUT PLAN VIEW
3/16" = 1'-0"

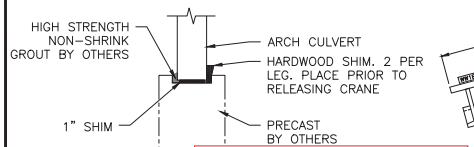

Provide the following from Subsection 540.04:

(e)..... Include details of potential repair procedures.
(f) The curing method, detailing sequence and duration.

(h) The design of the lifting attachments.
(i) Transportation, handling, and storage details.
(j) The installation procedure including a detailed grouting procedure.
(k) Description of Quality Control procedures

Refer to the noted subsection for additional information/requirements

6 S1.0 CULVERT FOOTING SECTION
3/16" = 1'-0"

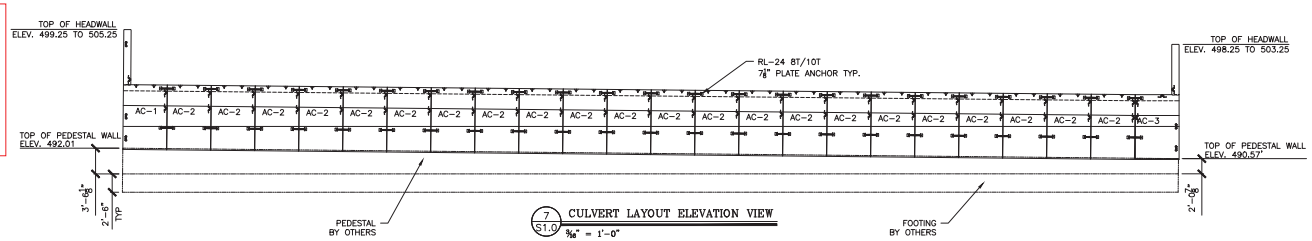

7 S1.0 CULVERT LAYOUT ELEVATION VIEW
3/16" = 1'-0"

GENERAL NOTES:

1. THE PLANS ARE INTENDED TO BE DRAWN TO SCALE. HOWEVER, IF A CRITICAL DIMENSION IS NOT PROVIDED, MICHIE CORPORATION SHOULD BE CONTACTED FOR VERIFICATION.

2. IF ANY OF THE WORK TO BE DONE AS SHOWN ON THE DRAWINGS DOES NOT CORRESPOND WITH THE EXISTING FIELD CONDITIONS, CONTACT THE ENGINEER PRIOR TO PROCEEDING WITH THE WORK IN QUESTION.

3. FIELD-VERIFY ALL ELEVATIONS PRIOR TO THE START OF CONSTRUCTION. IF THERE ARE ANY DISCREPANCIES, CONSULT THE ENGINEER PRIOR TO PROCEEDING WITH THE WORK IN QUESTION.

4. MAINTAIN MINIMUM 60 DEGREE SLING ANGLE WHEN HANDLING PRECAST COMPONENTS.

5. PRECAST COMPONENTS SHALL REACH A MINIMUM COMPRESSIVE STRENGTH OF 3,000 PSI PRIOR TO STRIPPING, AND THE MINIMUM DESIGN COMPRESSIVE STRENGTH PRIOR TO SHIPPING, UNLESS OTHERWISE DIRECTED BY THE ENGINEER.

6. HORIZONTAL JOINTS AND VOIDS SHALL BE FILLED WITH NON-SHRINK GROUT.

7. SHOP DRAWINGS WERE DEVELOPED USING THE FOLLOWING RESOURCES FOR THE CONTRACT:
   - "TOWN OF DUXBURY, DUXBURY, VERMONT, VT100 ROAD CULVERT PROJECT PLANS.

8. IF THERE IS ADDITIONAL INFORMATION PERTINENT TO THE FABRICATION AND INSTALLATION OF THESE UNITS THAT IS NOT CONTAINED WITHIN THE RESOURCES LISTED ABOVE IT SHALL BE BROUGHT TO THE ATTENTION OF MICHIE CORPORATION. FAILURE TO MAKE SUCH ADDITIONAL INFORMATION AVAILABLE SHALL RELIEVE MICHIE CORPORATION OF ALL LIABILITIES ARISING FROM ERRORS OR OMISSIONS RELATED TO THE OMITTED INFORMATION.

9. ALL VOIDS SHALL BE FILLED WITH NON SHRINK GROUT.

10. ALL PRODUCTS PROVIDED WITH A CAST FORM FINISH OR SMOOTH TROWEL FINISH.

11. CURING: FORMS LEFT IN PLACE UNTIL 3000 PSI STRIPPING STRENGTH IS ACHIEVED.

Curing needs to be in accordance with Subsection 540.08.

ARCH CULVERT NOTES:

1. ARCH CULVERT SECTIONS ARE DESIGNED IN ACCORDANCE WITH
   - AASHTO "LRFD BRIDGE DESIGN SPECIFICATIONS", 6TH EDITION.
   - STANDARD SPECIFICATION AND GENERAL SPECIAL PROVISIONS SECTION 540.

2. THE FOLLOWING CRITERIA WAS USED FOR DESIGN:
   - LIVE LOAD: HL-93
   - EARTH COVER: 8.6 FEET
   - BACKFILL SOIL UNIT WEIGHT: 140 PCF
   - BACKFILL SOIL FRICTION ANGLE: 30 DEGREES
   - CONCRETE STRENGTH: 6,500 PSI
   - STEEL YIELD STRENGTH: 60,000 PSI

3. ARCH CULVERT AND HEADWALL CONCRETE SHALL BE SELF-CONSOLIDATING CONFORMING TO SECTION 540 WITH A MINIMUM 28-DAY COMPRESSIVE STRENGTH OF 6,000 PSI. AGGREGATE SHALL CONFORM TO SECTION 540 WITH A MAXIMUM DIAMETER OF 3/4". CEMENT SHALL CONFORM TO ASTM C150. MICHIE MIX 6535CAS

4. REINFORCING SHALL BE GRADE 60, EPOXY COATED, CONFORMING TO ASTM A-615. ALL BARS SHALL BE BENT COLD.

5. ALL EXPOSED EDGES EXCEPT WHERE NOTED SHALL BE CHAMFERED 3/4".

6. SUBGRADE PREPARATION SHALL CONFORM TO PROJECT PLANS.

7. UNLESS OTHERWISE SPECIFIED IN THE CONTRACT DOCUMENTS, BACKFILL SHALL CONFORM TO VTRANS SECTION 708.04 GRANULAR BACKFILL FOR STRUCTURES. BACKFILL SHALL EXTEND BEYOND THE HORIZONTAL LIMITS OF THE STRUCTURE AS DETAILED IN THE CONTRACT DOCUMENTS. PLACEMENT SHALL CONFORM TO VTRANS SECTION 204.08.

8. EXPOSED SURFACES SHOULD BE COATED ONSITE WITH WATER REPELLENT, SILANE (SUPPLIED BY OTHERS).

9. EACH SECTION SHALL BE PROVIDED WITH BOLT POCKETS FOR ATTACHMENT TO ADJACENT SECTIONS. 7/8" DIA. GALV. THREADED ROD, WASHERS AND NUTS SHALL BE PROVIDED FOR ASSEMBLY IN THE FIELD. CLOSED-CELL NEOPRENE JOINT SEALANT SHALL BE USED IN ALL JOINTS UNLESS NOTED OTHERWISE.

10. 2FT WIDE ROYSTON JOINT WRAP WITH ADHESIVE PROVIDED BY MICHIE CORP. INSTALLED BY OTHERS, CENTER ON JOINT AFTER HORIZONTAL GROUTING. BARRIER MEMBRANE PROVIDED AND ~~INSTALLED BY OTHERS OVER TOP~~ OF STRUCTURE, AND DOWN SIDES TO 6" BELOW HORIZONTAL JOINT.

Identify the mix to be used for the wingwalls since it is seemingly different than the culvert based on design strength and lack of mix number

WING WALL NOTES:

1. SECTIONS ARE DESIGNED IN ACCORDANCE WITH
   - AASHTO "LRFD BRIDGE DESIGN SPECIFICATIONS", 6TH EDITION
   - STANDARD SPECIFICATION AND GENERAL SPECIAL PROVISIONS SECTION 540.

2. THE FOLLOWING SOIL PROPERTIES WERE USED IN THE DESIGN:

	SOIL WEIGHT [PCF]	FRICTION ANGLE [DEG]
• RETAINED SOIL	140	32
• FOUNDATION SOIL	140	32

   - LIVE LOAD SURCHARGE = 2'
   - BACKSLOPE ANGLE: ±8:1
   - ALLOWABLE BEARING RESISTANCE = 6,000 PSF

3. CONCRETE SHALL BE SELF-CONSOLIDATING CONFORMING TO SECTION 540 WITH A MINIMUM 28-DAY COMPRESSIVE STRENGTH OF 4,000 PSI. AGGREGATE SHALL CONFORM TO SECTION 540 WITH A MAXIMUM DIAMETER OF 3/4". CEMENT SHALL CONFORM TO ASTM C150.

4. REINFORCING SHALL BE GRADE 60, EPOXY COATED, CONFORMING TO ASTM A-774. ALL BARS SHALL BE BENT COLD.

5. ALL EXPOSED EDGES EXCEPT WHERE NOTED SHALL BE CHAMFERED 3/4".

6. UNLESS OTHERWISE SPECIFIED IN THE CONTRACT DOCUMENTS, BACKFILL SHALL CONFORM TO VTRANS SECTION 708.04 GRANULAR BACKFILL FOR STRUCTURES. BACKFILL SHALL EXTEND BEYOND THE HORIZONTAL LIMITS OF THE STRUCTURE AS DETAILED IN THE CONTRACT DOCUMENTS. PLACEMENT SHALL CONFORM TO VTRANS SECTION 204.08

FOOTING NOTES:
BY OTHERS

TYLIN INTERNATIONAL
The stamped documents are hereby:
____ Approved
____ Approved as noted
_X_ Revise and resubmit
See transmittal for additional information as applicable.
This review is for general conformance with design concept only. Any deviation from the plans or specifications not clearly noted by the Contractor has not been reviewed. Review by the Engineer shall not relieve the Contractor of the contractual responsibility for any errors or deviation from the contract requirements.
Josh Olund 08/01/2016
Reviewer Date

Vermont Agency of Transportation
RECEIVED
CK'D BY TYLIN CK'D BY KMH
July 29, 2016
RESUBMIT Yes Rejected
BY kristin Higgins DATE 08/01/2016

LIST OF SHEETS:

S1.0 CULVERT LAYOUT-PLAN AND ELEVATION
S2.0 CULVERT SECTION AND ELEVATION
S3.0 CULVERT SECTIONS AND ELEVATIONS
S4.0 HEAD WALL DETAILS
S5.0 WINGWALL DETAILS
S6.0 WINGWALL DETAILS
S7.0 ANCHOR DETAILS
S8.0 LIFTING DETAILS

No.	Date	Revisions	By

9/25/16

DESIGNED AND DETAILED BY:
DELTA
860 HOOPER ROAD, ENDWELL, NY 13760-1594
VOICE: (607) 231-6000 FAX: (607) 231-6050

VT 100 Road Culvert
Duxbury, Vermont

Culvert Layout - Plan and Elevation

Scale: AS SHOWN
Checked by:
Drawn by: CKC
Designed by: DELTA
Project No. 7347
Date: 6/29/16

PREPARED FOR:
MICHIE
MICHIE CORPORATION, INC.
173 BUXTON INDUSTRIAL DRIVE-PO BOX 870
WEST LEBANON, NH 03784
PHONE: 603-428-3218
FAX: 603-428-7425

DWG NO.
S1.0

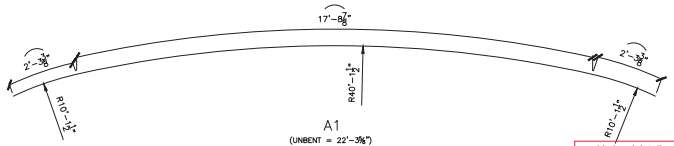

A1
(UNBENT = 22'-3⅝")

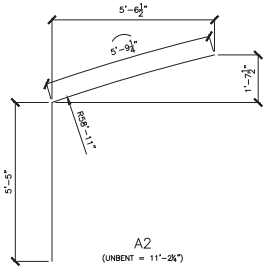

A2
(UNBENT = 11'-2¼")

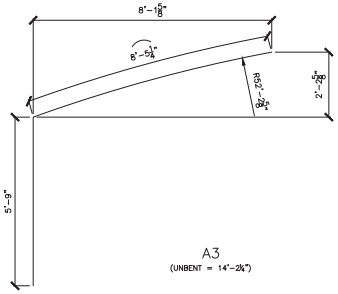

A3
(UNBENT = 14'-2¼")

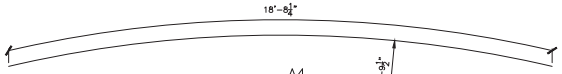

A4
(UNBENT = 18'-8¼")

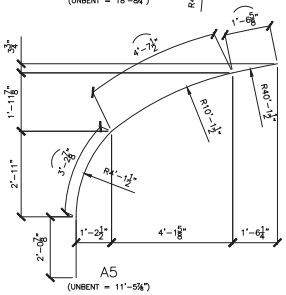

A5
(UNBENT = 11'-5⅜")

S1
(UNBENT = 1'-3¼")

S2
(UNBENT = 1'-3¼")

S3
(UNBENT = 1'-3¼")

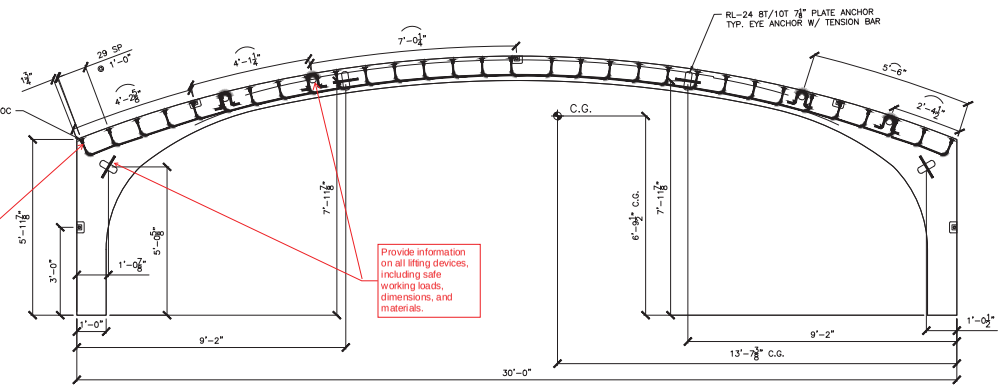

Provide bend details. 3 additional couplers need to be provided to VTrans. If the distance between the bell and the beginning of the bend is less than 7 inches, then the 3 couplers provided to VTrans should be straight (without the bend).

Provide information on all lifting devices, including safe working loads, dimensions, and materials.

1 S2.0 ELEVATION VIEW
⅜" = 1'-0"

Vermont Agency of Transportation
RECEIVED
CK'D BY TYLIN OK'D BY KMH
July 29, 2016
RESUBMIT Yes Rejected
BY Kristin Higgins DATE 08/01/2016

TYLIN INTERNATIONAL
The stamped documents are hereby:
___ Approved
___ Approved as noted
_X_ Revise and resubmit
See transmittal for additional information as applicable.
This review is for general conformance with design concept only. Any deviation from the plans or specifications not clearly noted by the Contractor has not been reviewed. Review by the Engineer shall not relieve the Contractor of the contractual responsibility for any errors or deviation from the contract requirements.
Josh Olund 08/01/2016
Reviewer Date

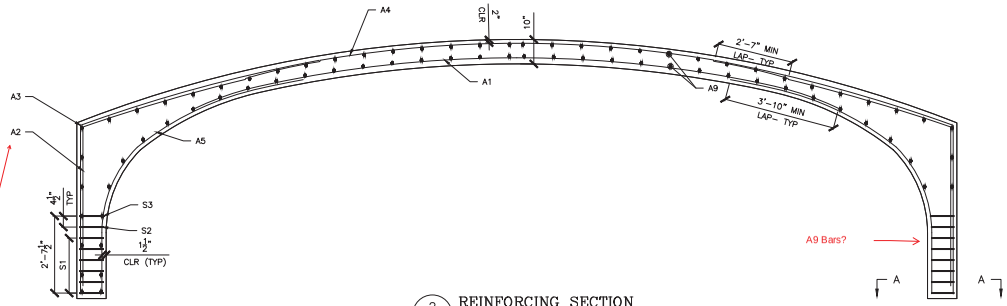

2 S2.0 REINFORCING SECTION
⅜" = 1'-0"

Bar "A2" is shown adjacent to "A3" in the view above, but bundled with "A5" in section view below. Please coordinate the two views and clarify where "A2" is to be placed

verify placement order of A9 bars and A2 bars. View above shows A2 bars inside of the A9 bars; this view does not reflect that.

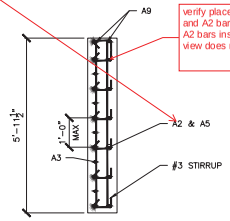

SECTION A–A

The number of bars does not match Section AA nor the "Size/Spacing" column. Please coordinate.

REINFORCING SCHEDULE				
BAR MARK	TYPE	SIZE/SPACING	CUT LENGTH	# OF PCS
A1	RADIUS	#6@5"	22'-3⅝"	15
A2	L	#5@5"	11'-2¼"	30
A3	L	#6@5"	14'-2¼"	30
A4	RADIUS	#4@10"	18'-8¼"	7
A5	L	#6@10"	11'-5⅜"	7/LEG
A9	STRAIGHT	#4@12"	5'-7½"	52
S1	STIRRUP	#3@4½"	1'-3¼"	42/LEG
S2	STIRRUP	#3@4½"	1'-3⅜"	7/LEG
S3	STIRRUP	#3@4½"	1'-3¾"	7/LEG

currently 76 drawn in the view above, without the addition of any in the right leg

No.	Date	Revisions	By

7/25/16

DESIGNED AND DETAILED BY:
DELTA
DELTA ENGINEERING, P.C.
860 HOOPER ROAD, ENDWELL, NY 13760-1594
VOICE: (607) 231-6000 FAX: (607) 231-6050

VT 100 Road Culvert
Duxbury, Vermont

Culvert Section and Elevation

Scale: AS SHOWN
Checked by:
Drawn by: CSC
Designed by: DELTA
Project No. 7347
Date: 6/29/16

PREPARED FOR:
MICHIE CORPORATION, INC.
173 BUXTON INDUSTRIAL DRIVE-PO BOX 870
WINDSOR, VERMONT 05089-0870
PHONE: 603-428-3218
FAX: 603-428-7426

DWG NO.
S2.0

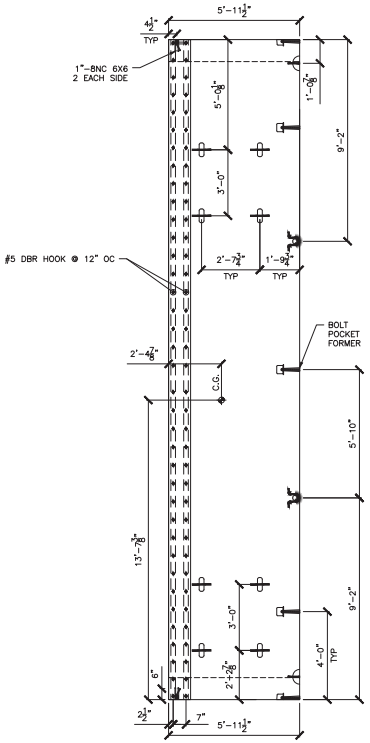

1 S3.0 AC-1 PLAN VIEW
⅜" = 1'-0"

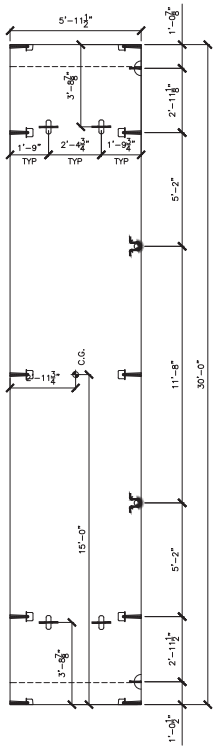

2 S3.0 AC-2 PLAN VIEW
⅜" = 1'-0"

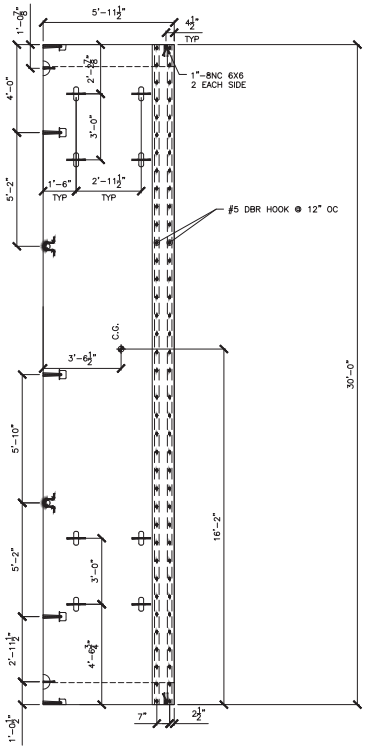

3 S3.0 AC-3 PLAN VIEW
⅜" = 1'-0"

The headwalls are to be plumb after installation on site, and the arch will be tipped 1%. Need to adjust geometry of arch and headwall to achieve the required geometry and fit-up with the wingwalls.

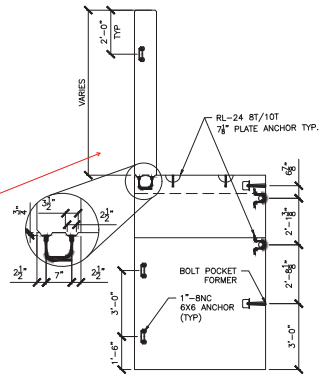

4 S3.0 AC-1 ELEVATION VIEW

AC-1: 1 REQ'D
UNIT WEIGHT AND VOLUME:
CULVERT: 9.24 CY (37,422#)
HEADWALL: 2.79 CY (11,300#)

TOTAL WEIGHT: 48,722#

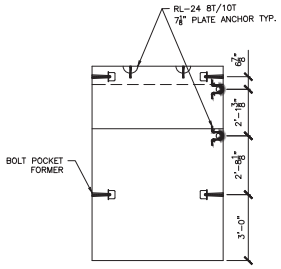

5 S3.0 AC-2 ELEVATION VIEW
⅜" = 1'-0"

AC-2: 22 REQ'D
UNIT WEIGHT AND VOLUME:
CULVERT: 9.24 CY (37,422#)

TOTAL WEIGHT: 37,422#

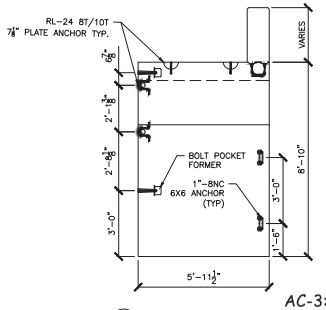

6 S3.0 AC-3 ELEVATION VIEW
⅜" = 1'-0"

AC-3: 1 REQ'D
UNIT WEIGHT AND VOLUME:
CULVERT: 9.24 CY (37,422#)
HEADWALL: 2.71 CY (11,016#)

TOTAL WEIGHT: 48,438#

Vermont Agency of Transportation
RECEIVED
CK'D BY TYLIN OK'D BY KMH
July 29, 2016
RESUBMIT Yes Rejected
BY kristin Higgins DATE 08/01/2016

TYLIN INTERNATIONAL
The stamped documents are hereby:
___ Approved
___ Approved as noted
_X_ Revise and resubmit
See transmittal for additional information as applicable.
This review is for general conformance with design concept only. Any deviation from the plans or specifications not clearly noted by the Contractor has not been reviewed. Review by the Engineer shall not relieve the Contractor of the contractual responsibility for any errors or deviation from the contract requirements.
Josh Olund 08/01/2016
Reviewer Date

No.	Date	Revisions	By

DESIGNED AND DETAILED BY:
DELTA ENGINEERING, P.C.
860 HOOPER ROAD, ENDWELL, NY 13760-1594
VOICE: (607) 231-6600 FAX: (607) 231-6650

VT 100 Road Culvert
Duxbury, Vermont

Culvert Plans And Elevations

Project No. 7347
Date 6/29/16
Designed by: DELTA
Drawn by: CSC
Checked by:
Scale: AS SHOWN

PREPARED FOR:
MICHIE CORPORATION, INC.
173 BUXTON INDUSTRIAL DRIVE-PO BOX 870
HINESBURG, VT 05461-0870
PHONE: 802-482-3232
FAX: 603-429-7425

DWG NO.
S3.0

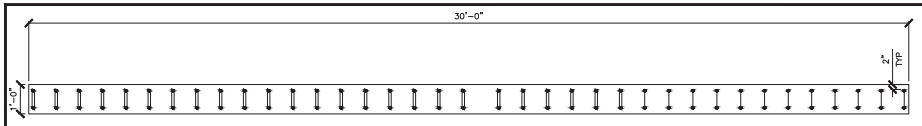

1 S4.0 INLET HEAD WALL PLAN VIEW
½" = 1'-0"

HW2 ONE REQUIRED
EACH PIECE WEIGHS: 11,300 LB
HEAD WALL: 2.79 CY

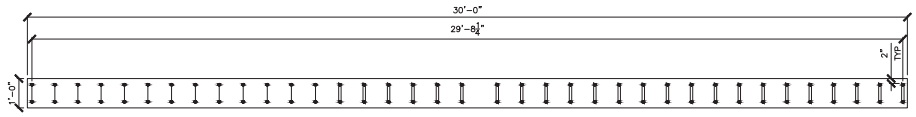

2 S4.0 OUTLET HEAD WALL PLAN VIEW
½" = 1'-0"

HW1 ONE REQUIRED
EACH PIECE WEIGHS: 11,016 LB
HEAD WALL: 2.72 CY

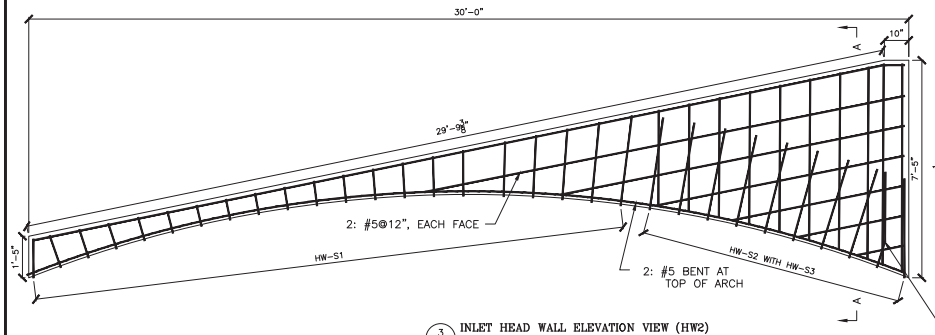

3 S4.0 INLET HEAD WALL ELEVATION VIEW (HW2)
½" = 1'-0"

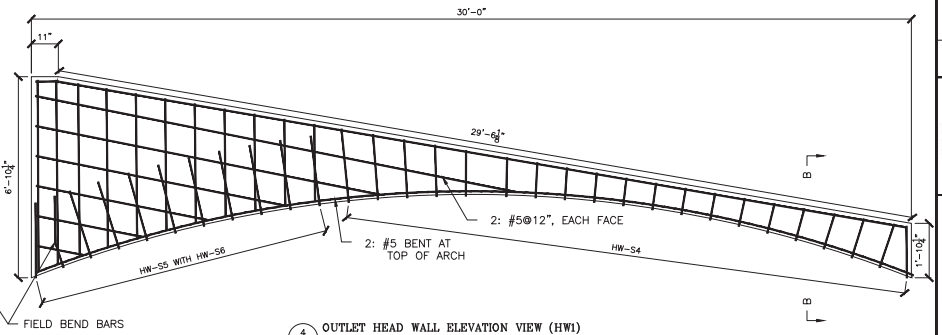

4 S4.0 OUTLET HEAD WALL ELEVATION VIEW (HW1)
½" = 1'-0"

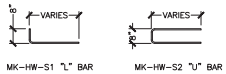

MK-HW-S1 "L" BAR MK-HW-S2 "U" BAR

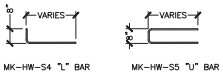

MK-HW-S4 "L" BAR MK-HW-S5 "U" BAR

INLET HW2 REINFORCING SCHEDULE				
BAR MARK	TYPE	SIZE/SPACING	CUT LENGTH	# OF PCS
MK-HW-S1	BENT	#5@10"	1'-4⅜" TO 3'-7¼"	21
MK-HW-S2	BENT	#5@10"	6'-1½" TO 14'-9¼"	10
MK-HW-S3	STRAIGHT DWL IN	#5	3'-2"	20

ALL REBAR TO BE EPOXY COATED

OUTLET HW1 REINFORCING SCHEDULE				
BAR MARK	TYPE	SIZE/SPACING	CUT LENGTH	# OF PCS
MK-HW-S4	BENT	#5@10"	1'-6¾" TO 3'-0¾"	27
MK-HW-S5	BENT	#5@10"	5'-8¾" TO 13'-7¾"	11
MK-HW-S6	STRAIGHT DWL IN	#5	3'-2"	22

ALL REBAR TO BE EPOXY COATED

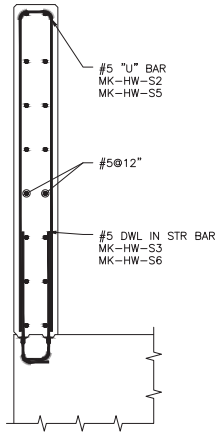

SECTION A-A

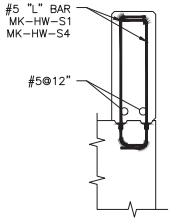

SECTION B-B

Vermont Agency of Transportation
RECEIVED
CK'D BY TYLIN OK'D BY KMH
July 29, 2016
RESUBMIT Yes Rejected
BY kristin Higgins DATE 08/01/2016

TYLIN INTERNATIONAL
The stamped documents are hereby:
____ Approved
____ Approved as noted
_X_ Revise and resubmit
See transmittal for additional information as applicable.
This review is for general conformance with design concept only. Any deviation from the plans or specifications not clearly noted by the Contractor has not been reviewed. Review by the Engineer shall not relieve the Contractor of the contractual responsibility for any errors or deviation from the contract requirements.
Josh Olund 08/01/2016
Reviewer Date

No.	Date	Revisions	By

DESIGNED AND DETAILED BY:
DELTA
800 HOOPER ROAD, ENDWELL, NY 13760-1594
VOICE: (607) 231-6000 FAX: (607) 231-6050

VT 100 Road Culvert
Duxbury, Vermont
Head Wall Details

Project No. 7347
Date 6/29/16
Designed by: DELTA
Drawn by: CSC
Checked by:
Scale: AS SHOWN

PREPARED FOR:
MICHIE CORPORATION, INC.
173 BUXTON INDUSTRIAL DRIVE-PO BOX 870
MONTPELIER, VERMONT 05602
PHONE: 802-229-2213
FAX: 802-229-3218

DWG NO.
S4.0

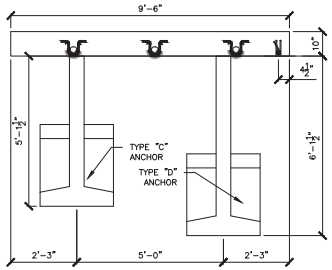

1 S5.0 WW1B PLAN VIEW
½" = 1'-0"

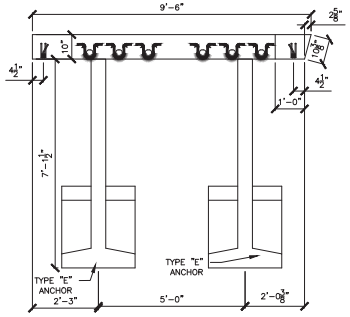

2 S5.0 WW1A PLAN VIEW
½" = 1'-0"

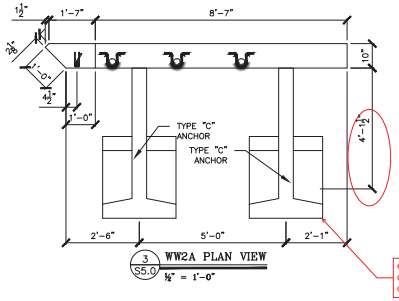

3 S5.0 WW2A PLAN VIEW
½" = 1'-0"

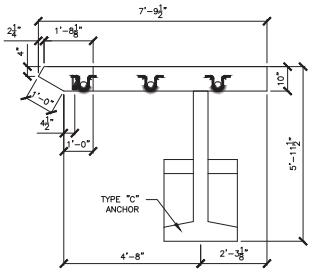

4 S5.0 WW3A PLAN VIEW
½" = 1'-0"

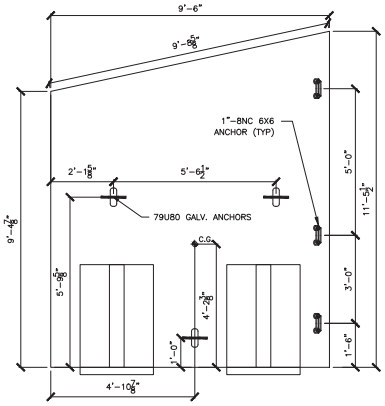

5 S5.0 WW1B ELEVATION
½" = 1'-0"

1 WW1B REQUIRED
UNIT WEIGHT AND VOLUME:
TOTAL: 16,478#
WALL: (2.98 CY)
D ANCHOR: 0.58 CY
C ANCHOR: 0.51 CY

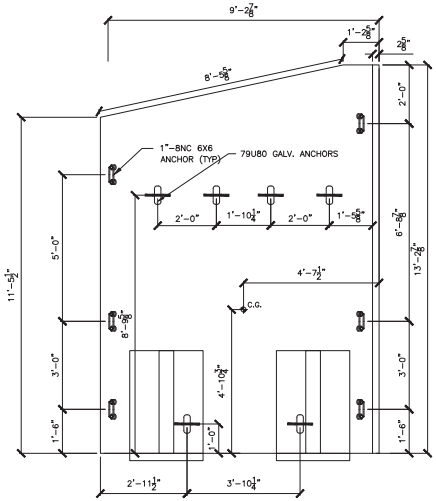

6 S5.0 WW1A ELEVATION
½" = 1'-0"

1 WW1A REQUIRED
UNIT WEIGHT AND VOLUME:
TOTAL: 19,619#
WALL: (3.56 CY)
E ANCHOR: 0.64 CY
E ANCHOR: 0.64 CY

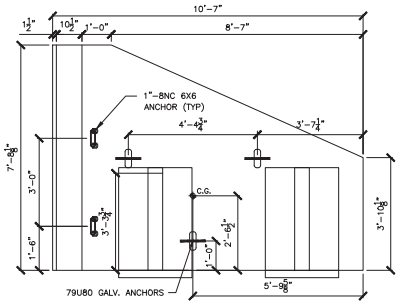

7 S5.0 WW2A ELEVATION
½" = 1'-0"

1 WW2A REQUIRED
UNIT WEIGHT AND VOLUME:
TOTAL: 11,688#
WALL: (1.87 CY)
C ANCHOR: 0.51 CY
C ANCHOR: 0.51 CY

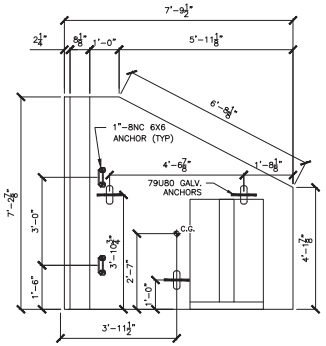

8 S5.0 WW3A ELEVATION
½" = 1'-0"

1 WW3A REQUIRED
UNIT WEIGHT AND VOLUME:
TOTAL: 7,540#
WALL: (1.35 CY)
C ANCHOR: 0.51 CY

Vermont Agency of Transportation
RECEIVED
CK'D BY TYLIN OK'D BY KMH
July 29, 2016
RESUBMIT Yes Rejected
BY kristin Higgins DATE 08/01/2016

TYLIN INTERNATIONAL
The stamped documents are hereby:
___ Approved
___ Approved as noted
X Revise and resubmit
See transmittal for additional information as applicable.
This review is for general conformance with design concept only. Any deviation from the plans or specifications not clearly noted by the Contractor has not been reviewed. Review by the Engineer shall not relieve the Contractor of the contractual responsibility for any errors or deviation from the contract requirements.
Josh Olund 08/01/2016
Reviewer Date

No.	Date	Revisions	By

7/25/16

DESIGNED AND DETAILED BY:
DELTA
DELTA ENGINEERING, P.C.
860 HOOPER ROAD, ENDWELL, NY 13760-1594
VOICE: (607) 231-6000 FAX: (607) 231-6050

VT 100 Road Culvert
Duxbury, Vermont
Wingwall Details

Scale: AS SHOWN
Checked by:
Drawn by: CSC
Designed by: DELTA
Project No. 7347
Date 6/29/16

PREPARED FOR:
MICHIE CORPORATION, INC.
173 BUXTON INDUSTRIAL DRIVE-PO BOX 870
HUNTSVILLE, AL 35804-0870
PHONE: 256-428-3253
FAX: 603-429-7425

DWG NO.
S5.0

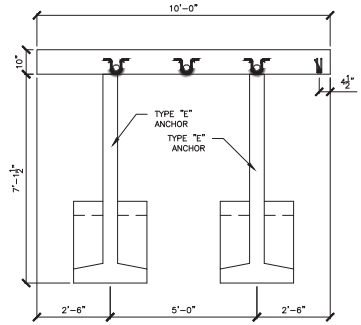

1 S6.0 WW4C PLAN VIEW
½" = 1'-0"

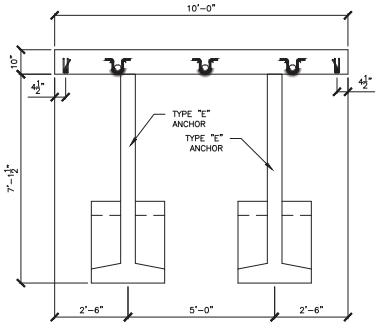

2 S6.0 WW4B PLAN VIEW
½" = 1'-0"

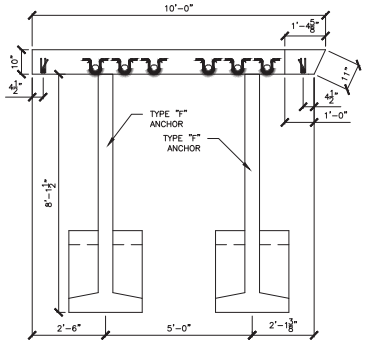

3 S6.0 WW4A PLAN VIEW
½" = 1'-0"

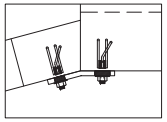

WW1 CONNECTION
165° BENT PLATE

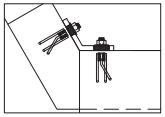

WW3 CONNECTION
120° BENT PLATE

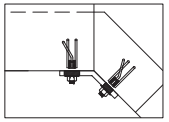

WW2 CONNECTION
135° BENT PLATE

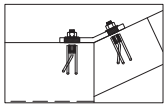

WW4 CONNECTION
155° BENT PLATE

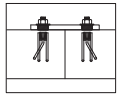

MIDWALL CONNECTION
180° PLATE

ALL CONNECTIONS USE
1" – 8NC 6X6 DOUBLE
WINGWALL ANCHORS
WITH 1" BENT PLATES

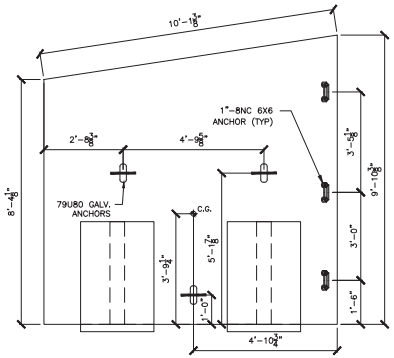

4 S6.0 WW4C ELEVATION
½" = 1'-0"

1 WW4C
REQUIRED
UNIT WEIGHT AND VOLUME:
TOTAL: 16,429#
WALL: (2.78 CY)
E ANCHOR: 0.64 CY
E ANCHOR: 0.64 CY

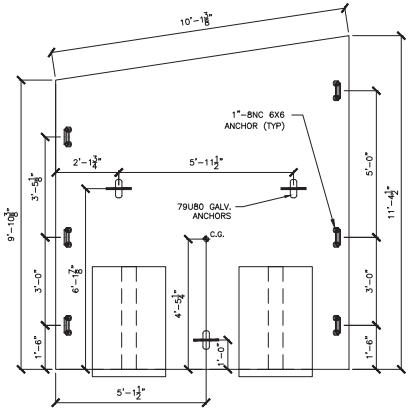

5 S6.0 WW4B ELEVATION
½" = 1'-0"

1 WW4B
REQUIRED
UNIT WEIGHT AND VOLUME:
TOTAL: 18,262#
WALL: (3.23 CY)
E ANCHOR: 0.64 CY
E ANCHOR: 0.64 CY

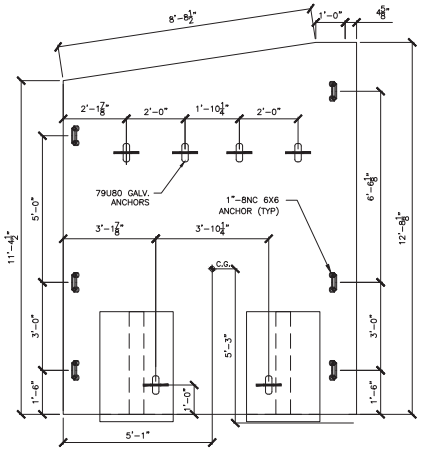

6 S6.0 WW4A ELEVATION
½" = 1'-0"

1 WW4A
REQUIRED
UNIT WEIGHT AND VOLUME:
TOTAL: 20,655#
WALL: (3.68 CY)
F ANCHOR: 0.71 CY
F ANCHOR: 0.71 CY

update quantity required based on addition of brackets from last review

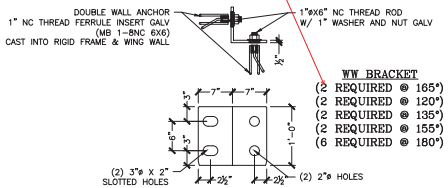

WW BRACKET
(2 REQUIRED @ 165°)
(2 REQUIRED @ 120°)
(2 REQUIRED @ 135°)
(2 REQUIRED @ 155°)
(6 REQUIRED @ 180°)

PLATES TO BE MADE OF ¾" MILD STEEL, PLASMA CUT, AND BENT AS REQUIRED. (HOT DIPPED GALVANIZED AFTER BENDING)

3 S5.0 WINGWALL BRACKET DETAIL
1" = 1'-0"

Vermont Agency of Transportation
RECEIVED
CK'D BY TYLIN OK'D BY KMH
July 29, 2016
RESUBMIT Yes Rejected
BY kristin Higgins DATE 08/01/2016

TYLIN INTERNATIONAL
The stamped documents are hereby:
___ Approved
___ Approved as noted
_X_ Revise and resubmit
See transmittal for additional information as applicable.
This review is for general conformance with design concept only. Any deviation from the plans or specifications not clearly noted by the Contractor has not been reviewed. Review by the Engineer shall not relieve the Contractor of the contractual responsibility for any errors or deviation from the contract requirements.
Josh Olund 08/01/2016
Reviewer Date

No.	Date	Revisions	By

DESIGNED AND DETAILED BY:
DELTA
DELTA ENGINEERING, P.C.
860 HOOPER ROAD, ENDWELL, NY 13760-1594
VOICE: (607) 231-6000 FAX: (607) 231-6050

VT 100 Road Culvert
Duxbury, Vermont
Wingwall Details

Project No. 7347
Date 6/29/16
Designed by: DELTA
Drawn by: CSC
Checked by:
Scale: AS SHOWN

PREPARED FOR:
MICHIE CORPORATION, INC.
173 BUXTON INDUSTRIAL DRIVE-PO BOX 870
HUNTSVILLE, AL 35804
PHONE: 603-443-3253
FAX: 603-428-3218
603-428-7425

DWG NO.
S6.0

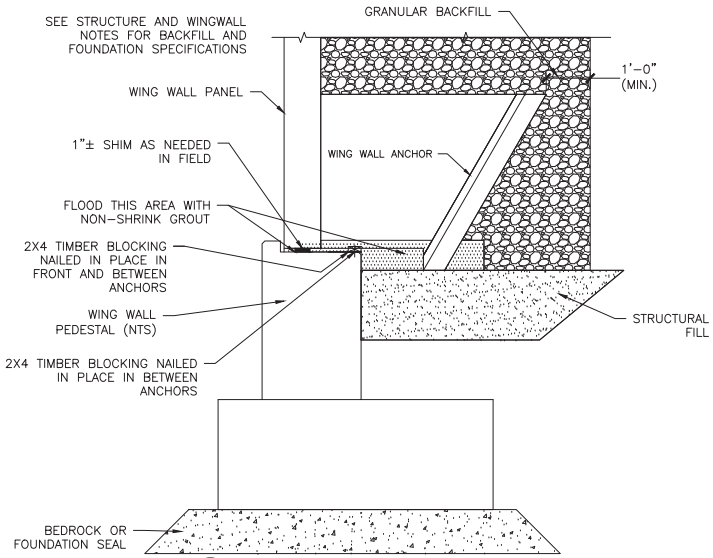

5 S7.0 FOOTING TO WW ATTACHMENT DETAIL

¾" = 1'-0"

NOTE: BAR COUNTS REPRESENT 1 UNIT.

WW1A REINFORCING SCHEDULE

BAR MARK	LOCATION	TYPE	SIZE/SPACING	CUT LENGTH	# OF PCS
VERTICAL	OSF	STRAIGHT	#5 @ 12"	12'-8" TO 10'-10"	9
VERTICAL	ISF	STRAIGHT	#5 @ 5"	12'-8" TO 10'-10"	22
HORIZONTAL	OSF	STRAIGHT	#5 @ 12"	9'-2"	13
HORIZONTAL	ISF	STRAIGHT	#5 @ 12"	8'-11"	13
DIAGONAL	FOLLOW SLOPE	STRAIGHT	#4	8'-10"	2

WW1B REINFORCING SCHEDULE

BAR MARK	LOCATION	TYPE	SIZE/SPACING	CUT LENGTH	# OF PCS
VERTICAL	OSF	STRAIGHT	#5 @ 12"	10'-10" TO 8'-10"	10
VERTICAL	ISF	STRAIGHT	#5 @ 5"	10'-10" TO 8'-10"	23
HORIZONTAL	OSF	STRAIGHT	#5 @ 12"	9'-2"	11
HORIZONTAL	ISF	STRAIGHT	#5 @ 12"	9'-2"	11
DIAGONAL	FOLLOW SLOPE	STRAIGHT	#4	9'-4"	2

WW2A REINFORCING SCHEDULE

BAR MARK	LOCATION	TYPE	SIZE/SPACING	CUT LENGTH	# OF PCS
VERTICAL	OSF	STRAIGHT	#5 @ 12"	7'-1" TO 3'-4"	10
VERTICAL	ISF	STRAIGHT	#5 @ 12"	7'-1" TO 3'-4"	10
HORIZONTAL	OSF	STRAIGHT	#5 @ 12"	6'-9"	8
HORIZONTAL	ISF	STRAIGHT	#5 @ 12"	9'-4"	8
DIAGONAL	FOLLOW SLOPE	STRAIGHT	#4	6'-0"	2

WW3A REINFORCING SCHEDULE

BAR MARK	LOCATION	TYPE	SIZE/SPACING	CUT LENGTH	# OF PCS
VERTICAL	OSF	STRAIGHT	#5 @ 12"	5'-8" TO 3'-7"	8
VERTICAL	ISF	STRAIGHT	#5 @ 12"	5'-8" TO 3'-7"	7
HORIZONTAL	OSF	STRAIGHT	#5 @ 12"	6'-7"	6
HORIZONTAL	ISF	STRAIGHT	#5 @ 12"	9'-2"	6
DIAGONAL	FOLLOW SLOPE	STRAIGHT	#4	9'-4"	2

WW4A REINFORCING SCHEDULE

BAR MARK	LOCATION	TYPE	SIZE/SPACING	CUT LENGTH	# OF PCS
VERTICAL	OSF	STRAIGHT	#5 @ 5"	12'-3" TO 10'-10"	10
VERTICAL	ISF	STRAIGHT	#5 @ 12"	12'-3" TO 10'-10"	10
HORIZONTAL	OSF	STRAIGHT	#5 @ 12"	9'-8"	12
HORIZONTAL	ISF	STRAIGHT	#5 @ 12"	9'-3"	12
DIAGONAL	FOLLOW SLOPE	STRAIGHT	#4	9'-4"	2

WW4B REINFORCING SCHEDULE

BAR MARK	LOCATION	TYPE	SIZE/SPACING	CUT LENGTH	# OF PCS
VERTICAL	OSF	STRAIGHT	#5 @ 5"	10'-10" TO 9'-4"	10
VERTICAL	ISF	STRAIGHT	#5 @ 12"	10'-10" TO 9'-4"	10
HORIZONTAL	OSF	STRAIGHT	#5 @ 12"	9'-8"	12
HORIZONTAL	ISF	STRAIGHT	#5 @ 12"	9'-8"	12
DIAGONAL	FOLLOW SLOPE	STRAIGHT	#4	9'-4"	2

WW4C REINFORCING SCHEDULE

BAR MARK	LOCATION	TYPE	SIZE/SPACING	CUT LENGTH	# OF PCS
VERTICAL	OSF	STRAIGHT	#5 @ 12"	9'-4" TO 7'-11"	10
VERTICAL	ISF	STRAIGHT	#5 @ 12"	9'-4" TO 7'-11"	10
HORIZONTAL	OSF	STRAIGHT	#5 @ 12"	9'-8"	10
HORIZONTAL	ISF	STRAIGHT	#5 @ 12"	9'-8"	10
DIAGONAL	FOLLOW SLOPE	STRAIGHT	#4	9'-4"	2

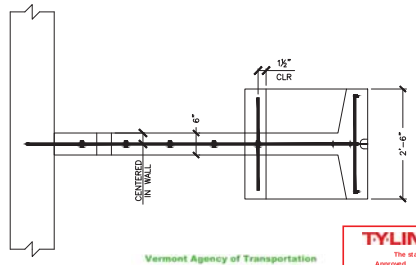

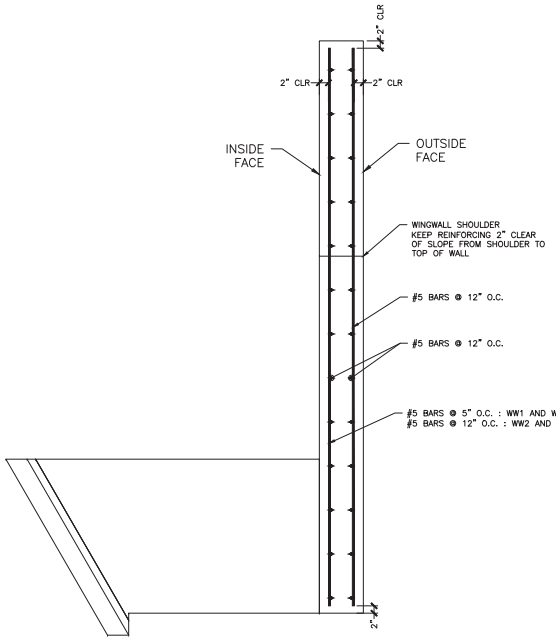

1 S7.0 WINGWALL REINFORCING (TYP)

¾" = 1'-0"

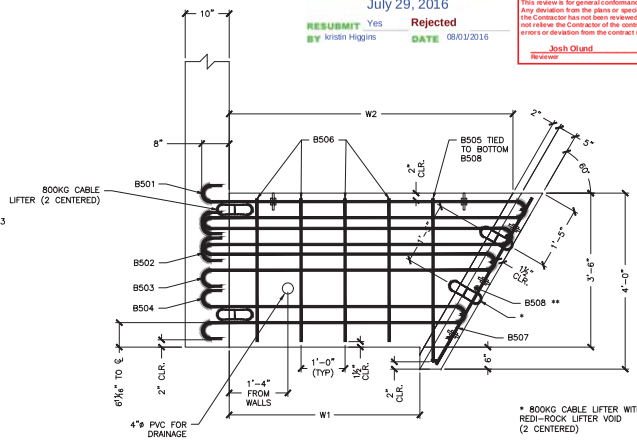

2 S7.0 ANCHOR DETAIL

¾" = 1'-0"

* 800KG CABLE LIFTER WITH REDI-ROCK LIFTER VOID (2 CENTERED)

** PLACE (1) B508 THROUGH EACH HOOP BARS, (1) CENTERED BETWEEN HOOP BARS 503 & 504, AND (2) BELOW B504 HOOP BAR W/ BOTTOM B508 2" CLEAR FROM BOTTOM (7 TOTAL)

Vermont Agency of Transportation
RECEIVED
CK'D BY TYLIN OK'D BY KMH
July 29, 2016
RESUBMIT Yes Rejected
BY Kristin Higgins DATE 08/01/2016

TYLIN INTERNATIONAL
The stamped documents are hereby:
___ Approved
___ Approved as noted
X Revise and resubmit
See transmittal for additional information as applicable.
This review is for general conformance with design concept only. Any deviation from the plans or specifications not clearly noted by the Contractor has not been reviewed. Review by the Engineer shall not relieve the Contractor of the contractual responsibility for any errors or deviation from the contract requirements.
Josh Olund 08/01/2016
Reviewer Date

5 REQ'D

ANCHOR TYPE "C"

CONCRETE QUANTITY		0.48 CY	
WEIGHT		2010 LB	
W1		2'-4"	
W2		4'-5⅝"	
X = 2'-8¾"	Y= 1'-8½"		

BAR LIST

MARK	QTY	SIZE	L	TYPE	LENGTH
B501	1	#5	5'-4½"	1	12'-1½"
B502	1	#5	5'-0½"	1	11'-5"
B503	1	#5	4'-8¼"	1	10'-9"
B504	1	#5	4'-0"	1	9'-4½"
B505	2	#5	3'-8½"	2	4'-7"
B506	4	#5	----	Str.	3'-3"
B507	4	#5	----	Str.	4'-4½"
B508	7	#5	----	Str.	2'-3"

1 REQ'D

ANCHOR TYPE "D"

CONCRETE QUANTITY		0.48 CY	
WEIGHT		2020 LB	
W1		3'-4"	
W2		5'-5⅝"	
X = 3'-5⅝"	Y= 1'-8½"		

BAR LIST

MARK	QTY	SIZE	L	TYPE	LENGTH
B501	1	#5	6'-4½"	1	14'-1½"
B502	1	#5	6'-0½"	1	13'-5"
B503	1	#5	5'-8¼"	1	12'-9"
B504	1	#5	5'-0"	1	11'-4½"
B505	2	#5	3'-8½"	2	4'-7"
B506	6	#5	----	Str.	3'-3"
B507	4	#5	----	Str.	4'-4½"
B508	7	#5	----	Str.	2'-3"

6 REQ'D

ANCHOR TYPE "E"

CONCRETE QUANTITY		0.61 CY	
WEIGHT		2550 LB	
W1		4'-4"	
W2		6'-5⅝"	
X = 4'-0"	Y= 1'-8⅝"		

BAR LIST

MARK	QTY	SIZE	L	TYPE	LENGTH
B501	1	#7	7'-4½"	1	16'-1½"
B502	1	#7	7'-0½"	1	15'-5"
B503	1	#7	6'-8¼"	1	14'-9"
B504	1	#5	6'-0"	1	13'-4½"
B505	2	#5	3'-8½"	2	4'-8¾"
B506	8	#5	----	Str.	3'-3"
B507	4	#5	----	Str.	4'-4½"
B508	7	#5	----	Str.	2'-3"

2 REQ'D

ANCHOR TYPE "F"

CONCRETE QUANTITY		0.68 CY	
WEIGHT		2860 LB	
W1		5'-4"	
W2		7'-5⅝"	
X = 4'-7⅝"	Y= 1'-8⅝"		

BAR LIST

MARK	QTY	SIZE	L	TYPE	LENGTH
B501	1	#7	8'-4½"	1	18'-1½"
B502	1	#7	8'-0½"	1	17'-5"
B503	1	#7	7'-8¼"	1	16'-9"
B504	1	#7	7'-0"	1	15'-4½"
B505	2	#5	3'-8½"	2	4'-8¾"
B506	10	#5	----	Str.	3'-3"
B507	4	#5	----	Str.	4'-4½"
B508	7	#5	----	Str.	2'-3"

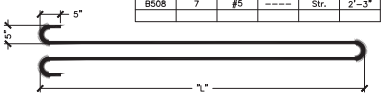

TYPE 1

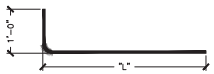

TYPE 2

No.	Date	Revisions	By

DESIGNED AND DETAILED BY:
DELTA ENGINEERING
860 HOOPER ROAD, ENDWELL, NY 13760-1594
VOICE: (607) 231-6000 FAX: (607) 231-6050

VT 100 Road Culvert
Duxbury, Vermont

Anchor Details

Scale: AS SHOWN
Checked by:
Drawn by: CSC
Designed by: DELTA
Project No. 7347
Date: 6/29/16

PREPARED FOR:
MICHIE CORPORATION, INC.
173 BUXTON INDUSTRIAL DRIVE-PO BOX 870
HUNTSVILLE, AL 35804
PHONE: 256-345-3232
FAX: 903-428-7425

DWG NO.
S7.0

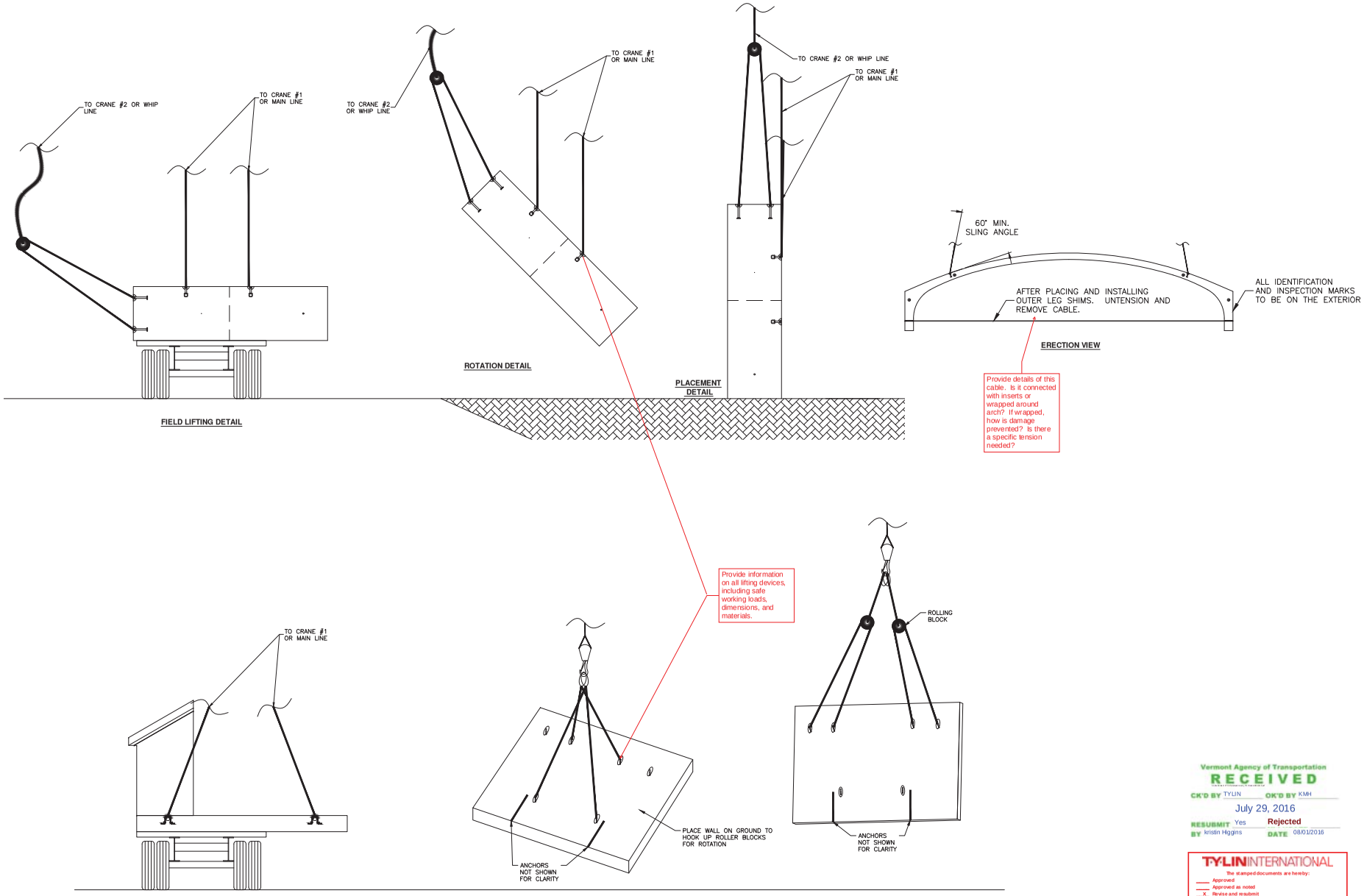

Vermont Agency of Transportation
RECEIVED
CK'D BY TYLIN OK'D BY KMH
July 29, 2016
RESUBMIT BY Yes Kristin Higgins
Rejected
DATE 08/01/2016

TYLIN INTERNATIONAL
The stamped documents are hereby:
____ Approved
____ Approved as noted
_X_ Revise and resubmit
See transmittal for additional information as applicable.
This review is for general conformance with design concept only. Any deviation from the plans or specifications not clearly noted by the Contractor has not been reviewed. Review by the Engineer shall not relieve the Contractor of the contractual responsibility for any errors or deviation from the contract requirements.
Josh Olund 08/01/2016
Reviewer Date

No.	Date	Revision	By

7/25/16

DESIGNED AND DETAILED BY:
DELTA
DELTA ENGINEERS, P.C.
860 HOOPER ROAD, ENDWELL, NY 13760-1594
VOICE: (607) 231-6000 FAX: (607) 231-6050

VT 100 Road Culvert
Duxbury, Vermont

Lifting Details

Scale: AS SHOWN
Checked by:
Drawn by: CSC
Designed by: DELTA
Date: 6/29/16
Project No. 7347

PREPARED FOR:
MICHIE CORPORATION, INC.
173 BUXTON INDUSTRIAL DRIVE-PO BOX 870
PITTSFIELD, ME 04967
PHONE: 800-341-8522
FAX: 603-428-7425

DWG NO.
S8.0