DESIGN COMPUTATIONS FOR

VAOT bf 013-4(47)
28' x 8' Archcon with Anchor Wingwalls
Duxbury, VT

PREPARED FOR:

Michie Corporation
PO Box 870
Henniker, New Hampshire 03242

PREPARED BY:

DELTA
ENGINEERS, ARCHITECTS, & LAND SURVEYORS
860 Hooper Road, Endwell, New York 13760
TEL: 607-231-6600 FAX: 607-231-6650
EMAIL: precast@delta-eas.com
www.delta-eas.com

STATE OF VERMONT
DARYL D. BURNS
No. 9031
Structural I
LICENSED
PROFESSIONAL ENGINEER

7-28-16

DELTA
ENGINEERS, ARCHITECTS, & LAND SURVEYORS
860 Hooper Road, Endwell, NY 13760
www.deltaengineers.com
Phone: (607) 231-6600
Fax: (607) 231-6650

JOB 2016.059.009
DESCIPTION 28x8u8.6
SHEET NO. ____ OF ____ SCALE ____
CALCULATED BY ____ DATE 7/27/2016
CHECKED BY ____ DATE ____

SUMMARY OF BRIDGE RATING

TOWN: Duxbury, VT

BRIDGE NO.: 7

CARRIES: VT 100

OVER: Crossett Brook

PORJECT NO.: BF 013-4(47)

DESIGN LIVE LOAD	AASHTO HL-93
DESIGN SPAN	28 FEET
REINFORCING STEEL	60 KSI
CONCRETE	6000 PSI
DESIGN SOIL UNIT WEIGHT	140 PCF

LOAD RATING							
LOADING LEVELS	H-20	HL-93	3S2	6AT	3A	4AS	5AS
INVENTORY	5.40	1.08	3.52	1.62	2.39	2.00	3.66
OPERATING	7.01	1.40	4.57	2.09	3.10	2.60	4.75
COMMENTS	28x8 ARCH UNDER 8.6' FILL						

Des. By: RJA Chk. By: GSC

DELTA
ENGINEERS, ARCHITECTS, & LAND SURVEYORS
860 Hooper Road, Endwell, NY 13760
www.deltaengineers.com
Phone: (607) 231-6600
Fax: (607) 231-6650

JOB	2016.059.009
DESCIPTION	28x8u8.6
SHEET NO.	____ OF ____ SCALE ____
CALCULATED BY	____ DATE 7/21/2016
CHECKED BY	____ DATE ____

Lane load to input into CANDE

earth cover	8.6	ft.
span	28	ft
rise	8	ft
leg thickness	12	in.
additional dead load	35	psf
lane load	64	psf

deck thickness	10	in
leg thickness	12	in

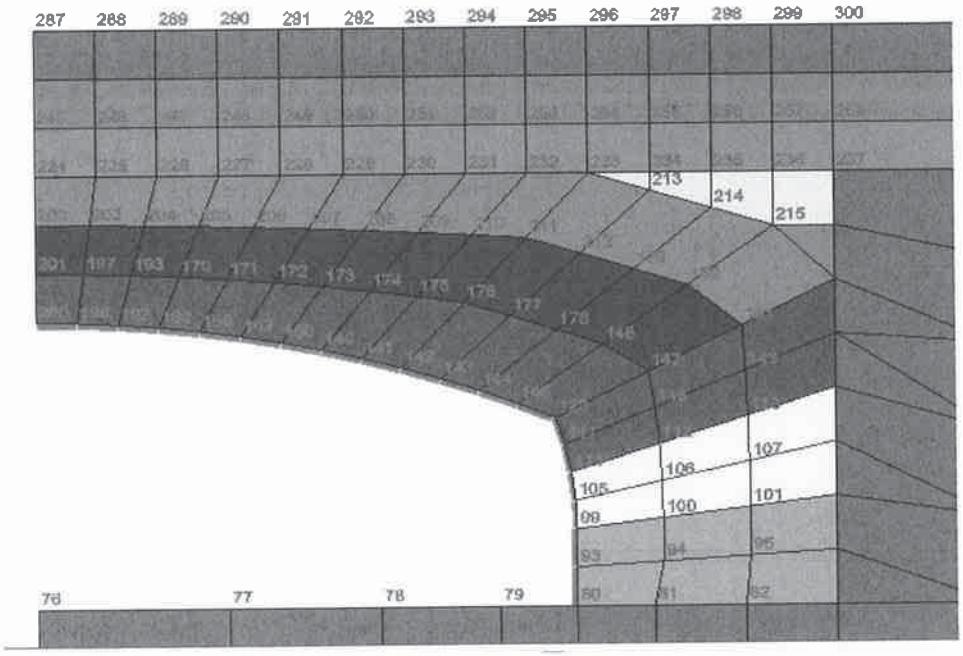

apply lane load as point load at top nodes

Node	coordinate	tributary width	dead load / node	lane load / node	
287	0 in.	1.654 ft.	2.412 lbs / in	4.411 lbs / in	<=== Cande doubles
288	19.85 in.	1.653 ft.	4.822 lbs / in	8.818 lbs / in	center load, so this is
289	39.69 in.	1.654 ft.	4.825 lbs / in	8.822 lbs / in	1/2 regular trib load
290	59.54 in.	1.653 ft.	4.822 lbs / in	8.818 lbs / in	
291	79.38 in.	1.654 ft.	4.825 lbs / in	8.822 lbs / in	
292	99.23 in.	1.654 ft.	4.825 lbs / in	8.822 lbs / in	
293	119.1 in.	1.653 ft.	4.822 lbs / in	8.818 lbs / in	
294	138.9 in.	1.654 ft.	4.825 lbs / in	8.822 lbs / in	
295	158.8 in.	1.654 ft.	4.825 lbs / in	8.822 lbs / in	
296	178.6 in.	1.653 ft.	4.822 lbs / in	8.818 lbs / in	
297	198.5 in.	1.654 ft.	4.825 lbs / in	8.822 lbs / in	live load from here out becomes
298	218.3 in.	1.653 ft.	4.822 lbs / in	8.818 lbs / in	beneficial and is neglected
299	238.2 in.	1.654 ft.	4.825 lbs / in	8.822 lbs / in	dead load is applied because
300	258 in.				it is a perminant load

Des. By: RJA Chk. By: GSC

DELTA
ENGINEERS, ARCHITECTS, & LAND SURVEYORS
860 Hooper Road, Endwell, NY 13760
www.deltaengineers.com
Phone: (607) 231-6600
Fax: (607) 231-6650

JOB	2016.059.009
DESCIPTION	28x8u8.6
SHEET NO.	OF
SCALE	
CALCULATED BY	
DATE	7/21/2016
CHECKED BY	
DATE	

span	28 ft.	MPF	1.2
earth cover over structure	8.6 ft.	impact = 33*(1-0.125*earth cover) =	0 %
axle width	6 ft	# of steps to divide load over in Cande =	4
wheel width	20 in.	live load distribution factor thru fill =	1.15

axle distribution width = axle width + wheel width + earth cover * dist factor thru fill = 17.56 feet

axle load to input into Cande = axle weight*impact*MPF/distribution width/12" per ft/# of load steps

LOAD RATING VEHICLES

HL-93 TRUCK
72 KIPS (36 TONS)
0.64 K/L.F. LANE LOAD

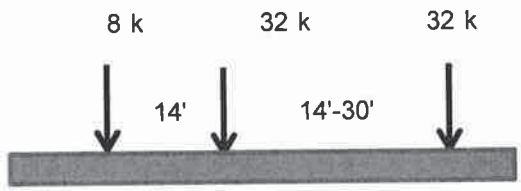

axle load to put into Cande

8 k =	11.39 lb/inch/step
32 k =	45.57 lb/inch/step

HL-93 TANDEM
50 KIPS (25 TONS)
0.64 K/L.F. LANE LOAD

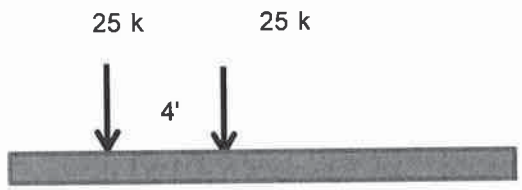

axle load to put into Cande

25 k =	35.6 lb/inch/step
25 k =	35.6 lb/inch/step

H20 VEHICLE
20 TONS TOTAL
(no lane load or MPF)
(for load rating)

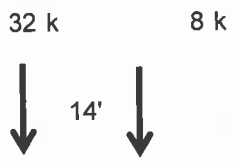

axle load to put into Cande

32 k =	37.97 lb/inch/step
8 k =	11.39 lb/inch/step

Des. By: RJA Chk. By: GSC

DELTA
ENGINEERS, ARCHITECTS, & LAND SURVEYORS
860 Hooper Road, Endwell, NY 13760
www.deltaengineers.com
Phone: (607) 231-6600
Fax: (607) 231-6650

JOB	2016.059.009		
DESCIPTION	28x8u8.6		
SHEET NO.	OF	SCALE	
CALCULATED BY	rja	DATE	7/27/2016
CHECKED BY		DATE	

span	28 ft
leg thickness	12 inches

HL-93 AXLE AND HS-20

case 1

axle applied to centerline

case 2

axle applied to quarter point only

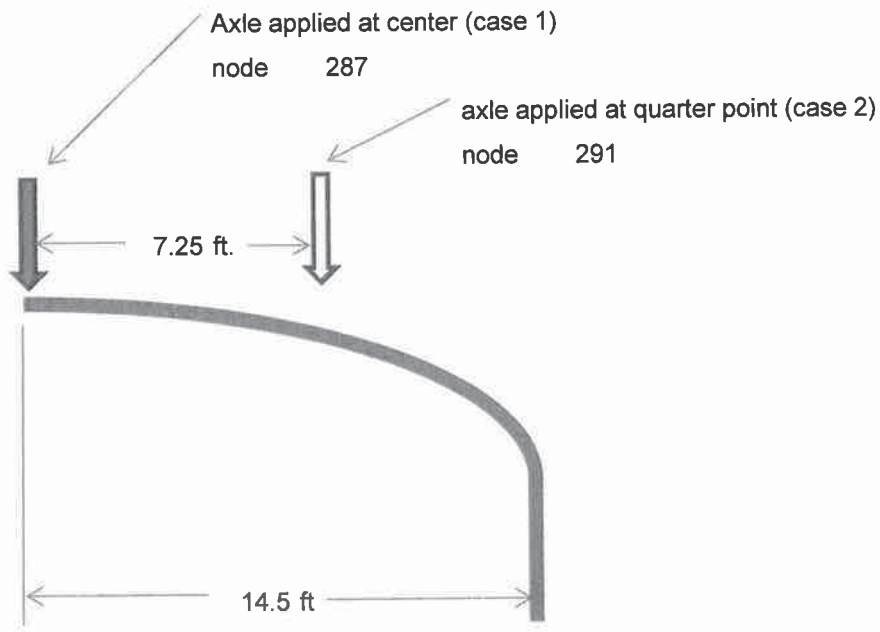

HL-93 TANDEM

case 3

tandem applied at centerline

case 4

tandem applied at quarter point

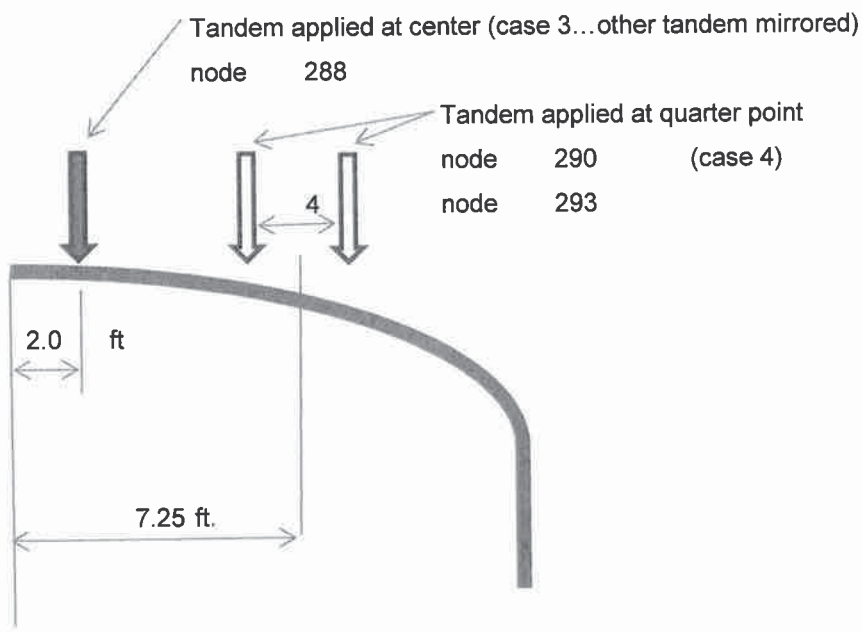

Des. By: RJA Chk. By: GSC

DELTA
ENGINEERS, ARCHITECTS, & LAND SURVEYORS
860 Hooper Road, Endwell, NY 13760
www.deltaengineers.com
Phone: (607) 231-6600
Fax: (607) 231-6650

JOB	2016.059.009		
DESCIPTION	28x8u8.6		
SHEET NO.	OF	SCALE	
CALCULATED BY	GSC	DATE	7/28/2016
CHECKED BY		DATE	

HL93 truck 8.6 ft earth cover (controls)

See design calculations for HL-93 and HL-93 w/ Tandem for rating information.

Load Case	Description
1	HL93 truck at center
2	HL93 truck at quarter point
3	HL93 truck w/ tandem at center
4	HL93 truck w/ tandem at quarter point

Boundary conditions

Case 1			Case 2			Case 3			Case 4		
node	step	force	node	step	force	node	step	force	node	step	force
287	12	-22.80	291	12	-46.00	288	12	-35.60	290	12	-35.60
287	13	-22.80	291	13	-46.00	288	13	-35.60	290	13	-35.60
287	14	-22.80	291	14	-46.00	288	14	-35.60	290	14	-35.60
287	15	-22.80	291	15	-46.00	288	15	-35.60	290	15	-35.60
293	12	0.00	293	12	0.00	293	12	0.00	293	12	-35.60
293	13	0.00	293	13	0.00	293	13	0.00	293	13	-35.60
293	14	0.00	293	14	0.00	293	14	0.00	293	14	-35.60
293	15	0.00	293	15	0.00	293	15	0.00	293	15	-35.60
287	15	-7.00	287	15	-7.00	287	15	-7.00	287	15	-7.00
288	15	-14.00	288	15	-14.00	288	15	-14.00	288	15	-14.00
289	15	-14.00	289	15	-14.00	289	15	-14.00	289	15	-14.00
290	15	-14.00	290	15	-14.00	290	15	-14.00	290	15	-14.00
291	15	-14.00	291	15	-14.00	291	15	-14.00	291	15	-14.00
292	15	-14.00	292	15	-14.00	292	15	-14.00	292	15	-14.00
293	15	-14.00	293	15	-14.00	293	15	-14.00	293	15	-14.00
294	15	-14.00	294	15	-14.00	294	15	-14.00	294	15	-14.00
295	15	-14.00	295	15	-14.00	295	15	-14.00	295	15	-14.00
296	15	-14.00	296	15	-14.00	296	15	-14.00	296	15	-14.00

capacity demand ratio

	Case 1		Case 2		Case 3		Case 4		
failure mode	node	ratio	node	ratio	node	ratio	node	ratio	
steel yeilding	1	0.766	17	0.805	1	0.869	17	0.896	
concrete crushing	17	0.774	17	0.797	17	0.822	17	0.857	controls
shear failure	17	1.025	17	1.069	17	1.118	17	1.168	
radial tension failure	1	0.119	1	0.119	1	0.135	1	0.132	

Des. By: RJA Chk. By: GSC

ADELTA
ENGINEERS, ARCHITECTS, & LAND SURVEYORS
860 Hooper Road, Endwell, NY 13760
www.deltaengineers.com
Phone: (607) 231-6600
Fax: (607) 231-6650

JOB	2016.059.009
DESCRIPTION	28x8 under 8: HL93 Case 4
SHEET NO.	OF
SCALE	
CALCULATED BY	
DATE	
CHECKED BY	
DATE	

LRFR LOAD RATING - HL93 Case 4

Technical Data & Load Factors

Culvert Span (S) =	29.00 ft.	(C to C)	
Crown Radius (Rad) =	33.83 ft.		
Bar Cover			
Outside Face (Cov_{out}) =	2.00 in		
Inside Face (Cov_{in}) =	1.50 in		
Design Section Length (b) =	12 in		
Compressive Strength (f_c) =	6.5 ksi		
Yield Strength (f_y) =	60 ksi		
Stirrup Yield Strength (f_{ystir}) =	60 ksi		
Circumferential Reinforcement Spa. (spa.) =	5.00 in		
Circumferential Reinforcement Provided (n) =	1	(n=1 for 1 layer, n=2 for multiple layers)	AASHTO
Reinforcement Type (Type) =	3	AASHTO Table 12.10.4.4d-1	12.10.4.2.4d

1 - smooth wire or plain bar
2 - WWF (8" max spa. Smooth)
3 - WWF (deformed) or bar (deformed)

Resistance Factors:

ϕf - Flexure =	1.00	AASHTO Table 12.5.5-1
ϕr - Radial Tension =	0.90	
ϕv - Diag Tension =	0.90	
Radial Tension Process (F_{rp}) =	1.00	AASHTO 12.10.4.2.3
Diag Tension Process (F_{vp}) =	1.00	

Load Factors:

	IR	OR	
LL Factor	1.75	1.35	load modification factors already applied to magnitude
γ_pDC (component)	1.31	(1.25*1.05)	
γ_pEH (hor. At rest earth pressure)	0.86	(0.9/1.05)	
γ_pEV	1.37	(1.3*1.05)	
State Trucks		1.45	(ADTT = 280)

Des. By: RJA Chk. By: GSC

DELTA
ENGINEERS, ARCHITECTS, & LAND SURVEYORS
860 Hooper Road, Endwell, NY 13760
www.deltaengineers.com
Phone: (607) 231-6600
Fax: (607) 231-6650

JOB	2016.059.009		
DESCRIPTION	28x8 under 8: HL93 Case 4		
SHEET NO.		OF	
CALCULATED BY	GSC	DATE	7/21/2016
CHECKED BY		DATE	

Design Force Summary

	Factored DC+EV+EH			Max Factored Total Load			Max Factored LL			
Node Number	Factored Thrust Nu (k/ft)	Factored Moment Mu (k-in/ft)	Factored Shear Vu (k/ft)	Factored Thrust Nu (k/ft)	Factored Moment Mu (k-in/ft)	Factored Shear Vu (k/ft)	Factored Thrust Nu (k/ft)	Factored Moment Mu (k-in/ft)	Factored Shear Vu (k/ft)	Thk at node (in)
1	-22.14	275.22	-0.03	-27.23	360.20	-0.06	-5.09	84.98	-0.02	10.000
2	-22.37	270.08	0.80	-27.49	353.94	0.99	-5.12	83.86	0.19	10.000
3	-22.70	253.74	1.66	-27.87	333.65	2.09	-5.16	79.91	0.44	10.000
4	-23.24	225.56	2.58	-28.48	297.74	3.33	-5.24	72.18	0.75	10.000
5	-23.93	184.46	3.59	-29.29	244.21	4.72	-5.36	59.75	1.13	10.000
6	-24.72	129.08	4.72	-30.25	170.90	6.28	-5.53	41.82	1.56	10.000
7	-25.60	57.57	6.00	-31.34	75.45	8.01	-5.74	17.88	2.01	10.000
8	-26.56	-32.02	7.43	-32.58	-44.28	9.89	-6.02	-12.26	2.47	10.063
9	-27.58	-141.89	9.02	-33.93	-190.32	11.92	-6.35	-48.43	2.90	10.063
10	-28.61	-274.38	10.77	-35.35	-364.46	14.06	-6.74	-90.08	3.29	10.688
11	-29.66	-431.26	12.63	-36.82	-567.95	16.26	-7.16	-136.69	3.63	12.375
12	-30.77	-613.57	14.55	-38.35	-801.07	18.46	-7.58	-187.50	3.90	15.250
13	-31.95	-822.16	16.58	-39.94	-1063.70	20.69	-8.00	-241.55	4.11	19.250
14	-35.06	-1058.99	1.91	-43.56	-1356.84	2.05	-8.51	-297.85	0.15	27.000
15	-37.39	-930.06	-14.57	-46.07	-1191.56	-18.71	-8.67	-261.50	-4.14	19.813
16	-36.98	-787.22	-16.06	-45.39	-1007.87	-20.64	-8.41	-220.64	-4.58	15.438
17	-36.44	-630.60	-17.49	-44.58	-806.66	-22.42	-8.14	-176.06	-4.93	12.875
18	-36.33	-461.04	-17.83	-44.27	-589.70	-22.79	-7.94	-128.66	-4.96	12.000
19	-36.77	-225.56	-17.11	-44.69	-289.14	-21.89	-7.91	-63.58	-4.78	12.000
20	-37.29	0.00	-16.38	-45.25	0.00	-21.04	-7.96	0.00	-4.66	12.000

Note: "-" thrust indicate compression

Des. By: RJA Chk. By: GSC

DELTA
ENGINEERS, ARCHITECTS, & LAND SURVEYORS
860 Hooper Road, Endwell, NY 13760
www.deltaengineers.com
Phone: (607) 231-6600
Fax: (607) 231-6650

JOB	2016.059.009		
DESCRIPTION	28x8 under 8: HL93 Case 4		
SHEET NO.	OF	SCALE	
CALCULATED BY	GSC	DATE	7/21/2016
CHECKED BY		DATE	

LRFR LOAD RATING - HL93 Case 4

Node	Total Fac.	Factored DC+EH+EV			Factored LL			
Number	Nu (k/ft)	Nu_D (k/ft)	Mu_D (in-k/ft)	Vu_D (k/ft)	Nu_{LL} (k/ft)	$+Mu_{LL}$ (in-k/ft)	Vu_{LL} (k/ft)	Thick (in)
1	-27.23	-22.14	275.22	0.03	-5.09	84.98	0.02	10
2	-27.49	-22.37	270.08	0.80	-5.12	83.86	0.19	10
3	-27.87	-22.70	253.74	1.66	-5.16	79.91	0.44	10
4	-28.48	-23.24	225.56	2.58	-5.24	72.18	0.75	10
5	-29.29	-23.93	184.46	3.59	-5.36	59.75	1.13	10
6	-30.25	-24.72	129.08	4.72	-5.53	41.82	1.56	10
7	-31.34	-25.60	57.57	6.00	-5.74	17.88	2.01	10
8	-32.58	-26.56	-32.02	7.43	-6.02	-12.26	2.47	10.063
9	-33.93	-27.58	-141.89	9.02	-6.35	-48.43	2.90	10.063
10	-35.35	-28.61	-274.38	10.77	-6.74	-90.08	3.29	10.688
11	-36.82	-29.66	-431.26	12.63	-7.16	-136.69	3.63	12.375
12	-38.35	-30.77	-613.57	14.55	-7.58	-187.50	3.90	15.25
13	-39.94	-31.95	-822.16	16.58	-8.00	-241.55	4.11	19.25
14	-43.56	-35.06	-1058.99	1.91	-8.51	-297.85	0.15	27
15	-46.07	-37.39	-930.06	14.57	-8.67	-261.50	4.14	19.813
16	-45.39	-36.98	-787.22	16.06	-8.41	-220.64	4.58	15.438
17	-44.58	-36.44	-630.60	17.49	-8.14	-176.06	4.93	12.875
18	-44.27	-36.33	-461.04	17.83	-7.94	-128.66	4.96	12
19	-44.69	-36.77	-225.56	17.11	-7.91	-63.58	4.78	12
20	-45.25	-37.29	0.00	16.38	-7.96	0.00	4.66	12

note all shear values normalized to positive

Des. By: RJA Chk. By: GSC

DELTA
ENGINEERS, ARCHITECTS, & LAND SURVEYORS
860 Hooper Road, Endwell, NY 13760
www.deltaengineers.com
Phone: (607) 231-6600
Fax: (607) 231-6650

JOB	2016.059.009		
DESCRIPTION	28x8 under 8: HL93 Case 4		
SHEET NO.	OF	SCALE	
CALCULATED BY	GSC	DATE	7/21/2016
CHECKED BY		DATE	

Node Number	thk (in)	d (in)	As'in (prov'd) (in^2 / ft)	As'out (prov'd) (in^2 / ft)
1	10.0	8.00	0.92	0.24
2	10.0	8.00	0.92	0.24
3	10.0	8.00	0.92	0.24
4	10.0	8.00	0.92	0.24
5	10.0	8.00	0.92	0.24
6	10.0	8.00	0.92	0.24
7	10.0	8.00	0.92	0.24
8	10.1	7.56	0.92	0.24
9	10.1	7.56	0.92	1.06
10	10.7	8.19	0.24	1.06
11	12.4	9.88	0.48	1.56
12	15.3	12.75	0.48	1.56
13	19.3	16.75	0.48	1.56
14	27.0	24.50	0.48	1.56
15	19.8	17.31	0.48	1.56
16	15.4	12.94	0.48	1.56
17	12.9	10.38	0.48	1.56
18	12.0	9.50	0.48	1.56
19	12.0	9.50	0.48	1.06
20	12.0	9.50	0.48	1.06

Des. By: RJA Chk. By: GSC

DELTA
ENGINEERS, ARCHITECTS, & LAND SURVEYORS
860 Hooper Road, Endwell, NY 13760
www.deltaengineers.com
Phone: (607) 231-6600
Fax: (607) 231-6650

JOB	2016.059.009		
DESCRIPTION	28x8 under 8: HL93 Case 4		
SHEET NO.	OF	SCALE	
CALCULATED BY	GSC	DATE	7/21/2016
CHECKED BY		DATE	

LRFR LOAD RATING - HL93 Case 4

Node Number	thk (in)	d (in)	As (prov'd) (in^2 / ft)	Total Fac. Nu (k/ft)	Phi Mn (in-k/ft)
1	10.0	8.00	0.92	-27.23	523.84
2	10.0	8.00	0.92	-27.49	524.78
3	10.0	8.00	0.92	-27.87	526.15
4	10.0	8.00	0.92	-28.48	528.39
5	10.0	8.00	0.92	-29.29	531.32
6	10.0	8.00	0.92	-30.25	534.77
7	10.0	8.00	0.92	-31.34	538.70
8	10.1	7.56	0.24	-32.58	254.80
9	10.1	7.56	1.06	-33.93	572.58
10	10.7	8.19	1.06	-35.35	628.09
11	12.4	9.88	1.56	-36.82	1013.16
12	15.3	12.75	1.56	-38.35	1343.58
13	19.3	16.75	1.56	-39.94	1806.56
14	27.0	24.50	1.56	-43.56	2727.60
15	19.8	17.31	1.56	-46.07	1917.51
16	15.4	12.94	1.56	-45.39	1403.55
17	12.9	10.38	1.56	-44.58	1102.07
18	12.0	9.50	1.56	-44.27	999.54
19	12.0	9.50	1.06	-44.69	774.66
20	12.0	9.50	1.06	-45.25	777.03

AASHTO 12.10.4.2.4a

g = 0.85 b f'c = 61

$$\phi M_n = \frac{1}{2}\left[g(\phi_f d)^2 - Nu(2\phi_f d - h) - \frac{(g\phi_f d - N_u - A_s F_y)^2}{g} \right]$$

Des. By: RJA Chk. By: GSC

DELTA
ENGINEERS, ARCHITECTS, & LAND SURVEYORS
860 Hooper Road, Endwell, NY 13760
www.deltaengineers.com
Phone: (607) 231-6600
Fax: (607) 231-6650

JOB	2016.059.009		
DESCRIPTION	28x8 under 8: HL93 Case 4		
SHEET NO.	OF	SCALE	
CALCULATED BY	GSC	DATE	7/21/2016
CHECKED BY		DATE	

LRFR LOAD RATING - HL93 Case 4

Node Number	thk (in)	d (in)	Phi Mn (in-k/ft)	Mu_D (in-k/ft)	$+Mu_{LL}$ (in-k/ft)	Inventory Rating	Operating Rating
1	10.0	8.00	523.84	275.22	84.98	2.93	3.79
2	10.0	8.00	524.78	270.08	83.86	3.04	3.94
3	10.0	8.00	526.15	253.74	79.91	3.41	4.42
4	10.0	8.00	528.39	225.56	72.18	4.20	5.44
5	10.0	8.00	531.32	184.46	59.75	5.81	7.53
6	10.0	8.00	534.77	129.08	41.82	9.70	12.57
7	10.0	8.00	538.70	57.57	17.88	26.91	34.89
8	10.1	7.56	254.80	-32.02	-12.26	18.18	23.56
9	10.1	7.56	572.58	-141.89	-48.43	8.89	11.53
10	10.7	8.19	628.09	-274.38	-90.08	3.93	5.09
11	12.4	9.88	1013.16	-431.26	-136.69	4.26	5.52
12	15.3	12.75	1343.58	-613.57	-187.50	3.89	5.05
13	19.3	16.75	1806.56	-822.16	-241.55	4.08	5.28
14	27.0	24.50	2727.60	-1058.99	-297.85	5.60	7.26
15	19.8	17.31	1917.51	-930.06	-261.50	3.78	4.89
16	15.4	12.94	1403.55	-787.22	-220.64	2.79	3.62
17	12.9	10.38	1102.07	-630.60	-176.06	2.68 ✓	3.47 ✓
18	12.0	9.50	999.54	-461.04	-128.66	4.19	5.43
19	12.0	9.50	774.66	-225.56	-63.58	8.64	11.20
20	12.0	9.50	777.03	0.00	0.00	N/A	N/A
					Controlling	**2.68**	**3.47**

g = 0.85 b f'c = 61

$$\phi M_n = \frac{1}{2}\left[g(\phi_f d)^2 - Nu(2\phi_f d - h) - \frac{(g\phi_f d - N_u - A_s F_y)^2}{g} \right]$$

Des. By: RJA Chk. By: GSC

DELTA ENGINEERS
184 Court Street
BINGHAMTON, NEW YORK 13901
(607) 231-6600 Fax 231-6650

JOB	2016.059.009		
DESCRIPTION	28x8 under 8: HL93 Case 4		
SHEET NO.	OF	SCALE	
CALCULATED BY	GSC	DATE	7/21/2016
CHECKED BY		DATE	

LRFR LOAD RATING - HL93 Case 4

Elmt Nmbr	thk (in)	d (in)	As (prov'd) (in^2 / ft)	Vtotal (kip/ft)	Vdl only (kip/ft)	Vll only (kip/ft)	Vn=Vc+Vs ϕVn (kip/ft)	1.75 INV	1.35 OPR
1	10.0	8.000	0.92	0.06	0.03	0.02	12.93	574.6	744.9
2	10.0	8.000	0.92	0.99	0.80	0.19	12.94	64.12	83.11
3	10.0	8.000	0.92	2.09	1.66	0.44	12.96	25.97	33.67
4	10.0	8.000	0.92	3.33	2.58	0.75	12.99	13.87	17.98
5	10.0	8.000	0.92	4.72	3.59	1.13	13.03	8.348	10.82
6	10.0	8.000	0.92	6.28	4.72	1.56	13.77	5.802	7.522
7	10.0	8.000	0.92	8.01	6.00	2.01	31.10	12.47	16.17
8	10.1	7.563	0.24	9.89	7.43	2.47	29.61	8.988	11.65
9	10.1	7.563	1.06	11.92	9.02	2.90	21.55	4.323	5.604
10	10.7	8.188	1.06	14.06	10.77	3.29	15.53	1.448	1.877
11	12.4	9.875	1.56	16.26	12.63	3.63	18.45	1.605	2.08
12	15.3	12.750	1.56	18.46	14.55	3.90	20.52	1.527	1.98
13	19.3	16.750	1.56	20.69	16.58	4.11	24.12	1.835	2.379
14	27.0	24.500	1.56	2.05	1.91	0.15	30.37	193	250.2
15	19.8	17.313	1.56	18.71	14.57	4.14	24.41	2.377	3.081
16	15.4	12.938	1.56	20.64	16.06	4.58	21.01	1.081 ✓	1.402
17	12.9	10.375	1.56	22.42	17.49	4.93	47.69	6.125	7.94
18	12.0	9.500	1.56	22.79	17.83	4.96	47.90	6.066	7.864
19	12.0	9.500	1.06	21.89	17.11	4.78	57.25	8.403	10.89
20	12.0	9.500	1.06	21.04	16.38	4.66	64.14	10.24	13.28
							controling:	**1.081**	**1.402**

$$F_d = 0.8 + \frac{1.6}{d} \le 1.3$$

$$F_n = 1 + \frac{N_u}{24 * thk}$$

$$\rho = \frac{A_s}{\phi bd} \le 0.02$$

$$\phi V_n = \phi 0.0316 b d F_{vp} \sqrt{f'c}\left(1.1 + 63\rho\right)\left(\frac{F_d F_n}{F_c}\right)$$

$$F_c = 1 \pm \left(\frac{d}{2 * rad}\right)$$

Shear Resistance With Stirrups **AASHTO 12.10.4.2.5**

Des. By: RJA Chk. By: GSC

DELTA ENGINEERS
184 Court Street
BINGHAMTON, NEW YORK 13901
(607) 231-6600 Fax 231-6650

JOB	2016.059.009		
DESCRIPTION	28x8 under 8: HL93 Case 4		
SHEET NO.	OF	SCALE	0
CALCULATED BY	GSC	DATE	7/21/2016
CHECKED BY		DATE	

Arch Design

Positive Moment Design (cont.)

Shear Resistance With Radial Stirrups **AASHTO 12.10.4.2.6**

Element Number	thk (in)	d (in)	Sv MAX (in)	Sv Act (in)	Avr (in^2 / ft)	Sv MAX (in)	Sv Act (in)	Avs (in^2 / ft)	ϕVs (k/ft)
1	10.0	8.13	5.48	0.00	0.00	5.48	0.00	0.00	0
2	10.0	8.13	5.48	0.00	0.00	5.48	0.00	0.00	0
3	10.0	8.13	5.48	0.00	0.00	5.48	0.00	0.00	0
4	10.0	8.13	5.48	0.00	0.00	5.48	0.00	0.00	0
5	10.0	8.13	5.48	0.00	0.00	5.48	0.00	0.00	0
6	10.0	8.13	5.48	0.00	0.00	5.48	0.00	0.00	0
7	10.0	8.13	5.48	0.00	0.00	5.48	0.00	0.00	0
8	10.1	7.69	5.19	0.00	0.00	5.19	0.00	0.00	0
9	10.1	7.69	5.19	0.00	0.00	5.19	0.00	0.00	0
10	10.7	8.31	5.61	0.00	0.00	5.61	0.00	0.00	0
11	12.4	10.00	6.75	0.00	0.00	6.75	0.00	0.00	0
12	15.3	12.88	8.69	0.00	0.00	8.69	0.00	0.00	0
13	19.3	16.88	11.39	0.00	0.00	11.39	0.00	0.00	0
14	27.0	24.63	16.62	0.00	0.00	16.62	0.00	0.00	0
15	19.8	17.44	11.77	0.00	0.00	11.77	0.00	0.00	0
16	15.4	13.06	8.82	0.00	0.00	8.82	0.00	0.00	0
17	12.9	10.50	7.09	4.50	0.01	7.09	4.50	0.06	28.49
18	12.0	9.63	6.50	4.50	0.01	6.50	4.50	0.08	26.42
19	12.0	9.63	6.50	4.50	0.00	6.50	4.50	0.06	27.08
20	12.0	9.63	6.50	4.50	0.00	6.50	4.50	0.05	26.94

For Radial Tension

$$A_{vr} = \frac{1.1 s_v \left(M_u - 0.45 N_u \phi_r d\right)}{f_y r_s \phi_r d}$$

$$s_v \le 0.75 \phi_r d$$

For Shear

$$A_{vs} = \frac{1.1 s_v}{f_y \phi_v d}\left(V_u F_c - V_c\right) + A_{vr}$$

$$V_c = \frac{4V_r}{\frac{M_{nu}}{V_u d} + 1} \le 0.0633 \phi_v b d \sqrt{f'_c}$$

Mnu=Mu-Nu(4h-d)/8

rearanging Avs equation above and

taking Fc =1.0, Vs = (Avs-Avr)*Fys*ϕv*d/(1.1*Sv) (≤8*√F'c*Bw*d)

(#3@4.5")

As provided = 0.293 sq.in. / L.F.

Des. By: RJA Chk. By: GSC

DELTA
ENGINEERS, ARCHITECTS, & LAND SURVEYORS
860 Hooper Road, Endwell, NY 13760
www.deltaengineers.com
Phone: (607) 231-6600
Fax: (607) 231-6650

JOB	2016.059.009		
DESCIPTION	28x8u8.6		
SHEET NO.	OF	SCALE	
CALCULATED BY		DATE	7/21/2016
CHECKED BY		DATE	

HS20 truck 8.6 ft earth cover (controls)

Load Case	Description
1	HS20 truck at center
2	HS20 truck at quarter point

Boundary conditions

Case 1			Case 2		
node	step	force	node	step	force
287 ✓	12	-19.00 ✓	291 ✓	12	-37.80 ✓
287	13	-19.00	291	13	-37.80
287	14	-19.00	291	14	-37.80
287	15	-19.00	291	15	-37.80
293	12	0.00	293	12	0.00
293	13	0.00	293	13	0.00
293	14	0.00	293	14	0.00
293	15	0.00	293	15	0.00
287	15	0.00	287	15	0.00
288	15	0.00	288	15	0.00
289	15	0.00	289	15	0.00
290	15	0.00	290	15	0.00

capacity demand ratio

	Case 1		Case 2		
failure mode	node	ratio	node	ratio	
steel yeilding	17	0.696	17	0.727	
concrete crushing	17	0.732	17	0.751	controls
shear failure	17	0.941	17	0.977	↵
radial tension failure	1	0.106	1	0.105	

Des. By: RJA Chk. By: GSC

*** WELCOME TO CANDE-2013(version 3/1/2013) ***

MASTER CONTROL AND PIPE-TYPE DATA FOR PROBLEM # 1

USER TITLE: 28x8_u8.6_HS20c1

* * * BOUNDARY CONDITIONS * * *
(FORCES = LBS; DISPLACEMENTS = INCHES; ROTATIONS = DEGREES)

BOUNDARY BEAM NODE	LOAD STEP	X-FORCE OR X-DISPLACEMENT	Y-FORCE OR Y-DISPLACEMENT	X-Y ROTATION ROTATIONAL BOUNDARY CONDITIONS
287	12	F = 0.0000E+00	F = -0.1900E+02	0.0000E+00
287	13	F = 0.0000E+00	F = -0.1900E+02	0.0000E+00
287	14	F = 0.0000E+00	F = -0.1900E+02	0.0000E+00
287	15	F = 0.0000E+00	F = -0.1900E+02	0.0000E+00
293	12	F = 0.0000E+00	F = 0.0000E+00	0.0000E+00
293	13	F = 0.0000E+00	F = 0.0000E+00	0.0000E+00
293	14	F = 0.0000E+00	F = 0.0000E+00	0.0000E+00
293	15	F = 0.0000E+00	F = 0.0000E+00	0.0000E+00
287	15	F = 0.0000E+00	F = 0.0000E+00	0.0000E+00
288	15	F = 0.0000E+00	F = 0.0000E+00	0.0000E+00
289	15	F = 0.0000E+00	F = 0.0000E+00	0.0000E+00
290	15	F = 0.0000E+00	F = 0.0000E+00	0.0000E+00
291	15	F = 0.0000E+00	F = 0.0000E+00	0.0000E+00
292	15	F = 0.0000E+00	F = 0.0000E+00	0.0000E+00
293	15	F = 0.0000E+00	F = 0.0000E+00	0.0000E+00
294	15	F = 0.0000E+00	F = 0.0000E+00	0.0000E+00
295	15	F = 0.0000E+00	F = 0.0000E+00	0.0000E+00
296	15	F = 0.0000E+00	F = 0.0000E+00	0.0000E+00

LRFD TOTAL LOAD FACTORS PER LOAD STEP

LOAD STEP	LOAD FACTOR	USER COMMENT
1	1.313	Factor for load step #1
2	0.875	Factor for load step #2
3	0.857	Factor for load step #3

4	0.857	Factor for load step #4
5	0.857	Factor for load step #5
6	1.365	Factor for load step #6
7	1.365	Factor for load step #7
8	1.365	Factor for load step #8
9	1.365	Factor for load step #9
10	1.365	Factor for load step #10
11	1.365	Factor for load step #11
12	1.750	Factor for load step #12
13	1.750	Factor for load step #13
14	1.750	Factor for load step #14
15	1.750	Factor for load step #15

\+ +

FINITE ELEMENT OUTPUT FOR LOAD STEP 15

\+ +

CONCRETE, FACTORED-EVALUATION FOR GROUP 1, LOAD-STEP 15

STRUCTURAL RESPONSES OF CONCRETE-GROUP 1, LOAD-STEP 15
COORDINATES, DISPLACEMENTS AND CRACK DEPTHS ARE INCHES
Y-BAR IS "NEUTRAL AXIS" LOCATION FROM INTERIOR, INCHES
PRESSURES ARE LB/IN**2
MOMENTS ARE IN-LB/IN
THRUST AND SHEAR ARE LB/IN

LOCAL NODE	X-COORD. Y-COORD.	X-DISP. Y-DISP.	N-PRES. S-PRES.	MOMENT THRUST	Y-BAR CRACK DEPTH
1	0.00 101.00	0.00000E+00 -0.20828E+01	-0.93356E+01 -0.16515E+00	0.24167E+05 -0.18041E+04	0.74705E+01 0.70225E+01
2	13.43 100.76	-0.81749E-03 -0.20612E+01	-0.95386E+01 -0.15424E+01	0.23668E+05 -0.18277E+04	0.73583E+01 0.69927E+01
3	26.84 100.08	0.12125E-02 -0.19975E+01	-0.97415E+01 -0.29197E+01	0.22104E+05 -0.18622E+04	0.74181E+01 0.69565E+01
4	40.22 98.95	0.86180E-02 -0.18946E+01	-0.10142E+02 -0.38747E+01	0.19452E+05 -0.19153E+04	0.74181E+01 0.68801E+01
5	53.56 97.38	0.23421E-01 -0.17577E+01	-0.10720E+02 -0.42096E+01	0.15667E+05 -0.19804E+04	0.74181E+01 0.67322E+01
6	66.84 95.38	0.46800E-01 -0.15949E+01	-0.11579E+02 -0.44841E+01	0.10672E+05 -0.20529E+04	0.74181E+01 0.63008E+01

7	80.05	0.78463E-01	-0.12497E+02	0.43474E+04	0.50615E+01
	92.93	-0.14198E+01	-0.45813E+01	-0.21315E+04	0.13885E+00
8	93.16	0.11642E+00	-0.13589E+02	-0.34386E+04	0.20283E+01
	90.05	-0.12429E+01	-0.46429E+01	-0.22153E+04	0.69520E+01
9	106.18	0.15727E+00	-0.14804E+02	-0.12846E+05	0.25648E+01
	86.73	-0.10762E+01	-0.44989E+01	-0.23029E+04	0.66284E+01
10	119.08	0.19621E+00	-0.15610E+02	-0.24054E+05	0.27446E+01
	82.99	-0.93693E+00	-0.39597E+01	-0.23908E+04	0.73600E+01
11	131.84	0.23010E+00	-0.16104E+02	-0.37180E+05	0.34229E+01
	78.82	-0.82875E+00	-0.36262E+01	-0.24784E+04	0.82912E+01
12	144.47	0.25816E+00	-0.16406E+02	-0.52296E+05	0.40506E+01
	74.23	-0.74817E+00	-0.34424E+01	-0.25688E+04	0.10457E+02
13	156.93	0.28103E+00	-0.17251E+02	-0.69460E+05	0.44678E+01
	69.23	-0.68850E+00	-0.32499E+01	-0.26639E+04	0.13519E+02
14	169.22	0.29997E+00	-0.21595E+02	-0.88841E+05	0.55838E+01
	63.82	-0.64318E+00	-0.16198E+02	-0.29053E+04	0.19519E+02
15	171.39	0.32637E+00	-0.97355E+01	-0.77933E+05	0.49926E+01
	54.75	-0.63613E+00	-0.42277E+01	-0.30821E+04	0.13865E+02
16	172.91	0.34562E+00	-0.98356E+01	-0.65874E+05	0.42445E+01
	45.55	-0.63213E+00	-0.41486E+01	-0.30446E+04	0.10640E+02
17	173.78	0.35284E+00	-0.10792E+02	-0.52688E+05	0.36636E+01
	36.26	-0.63050E+00	-0.44522E+01	-0.29971E+04	0.87194E+01
18	174.00	0.34450E+00	-0.11743E+02	-0.38475E+05	0.34579E+01
	26.94	-0.62966E+00	-0.44329E+01	-0.29853E+04	0.79510E+01
19	174.00	0.30623E+00	-0.45774E+01	-0.18822E+05	0.30043E+01
	13.47	-0.62808E+00	-0.20956E+01	-0.30203E+04	0.78352E+01
20	174.00	0.25348E+00	0.25884E+01	-0.34015E-09	0.60775E+01
	0.00	-0.62713E+00	0.24167E+00	-0.30626E+04	0.00000E+00

SHEAR FORCE DIAGNOSTCS FOR CONCRETE-GROUP 1, LOAD STEP 15
-- V-factor is coefficient of sqrt(PFPC) equal to capacity.
-- Shear depth "d" is negative if measured from outer wall.
-- Stirrup load is excess shear force above capacity.

NODE	EQUIVALENT V-factor	SHEAR CAPACITY lbs/inch	APPLIED SHEAR lbs/inch	APPLIED/ CAPACITY ratio	SHEAR DEPTH-d inches	STIRRUP LOAD lbs/inch
1	1.82	1172.05	-2.47	0.002	8.00	0.00
2	1.82	1173.32	76.84	0.065	8.00	0.00
3	1.82	1175.17	156.95	0.134	8.00	0.00
4	1.83	1178.03	239.63	0.203	8.00	0.00
5	1.83	1181.52	326.89	0.277	8.00	0.00
6	2.07	1333.20	421.42	0.316	8.00	0.00
7	4.50	2900.32	525.34	0.181	8.00	0.00
8	4.50	2741.89	640.10	0.233	-7.56	0.00
9	3.11	1894.70	767.49	0.405	-7.56	0.00
10	2.10	1384.13	905.97	0.655	-8.19	0.00
11	2.10	1671.98	1051.45	0.629	-9.88	0.00
12	1.81	1864.19	1201.75	0.645	-12.75	0.00

13	1.64	2211.19	1360.57	0.615	-16.75	0.00
14	1.41	2777.02	136.79	0.049	-24.50	0.00
15	1.59	2220.85	-1231.27	0.554	-17.31	0.00
16	1.83	1903.82	-1353.48	0.711	-12.94	0.00
17	2.07	1734.06	-1468.96	0.847	-10.38	0.00
18	2.54	1947.93	-1491.47	0.766	-9.50	0.00
19	3.58	2739.33	-1428.16	0.521	-9.50	0.00
20	4.50	3444.13	-1366.50	0.397	-9.50	0.00

ASSESSMENT SUMMARY CONCRETE-GROUP 1, LOAD-STEP 15

LRFD SUMMARY EVALUATION FOR GROUP 1, LOAD STEP 15

DESIGN-CRITERION	CONTROL NODE	FACTORED DEMAND	FACTORED CAPACITY	RATIO VALUE
STEEL YIELDING (psi)	17	39657.6	57000.0	0.696
CONCRETE CRUSHING (psi)	17	3566.8	4875.0	0.732
SHEAR FAILURE (lbs/in)	17	1469.0	1560.7	0.941 ✓
RADIAL-TENSION FAIL (psi)	1	7.4	69.6	0.106

LRFD SERVICE-LOAD PERFORMANCE MEASURES FOR GROUP 1, LOAD STEP 15

NODE NUMBER FOR MAXIMUM CRACK WIDTH 17

MAXIMUM CRACK WIDTH AT SERVICE LOAD (inches) 0.00670

LRFD RATIO: MAX-CRACK-WIDTH / ALLOWABLE 0.67

SPAN LENGTH FOR AUXILIARY EQUATIONS (inches)..... 348.00

* * * * NORMAL EXIT FROM CANDE * * * *

*** WELCOME TO CANDE-2013(version 3/1/2013) ***

MASTER CONTROL AND PIPE-TYPE DATA FOR PROBLEM # 1

USER TITLE: 28x8_u8.6_HS20c2

* * * BOUNDARY CONDITIONS * * *
(FORCES = LBS; DISPLACEMENTS = INCHES; ROTATIONS = DEGREES)

BOUNDARY NODE	LOAD STEP	X-FORCE OR X-DISPLACEMENT	Y-FORCE OR Y-DISPLACEMENT	X-Y ROTATION BEAM ROTATIONAL BOUNDARY CONDITIONS
291	12	F = 0.0000E+00	F = -0.3780E+02	0.0000E+00 F
291	13	F = 0.0000E+00	F = -0.3780E+02	0.0000E+00 F
291	14	F = 0.0000E+00	F = -0.3780E+02	0.0000E+00 F
291	15	F = 0.0000E+00	F = -0.3780E+02	0.0000E+00 F
293	12	F = 0.0000E+00	F = 0.0000E+00	0.0000E+00 F
293	13	F = 0.0000E+00	F = 0.0000E+00	0.0000E+00 F
293	14	F = 0.0000E+00	F = 0.0000E+00	0.0000E+00 F
293	15	F = 0.0000E+00	F = 0.0000E+00	0.0000E+00 F
287	15	F = 0.0000E+00	F = 0.0000E+00	0.0000E+00 F
288	15	F = 0.0000E+00	F = 0.0000E+00	0.0000E+00 F
289	15	F = 0.0000E+00	F = 0.0000E+00	0.0000E+00 F
290	15	F = 0.0000E+00	F = 0.0000E+00	0.0000E+00 F
291	15	F = 0.0000E+00	F = 0.0000E+00	0.0000E+00 F
292	15	F = 0.0000E+00	F = 0.0000E+00	0.0000E+00 F
293	15	F = 0.0000E+00	F = 0.0000E+00	0.0000E+00 F
294	15	F = 0.0000E+00	F = 0.0000E+00	0.0000E+00 F
295	15	F = 0.0000E+00	F = 0.0000E+00	0.0000E+00 F
296	15	F = 0.0000E+00	F = 0.0000E+00	0.0000E+00 F

LRFD TOTAL LOAD FACTORS PER LOAD STEP

LOAD STEP	LOAD FACTOR	USER COMMENT
1	1.313	Factor for load step #1
2	0.875	Factor for load step #2
3	0.857	Factor for load step #3
4	0.857	Factor for load step #4

5	0.857	Factor for load step #5
6	1.365	Factor for load step #6
7	1.365	Factor for load step #7
8	1.365	Factor for load step #8
9	1.365	Factor for load step #9
10	1.365	Factor for load step #10
11	1.365	Factor for load step #11
12	1.750	Factor for load step #12
13	1.750	Factor for load step #13
14	1.750	Factor for load step #14
15	1.750	Factor for load step #15

+ +

FINITE ELEMENT OUTPUT FOR LOAD STEP 15

+ +

CONCRETE, FACTORED-EVALUATION FOR GROUP 1, LOAD-STEP 15

STRUCTURAL RESPONSES OF CONCRETE-GROUP 1, LOAD-STEP 15
COORDINATES, DISPLACEMENTS AND CRACK DEPTHS ARE INCHES
Y-BAR IS "NEUTRAL AXIS" LOCATION FROM INTERIOR, INCHES
PRESSURES ARE LB/IN**2
MOMENTS ARE IN-LB/IN
THRUST AND SHEAR ARE LB/IN

LOCAL NODE	X-COORD. Y-COORD.	X-DISP. Y-DISP.	N-PRES. S-PRES.	MOMENT THRUST	Y-BAR CRACK DEPTH
1	0.00	0.00000E+00	-0.84418E+01	0.24206E+05	0.73190E+01
	101.00	-0.21435E+01	-0.53167E-01	-0.18936E+04	0.69865E+01
2	13.43	-0.87214E-03	-0.90608E+01	0.23784E+05	0.73309E+01
	100.76	-0.21219E+01	-0.12249E+01	-0.19127E+04	0.69762E+01
3	26.84	0.11195E-02	-0.96799E+01	0.22422E+05	0.74181E+01
	100.08	-0.20578E+01	-0.23967E+01	-0.19410E+04	0.69457E+01
4	40.22	0.85520E-02	-0.10534E+02	0.20018E+05	0.74181E+01
	98.95	-0.19541E+01	-0.33151E+01	-0.19864E+04	0.68778E+01
5	53.56	0.23534E-01	-0.11494E+02	0.16441E+05	0.74181E+01
	97.38	-0.18153E+01	-0.37549E+01	-0.20441E+04	0.67454E+01
6	66.84	0.47364E-01	-0.12615E+02	0.11544E+05	0.74181E+01
	95.38	-0.16492E+01	-0.42414E+01	-0.21117E+04	0.63636E+01
7	80.05	0.79796E-01	-0.13642E+02	0.51553E+04	0.50615E+01
	92.93	-0.14698E+01	-0.45622E+01	-0.21888E+04	0.85553E+00
8	93.16	0.11880E+00	-0.14714E+02	-0.28753E+04	0.20283E+01

	90.05	-0.12881E+01	-0.48286E+01	-0.22743E+04	0.67380E+01
9	106.18	0.16104E+00	-0.15802E+02	-0.12704E+05	0.25648E+01
	86.73	-0.11158E+01	-0.48943E+01	-0.23668E+04	0.65964E+01
10	119.08	0.20166E+00	-0.16492E+02	-0.24485E+05	0.27446E+01
	82.99	-0.97056E+00	-0.44915E+01	-0.24623E+04	0.73546E+01
11	131.84	0.23725E+00	-0.16855E+02	-0.38312E+05	0.34229E+01
	78.82	-0.85705E+00	-0.41948E+01	-0.25591E+04	0.82918E+01
12	144.47	0.26690E+00	-0.17002E+02	-0.54227E+05	0.40506E+01
	74.23	-0.77197E+00	-0.39674E+01	-0.26588E+04	0.10461E+02
13	156.93	0.29120E+00	-0.17705E+02	-0.72259E+05	0.44678E+01
	69.23	-0.70859E+00	-0.37499E+01	-0.27629E+04	0.13528E+02
14	169.22	0.31147E+00	-0.21950E+02	-0.92545E+05	0.55838E+01
	63.82	-0.66015E+00	-0.16986E+02	-0.30200E+04	0.19533E+02
15	171.39	0.33987E+00	-0.97623E+01	-0.81238E+05	0.45538E+01
	54.75	-0.65259E+00	-0.42632E+01	-0.32066E+04	0.13912E+02
16	172.91	0.36082E+00	-0.99578E+01	-0.68701E+05	0.42445E+01
	45.55	-0.64827E+00	-0.42253E+01	-0.31660E+04	0.10639E+02
17	173.78	0.36921E+00	-0.11043E+02	-0.54966E+05	0.36636E+01
	36.26	-0.64649E+00	-0.45487E+01	-0.31152E+04	0.87192E+01
18	174.00	0.36136E+00	-0.12151E+02	-0.40149E+05	0.34579E+01
	26.94	-0.64560E+00	-0.44749E+01	-0.31012E+04	0.79518E+01
19	174.00	0.32259E+00	-0.46710E+01	-0.19651E+05	0.30043E+01
	13.47	-0.64395E+00	-0.21944E+01	-0.31363E+04	0.78447E+01
20	174.00	0.26869E+00	0.28086E+01	-0.29922E-09	0.60775E+01
	0.00	-0.64297E+00	0.86004E-01	-0.31799E+04	0.00000E+00

SHEAR FORCE DIAGNOSTCS FOR CONCRETE-GROUP 1, LOAD STEP 15
-- V-factor is coefficient of sqrt(PFPC) equal to capacity.
-- Shear depth "d" is negative if measured from outer wall.
-- Stirrup load is excess shear force above capacity.

NODE	EQUIVALENT V-factor	SHEAR CAPACITY lbs/inch	APPLIED SHEAR lbs/inch	APPLIED/ CAPACITY ratio	SHEAR DEPTH-d inches	STIRRUP LOAD lbs/inch
1	1.82	1176.86	-3.65	0.003	8.00	0.00
2	1.83	1177.89	66.44	0.056	8.00	0.00
3	1.83	1179.41	140.21	0.119	8.00	0.00
4	1.83	1181.85	222.64	0.188	8.00	0.00
5	1.84	1184.95	315.51	0.266	8.00	0.00
6	1.94	1249.17	420.17	0.336	8.00	0.00
7	4.37	2821.74	536.81	0.190	8.00	0.00
8	4.50	2741.89	664.90	0.242	-7.56	0.00
9	3.25	1984.44	804.52	0.405	-7.56	0.00
10	2.16	1424.45	953.38	0.669	-8.19	0.00
11	2.11	1676.93	1107.31	0.660	-9.88	0.00
12	1.82	1869.26	1263.84	0.676	-12.75	0.00
13	1.65	2229.26	1426.59	0.640	-16.75	0.00
14	1.41	2782.62	149.10	0.054	-24.50	0.00
15	1.60	2227.33	-1278.35	0.574	-17.31	0.00
16	1.83	1910.64	-1408.54	0.737	-12.94	0.00

17	2.08	1741.18	-1530.71	0.879	-10.38	0.00
18	2.55	1954.60	-1555.24	0.796	-9.50	0.00
19	3.59	2748.43	-1490.32	0.542	-9.50	0.00
20	4.50	3444.13	-1427.40	0.414	-9.50	0.00

ASSESSMENT SUMMARY CONCRETE-GROUP 1, LOAD-STEP 15

LRFD SUMMARY EVALUATION FOR GROUP 1, LOAD STEP 15

DESIGN-CRITERION	CONTROL NODE	FACTORED DEMAND	FACTORED CAPACITY	RATIO VALUE
STEEL YIELDING (psi)	17	41428.2	57000.0	0.727
CONCRETE CRUSHING (psi)	17	3658.9	4875.0	0.751
SHEAR FAILURE (lbs/in)	17	1530.7	1567.1	0.977
RADIAL-TENSION FAIL (psi)	1	7.3	69.6	0.105

LRFD SERVICE-LOAD PERFORMANCE MEASURES FOR GROUP 1, LOAD STEP 15

NODE NUMBER FOR MAXIMUM CRACK WIDTH 17

MAXIMUM CRACK WIDTH AT SERVICE LOAD (inches) 0.00727

LRFD RATIO: MAX-CRACK-WIDTH / ALLOWABLE 0.73

SPAN LENGTH FOR AUXILIARY EQUATIONS (inches)..... 348.00

* * * * NORMAL EXIT FROM CANDE * * * *

DELTA
ENGINEERS, ARCHITECTS, & LAND SURVEYORS
860 Hooper Road, Endwell, NY 13760
www.deltaengineers.com
Phone: (607) 231-6600
Fax: (607) 231-6650

JOB	2016.059.009		
DESCRIPTION	28x8 under 8: HS20 Case 2		
SHEET NO.	OF	SCALE	
CALCULATED BY		DATE	
CHECKED BY		DATE	

LRFR LOAD RATING - HS20 Case 2

Technical Data & Load Factors

Culvert Span (S) =	29.00 ft.	(C to C)	
Crown Radius (Rad) =	33.83 ft.		
Bar Cover			
Outside Face (Cov_{out}) =	2.00 in		
Inside Face (Cov_{in}) =	1.50 in		
Design Section Length (b) =	12 in		
Compressive Strength (f_c) =	6.5 ksi		
Yield Strength (f_y) =	60 ksi		
Stirrup Yield Strength (f_{ystir}) =	60 ksi		
Circumferential Reinforcement Spa. (spa.) =	5.00 in		
Circumferential Reinforcement Provided (n) =	1	(n=1 for 1 layer, n=2 for multiple layers)	AASHTO
Reinforcement Type (Type) =	3	AASHTO Table	12.10.4.2.4d
1 - smooth wire or plain bar		12.10.4.4d-1	
2 - WWF (8" max spa. Smooth)			
3 - WWF (deformed) or bar (deformed)			

Resistance Factors:

ϕf - Flexure =	1.00	AASHTO Table 12.5.5-1
ϕr - Radial Tension =	0.90	AASHTO Table 12.5.5-1
ϕv - Diag Tension =	0.90	AASHTO Table 12.5.5-1
Radial Tension Process (F_{rp}) =	1.00	AASHTO 12.10.4.2.3
Diag Tension Process (F_{vp}) =	1.00	AASHTO 12.10.4.2.3

Load Factors:

	IR	OR	
LL Factor	1.75	1.35	load modification factors already applied to magnitude
γ_pDC (component)	1.31	(1.25*1.05)	
γ_pEH (hor. At rest earth pressure)	0.86	(0.9/1.05)	
γ_pEV	1.37	(1.3*1.05)	
State Trucks		1.45	(ADTT = 280)

Des. By: RJA Chk. By: GSC

DELTA
ENGINEERS, ARCHITECTS, & LAND SURVEYORS
860 Hooper Road, Endwell, NY 13760
www.deltaengineers.com
Phone: (607) 231-6600
Fax: (607) 231-6650

JOB	2016.059.009
DESCRIPTION	28x8 under 8: HS20 Case 2
SHEET NO.	OF
CALCULATED BY	DATE
CHECKED BY	DATE

Design Force Summary

	Factored DC+EV+EH			Max Factored Total Load			Max Factored LL			
Node Number	Factored Thrust Nu (k/ft)	Factored Moment Mu (k-in/ft)	Factored Shear Vu (k/ft)	Factored Thrust Nu (k/ft)	Factored Moment Mu (k-in/ft)	Factored Shear Vu (k/ft)	Factored Thrust Nu (k/ft)	Factored Moment Mu (k-in/ft)	Factored Shear Vu (k/ft)	Thk at node (in)
1	-22.14	275.22	-0.03	-22.72	290.47	-0.04	-0.59	15.25	-0.01	10.000
2	-22.37	270.08	0.80	-22.95	285.41	0.80	-0.58	15.32	0.00	10.000
3	-22.70	253.74	1.66	-23.29	269.06	1.68	-0.59	15.32	0.03	10.000
4	-23.24	225.56	2.58	-23.84	240.22	2.67	-0.60	14.65	0.09	10.000
5	-23.93	184.46	3.59	-24.53	197.29	3.79	-0.60	12.83	0.19	10.000
6	-24.72	129.08	4.72	-25.34	138.53	5.04	-0.62	9.44	0.32	10.000
7	-25.60	57.57	6.00	-26.27	61.86	6.44	-0.67	4.29	0.44	10.000
8	-26.56	-32.02	7.43	-27.29	-34.50	7.98	-0.73	-2.48	0.55	10.063
9	-27.58	-141.89	9.02	-28.40	-152.45	9.65	-0.82	-10.56	0.63	10.063
10	-28.61	-274.38	10.77	-29.55	-293.82	11.44	-0.94	-19.44	0.67	10.688
11	-29.66	-431.26	12.63	-30.71	-459.74	13.29	-1.05	-28.49	0.66	12.375
12	-30.77	-613.57	14.55	-31.91	-650.72	15.17	-1.14	-37.15	0.61	15.250
13	-31.95	-822.16	16.58	-33.15	-867.11	17.12	-1.21	-44.95	0.54	19.250
14	-35.06	-1058.99	1.91	-36.24	-1110.54	1.79	-1.18	-51.55	-0.12	27.000
15	-37.39	-930.06	-14.57	-38.48	-974.86	-15.34	-1.08	-44.80	-0.77	19.813
16	-36.98	-787.22	-16.06	-37.99	-824.41	-16.90	-1.01	-37.19	-0.85	15.438
17	-36.44	-630.60	-17.49	-37.38	-659.59	-18.37	-0.94	-28.99	-0.88	12.875
18	-36.33	-461.04	-17.83	-37.21	-481.79	-18.66	-0.89	-20.75	-0.83	12.000
19	-36.77	-225.56	-17.11	-37.64	-235.81	-17.88	-0.86	-10.25	-0.77	12.000
20	-37.29	0.00	-16.38	-38.16	0.00	-17.13	-0.87	0.00	-0.75	12.000

Note: "-" thrust indicate compression

Des. By: RJA Chk. By: GSC

DELTA
ENGINEERS, ARCHITECTS, & LAND SURVEYORS
860 Hooper Road, Endwell, NY 13760
www.deltaengineers.com
Phone: (607) 231-6600
Fax: (607) 231-6650

LRFR LOAD RATING - HS20 Case 2

Node	Total Fac.	Factored DC+EH+EV			Factored LL			
Number	Nu (k/ft)	Nu_D (k/ft)	Mu_D (in-k/ft)	Vu_D (k/ft)	Nu_{LL} (k/ft)	$+Mu_{LL}$ (in-k/ft)	Vu_{LL} (k/ft)	Thick (in)
1	-22.72	-22.14	275.22	0.03	-0.59	15.25	0.01	10
2	-22.95	-22.37	270.08	0.80	-0.58	15.32	0.00	10
3	-23.29	-22.70	253.74	1.66	-0.59	15.32	0.03	10
4	-23.84	-23.24	225.56	2.58	-0.60	14.65	0.09	10
5	-24.53	-23.93	184.46	3.59	-0.60	12.83	0.19	10
6	-25.34	-24.72	129.08	4.72	-0.62	9.44	0.32	10
7	-26.27	-25.60	57.57	6.00	-0.67	4.29	0.44	10
8	-27.29	-26.56	-32.02	7.43	-0.73	-2.48	0.55	10.063
9	-28.40	-27.58	-141.89	9.02	-0.82	-10.56	0.63	10.063
10	-29.55	-28.61	-274.38	10.77	-0.94	-19.44	0.67	10.688
11	-30.71	-29.66	-431.26	12.63	-1.05	-28.49	0.66	12.375
12	-31.91	-30.77	-613.57	14.55	-1.14	-37.15	0.61	15.25
13	-33.15	-31.95	-822.16	16.58	-1.21	-44.95	0.54	19.25
14	-36.24	-35.06	-1058.99	1.91	-1.18	-51.55	0.12	27
15	-38.48	-37.39	-930.06	14.57	-1.08	-44.80	0.77	19.813
16	-37.99	-36.98	-787.22	16.06	-1.01	-37.19	0.85	15.438
17	-37.38	-36.44	-630.60	17.49	-0.94	-28.99	0.88	12.875
18	-37.21	-36.33	-461.04	17.83	-0.89	-20.75	0.83	12
19	-37.64	-36.77	-225.56	17.11	-0.86	-10.25	0.77	12
20	-38.16	-37.29	0.00	16.38	-0.87	0.00	0.75	12

note all shear values normalized to positive

Des. By: RJA Chk. By: GSC

DELTA
ENGINEERS, ARCHITECTS, & LAND SURVEYORS
860 Hooper Road, Endwell, NY 13760
www.deltaengineers.com
Phone: (607) 231-6600
Fax: (607) 231-6650

JOB 2016.059.009
DESCRIPTION 28x8 under 8: HS20 Case 2
SHEET NO. OF SCALE
CALCULATED BY DATE
CHECKED BY DATE

Node Number	thk (in)	d (in)	As'in (prov'd) (in^2 / ft)	As'out (prov'd) (in^2 / ft)
1	10.0	8.00	0.92	0.24
2	10.0	8.00	0.92	0.24
3	10.0	8.00	0.92	0.24
4	10.0	8.00	0.92	0.24
5	10.0	8.00	0.92	0.24
6	10.0	8.00	0.92	0.24
7	10.0	8.00	0.92	0.24
8	10.1	7.56	0.92	0.24
9	10.1	7.56	0.92	1.06
10	10.7	8.19	0.24	1.06
11	12.4	9.88	0.48	1.56
12	15.3	12.75	0.48	1.56
13	19.3	16.75	0.48	1.56
14	27.0	24.50	0.48	1.56
15	19.8	17.31	0.48	1.56
16	15.4	12.94	0.48	1.56
17	12.9	10.38	0.48	1.56
18	12.0	9.50	0.48	1.56
19	12.0	9.50	0.48	1.06
20	12.0	9.50	0.48	1.06

Des. By: RJA Chk. By: GSC

DELTA
ENGINEERS, ARCHITECTS, & LAND SURVEYORS
860 Hooper Road, Endwell, NY 13760
www.deltaengineers.com
Phone: (607) 231-6600
Fax: (607) 231-6650

LRFR LOAD RATING - HS20 Case 2

Node Number	thk (in)	d (in)	As (prov'd) (in^2 / ft)	Total Fac. Nu (k/ft)	Phi Mn (in-k/ft)
1	10.0	8.00	0.92	-22.72	507.22
2	10.0	8.00	0.92	-22.95	508.07
3	10.0	8.00	0.92	-23.29	509.34
4	10.0	8.00	0.92	-23.84	511.36
5	10.0	8.00	0.92	-24.53	513.92
6	10.0	8.00	0.92	-25.34	516.91
7	10.0	8.00	0.92	-26.27	520.31
8	10.1	7.56	0.24	-27.29	232.02
9	10.1	7.56	1.06	-28.40	553.30
10	10.7	8.19	1.06	-29.55	606.17
11	12.4	9.88	1.56	-30.71	988.06
12	15.3	12.75	1.56	-31.91	1307.99
13	19.3	16.75	1.56	-33.15	1755.65
14	27.0	24.50	1.56	-36.24	2644.71
15	19.8	17.31	1.56	-38.48	1859.17
16	15.4	12.94	1.56	-37.99	1362.78
17	12.9	10.38	1.56	-37.38	1071.58
18	12.0	9.50	1.56	-37.21	972.68
19	12.0	9.50	1.06	-37.64	744.40
20	12.0	9.50	1.06	-38.16	746.67

AASHTO 12.10.4.2.4a

g = 0.85 b f'c = 61

$$\phi M_n = \frac{1}{2}\left[g(\phi_f d)^2 - Nu(2\phi_f d - h) - \frac{(g\phi_f d - N_u - A_s F_y)^2}{g} \right]$$

Des. By: RJA Chk. By: GSC

DELTA
ENGINEERS, ARCHITECTS, & LAND SURVEYORS
860 Hooper Road, Endwell, NY 13760
www.deltaengineers.com
Phone: (607) 231-6600
Fax: (607) 231-6650

JOB	2016.059.009
DESCRIPTION	28x8 under 8: HS20 Case 2
SHEET NO.	OF SCALE
CALCULATED BY	DATE
CHECKED BY	DATE

LRFR LOAD RATING - HS20 Case 2

Node Number	thk (in)	d (in)	Phi Mn (in-k/ft)	Mu_D (in-k/ft)	$+Mu_{LL}$ (in-k/ft)	Inventory Rating	Operating Rating
1	10.0	8.00	507.22	275.22	15.25	15.21	19.72
2	10.0	8.00	508.07	270.08	15.32	15.53	20.13
3	10.0	8.00	509.34	253.74	15.32	16.68	21.62
4	10.0	8.00	511.36	225.56	14.65	19.51	25.28
5	10.0	8.00	513.92	184.46	12.83	25.68	33.29
6	10.0	8.00	516.91	129.08	9.44	41.07	53.23
7	10.0	8.00	520.31	57.57	4.29	107.83	139.78
8	10.1	7.56	232.02	-32.02	-2.48	80.63	104.52
9	10.1	7.56	553.30	-141.89	-10.56	38.96	50.50
10	10.7	8.19	606.17	-274.38	-19.44	17.07	22.12
11	12.4	9.88	988.06	-431.26	-28.49	19.55	25.34
12	15.3	12.75	1307.99	-613.57	-37.15	18.69	24.23
13	19.3	16.75	1755.65	-822.16	-44.95	20.77	26.92
14	27.0	24.50	2644.71	-1058.99	-51.55	30.76	39.87
15	19.8	17.31	1859.17	-930.06	-44.80	20.74	26.89
16	15.4	12.94	1362.78	-787.22	-37.19	15.48	20.06
17	12.9	10.38	1071.58	-630.60	-28.99	15.21	19.72
18	12.0	9.50	972.68	-461.04	-20.75	24.66	31.97
19	12.0	9.50	744.40	-225.56	-10.25	50.63	65.63
20	12.0	9.50	746.67	0.00	0.00	N/A	N/A
					Controlling	**15.21**	**19.72**

g = 0.85 b f'c = 61

$$\phi M_n = \frac{1}{2}\left[g(\phi_f d)^2 - Nu(2\phi_f d - h) - \frac{(g\phi_f d - N_u - A_s F_y)^2}{g} \right]$$

Des. By: RJA Chk. By: GSC

DELTA ENGINEERS
184 Court Street
BINGHAMTON, NEW YORK 13901
(607) 231-6600 Fax 231-6650

JOB	2016.059.009
DESCRIPTION	28x8 under 8: HS20 Case 2
SHEET NO.	OF
SCALE	
CALCULATED BY	
DATE	
CHECKED BY	
DATE	

LRFR LOAD RATING - HS20 Case 2

Elmt Nmbr	thk (in)	d (in)	As (prov'd) (in^2 / ft)	Vtotal (kip/ft)	Vdl only (kip/ft)	Vll only (kip/ft)	Vn=Vc+Vs ϕVn (kip/ft)	1.75 INV	1.35 OPR
1	10.0	8.000	0.92	0.04	0.03	0.01	12.71	1258	1630
2	10.0	8.000	0.92	0.80	0.80	0.00	12.72	4967	6439
3	10.0	8.000	0.92	1.68	1.66	0.03	12.74	439.7	570
4	10.0	8.000	0.92	2.67	2.58	0.09	12.76	110.1	142.7
5	10.0	8.000	0.92	3.79	3.59	0.19	12.80	47.41	61.46
6	10.0	8.000	0.92	5.04	4.72	0.32	13.49	27.58	35.75
7	10.0	8.000	0.92	6.44	6.00	0.44	30.47	55.16	71.5
8	10.1	7.563	0.24	7.98	7.43	0.55	29.61	40.13	52.02
9	10.1	7.563	1.06	9.65	9.02	0.63	21.43	19.66	25.48
10	10.7	8.188	1.06	11.44	10.77	0.67	15.38	6.909	8.957
11	12.4	9.875	1.56	13.29	12.63	0.66	18.11	8.31	10.77
12	15.3	12.750	1.56	15.17	14.55	0.61	20.19	9.188	11.91
13	19.3	16.750	1.56	17.12	16.58	0.54	24.08	13.98	18.12
14	27.0	24.500	1.56	1.79	1.91	0.12	30.05	242.3	314.1
15	19.8	17.313	1.56	15.34	14.57	0.77	24.06	12.31	15.96
16	15.4	12.938	1.56	16.90	16.06	0.85	20.63	5.404 ✓	7.006
17	12.9	10.375	1.56	18.37	17.49	0.88	47.55	34.14	44.25
18	12.0	9.500	1.56	18.66	17.83	0.83	47.70	35.89	46.53
19	12.0	9.500	1.06	17.88	17.11	0.77	56.82	51.54	66.82
20	12.0	9.500	1.06	17.13	16.38	0.75	64.20	63.74	82.63
							controling:	**5.404**	**7.006**

$$F_d = 0.8 + \frac{1.6}{d} \le 1.3$$

$$F_n = 1 + \frac{N_u}{24 * thk}$$

$$\rho = \frac{A_s}{\phi bd} \le 0.02$$

$$\phi V_n = \phi 0.0316 b d F_{vp} \sqrt{f'c}\left(1.1 + 63\rho\right)\left(\frac{F_d F_n}{F_c}\right)$$

$$F_c = 1 \pm \left(\frac{d}{2 * rad}\right)$$

Shear Resistance With Stirrups **AASHTO 12.10.4.2.5**

Des. By: RJA Chk. By: GSC

DELTA ENGINEERS
184 Court Street
BINGHAMTON, NEW YORK 13901
(607) 231-6600 Fax 231-6650

JOB	2016.059.009		
DESCRIPTION	28x8 under 8: HS20 Case 2		
SHEET NO.	OF	SCALE	0
CALCULATED BY		DATE	
CHECKED BY		DATE	

Arch Design

Positive Moment Design (cont.)

Shear Resistance With Radial Stirrups AASHTO 12.10.4.2.6

Element Number	thk (in)	d (in)	Sv MAX (in)	Sv Act (in)	Avr (in^2 / ft)	Sv MAX (in)	Sv Act (in)	Avs (in^2 / ft)	ϕVs (k/ft)
1	10.0	8.13	5.48	0.00	0.00	5.48	0.00	0.00	0
2	10.0	8.13	5.48	0.00	0.00	5.48	0.00	0.00	0
3	10.0	8.13	5.48	0.00	0.00	5.48	0.00	0.00	0
4	10.0	8.13	5.48	0.00	0.00	5.48	0.00	0.00	0
5	10.0	8.13	5.48	0.00	0.00	5.48	0.00	0.00	0
6	10.0	8.13	5.48	0.00	0.00	5.48	0.00	0.00	0
7	10.0	8.13	5.48	0.00	0.00	5.48	0.00	0.00	0
8	10.1	7.69	5.19	0.00	0.00	5.19	0.00	0.00	0
9	10.1	7.69	5.19	0.00	0.00	5.19	0.00	0.00	0
10	10.7	8.31	5.61	0.00	0.00	5.61	0.00	0.00	0
11	12.4	10.00	6.75	0.00	0.00	6.75	0.00	0.00	0
12	15.3	12.88	8.69	0.00	0.00	8.69	0.00	0.00	0
13	19.3	16.88	11.39	0.00	0.00	11.39	0.00	0.00	0
14	27.0	24.63	16.62	0.00	0.00	16.62	0.00	0.00	0
15	19.8	17.44	11.77	0.00	0.00	11.77	0.00	0.00	0
16	15.4	13.06	8.82	0.00	0.00	8.82	0.00	0.00	0
17	12.9	10.50	7.09	4.50	0.01	7.09	4.50	0.02	28.75
18	12.0	9.63	6.50	4.50	0.01	6.50	4.50	0.03	26.59
19	12.0	9.63	6.50	4.50	0.00	6.50	4.50	0.02	27.13
20	12.0	9.63	6.50	4.50	0.00	6.50	4.50	0.01	27

For Radial Tension

$$A_{vr} = \frac{1.1 s_v (M_u - 0.45 N_u \phi_r d)}{f_y r_s \phi_r d}$$

$$s_v \le 0.75 \phi_r d$$

For Shear

$$A_{vs} = \frac{1.1 s_v}{f_y \phi_v d}(V_u F_c - V_c) + A_{vr}$$

$$V_c = \frac{4V_r}{\frac{M_{nu}}{V_u d} + 1} \le 0.0633 \phi_v b d \sqrt{f'_c}$$

Mnu=Mu-Nu(4h-d)/8

rearanging Avs equation above and

taking Fc =1.0, Vs = (Avs-Avr)*Fys*ϕv*d/(1.1*Sv) (<8*√F'c*Bw*d)

(#3@4.5")

As provided = 0.293 sq.in. / L.F.

Des. By: RJA Chk. By: GSC

DELTA
ENGINEERS, ARCHITECTS, & LAND SURVEYORS
860 Hooper Road, Endwell, NY 13760
www.deltaengineers.com
Phone: (607) 231-6600
Fax: (607) 231-6650

JOB	2016.059.009
DESCIPTION	28x8u8.6
SHEET NO.	____ OF ____ SCALE ____
CALCULATED BY	____ DATE ____
CHECKED BY	____ DATE ____

span	28 ft.	MPF	1.
earth cover over structure	8.6 ft.	impact = 33*(1-0.125*earth cover) =	0 %
axle width	6 ft	# of steps to divide load over in Cande =	4
wheel width	20 in.	live load distribution factor thru fill =	1.15

axle distribution width = axle width + wheel width + earth cover * dist factor thru fill = 17.56 feet

axle load to input into Cande = axle weight*impact*MPF/distribution width/12" per ft/# of load steps

LOAD RATING VEHICLES

TYPE 3S2 VEHICLE
36 TONS
(no lane load or MPF)

16 k 16 k 16 k 16 k 8 k
4' 22' 4' 11'

axle load to put into Cande
16 k = 18.99 lb/inch/step
8 k = 9.493 lb/inch/step

TYPE 6A VEHICLE
66 TONS
(no lane load or MPF)

24 24 24 k 24 k 24 k 12 k
4' 4' 31' 4.67' 11'

axle load to put into Cande
24 k = 28.48 lb/inch/step
12 k = 14.24 lb/inch/step

TYPE 3A VEHICLE
30 TONS
(no lane load or MPF)

24 k 24 k 12 k
4' 15'

axle load to put into Cande
24 k = 28.48 lb/inch/step
12 k = 14.24 lb/inch/step

TYPE 4A VEHICLE
34.5 TONS
(no lane load or MPF)

19 19 19 k 12 k
4' 4' 15'

axle load to put into Cande
19 k = 22.55 lb/inch/step
12 k = 14.24 lb/inch/step

TYPE 5A VEHICLE
38 TONS
(no lane load or MPF)

17 17 k 17 17 k 8 k
4' 16' 4' 11'

axle load to put into Cande
17 k = 20.17 lb/inch/step
8 k = 9.493 lb/inch/step

Des. By: RJA Chk. By: GSC

DELTA
ENGINEERS, ARCHITECTS, & LAND SURVEYORS
860 Hooper Road, Endwell, NY 13760
www.deltaengineers.com
Phone: (607) 231-6600
Fax: (607) 231-6650

JOB	2016.059.009		
DESCIPTION	28x8u8.6		
SHEET NO.	OF	SCALE	
CALCULATED BY		DATE	
CHECKED BY		DATE	

span 28 ft

leg thickness 12 inches

traffic parallel with main reinforcement

3S2 TRUCK

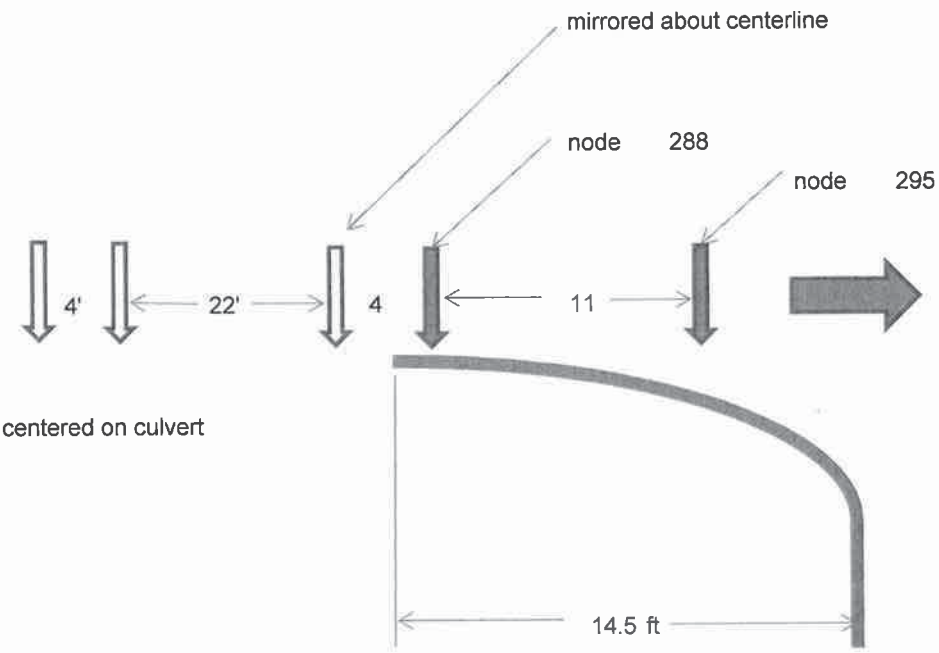

case 1

center axle group centered on culvert

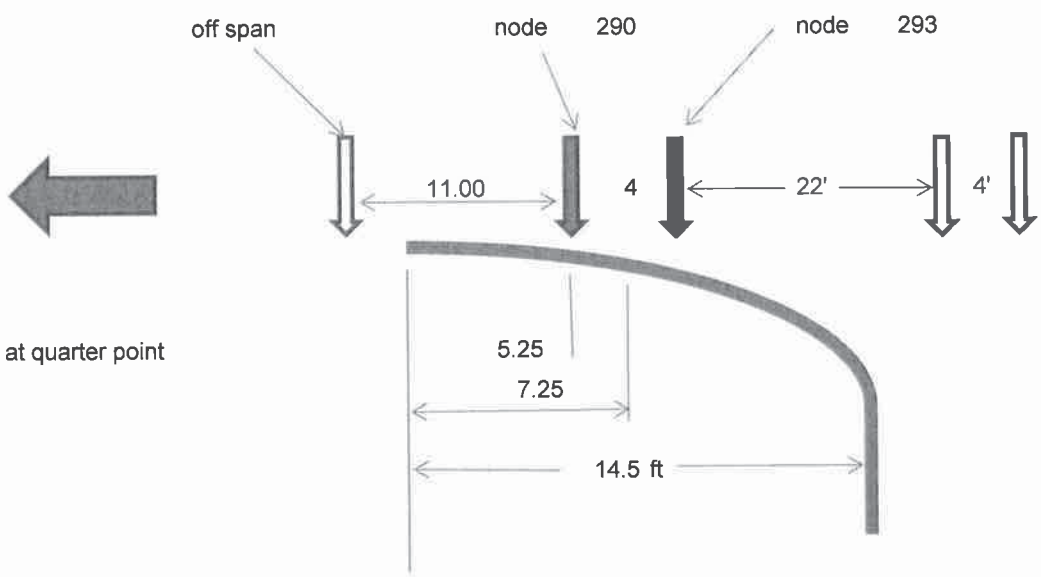

case 2

center axle group at quarter point

Des. By: RJA Chk. By: GSC

DELTA
ENGINEERS, ARCHITECTS, & LAND SURVEYORS
860 Hooper Road, Endwell, NY 13760
www.deltaengineers.com
Phone: (607) 231-6600
Fax: (607) 231-6650

JOB	2016.059.009
DESCIPTION	28x8u8.6
SHEET NO.	OF
SCALE	
CALCULATED BY	
DATE	
CHECKED BY	
DATE	

3S2 truck 8.6 ft earth cover (controls)

Load Case	Description	
1	3S2	truck at center
2	3S2	truck at quarter point

Boundary conditions

Case 1			Case 2		
node	step	force	node	step	force
288	12	-19.00	290	12	-19.00
288	13	-19.00	290	13	-19.00
288	14	-19.00	290	14	-19.00
288	15	-19.00	290	15	-19.00
295	12	-19.00	293	12	-19.00
295	13	-19.00	293	13	-19.00
295	14	-19.00	293	14	-19.00
295	12	-19.00	293	12	-19.00
296	13	0.00	296	13	0.00
296	14	0.00	296	14	0.00
296	15	0.00	296	15	0.00
296	15	0.00	296	15	0.00

capacity demand ratio

	Case 1		Case 2		
failure mode	node	ratio	node	ratio	
steel yeilding	17	0.745	17	0.751	
concrete crushing	17	0.763	17	0.766	Controls
shear failure	17	0.995	17	1.001	
radial tension failure	1	0.110	1	0.108	

Des. By: RJA Chk. By: GSC

*** WELCOME TO CANDE-2013(version 3/1/2013) ***

USER TITLE: 28x8_u8.6_3S2_c1

* * * BOUNDARY CONDITIONS * * *
(FORCES = LBS; DISPLACEMENTS = INCHES; ROTATIONS = DEGREES)

BOUNDARY NODE	LOAD STEP	X-FORCE OR X-DISPLACEMENT	Y-FORCE OR Y-DISPLACEMENT	X-Y ROTATION BEAM ROTATIONAL BOUNDARY CONDITIONS
288	12	F = 0.0000E+00	F = -0.1900E+02	0.0000E+00 F
288	13	F = 0.0000E+00	F = -0.1900E+02	0.0000E+00 F
288	14	F = 0.0000E+00	F = -0.1900E+02	0.0000E+00 F
288	15	F = 0.0000E+00	F = -0.1900E+02	0.0000E+00 F
295	12	F = 0.0000E+00	F = -0.1900E+02	0.0000E+00 F
295	13	F = 0.0000E+00	F = -0.1900E+02	0.0000E+00 F
295	14	F = 0.0000E+00	F = -0.1900E+02	0.0000E+00 F
295	12	F = 0.0000E+00	F = -0.1900E+02	0.0000E+00 F
296	13	F = 0.0000E+00	F = 0.0000E+00	0.0000E+00 F
296	14	F = 0.0000E+00	F = 0.0000E+00	0.0000E+00 F
296	15	F = 0.0000E+00	F = 0.0000E+00	0.0000E+00 F
296	15	F = 0.0000E+00	F = 0.0000E+00	0.0000E+00 F
287	15	F = 0.0000E+00	F = 0.0000E+00	0.0000E+00 F
288	15	F = 0.0000E+00	F = 0.0000E+00	0.0000E+00 F
289	15	F = 0.0000E+00	F = 0.0000E+00	0.0000E+00 F
290	15	F = 0.0000E+00	F = 0.0000E+00	0.0000E+00 F
291	15	F = 0.0000E+00	F = 0.0000E+00	0.0000E+00 F
292	15	F = 0.0000E+00	F = 0.0000E+00	0.0000E+00 F
293	15	F = 0.0000E+00	F = 0.0000E+00	0.0000E+00 F
294	15	F = 0.0000E+00	F = 0.0000E+00	0.0000E+00 F
295	15	F = 0.0000E+00	F = 0.0000E+00	0.0000E+00 F
296	15	F = 0.0000E+00	F = 0.0000E+00	0.0000E+00 F

LRFD TOTAL LOAD FACTORS PER LOAD STEP

LOAD STEP	LOAD FACTOR	USER COMMENT
1	1.313	Factor for load step #1

2	0.857	Factor for load step #2
3	0.857	Factor for load step #3
4	0.857	Factor for load step #4
5	1.365	Factor for load step #5
6	1.365	Factor for load step #6
7	1.365	Factor for load step #7
8	1.365	Factor for load step #8
9	1.365	Factor for load step #9
10	1.365	Factor for load step #10
11	1.365	Factor for load step #11
12	1.350	Factor for load step #12
13	1.350	Factor for load step #13
14	1.350	Factor for load step #14
15	1.350	Factor for load step #15

+

FINITE ELEMENT OUTPUT FOR LOAD STEP 15

+

CONCRETE, FACTORED-EVALUATION FOR GROUP 1, LOAD-STEP 15

STRUCTURAL RESPONSES OF CONCRETE-GROUP 1, LOAD-STEP 15
COORDINATES, DISPLACEMENTS AND CRACK DEPTHS ARE INCHES
Y-BAR IS "NEUTRAL AXIS" LOCATION FROM INTERIOR, INCHES
PRESSURES ARE LB/IN**2
MOMENTS ARE IN-LB/IN
THRUST AND SHEAR ARE LB/IN

LOCAL NODE	X-COORD. Y-COORD.	X-DISP. Y-DISP.	N-PRES. S-PRES.	MOMENT THRUST	Y-BAR CRACK DEPTH
1	0.00 101.00	0.00000E+00 -0.22007E+01	-0.95542E+01 -0.19333E+00	0.25131E+05 -0.19490E+04	0.73190E+01 0.69881E+01
2	13.43 100.76	-0.89528E-03 -0.21782E+01	-0.98528E+01 -0.14307E+01	0.24640E+05 -0.19711E+04	0.73190E+01 0.69766E+01
3	26.84 100.08	0.11797E-02 -0.21117E+01	-0.10151E+02 -0.26681E+01	0.23091E+05 -0.20031E+04	0.73794E+01 0.69455E+01
4	40.22 98.95	0.88750E-02 -0.20043E+01	-0.10715E+02 -0.37317E+01	0.20444E+05 -0.20536E+04	0.74181E+01 0.68728E+01
5	53.56 97.38	0.24326E-01 -0.18612E+01	-0.11449E+02 -0.41734E+01	0.16620E+05 -0.21175E+04	0.74181E+01 0.67308E+01
6	66.84	0.48816E-01	-0.12483E+02	0.11517E+05	0.74181E+01

	95.38	-0.16902E+01	-0.44715E+01	-0.21900E+04	0.63500E+01
7	80.05	0.82139E-01	-0.13590E+02	0.49815E+04	0.50615E+01
	92.93	-0.15058E+01	-0.46451E+01	-0.22696E+04	0.55116E+00
8	93.16	0.12218E+00	-0.14844E+02	-0.31510E+04	0.20283E+01
	90.05	-0.13192E+01	-0.48220E+01	-0.23558E+04	0.68127E+01
9	106.18	0.16544E+00	-0.16161E+02	-0.13069E+05	0.25648E+01
	86.73	-0.11426E+01	-0.45836E+01	-0.24464E+04	0.65946E+01
10	119.08	0.20701E+00	-0.17130E+02	-0.24968E+05	0.28329E+01
	82.99	-0.99391E+00	-0.42478E+01	-0.25386E+04	0.73480E+01
11	131.84	0.24347E+00	-0.17714E+02	-0.38995E+05	0.34229E+01
	78.82	-0.87760E+00	-0.40238E+01	-0.26331E+04	0.82864E+01
12	144.47	0.27390E+00	-0.18059E+02	-0.55232E+05	0.40506E+01
	74.23	-0.79027E+00	-0.39267E+01	-0.27321E+04	0.10457E+02
13	156.93	0.29893E+00	-0.18864E+02	-0.73743E+05	0.44678E+01
	69.23	-0.72504E+00	-0.38337E+01	-0.28377E+04	0.13522E+02
14	169.22	0.31982E+00	-0.23130E+02	-0.94685E+05	0.55838E+01
	63.82	-0.67508E+00	-0.17803E+02	-0.31080E+04	0.19539E+02
15	171.39	0.34915E+00	-0.10278E+02	-0.83149E+05	0.49926E+01
	54.75	-0.66725E+00	-0.45757E+01	-0.33070E+04	0.13867E+02
16	172.91	0.37086E+00	-0.10337E+02	-0.70362E+05	0.42445E+01
	45.55	-0.66279E+00	-0.45027E+01	-0.32673E+04	0.10632E+02
17	173.78	0.37970E+00	-0.11151E+02	-0.56344E+05	0.36636E+01
	36.26	-0.66093E+00	-0.47464E+01	-0.32164E+04	0.87138E+01
18	174.00	0.37186E+00	-0.12123E+02	-0.41186E+05	0.34579E+01
	26.94	-0.66000E+00	-0.48155E+01	-0.32037E+04	0.79458E+01
19	174.00	0.33241E+00	-0.47783E+01	-0.20159E+05	0.30043E+01
	13.47	-0.65830E+00	-0.22257E+01	-0.32406E+04	0.78391E+01
20	174.00	0.27741E+00	0.25663E+01	0.11528E-09	0.60775E+01
	0.00	-0.65728E+00	0.36417E+00	-0.32846E+04	0.00000E+00

SHEAR FORCE DIAGNOSTCS FOR CONCRETE-GROUP 1, LOAD STEP 15
-- V-factor is coefficient of sqrt(PFPC) equal to capacity.
-- Shear depth "d" is negative if measured from outer wall.
-- Stirrup load is excess shear force above capacity.

NODE	EQUIVALENT V-factor	SHEAR CAPACITY lbs/inch	APPLIED SHEAR lbs/inch	APPLIED/ CAPACITY ratio	SHEAR DEPTH-d inches	STIRRUP LOAD lbs/inch
1	1.83	1179.84	-2.83	0.002	8.00	0.00
2	1.83	1181.03	75.96	0.064	8.00	0.00
3	1.83	1182.74	156.23	0.132	8.00	0.00
4	1.84	1185.46	240.89	0.203	8.00	0.00
5	1.84	1188.90	332.34	0.280	8.00	0.00
6	2.00	1292.78	433.30	0.335	8.00	0.00
7	4.50	2900.32	546.08	0.188	8.00	0.00
8	4.50	2741.89	672.01	0.245	-7.56	0.00
9	3.23	1970.30	812.24	0.412	-7.56	0.00
10	2.16	1423.13	965.22	0.678	-8.19	0.00

11	2.11	1681.48	1126.71	0.670	-9.88	0.00
12	1.82	1873.40	1293.67	0.691	-12.75	0.00
13	1.67	2248.57	1468.86	0.653	-16.75	0.00
14	1.41	2786.91	161.24	0.058	-24.50	0.00
15	1.60	2232.55	-1304.02	0.584	-17.31	0.00
16	1.84	1916.32	-1437.14	0.750	-12.94	0.00
17	2.09	1747.29	-1564.17	0.895	-10.38	0.00
18	2.56	1961.04	-1593.10	0.812	-9.50	0.00
19	3.61	2761.50	-1528.80	0.554	-9.50	0.00
20	4.50	3625.40	-1464.44	0.404	10.00	0.00

ASSESSMENT SUMMARY CONCRETE-GROUP 1, LOAD-STEP 15

LRFD SUMMARY EVALUATION FOR GROUP 1, LOAD STEP 15

DESIGN-CRITERION	CONTROL NODE	FACTORED DEMAND	FACTORED CAPACITY	RATIO VALUE
STEEL YIELDING (psi)	17	42461.6	57000.0	0.745
CONCRETE CRUSHING (psi)	17	3717.3	4875.0	0.763
SHEAR FAILURE (lbs/in)	17	1564.2	1572.6	0.995
RADIAL-TENSION FAIL (psi)	1	7.6	69.6	0.110

LRFD SERVICE-LOAD PERFORMANCE MEASURES FOR GROUP 1, LOAD STEP 15

NODE NUMBER FOR MAXIMUM CRACK WIDTH 17

MAXIMUM CRACK WIDTH AT SERVICE LOAD (inches) 0.00705

LRFD RATIO: MAX-CRACK-WIDTH / ALLOWABLE 0.71

SPAN LENGTH FOR AUXILIARY EQUATIONS (inches)..... 348.00

* * * * NORMAL EXIT FROM CANDE * * * *

*** WELCOME TO CANDE-2013(version 3/1/2013) ***

USER TITLE: 28x8_u8.6_3S2_c2

* * * BOUNDARY CONDITIONS * * *
(FORCES = LBS; DISPLACEMENTS = INCHES; ROTATIONS = DEGREES)

BOUNDARY NODE	LOAD STEP	X-FORCE OR X-DISPLACEMENT	Y-FORCE OR Y-DISPLACEMENT	X-Y ROTATION	BEAM ROTATIONAL BOUNDARY CONDITIONS
290	12	F = 0.0000E+00	F = -0.1900E+02	0.0000E+00	F
290	13	F = 0.0000E+00	F = -0.1900E+02	0.0000E+00	F
290	14	F = 0.0000E+00	F = -0.1900E+02	0.0000E+00	F
290	15	F = 0.0000E+00	F = -0.1900E+02	0.0000E+00	F
293	12	F = 0.0000E+00	F = -0.1900E+02	0.0000E+00	F
293	13	F = 0.0000E+00	F = -0.1900E+02	0.0000E+00	F
293	14	F = 0.0000E+00	F = -0.1900E+02	0.0000E+00	F
293	12	F = 0.0000E+00	F = -0.1900E+02	0.0000E+00	F
296	13	F = 0.0000E+00	F = 0.0000E+00	0.0000E+00	F
296	14	F = 0.0000E+00	F = 0.0000E+00	0.0000E+00	F
296	15	F = 0.0000E+00	F = 0.0000E+00	0.0000E+00	F
296	15	F = 0.0000E+00	F = 0.0000E+00	0.0000E+00	F
287	15	F = 0.0000E+00	F = 0.0000E+00	0.0000E+00	F
288	15	F = 0.0000E+00	F = 0.0000E+00	0.0000E+00	F
289	15	F = 0.0000E+00	F = 0.0000E+00	0.0000E+00	F
290	15	F = 0.0000E+00	F = 0.0000E+00	0.0000E+00	F
291	15	F = 0.0000E+00	F = 0.0000E+00	0.0000E+00	F
292	15	F = 0.0000E+00	F = 0.0000E+00	0.0000E+00	F
293	15	F = 0.0000E+00	F = 0.0000E+00	0.0000E+00	F
294	15	F = 0.0000E+00	F = 0.0000E+00	0.0000E+00	F
295	15	F = 0.0000E+00	F = 0.0000E+00	0.0000E+00	F
296	15	F = 0.0000E+00	F = 0.0000E+00	0.0000E+00	F

LRFD TOTAL LOAD FACTORS PER LOAD STEP

LOAD STEP	LOAD FACTOR	USER COMMENT
1	1.313	Factor for load step #1

Page 1

2	0.857	Factor for load step #2
3	0.857	Factor for load step #3
4	0.857	Factor for load step #4
5	1.365	Factor for load step #5
6	1.365	Factor for load step #6
7	1.365	Factor for load step #7
8	1.365	Factor for load step #8
9	1.365	Factor for load step #9
10	1.365	Factor for load step #10
11	1.365	Factor for load step #11
12	1.350	Factor for load step #12
13	1.350	Factor for load step #13
14	1.350	Factor for load step #14
15	1.350	Factor for load step #15

+ +

FINITE ELEMENT OUTPUT FOR LOAD STEP 15

+ +

CONCRETE, FACTORED-EVALUATION FOR GROUP 1, LOAD-STEP 15

STRUCTURAL RESPONSES OF CONCRETE-GROUP 1, LOAD-STEP 15
COORDINATES, DISPLACEMENTS AND CRACK DEPTHS ARE INCHES
Y-BAR IS "NEUTRAL AXIS" LOCATION FROM INTERIOR, INCHES
PRESSURES ARE LB/IN**2
MOMENTS ARE IN-LB/IN
THRUST AND SHEAR ARE LB/IN

LOCAL NODE	X-COORD. Y-COORD.	X-DISP. Y-DISP.	N-PRES. S-PRES.	MOMENT THRUST	Y-BAR CRACK DEPTH
1	0.00	0.00000E+00	-0.89956E+01	0.24886E+05	0.73190E+01
	101.00	-0.22049E+01	-0.14606E+00	-0.19676E+04	0.69808E+01
2	13.43	-0.91103E-03	-0.95007E+01	0.24437E+05	0.73190E+01
	100.76	-0.21826E+01	-0.12706E+01	-0.19874E+04	0.69702E+01
3	26.84	0.11245E-02	-0.10006E+02	0.23002E+05	0.73855E+01
	100.08	-0.21167E+01	-0.23951E+01	-0.20162E+04	0.69410E+01
4	40.22	0.87511E-02	-0.10788E+02	0.20500E+05	0.74181E+01
	98.95	-0.20101E+01	-0.34334E+01	-0.20626E+04	0.68721E+01
5	53.56	0.24123E-01	-0.11704E+02	0.16813E+05	0.74181E+01
	97.38	-0.18676E+01	-0.39327E+01	-0.21226E+04	0.67372E+01
6	66.84	0.48566E-01	-0.12850E+02	0.11802E+05	0.74181E+01

	95.38	-0.16969E+01	-0.43366E+01	-0.21923E+04	0.63759E+01
7	80.05	0.81894E-01	-0.13988E+02	0.52935E+04	0.50615E+01
	92.93	-0.15124E+01	-0.46349E+01	-0.22708E+04	0.82825E+00
8	93.16	0.12199E+00	-0.15200E+02	-0.28830E+04	0.20283E+01
	90.05	-0.13256E+01	-0.49205E+01	-0.23577E+04	0.67167E+01
9	106.18	0.16543E+00	-0.16421E+02	-0.12908E+05	0.25648E+01
	86.73	-0.11483E+01	-0.47655E+01	-0.24505E+04	0.65820E+01
10	119.08	0.20729E+00	-0.17300E+02	-0.24960E+05	0.28493E+01
	82.99	-0.99859E+00	-0.44760E+01	-0.25458E+04	0.73462E+01
11	131.84	0.24407E+00	-0.17806E+02	-0.39166E+05	0.34229E+01
	78.82	-0.88127E+00	-0.42666E+01	-0.26439E+04	0.82869E+01
12	144.47	0.27483E+00	-0.18051E+02	-0.55595E+05	0.40506E+01
	74.23	-0.79303E+00	-0.41315E+01	-0.27464E+04	0.10458E+02
13	156.93	0.30015E+00	-0.18759E+02	-0.74291E+05	0.44678E+01
	69.23	-0.72705E+00	-0.39651E+01	-0.28547E+04	0.13525E+02
14	169.22	0.32132E+00	-0.22902E+02	-0.95390E+05	0.55838E+01
	63.82	-0.67644E+00	-0.17687E+02	-0.31259E+04	0.19543E+02
15	171.39	0.35107E+00	-0.10250E+02	-0.83772E+05	0.45538E+01
	54.75	-0.66851E+00	-0.45372E+01	-0.33243E+04	0.13908E+02
16	172.91	0.37313E+00	-0.10355E+02	-0.70889E+05	0.42445E+01
	45.55	-0.66399E+00	-0.44782E+01	-0.32835E+04	0.10633E+02
17	173.78	0.38223E+00	-0.11213E+02	-0.56766E+05	0.36636E+01
	36.26	-0.66210E+00	-0.47180E+01	-0.32317E+04	0.87150E+01
18	174.00	0.37453E+00	-0.12184E+02	-0.41498E+05	0.34579E+01
	26.94	-0.66116E+00	-0.47215E+01	-0.32177E+04	0.79475E+01
19	174.00	0.33504E+00	-0.47483E+01	-0.20318E+05	0.30043E+01
	13.47	-0.65945E+00	-0.22209E+01	-0.32539E+04	0.78438E+01
20	174.00	0.27989E+00	0.26874E+01	0.94360E-10	0.60775E+01
	0.00	-0.65843E+00	0.27974E+00	-0.32978E+04	0.00000E+00

SHEAR FORCE DIAGNOSTCS FOR CONCRETE-GROUP 1, LOAD STEP 15
-- V-factor is coefficient of sqrt(PFPC) equal to capacity.
-- Shear depth "d" is negative if measured from outer wall.
-- Stirrup load is excess shear force above capacity.

NODE	EQUIVALENT V-factor	SHEAR CAPACITY lbs/inch	APPLIED SHEAR lbs/inch	APPLIED/ CAPACITY ratio	SHEAR DEPTH-d inches	STIRRUP LOAD lbs/inch
1	1.83	1180.84	-3.36	0.003	8.00	0.00
2	1.83	1181.90	70.15	0.059	8.00	0.00
3	1.83	1183.45	146.59	0.124	8.00	0.00
4	1.84	1185.94	230.41	0.194	8.00	0.00
5	1.84	1189.17	323.83	0.272	8.00	0.00
6	1.95	1255.40	428.85	0.342	8.00	0.00
7	4.39	2831.60	546.70	0.193	8.00	0.00
8	4.50	2741.89	677.64	0.247	-7.56	0.00
9	3.29	2005.62	821.92	0.410	-7.56	0.00
10	2.18	1437.74	977.60	0.680	-8.19	0.00

11	2.11	1682.14	1140.56	0.678	-9.88	0.00
12	1.82	1874.20	1307.66	0.698	-12.75	0.00
13	1.67	2251.39	1481.57	0.658	-16.75	0.00
14	1.41	2787.79	162.70	0.058	-24.50	0.00
15	1.60	2233.44	-1313.56	0.588	-17.31	0.00
16	1.84	1917.23	-1447.91	0.755	-12.94	0.00
17	2.09	1748.21	-1575.69	0.901	-10.38	0.00
18	2.56	1961.13	-1604.68	0.818	-9.50	0.00
19	3.60	2761.05	-1540.40	0.558	-9.50	0.00
20	4.50	3625.40	-1476.44	0.407	10.00	0.00

ASSESSMENT SUMMARY CONCRETE-GROUP 1, LOAD-STEP 15

LRFD SUMMARY EVALUATION FOR GROUP 1, LOAD STEP 15

DESIGN-CRITERION	CONTROL NODE	FACTORED DEMAND	FACTORED CAPACITY	RATIO VALUE
STEEL YIELDING (psi)	17	42797.6	57000.0	0.751
CONCRETE CRUSHING (psi)	17	3733.7	4875.0	0.766
SHEAR FAILURE (lbs/in)	17	1575.7	1573.4	1.001
RADIAL-TENSION FAIL (psi)	1	7.5	69.6	0.108

LRFD SERVICE-LOAD PERFORMANCE MEASURES FOR GROUP 1, LOAD STEP 15

NODE NUMBER FOR MAXIMUM CRACK WIDTH 17

MAXIMUM CRACK WIDTH AT SERVICE LOAD (inches) 0.00719

LRFD RATIO: MAX-CRACK-WIDTH / ALLOWABLE 0.72

SPAN LENGTH FOR AUXILIARY EQUATIONS (inches)..... 348.00

* * * * NORMAL EXIT FROM CANDE * * * *

DELTA
ENGINEERS, ARCHITECTS, & LAND SURVEYORS
860 Hooper Road, Endwell, NY 13760
www.deltaengineers.com
Phone: (607) 231-6600
Fax: (607) 231-6650

JOB	2016.059.009
DESCRIPTION	28x8 under 8 3S2 Case 2
SHEET NO.	OF
SCALE	
CALCULATED BY	
DATE	
CHECKED BY	
DATE	

LRFR LOAD RATING - 3S2 Case 2

Technical Data & Load Factors

Culvert Span (S) =	29.00 ft.	(C to C)	
Crown Radius (Rad) =	33.83 ft.		
Bar Cover			
Outside Face (Cov_{out}) =	2.00 in		
Inside Face (Cov_{in}) =	1.50 in		
Design Section Length (b) =	12 in		
Compressive Strength (f_c) =	6.5 ksi		
Yield Strength (f_y) =	60 ksi		
Stirrup Yield Strength (f_{ystir}) =	60 ksi		
Circumferential Reinforcement Spa. (spa.) =	5.00 in		
Circumferential Reinforcement Provided (n) =	1	(n=1 for 1 layer, n=2 for multiple layers)	AASHTO
Reinforcement Type (Type) =	3	AASHTO Table	12.10.4.2.4d
1 - smooth wire or plain bar		12.10.4.4d-1	
2 - WWF (8" max spa. Smooth)			
3 - WWF (deformed) or bar (deformed)			

Resistance Factors:

ϕf - Flexure =	1.00	AASHTO Table 12.5.5-1
ϕr - Radial Tension =	0.90	
ϕv - Diag Tension =	0.90	
Radial Tension Process (F_{rp}) =	1.00	AASHTO 12.10.4.2.3
Diag Tension Process (F_{vp}) =	1.00	

Load Factors:

	IR	OR	
LL Factor	1.75	1.35	load modification factors already applied to magnitude
γ_pDC (component)	1.31	(1.25*1.05)	
γ_pEH (hor. At rest earth pressure)	0.86	(0.9/1.05)	
γ_pEV	1.37	(1.3*1.05)	
State Trucks		1.45	(ADTT = 280)

Des. By: RJA Chk. By: GSC

DELTA
ENGINEERS, ARCHITECTS, & LAND SURVEYORS
860 Hooper Road, Endwell, NY 13760
www.deltaengineers.com
Phone: (607) 231-6600
Fax: (607) 231-6650

JOB	2016.059.009
DESCRIPTION	28x8 under 8 3S2 Case 2
SHEET NO.	OF
CALCULATED BY	DATE
CHECKED BY	DATE

Design Force Summary

Node Number	Factored DC+EV+EH			Max Factored Total Load			Max Factored LL			Thk at node (in)
	Factored Thrust Nu (k/ft)	Factored Moment Mu (k-in/ft)	Factored Shear Vu (k/ft)	Factored Thrust Nu (k/ft)	Factored Moment Mu (k-in/ft)	Factored Shear Vu (k/ft)	Factored Thrust Nu (k/ft)	Factored Moment Mu (k-in/ft)	Factored Shear Vu (k/ft)	
1	-22.14	275.22	-0.03	-23.61	298.63	-0.04	-1.47	23.41	-0.01	10.000
2	-22.37	270.08	0.80	-23.85	293.24	0.84	-1.48	23.16	0.04	10.000
3	-22.70	253.74	1.66	-24.19	276.02	1.76	-1.49	22.28	0.10	10.000
4	-23.24	225.56	2.58	-24.75	246.00	2.76	-1.51	20.44	0.19	10.000
5	-23.93	184.46	3.59	-25.47	201.76	3.89	-1.54	17.29	0.29	10.000
6	-24.72	129.08	4.72	-26.31	141.62	5.15	-1.59	12.54	0.42	10.000
7	-25.60	57.57	6.00	-27.25	63.52	6.56	-1.65	5.95	0.56	10.000
8	-26.56	-32.02	7.43	-28.29	-34.60	8.13	-1.73	-2.57	0.71	10.063
9	-27.58	-141.89	9.02	-29.41	-154.90	9.86	-1.83	-13.01	0.84	10.063
10	-28.61	-274.38	10.77	-30.55	-299.52	11.73	-1.94	-25.14	0.96	10.688
11	-29.66	-431.26	12.63	-31.73	-469.99	13.69	-2.07	-38.74	1.06	12.375
12	-30.77	-613.57	14.55	-32.96	-667.14	15.69	-2.19	-53.57	1.14	15.250
13	-31.95	-822.16	16.58	-34.26	-891.49	17.78	-2.31	-69.34	1.20	19.250
14	-35.06	-1058.99	1.91	-37.51	-1144.68	1.95	-2.45	-85.69	0.05	27.000
15	-37.39	-930.06	-14.57	-39.89	-1005.26	-15.76	-2.50	-75.20	-1.19	19.813
16	-36.98	-787.22	-16.06	-39.40	-850.67	-17.37	-2.42	-63.44	-1.32	15.438
17	-36.44	-630.60	-17.49	-38.78	-681.19	-18.91	-2.34	-50.59	-1.42	12.875
18	-36.33	-461.04	-17.83	-38.61	-497.98	-19.26	-2.28	-36.94	-1.43	12.000
19	-36.77	-225.56	-17.11	-39.05	-243.82	-18.48	-2.27	-18.25	-1.37	12.000
20	-37.29	0.00	-16.38	-39.57	0.00	-17.72	-2.28	0.00	-1.34	12.000

Note: "-" thrust indicate compression

Des. By: RJA Chk. By: GSC

DELTA
ENGINEERS, ARCHITECTS, & LAND SURVEYORS
860 Hooper Road, Endwell, NY 13760
www.deltaengineers.com
Phone: (607) 231-6600
Fax: (607) 231-6650

JOB 2016.059.009
DESCRIPTION 28x8 under 8 3S2 Case 2
SHEET NO. OF SCALE
CALCULATED BY DATE
CHECKED BY DATE

LRFR LOAD RATING - 3S2 Case 2

Node Number	Total Fac. Nu (k/ft)	Factored DC+EH+EV Nu_D (k/ft)	Mu_D (in-k/ft)	Vu_D (k/ft)	Factored LL Nu_{LL} (k/ft)	$+Mu_{LL}$ (in-k/ft)	Vu_{LL} (k/ft)	Thick (in)
1	-23.61	-22.14	275.22	0.03	-1.47	23.41	0.01	10
2	-23.85	-22.37	270.08	0.80	-1.48	23.16	0.04	10
3	-24.19	-22.70	253.74	1.66	-1.49	22.28	0.10	10
4	-24.75	-23.24	225.56	2.58	-1.51	20.44	0.19	10
5	-25.47	-23.93	184.46	3.59	-1.54	17.29	0.29	10
6	-26.31	-24.72	129.08	4.72	-1.59	12.54	0.42	10
7	-27.25	-25.60	57.57	6.00	-1.65	5.95	0.56	10
8	-28.29	-26.56	-32.02	7.43	-1.73	-2.57	0.71	10.063
9	-29.41	-27.58	-141.89	9.02	-1.83	-13.01	0.84	10.063
10	-30.55	-28.61	-274.38	10.77	-1.94	-25.14	0.96	10.688
11	-31.73	-29.66	-431.26	12.63	-2.07	-38.74	1.06	12.375
12	-32.96	-30.77	-613.57	14.55	-2.19	-53.57	1.14	15.25
13	-34.26	-31.95	-822.16	16.58	-2.31	-69.34	1.20	19.25
14	-37.51	-35.06	-1058.99	1.91	-2.45	-85.69	0.05	27
15	-39.89	-37.39	-930.06	14.57	-2.50	-75.20	1.19	19.813
16	-39.40	-36.98	-787.22	16.06	-2.42	-63.44	1.32	15.438
17	-38.78	-36.44	-630.60	17.49	-2.34	-50.59	1.42	12.875
18	-38.61	-36.33	-461.04	17.83	-2.28	-36.94	1.43	12
19	-39.05	-36.77	-225.56	17.11	-2.27	-18.25	1.37	12
20	-39.57	-37.29	0.00	16.38	-2.28	0.00	1.34	12

note all shear values normalized to positive

Des. By: RJA Chk. By: GSC

DELTA
ENGINEERS, ARCHITECTS, & LAND SURVEYORS
860 Hooper Road, Endwell, NY 13760
www.deltaengineers.com
Phone: (607) 231-6600
Fax: (607) 231-6650

JOB 2016.059.009
DESCRIPTION 28x8 under 8 3S2 Case 2
SHEET NO. OF SCALE
CALCULATED BY DATE
CHECKED BY DATE

Node Number	thk (in)	d (in)	As'in (prov'd) (in^2 / ft)	As'out (prov'd) (in^2 / ft)
1	10.0	8.00	0.92	0.24
2	10.0	8.00	0.92	0.24
3	10.0	8.00	0.92	0.24
4	10.0	8.00	0.92	0.24
5	10.0	8.00	0.92	0.24
6	10.0	8.00	0.92	0.24
7	10.0	8.00	0.92	0.24
8	10.1	7.56	0.92	0.24
9	10.1	7.56	0.92	1.06
10	10.7	8.19	0.24	1.06
11	12.4	9.88	0.48	1.56
12	15.3	12.75	0.48	1.56
13	19.3	16.75	0.48	1.56
14	27.0	24.50	0.48	1.56
15	19.8	17.31	0.48	1.56
16	15.4	12.94	0.48	1.56
17	12.9	10.38	0.48	1.56
18	12.0	9.50	0.48	1.56
19	12.0	9.50	0.48	1.06
20	12.0	9.50	0.48	1.06

Des. By: RJA Chk. By: GSC

DELTA
ENGINEERS, ARCHITECTS, & LAND SURVEYORS
860 Hooper Road, Endwell, NY 13760
www.deltaengineers.com
Phone: (607) 231-6600
Fax: (607) 231-6650

LRFR LOAD RATING - 3S2 Case 2

Node Number	thk (in)	d (in)	As (prov'd) (in^2 / ft)	Total Fac. Nu (k/ft)	Phi Mn (in-k/ft)
1	10.0	8.00	0.92	-23.61	510.52
2	10.0	8.00	0.92	-23.85	511.40
3	10.0	8.00	0.92	-24.19	512.68
4	10.0	8.00	0.92	-24.75	514.74
5	10.0	8.00	0.92	-25.47	517.39
6	10.0	8.00	0.92	-26.31	520.46
7	10.0	8.00	0.92	-27.25	523.91
8	10.1	7.56	0.24	-28.29	236.37
9	10.1	7.56	1.06	-29.41	556.84
10	10.7	8.19	1.06	-30.55	610.00
11	12.4	9.88	1.56	-31.73	992.29
12	15.3	12.75	1.56	-32.96	1313.84
13	19.3	16.75	1.56	-34.26	1763.96
14	27.0	24.50	1.56	-37.51	2659.15
15	19.8	17.31	1.56	-39.89	1870.09
16	15.4	12.94	1.56	-39.40	1370.62
17	12.9	10.38	1.56	-38.78	1077.57
18	12.0	9.50	1.56	-38.61	978.06
19	12.0	9.50	1.06	-39.05	750.52
20	12.0	9.50	1.06	-39.57	752.80

AASHTO 12.10.4.2.4a

g = 0.85 b f'c = 61

$$\phi M_n = \frac{1}{2}\left[g(\phi_f d)^2 - Nu(2\phi_f d - h) - \frac{(g\phi_f d - N_u - A_s F_y)^2}{g} \right]$$

Des. By: RJA Chk. By: GSC

DELTA
ENGINEERS, ARCHITECTS, & LAND SURVEYORS
860 Hooper Road, Endwell, NY 13760
www.deltaengineers.com
Phone: (607) 231-6600
Fax: (607) 231-6650

JOB 2016.059.009
DESCRIPTION 28x8 under 8 3S2 Case 2
SHEET NO. OF SCALE
CALCULATED BY DATE
CHECKED BY DATE

LRFR LOAD RATING - 3S2 Case 2

Node Number	thk (in)	d (in)	Phi Mn (in-k/ft)	Mu_D (in-k/ft)	$+Mu_{LL}$ (in-k/ft)	Inventory Rating	Operating Rating
1	10.0	8.00	510.52	275.22	23.41	10.05	13.03
2	10.0	8.00	511.40	270.08	23.16	10.42	13.51
3	10.0	8.00	512.68	253.74	22.28	11.62	15.06
4	10.0	8.00	514.74	225.56	20.44	14.15	18.34
5	10.0	8.00	517.39	184.46	17.29	19.25	24.96
6	10.0	8.00	520.46	129.08	12.54	31.21	40.46
7	10.0	8.00	523.91	57.57	5.95	78.38	101.60
8	10.1	7.56	236.37	-32.02	-2.57	79.43	102.96
9	10.1	7.56	556.84	-141.89	-13.01	31.90	41.35
10	10.7	8.19	610.00	-274.38	-25.14	13.35	17.31
11	12.4	9.88	992.29	-431.26	-38.74	14.48	18.77
12	15.3	12.75	1313.84	-613.57	-53.57	13.07	16.95
13	19.3	16.75	1763.96	-822.16	-69.34	13.58	17.61
14	27.0	24.50	2659.15	-1058.99	-85.69	18.67	24.21
15	19.8	17.31	1870.09	-930.06	-75.20	12.50	16.20
16	15.4	12.94	1370.62	-787.22	-63.44	9.20	11.92
17	12.9	10.38	1077.57	-630.60	-50.59	8.83	11.45
18	12.0	9.50	978.06	-461.04	-36.94	14.00	18.15
19	12.0	9.50	750.52	-225.56	-18.25	28.76	37.28
20	12.0	9.50	752.80	0.00	0.00	N/A	N/A
					Controlling	**8.83**	**11.45**

g = 0.85 b f'c = 61

$$\phi M_n = \frac{1}{2}\left[g(\phi_f d)^2 - Nu(2\phi_f d - h) - \frac{(g\phi_f d - N_u - A_s F_y)^2}{g} \right]$$

Des. By: RJA Chk. By: GSC

DELTA ENGINEERS
184 Court Street
BINGHAMTON, NEW YORK 13901
(607) 231-6600 Fax 231-6650

JOB 2016.059.009
DESCRIPTION 28x8 under 8 3S2 Case 2
SHEET NO. OF SCALE
CALCULATED BY DATE
CHECKED BY DATE

LRFR LOAD RATING - 3S2 Case 2

Elmt Nmbr	thk (in)	d (in)
1	10.0	8.000
2	10.0	8.000
3	10.0	8.000
4	10.0	8.000
5	10.0	8.000
6	10.0	8.000
7	10.0	8.000
8	10.1	7.563
9	10.1	7.563
10	10.7	8.188
11	12.4	9.875
12	15.3	12.750
13	19.3	16.750
14	27.0	24.500
15	19.8	17.313
16	15.4	12.938
17	12.9	10.375
18	12.0	9.500
19	12.0	9.500
20	12.0	9.500

As (prov'd) (in^2 / ft)	Vtotal (kip/ft)	Vdl only (kip/ft)	Vll only (kip/ft)	Vn=Vc+Vs ϕVn (kip/ft)	1.75 INV	1.35 OPR
0.92	0.04	0.03	0.01	12.75	1927	2498
0.92	0.84	0.80	0.04	12.76	284.1	368.2
0.92	1.76	1.66	0.10	12.78	109.3	141.7
0.92	2.76	2.58	0.19	12.81	55.07	71.38
0.92	3.89	3.59	0.29	12.84	31.47	40.79
0.92	5.15	4.72	0.42	13.56	20.93	27.13
0.92	6.56	6.00	0.56	30.58	43.71	56.66
0.24	8.13	7.43	0.71	29.61	31.44	40.75
1.06	9.86	9.02	0.84	21.66	15.04	19.5
1.06	11.73	10.77	0.96	15.53	4.963	6.434
1.56	13.69	12.63	1.06	18.17	5.232	6.782
1.56	15.69	14.55	1.14	20.24	4.994	6.473
1.56	17.78	16.58	1.20	24.32	6.466	8.382
1.56	1.95	1.91	0.05	30.11	599.5	777.2
1.56	15.76	14.57	1.19	24.12	8.007	10.38
1.56	17.37	16.06	1.32	20.71	3.524	4.568
1.56	18.91	17.49	1.42	47.60	21.19	27.47
1.56	19.26	17.83	1.43	47.75	20.99	27.21
1.06	18.48	17.11	1.37	56.95	29.05	37.66
1.06	17.72	16.38	1.34	66.15	37.18	48.19
				controling:	**3.524**	**4.568**

$$F_d = 0.8 + \frac{1.6}{d} \le 1.3$$

$$F_n = 1 + \frac{N_u}{24 * thk}$$

$$\rho = \frac{A_s}{\phi bd} \le 0.02$$

$$\phi V_n = \phi 0.0316 b d F_{vp} \sqrt{f'c}\left(1.1 + 63\rho\right)\left(\frac{F_d F_n}{F_c}\right)$$

$$F_c = 1 \pm \left(\frac{d}{2 * rad}\right)$$

Shear Resistance With Stirrups **AASHTO 12.10.4.2.5**

Des. By: RJA Chk. By: GSC

DELTA ENGINEERS
184 Court Street
BINGHAMTON, NEW YORK 13901
(607) 231-6600 Fax 231-6650

JOB 2016.059.009
DESCRIPTION 28x8 under 8 3S2 Case 2
SHEET NO. OF SCALE 0
CALCULATED BY DATE
CHECKED BY DATE

Arch Design

Positive Moment Design (cont.)

Shear Resistance With Radial Stirrups **AASHTO 12.10.4.2.6**

Element Number	thk (in)	d (in)	Sv MAX (in)	Sv Act (in)	Avr (in^2 / ft)	Sv MAX (in)	Sv Act (in)	Avs (in^2 / ft)	ϕVs (k/ft)
1	10.0	8.13	5.48	0.00	0.00	5.48	0.00	0.00	0
2	10.0	8.13	5.48	0.00	0.00	5.48	0.00	0.00	0
3	10.0	8.13	5.48	0.00	0.00	5.48	0.00	0.00	0
4	10.0	8.13	5.48	0.00	0.00	5.48	0.00	0.00	0
5	10.0	8.13	5.48	0.00	0.00	5.48	0.00	0.00	0
6	10.0	8.13	5.48	0.00	0.00	5.48	0.00	0.00	0
7	10.0	8.13	5.48	0.00	0.00	5.48	0.00	0.00	0
8	10.1	7.69	5.19	0.00	0.00	5.19	0.00	0.00	0
9	10.1	7.69	5.19	0.00	0.00	5.19	0.00	0.00	0
10	10.7	8.31	5.61	0.00	0.00	5.61	0.00	0.00	0
11	12.4	10.00	6.75	0.00	0.00	6.75	0.00	0.00	0
12	15.3	12.88	8.69	0.00	0.00	8.69	0.00	0.00	0
13	19.3	16.88	11.39	0.00	0.00	11.39	0.00	0.00	0
14	27.0	24.63	16.62	0.00	0.00	16.62	0.00	0.00	0
15	19.8	17.44	11.77	0.00	0.00	11.77	0.00	0.00	0
16	15.4	13.06	8.82	0.00	0.00	8.82	0.00	0.00	0
17	12.9	10.50	7.09	4.50	0.01	7.09	4.50	0.02	28.72
18	12.0	9.63	6.50	4.50	0.01	6.50	4.50	0.04	26.57
19	12.0	9.63	6.50	4.50	0.00	6.50	4.50	0.03	27.13
20	12.0	9.63	6.50	4.50	0.00	6.50	4.50	0.01	26.99

For Radial Tension

$$A_{vr} = \frac{1.1 s_v \left(M_u - 0.45 N_u \phi_r d\right)}{f_y r_s \phi_r d}$$

$$s_v \le 0.75 \phi_r d$$

For Shear

$$A_{vs} = \frac{1.1 s_v}{f_y \phi_v d}\left(V_u F_c - V_c\right) + A_{vr}$$

$$V_c = \frac{4V_r}{\frac{M_{nu}}{V_u d} + 1} \le 0.0633 \phi_v b d \sqrt{f'_c}$$

Mnu=Mu-Nu(4h-d)/8

rearanging Avs equation above and

taking Fc =1.0, Vs = (Avs-Avr)*Fys*ϕv*d/(1.1*Sv) (<8*√F'c*Bw*d)

(#3@4.5")

As provided = 0.293 sq.in. / L.F.

Des. By: RJA Chk. By: GSC

DELTA
ENGINEERS, ARCHITECTS, & LAND SURVEYORS
860 Hooper Road, Endwell, NY 13760
www.deltaengineers.com
Phone: (607) 231-6600
Fax: (607) 231-6650

JOB	2016.059.009		
DESCIPTION	28x8u8.6		
SHEET NO.	OF	SCALE	
CALCULATED BY		DATE	
CHECKED BY		DATE	

span 28 ft

leg thickness 12 inches

traffic parallel with main reinforcement

6A TRUCK

Axle applied at center (1/2 magnitude since mirrored)

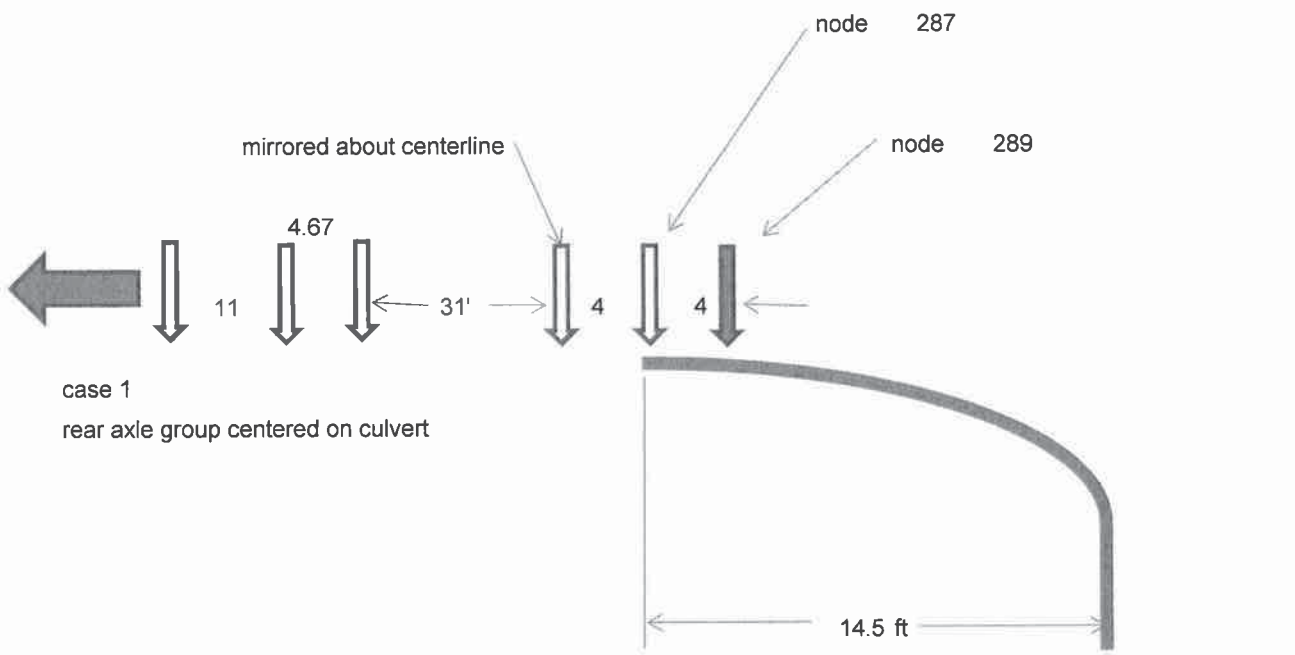

case 1

rear axle group centered on culvert

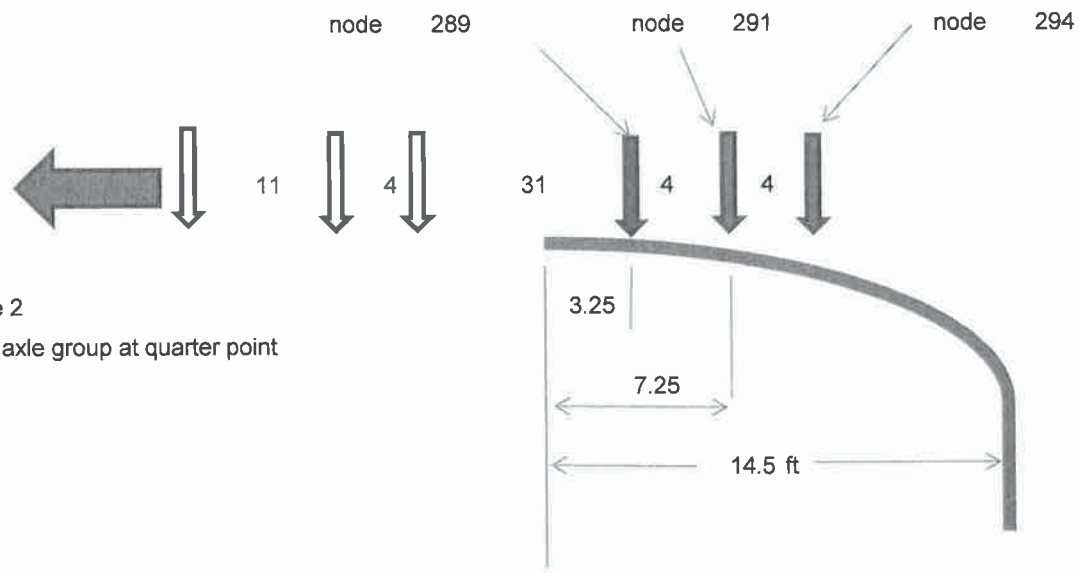

case 2

rear axle group at quarter point

Des. By: RJA Chk. By: GSC

DELTA
ENGINEERS, ARCHITECTS, & LAND SURVEYORS
860 Hooper Road, Endwell, NY 13760
www.deltaengineers.com
Phone: (607) 231-6600
Fax: (607) 231-6650

JOB 2016.059.009
DESCIPTION 28x8u8.6
SHEET NO. ____ OF ____ SCALE ____
CALCULATED BY ____ DATE ____
CHECKED BY ____ DATE ____

6A truck 8.6 ft earth cover (controls)

Load Case	Description	
1	6A	truck at center
2	6A	truck at quarter point

Boundary conditions

Case 1			Case 2		
node	step	force	node	step	force
287✓	12	-14.30	291✓	12	-28.50
287	13	-14.30	291	13	-28.50
287	14	-14.30	291	14	-28.50
287	15	-14.30	291	15	-28.50
289✓	12	-28.50	289✓	12	-28.50
289	13	-28.50	289	13	-28.50
289	14	-28.50	289	14	-28.50
289	12	-28.50	289	12	-28.50
294	13	0.00	294✓	13	-28.50
294	14	0.00	294	14	-28.50
294	15	0.00	294	15	-28.50
294	15	0.00	294	15	-28.50

capacity demand ratio

	Case 1		Case 2		
failure mode	node	ratio	node	ratio	
steel yeilding	1	0.782	17	0.823	
concrete crushing	17	0.781	17	0.809	Controls
shear failure	17	1.038	17	1.087	
radial tension failure	1	0.121	1	0.122	

Des. By: RJA Chk. By: GSC

*** WELCOME TO CANDE-2013(version 3/1/2013) ***

USER TITLE: 28x8_u8.6_6A_c1

* * * BOUNDARY CONDITIONS * * *
(FORCES = LBS; DISPLACEMENTS = INCHES; ROTATIONS = DEGREES)

BOUNDARY NODE	LOAD STEP	X-FORCE OR X-DISPLACEMENT	Y-FORCE OR Y-DISPLACEMENT	X-Y ROTATION BEAM ROTATIONAL BOUNDARY CONDITIONS
287	12	F = 0.0000E+00	F = -0.1430E+02	0.0000E+00 F
287	13	F = 0.0000E+00	F = -0.1430E+02	0.0000E+00 F
287	14	F = 0.0000E+00	F = -0.1430E+02	0.0000E+00 F
287	15	F = 0.0000E+00	F = -0.1430E+02	0.0000E+00 F
289	12	F = 0.0000E+00	F = -0.2850E+02	0.0000E+00 F
289	13	F = 0.0000E+00	F = -0.2850E+02	0.0000E+00 F
289	14	F = 0.0000E+00	F = -0.2850E+02	0.0000E+00 F
289	12	F = 0.0000E+00	F = -0.2850E+02	0.0000E+00 F
294	13	F = 0.0000E+00	F = 0.0000E+00	0.0000E+00 F
294	14	F = 0.0000E+00	F = 0.0000E+00	0.0000E+00 F
294	15	F = 0.0000E+00	F = 0.0000E+00	0.0000E+00 F
294	15	F = 0.0000E+00	F = 0.0000E+00	0.0000E+00 F
287	15	F = 0.0000E+00	F = 0.0000E+00	0.0000E+00 F
288	15	F = 0.0000E+00	F = 0.0000E+00	0.0000E+00 F
289	15	F = 0.0000E+00	F = 0.0000E+00	0.0000E+00 F
290	15	F = 0.0000E+00	F = 0.0000E+00	0.0000E+00 F
291	15	F = 0.0000E+00	F = 0.0000E+00	0.0000E+00 F
292	15	F = 0.0000E+00	F = 0.0000E+00	0.0000E+00 F
293	15	F = 0.0000E+00	F = 0.0000E+00	0.0000E+00 F
294	15	F = 0.0000E+00	F = 0.0000E+00	0.0000E+00 F
295	15	F = 0.0000E+00	F = 0.0000E+00	0.0000E+00 F
296	15	F = 0.0000E+00	F = 0.0000E+00	0.0000E+00 F

LRFD TOTAL LOAD FACTORS PER LOAD STEP

LOAD STEP	LOAD FACTOR	USER COMMENT
1	1.313	Factor for load step #1

2	0.857	Factor for load step #2
3	0.857	Factor for load step #3
4	0.857	Factor for load step #4
5	1.365	Factor for load step #5
6	1.365	Factor for load step #6
7	1.365	Factor for load step #7
8	1.365	Factor for load step #8
9	1.365	Factor for load step #9
10	1.365	Factor for load step #10
11	1.365	Factor for load step #11
12	1.350	Factor for load step #12
13	1.350	Factor for load step #13
14	1.350	Factor for load step #14
15	1.350	Factor for load step #15

\+ +

FINITE ELEMENT OUTPUT FOR LOAD STEP 15

\+ +

CONCRETE, FACTORED-EVALUATION FOR GROUP 1, LOAD-STEP 15

STRUCTURAL RESPONSES OF CONCRETE-GROUP 1, LOAD-STEP 15
COORDINATES, DISPLACEMENTS AND CRACK DEPTHS ARE INCHES
Y-BAR IS "NEUTRAL AXIS" LOCATION FROM INTERIOR, INCHES
PRESSURES ARE LB/IN**2
MOMENTS ARE IN-LB/IN
THRUST AND SHEAR ARE LB/IN

LOCAL NODE	X-COORD. Y-COORD.	X-DISP. Y-DISP.	N-PRES. S-PRES.	MOMENT THRUST	Y-BAR CRACK DEPTH
1	0.00 101.00	0.00000E+00 -0.23178E+01	-0.10755E+02 -0.21083E+00	0.27462E+05 -0.19868E+04	0.74705E+01 0.70300E+01
2	13.43 100.76	-0.89490E-03 -0.22931E+01	-0.10928E+02 -0.16497E+01	0.26881E+05 -0.20123E+04	0.73190E+01 0.69987E+01
3	26.84 100.08	0.14747E-02 -0.22202E+01	-0.11101E+02 -0.30886E+01	0.25066E+05 -0.20492E+04	0.73190E+01 0.69669E+01
4	40.22 98.95	0.99771E-02 -0.21028E+01	-0.11534E+02 -0.42857E+01	0.22002E+05 -0.21073E+04	0.74181E+01 0.68993E+01
5	53.56 97.38	0.26887E-01 -0.19469E+01	-0.12105E+02 -0.47703E+01	0.17638E+05 -0.21803E+04	0.74181E+01 0.67529E+01
6	66.84 95.38	0.53519E-01 -0.17615E+01	-0.12965E+02 -0.51143E+01	0.11904E+05 -0.22626E+04	0.74181E+01 0.63547E+01

7	80.05	0.89585E-01	-0.13911E+02	0.46823E+04	0.50615E+01
	92.93	-0.15621E+01	-0.52600E+01	-0.23523E+04	0.10134E+00
8	93.16	0.13280E+00	-0.15040E+02	-0.41571E+04	0.20283E+01
	90.05	-0.13609E+01	-0.53589E+01	-0.24480E+04	0.70354E+01
9	106.18	0.17921E+00	-0.16241E+02	-0.14776E+05	0.25648E+01
	86.73	-0.11717E+01	-0.50301E+01	-0.25469E+04	0.66690E+01
10	119.08	0.22335E+00	-0.17099E+02	-0.27347E+05	0.28493E+01
	82.99	-0.10139E+01	-0.45780E+01	-0.26459E+04	0.73710E+01
11	131.84	0.26168E+00	-0.17598E+02	-0.41991E+05	0.35466E+01
	78.82	-0.89170E+00	-0.42017E+01	-0.27453E+04	0.83071E+01
12	144.47	0.29340E+00	-0.17881E+02	-0.58775E+05	0.40506E+01
	74.23	-0.80067E+00	-0.39467E+01	-0.28471E+04	0.10475E+02
13	156.93	0.31927E+00	-0.18686E+02	-0.77750E+05	0.44678E+01
	69.23	-0.73317E+00	-0.36645E+01	-0.29528E+04	0.13546E+02
14	169.22	0.34073E+00	-0.22895E+02	-0.99073E+05	0.55838E+01
	63.82	-0.68176E+00	-0.16854E+02	-0.32058E+04	0.19572E+02
15	171.39	0.37076E+00	-0.10712E+02	-0.86878E+05	0.45538E+01
	54.75	-0.67374E+00	-0.45141E+01	-0.33854E+04	0.13935E+02
16	172.91	0.39281E+00	-0.10898E+02	-0.73417E+05	0.42445E+01
	45.55	-0.66919E+00	-0.44417E+01	-0.33400E+04	0.10642E+02
17	173.78	0.40140E+00	-0.11826E+02	-0.58727E+05	0.36636E+01
	36.26	-0.66734E+00	-0.47105E+01	-0.32837E+04	0.87234E+01
18	174.00	0.39258E+00	-0.12782E+02	-0.42912E+05	0.34579E+01
	26.94	-0.66640E+00	-0.45487E+01	-0.32659E+04	0.79583E+01
19	174.00	0.35047E+00	-0.48265E+01	-0.21018E+05	0.30043E+01
	13.47	-0.66467E+00	-0.21667E+01	-0.33001E+04	0.78676E+01
20	174.00	0.29215E+00	0.31290E+01	0.17485E-09	0.60775E+01
	0.00	-0.66363E+00	0.21541E+00	-0.33433E+04	0.00000E+00

SHEAR FORCE DIAGNOSTCS FOR CONCRETE-GROUP 1, LOAD STEP 15
-- V-factor is coefficient of sqrt(PFPC) equal to capacity.
-- Shear depth "d" is negative if measured from outer wall.
-- Stirrup load is excess shear force above capacity.

NODE	EQUIVALENT V-factor	SHEAR CAPACITY lbs/inch	APPLIED SHEAR lbs/inch	APPLIED/ CAPACITY ratio	SHEAR DEPTH-d inches	STIRRUP LOAD lbs/inch
1	1.83	1181.87	-2.65	0.002	8.00	0.00
2	1.83	1183.24	89.21	0.075	8.00	0.00
3	1.84	1185.23	181.64	0.153	8.00	0.00
4	1.84	1188.35	276.53	0.233	8.00	0.00
5	1.85	1192.27	375.96	0.315	8.00	0.00
6	2.12	1368.22	482.33	0.353	8.00	0.00
7	4.50	2900.32	597.92	0.206	8.00	0.00
8	4.50	2741.89	724.44	0.264	-7.56	0.00
9	3.08	1875.09	863.34	0.460	-7.56	0.00
10	2.09	1378.20	1013.21	0.735	-8.19	0.00
11	2.12	1688.37	1170.08	0.693	-9.88	0.00

12	1.83	1879.88	1331.30	0.708	-12.75	0.00
13	1.63	2201.15	1500.29	0.682	-16.75	0.00
14	1.41	2791.69	140.07	0.050	-24.50	0.00
15	1.60	2236.62	-1375.42	0.615	-17.31	0.00
16	1.84	1920.40	-1509.23	0.786	-12.94	0.00
17	2.09	1751.34	-1635.43	0.934	-10.38	0.00
18	2.56	1962.84	-1660.55	0.846	-9.50	0.00
19	3.60	2758.10	-1592.89	0.578	-9.50	0.00
20	4.50	3625.40	-1527.88	0.421	10.00	0.00

ASSESSMENT SUMMARY CONCRETE-GROUP 1, LOAD-STEP 15

LRFD SUMMARY EVALUATION FOR GROUP 1, LOAD STEP 15

DESIGN-CRITERION	CONTROL NODE	FACTORED DEMAND	FACTORED CAPACITY	RATIO VALUE
STEEL YIELDING (psi)	1	44562.1	57000.0	0.782
CONCRETE CRUSHING (psi)	17	3808.3	4875.0	0.781
SHEAR FAILURE (lbs/in)	17	1635.4	1576.2	1.038
RADIAL-TENSION FAIL (psi)	1	8.5	69.6	0.121

LRFD SERVICE-LOAD PERFORMANCE MEASURES FOR GROUP 1, LOAD STEP 15

NODE NUMBER FOR MAXIMUM CRACK WIDTH 17

MAXIMUM CRACK WIDTH AT SERVICE LOAD (inches) 0.00786

LRFD RATIO: MAX-CRACK-WIDTH / ALLOWABLE 0.79

SPAN LENGTH FOR AUXILIARY EQUATIONS (inches)..... 348.00

* * * * NORMAL EXIT FROM CANDE * * * *

*** WELCOME TO CANDE-2013(version 3/1/2013) ***

USER TITLE: 28x8_u8.6_6A_c2

* * * BOUNDARY CONDITIONS * * *
(FORCES = LBS; DISPLACEMENTS = INCHES; ROTATIONS = DEGREES)

BOUNDARY BEAM NODE	LOAD STEP	X-FORCE OR X-DISPLACEMENT	Y-FORCE OR Y-DISPLACEMENT	X-Y ROTATION ROTATIONAL BOUNDARY CONDITIONS
291	12	F = 0.0000E+00	F = -0.2850E+02	0.0000E+00
F 291	13	F = 0.0000E+00	F = -0.2850E+02	0.0000E+00
F 291	14	F = 0.0000E+00	F = -0.2850E+02	0.0000E+00
F 291	15	F = 0.0000E+00	F = -0.2850E+02	0.0000E+00
F 289	12	F = 0.0000E+00	F = -0.2850E+02	0.0000E+00
F 289	13	F = 0.0000E+00	F = -0.2850E+02	0.0000E+00
F 289	14	F = 0.0000E+00	F = -0.2850E+02	0.0000E+00
F 289	12	F = 0.0000E+00	F = -0.2850E+02	0.0000E+00
F 294	13	F = 0.0000E+00	F = -0.2850E+02	0.0000E+00
F 294	14	F = 0.0000E+00	F = -0.2850E+02	0.0000E+00
F 294	15	F = 0.0000E+00	F = -0.2850E+02	0.0000E+00
F 294	15	F = 0.0000E+00	F = -0.2850E+02	0.0000E+00
F 287	15	F = 0.0000E+00	F = 0.0000E+00	0.0000E+00
F 288	15	F = 0.0000E+00	F = 0.0000E+00	0.0000E+00
F 289	15	F = 0.0000E+00	F = 0.0000E+00	0.0000E+00
F 290	15	F = 0.0000E+00	F = 0.0000E+00	0.0000E+00
F 291	15	F = 0.0000E+00	F = 0.0000E+00	0.0000E+00
F 292	15	F = 0.0000E+00	F = 0.0000E+00	0.0000E+00
F 293	15	F = 0.0000E+00	F = 0.0000E+00	0.0000E+00
F 294	15	F = 0.0000E+00	F = 0.0000E+00	0.0000E+00
F 295	15	F = 0.0000E+00	F = 0.0000E+00	0.0000E+00
F 296	15	F = 0.0000E+00	F = 0.0000E+00	0.0000E+00
F				

LRFD TOTAL LOAD FACTORS PER LOAD STEP

LOAD STEP	LOAD FACTOR	USER COMMENT
1	1.313	Factor for load step #1

2	0.857	Factor for load step #2
3	0.857	Factor for load step #3
4	0.857	Factor for load step #4
5	1.365	Factor for load step #5
6	1.365	Factor for load step #6
7	1.365	Factor for load step #7
8	1.365	Factor for load step #8
9	1.365	Factor for load step #9
10	1.365	Factor for load step #10
11	1.365	Factor for load step #11
12	1.350	Factor for load step #12
13	1.350	Factor for load step #13
14	1.350	Factor for load step #14
15	1.350	Factor for load step #15

+ +

FINITE ELEMENT OUTPUT FOR LOAD STEP 15

+ +

CONCRETE, FACTORED-EVALUATION FOR GROUP 1, LOAD-STEP 15

STRUCTURAL RESPONSES OF CONCRETE-GROUP 1, LOAD-STEP 15
COORDINATES, DISPLACEMENTS AND CRACK DEPTHS ARE INCHES
Y-BAR IS "NEUTRAL AXIS" LOCATION FROM INTERIOR, INCHES
PRESSURES ARE LB/IN**2
MOMENTS ARE IN-LB/IN
THRUST AND SHEAR ARE LB/IN

LOCAL NODE	X-COORD. Y-COORD.	X-DISP. Y-DISP.	N-PRES. S-PRES.	MOMENT THRUST	Y-BAR CRACK DEPTH
1	0.00	0.00000E+00	-0.10066E+02	0.27779E+05	0.73190E+01
	101.00	-0.24123E+01	-0.13746E+00	-0.21110E+04	0.69914E+01
2	13.43	-0.96193E-03	-0.10614E+02	0.27268E+05	0.73190E+01
	100.76	-0.23873E+01	-0.13885E+01	-0.21327E+04	0.69810E+01
3	26.84	0.13810E-02	-0.11163E+02	0.25632E+05	0.73190E+01
	100.08	-0.23134E+01	-0.26396E+01	-0.21644E+04	0.69522E+01
4	40.22	0.99877E-02	-0.11997E+02	0.22788E+05	0.73766E+01
	98.95	-0.21938E+01	-0.37777E+01	-0.22156E+04	0.68928E+01
5	53.56	0.27246E-01	-0.12949E+02	0.18609E+05	0.74181E+01
	97.38	-0.20344E+01	-0.43382E+01	-0.22818E+04	0.67607E+01
6	66.84	0.54604E-01	-0.14117E+02	0.12952E+05	0.74181E+01

	95.38	-0.18437E+01	-0.47894E+01	-0.23589E+04	0.64060E+01
7	80.05	0.91835E-01	-0.15262E+02	0.56430E+04	0.50615E+01
	92.93	-0.16379E+01	-0.51213E+01	-0.24457E+04	0.84992E+00
8	93.16	0.13659E+00	-0.16458E+02	-0.34863E+04	0.20283E+01
	90.05	-0.14295E+01	-0.54436E+01	-0.25418E+04	0.68254E+01
9	106.18	0.18500E+00	-0.17659E+02	-0.14610E+05	0.25648E+01
	86.73	-0.12322E+01	-0.53742E+01	-0.26448E+04	0.66299E+01
10	119.08	0.23150E+00	-0.18508E+02	-0.27896E+05	0.28493E+01
	82.99	-0.10660E+01	-0.51107E+01	-0.27515E+04	0.73597E+01
11	131.84	0.27224E+00	-0.18948E+02	-0.43464E+05	0.35466E+01
	78.82	-0.93620E+00	-0.48890E+01	-0.28614E+04	0.83009E+01
12	144.47	0.30625E+00	-0.19093E+02	-0.61363E+05	0.40506E+01
	74.23	-0.83872E+00	-0.47012E+01	-0.29755E+04	0.10477E+02
13	156.93	0.33422E+00	-0.19721E+02	-0.81616E+05	0.44678E+01
	69.23	-0.76583E+00	-0.45152E+01	-0.30951E+04	0.13554E+02
14	169.22	0.35762E+00	-0.23856E+02	-0.10434E+06	0.55838E+01
	63.82	-0.70985E+00	-0.18576E+02	-0.33786E+04	0.19581E+02
15	171.39	0.39060E+00	-0.10710E+02	-0.91612E+05	0.45538E+01
	54.75	-0.70107E+00	-0.46458E+01	-0.35797E+04	0.13939E+02
16	172.91	0.41516E+00	-0.11029E+02	-0.77491E+05	0.42445E+01
	45.55	-0.69604E+00	-0.46662E+01	-0.35311E+04	0.10637E+02
17	173.78	0.42551E+00	-0.12135E+02	-0.62027E+05	0.36636E+01
	36.26	-0.69396E+00	-0.49253E+01	-0.34710E+04	0.87203E+01
18	174.00	0.41743E+00	-0.13338E+02	-0.45341E+05	0.34579E+01
	26.94	-0.69294E+00	-0.47293E+01	-0.34511E+04	0.79556E+01
19	174.00	0.37469E+00	-0.50020E+01	-0.22217E+05	0.30043E+01
	13.47	-0.69111E+00	-0.23268E+01	-0.34863E+04	0.78724E+01
20	174.00	0.31479E+00	0.33339E+01	-0.20464E-11	0.60775E+01
	0.00	-0.69001E+00	0.75615E-01	-0.35316E+04	0.00000E+00

SHEAR FORCE DIAGNOSTCS FOR CONCRETE-GROUP 1, LOAD STEP 15
-- V-factor is coefficient of sqrt(PFPC) equal to capacity.
-- Shear depth "d" is negative if measured from outer wall.
-- Stirrup load is excess shear force above capacity.

NODE	EQUIVALENT V-factor	SHEAR CAPACITY lbs/inch	APPLIED SHEAR lbs/inch	APPLIED/ CAPACITY ratio	SHEAR DEPTH-d inches	STIRRUP LOAD lbs/inch
1	1.84	1188.55	-3.76	0.003	8.00	0.00
2	1.84	1189.71	79.91	0.067	8.00	0.00
3	1.85	1191.42	166.75	0.140	8.00	0.00
4	1.85	1194.17	261.48	0.219	8.00	0.00
5	1.86	1197.73	366.22	0.306	8.00	0.00
6	1.99	1284.38	482.72	0.376	8.00	0.00
7	4.50	2900.32	611.98	0.211	8.00	0.00
8	4.50	2741.89	754.00	0.275	-7.56	0.00
9	3.24	1976.34	908.77	0.460	-7.56	0.00
10	2.16	1427.17	1074.26	0.753	-8.19	0.00

11	2.13	1695.50	1245.99	0.735	-9.88	0.00
12	1.84	1887.12	1420.38	0.753	-12.75	0.00
13	1.65	2234.76	1599.98	0.716	-16.75	0.00
14	1.42	2800.12	163.68	0.058	-24.50	0.00
15	1.61	2246.73	-1439.37	0.641	-17.31	0.00
16	1.85	1931.12	-1586.16	0.821	-12.94	0.00
17	2.11	1762.64	-1723.64	0.978	-10.38	0.00
18	2.58	1974.88	-1752.89	0.888	-9.50	0.00
19	3.62	2776.12	-1683.03	0.606	-9.50	0.00
20	4.50	3444.13	-1615.65	0.469	-9.50	0.00

ASSESSMENT SUMMARY CONCRETE-GROUP 1, LOAD-STEP 15

LRFD SUMMARY EVALUATION FOR GROUP 1, LOAD STEP 15

DESIGN-CRITERION	CONTROL NODE	FACTORED DEMAND	FACTORED CAPACITY	RATIO VALUE
STEEL YIELDING (psi)	17	46925.8	57000.0	0.823
CONCRETE CRUSHING (psi)	17	3943.1	4875.0	0.809
SHEAR FAILURE (lbs/in)	17	1723.6	1586.4	1.087
RADIAL-TENSION FAIL (psi)	1	8.5	69.6	0.122

LRFD SERVICE-LOAD PERFORMANCE MEASURES FOR GROUP 1, LOAD STEP 15

NODE NUMBER FOR MAXIMUM CRACK WIDTH 17

MAXIMUM CRACK WIDTH AT SERVICE LOAD (inches) 0.00894

LRFD RATIO: MAX-CRACK-WIDTH / ALLOWABLE 0.89

SPAN LENGTH FOR AUXILIARY EQUATIONS (inches)..... 348.00

* * * * NORMAL EXIT FROM CANDE * * * *

DELTA
ENGINEERS, ARCHITECTS, & LAND SURVEYORS
860 Hooper Road, Endwell, NY 13760
www.deltaengineers.com
Phone: (607) 231-6600
Fax: (607) 231-6650

JOB	2016.059.009		
DESCRIPTION	28x8 under 8: 6A Case 2		
SHEET NO.	OF	SCALE	
CALCULATED BY	GSC	DATE	7/28/2016
CHECKED BY		DATE	

LRFR LOAD RATING - 6A Case 2

Technical Data & Load Factors

Culvert Span (S) =	29.00 ft.	(C to C)	
Crown Radius (Rad) =	33.83 ft.		
Bar Cover			
Outside Face (Cov_{out}) =	2.00 in		
Inside Face (Cov_{in}) =	1.50 in		
Design Section Length (b) =	12 in		
Compressive Strength (f_c) =	6.5 ksi		
Yield Strength (f_y) =	60 ksi		
Stirrup Yield Strength (f_{ystir}) =	60 ksi		
Circumferential Reinforcement Spa. (spa.) =	5.00 in		
Circumferential Reinforcement Provided (n) =	1	(n=1 for 1 layer, n=2 for multiple layers)	AASHTO
Reinforcement Type (Type) =	3	AASHTO Table	12.10.4.2.4d
1 - smooth wire or plain bar		12.10.4.4d-1	
2 - WWF (8" max spa. Smooth)			
3 - WWF (deformed) or bar (deformed)			

Resistance Factors:

ϕf - Flexure =	1.00	AASHTO Table 12.5.5-1
ϕr - Radial Tension =	0.90	AASHTO Table 12.5.5-1
ϕv - Diag Tension =	0.90	AASHTO Table 12.5.5-1
Radial Tension Process (F_{rp}) =	1.00	AASHTO 12.10.4.2.3
Diag Tension Process (F_{vp}) =	1.00	AASHTO 12.10.4.2.3

Load Factors:

	IR	OR	
LL Factor	1.75	1.35	load modification factors already applied to magnitude
γ_pDC (component)	1.31	(1.25*1.05)	
γ_pEH (hor. At rest earth pressure)	0.86	(0.9/1.05)	
γ_pEV	1.37	(1.3*1.05)	
State Trucks		1.45	(ADTT = 280)

Des. By: RJA Chk. By: GSC

DELTA
ENGINEERS, ARCHITECTS, & LAND SURVEYORS
860 Hooper Road, Endwell, NY 13760
www.deltaengineers.com
Phone: (607) 231-6600
Fax: (607) 231-6650

JOB	2016.059.009		
DESCRIPTION	28x8 under 8: 6A Case 2		
SHEET NO.		OF	
CALCULATED BY	GSC	DATE	7/21/2016
CHECKED BY		DATE	

Design Force Summary

	Factored DC+EV+EH			Max Factored Total Load			Max Factored LL			
Node Number	Factored Thrust Nu (k/ft)	Factored Moment Mu (k-in/ft)	Factored Shear Vu (k/ft)	Factored Thrust Nu (k/ft)	Factored Moment Mu (k-in/ft)	Factored Shear Vu (k/ft)	Factored Thrust Nu (k/ft)	Factored Moment Mu (k-in/ft)	Factored Shear Vu (k/ft)	Thk at node (in)
1	-22.14	275.22	-0.03	-25.33	333.35	-0.05	-3.20	58.13	-0.01	10.000
2	-22.37	270.08	0.80	-25.59	327.22	0.96	-3.22	57.13	0.16	10.000
3	-22.70	253.74	1.66	-25.97	307.58	2.00	-3.27	53.84	0.34	10.000
4	-23.24	225.56	2.58	-26.59	273.46	3.14	-3.35	47.89	0.56	10.000
5	-23.93	184.46	3.59	-27.38	223.31	4.39	-3.45	38.84	0.80	10.000
6	-24.72	129.08	4.72	-28.31	155.42	5.79	-3.59	26.34	1.07	10.000
7	-25.60	57.57	6.00	-29.35	67.72	7.34	-3.75	10.14	1.35	10.000
8	-26.56	-32.02	7.43	-30.50	-41.84	9.05	-3.94	-9.81	1.62	10.063
9	-27.58	-141.89	9.02	-31.74	-175.32	10.91	-4.16	-33.43	1.88	10.063
10	-28.61	-274.38	10.77	-33.02	-334.75	12.89	-4.41	-60.37	2.12	10.688
11	-29.66	-431.26	12.63	-34.34	-521.57	14.95	-4.68	-90.31	2.32	12.375
12	-30.77	-613.57	14.55	-35.71	-736.36	17.04	-4.94	-122.78	2.49	15.250
13	-31.95	-822.16	16.58	-37.14	-979.39	19.20	-5.20	-157.24	2.62	19.250
14	-35.06	-1058.99	1.91	-40.54	-1252.08	1.96	-5.49	-193.09	0.06	27.000
15	-37.39	-930.06	-14.57	-42.96	-1099.34	-17.27	-5.56	-169.28	-2.70	19.813
16	-36.98	-787.22	-16.06	-42.37	-929.89	-19.03	-5.39	-142.67	-2.98	15.438
17	-36.44	-630.60	-17.49	-41.65	-744.32	-20.68	-5.21	-113.72	-3.20	12.875
18	-36.33	-461.04	-17.83	-41.41	-544.09	-21.03	-5.08	-83.05	-3.20	12.000
19	-36.77	-225.56	-17.11	-41.84	-266.60	-20.20	-5.06	-41.04	-3.08	12.000
20	-37.29	0.00	-16.38	-42.38	0.00	-19.39	-5.09	0.00	-3.01	12.000

Note: "-" thrust indicate compression

Des. By: RJA Chk. By: GSC

DELTA
ENGINEERS, ARCHITECTS, & LAND SURVEYORS
860 Hooper Road, Endwell, NY 13760
www.deltaengineers.com
Phone: (607) 231-6600
Fax: (607) 231-6650

JOB	2016.059.009		
DESCRIPTION	28x8 under 8: 6A Case 2		
SHEET NO.	OF	SCALE	
CALCULATED BY	GSC	DATE	7/21/2016
CHECKED BY		DATE	

LRFR LOAD RATING - 6A Case 2

Node	Total Fac.	Factored DC+EH+EV			Factored LL			
Number	Nu (k/ft)	Nu_D (k/ft)	Mu_D (in-k/ft)	Vu_D (k/ft)	Nu_{LL} (k/ft)	$+Mu_{LL}$ (in-k/ft)	Vu_{LL} (k/ft)	Thick (in)
1	-25.33	-22.14	275.22	0.03	-3.20	58.13	0.01	10
2	-25.59	-22.37	270.08	0.80	-3.22	57.13	0.16	10
3	-25.97	-22.70	253.74	1.66	-3.27	53.84	0.34	10
4	-26.59	-23.24	225.56	2.58	-3.35	47.89	0.56	10
5	-27.38	-23.93	184.46	3.59	-3.45	38.84	0.80	10
6	-28.31	-24.72	129.08	4.72	-3.59	26.34	1.07	10
7	-29.35	-25.60	57.57	6.00	-3.75	10.14	1.35	10
8	-30.50	-26.56	-32.02	7.43	-3.94	-9.81	1.62	10.063
9	-31.74	-27.58	-141.89	9.02	-4.16	-33.43	1.88	10.063
10	-33.02	-28.61	-274.38	10.77	-4.41	-60.37	2.12	10.688
11	-34.34	-29.66	-431.26	12.63	-4.68	-90.31	2.32	12.375
12	-35.71	-30.77	-613.57	14.55	-4.94	-122.78	2.49	15.25
13	-37.14	-31.95	-822.16	16.58	-5.20	-157.24	2.62	19.25
14	-40.54	-35.06	-1058.99	1.91	-5.49	-193.09	0.06	27
15	-42.96	-37.39	-930.06	14.57	-5.56	-169.28	2.70	19.813
16	-42.37	-36.98	-787.22	16.06	-5.39	-142.67	2.98	15.438
17	-41.65	-36.44	-630.60	17.49	-5.21	-113.72	3.20	12.875
18	-41.41	-36.33	-461.04	17.83	-5.08	-83.05	3.20	12
19	-41.84	-36.77	-225.56	17.11	-5.06	-41.04	3.08	12
20	-42.38	-37.29	0.00	16.38	-5.09	0.00	3.01	12

note all shear values normalized to positive

Des. By: RJA Chk. By: GSC

DELTA
ENGINEERS, ARCHITECTS, & LAND SURVEYORS
860 Hooper Road, Endwell, NY 13760
www.deltaengineers.com
Phone: (607) 231-6600
Fax: (607) 231-6650

JOB	2016.059.009		
DESCRIPTION	28x8 under 8: 6A Case 2		
SHEET NO.	OF	SCALE	
CALCULATED BY	GSC	DATE	7/21/2016
CHECKED BY		DATE	

Node Number	thk (in)	d (in)	As'in (prov'd) (in^2 / ft)	As'out (prov'd) (in^2 / ft)
1	10.0	8.00	0.92	0.24
2	10.0	8.00	0.92	0.24
3	10.0	8.00	0.92	0.24
4	10.0	8.00	0.92	0.24
5	10.0	8.00	0.92	0.24
6	10.0	8.00	0.92	0.24
7	10.0	8.00	0.92	0.24
8	10.1	7.56	0.92	0.24
9	10.1	7.56	0.92	1.06
10	10.7	8.19	0.24	1.06
11	12.4	9.88	0.48	1.56
12	15.3	12.75	0.48	1.56
13	19.3	16.75	0.48	1.56
14	27.0	24.50	0.48	1.56
15	19.8	17.31	0.48	1.56
16	15.4	12.94	0.48	1.56
17	12.9	10.38	0.48	1.56
18	12.0	9.50	0.48	1.56
19	12.0	9.50	0.48	1.06
20	12.0	9.50	0.48	1.06

Des. By: RJA Chk. By: GSC

DELTA
ENGINEERS, ARCHITECTS, & LAND SURVEYORS
860 Hooper Road, Endwell, NY 13760
www.deltaengineers.com
Phone: (607) 231-6600
Fax: (607) 231-6650

JOB	2016.059.009		
DESCRIPTION	28x8 under 8: 6A Case 2		
SHEET NO.	OF	SCALE	
CALCULATED BY	GSC	DATE	7/21/2016
CHECKED BY		DATE	

LRFR LOAD RATING - 6A Case 2

Node Number	thk (in)	d (in)	As (prov'd) (in^2 / ft)	Total Fac. Nu (k/ft)	Phi Mn (in-k/ft)
1	10.0	8.00	0.92	-25.33	516.88
2	10.0	8.00	0.92	-25.59	517.84
3	10.0	8.00	0.92	-25.97	519.23
4	10.0	8.00	0.92	-26.59	521.48
5	10.0	8.00	0.92	-27.38	524.39
6	10.0	8.00	0.92	-28.31	527.75
7	10.0	8.00	0.92	-29.35	531.53
8	10.1	7.56	0.24	-30.50	245.90
9	10.1	7.56	1.06	-31.74	564.99
10	10.7	8.19	1.06	-33.02	619.35
11	12.4	9.88	1.56	-34.34	1003.03
12	15.3	12.75	1.56	-35.71	1329.06
13	19.3	16.75	1.56	-37.14	1785.63
14	27.0	24.50	1.56	-40.54	2693.52
15	19.8	17.31	1.56	-42.96	1893.69
16	15.4	12.94	1.56	-42.37	1387.02
17	12.9	10.38	1.56	-41.65	1089.78
18	12.0	9.50	1.56	-41.41	988.75
19	12.0	9.50	1.06	-41.84	762.52
20	12.0	9.50	1.06	-42.38	764.85

AASHTO 12.10.4.2.4a

g = 0.85 b f'c = 61

$$\phi M_n = \frac{1}{2}\left[g(\phi_f d)^2 - Nu(2\phi_f d - h) - \frac{(g\phi_f d - N_u - A_s F_y)^2}{g} \right]$$

Des. By: RJA Chk. By: GSC

DELTA
ENGINEERS, ARCHITECTS, & LAND SURVEYORS
860 Hooper Road, Endwell, NY 13760
www.deltaengineers.com
Phone: (607) 231-6600
Fax: (607) 231-6650

JOB	2016.059.009		
DESCRIPTION	28x8 under 8: 6A Case 2		
SHEET NO.	OF	SCALE	
CALCULATED BY	GSC	DATE	7/21/2016
CHECKED BY		DATE	

LRFR LOAD RATING - 6A Case 2

Node Number	thk (in)	d (in)	Phi Mn (in-k/ft)	Mu_D (in-k/ft)	$+Mu_{LL}$ (in-k/ft)	Inventory Rating	Operating Rating
1	10.0	8.00	516.88	275.22	58.13	4.16	5.39
2	10.0	8.00	517.84	270.08	57.13	4.34	5.62
3	10.0	8.00	519.23	253.74	53.84	4.93	6.39
4	10.0	8.00	521.48	225.56	47.89	6.18	8.01
5	10.0	8.00	524.39	184.46	38.84	8.75	11.34
6	10.0	8.00	527.75	129.08	26.34	15.14	19.62
7	10.0	8.00	531.53	57.57	10.14	46.72	60.57
8	10.1	7.56	245.90	-32.02	-9.81	21.80	28.26
9	10.1	7.56	564.99	-141.89	-33.43	12.66	16.41
10	10.7	8.19	619.35	-274.38	-60.37	5.71	7.41
11	12.4	9.88	1003.03	-431.26	-90.31	6.33	8.21
12	15.3	12.75	1329.06	-613.57	-122.78	5.83	7.55
13	19.3	16.75	1785.63	-822.16	-157.24	6.13	7.94
14	27.0	24.50	2693.52	-1058.99	-193.09	8.47	10.97
15	19.8	17.31	1893.69	-930.06	-169.28	5.69	7.38
16	15.4	12.94	1387.02	-787.22	-142.67	4.20	5.45
17	12.9	10.38	1089.78	-630.60	-113.72	4.04	5.23
18	12.0	9.50	988.75	-461.04	-83.05	6.35	8.24
19	12.0	9.50	762.52	-225.56	-41.04	13.08	16.96
20	12.0	9.50	764.85	0.00	0.00	N/A	N/A
					Controlling	**4.04**	**5.23**

g = 0.85 b f'c = 61

$$\phi M_n = \frac{1}{2}\left[g(\phi_f d)^2 - Nu(2\phi_f d - h) - \frac{(g\phi_f d - N_u - A_s F_y)^2}{g} \right]$$

Des. By: RJA Chk. By: GSC

DELTA ENGINEERS
184 Court Street
BINGHAMTON, NEW YORK 13901
(607) 231-6600 Fax 231-6650

JOB	2016.059.009		
DESCRIPTION	28x8 under 8: 6A Case 2		
SHEET NO	OF	SCALE	
CALCULATED BY	GSC	DATE	7/21/2016
CHECKED BY		DATE	

LRFR LOAD RATING - 6A Case 2

Elmt Nmbr	thk (in)	d (in)	As (prov'd) (in^2 / ft)	Vtotal (kip/ft)	Vdl only (kip/ft)	Vll only (kip/ft)	Vn=Vc+Vs ϕVn (kip/ft)	1.75 INV	1.35 OPR
1	10.0	8.000	0.92	0.05	0.03	0.01	12.84	1123	1456
2	10.0	8.000	0.92	0.96	0.80	0.16	12.85	75.67	98.09
3	10.0	8.000	0.92	2.00	1.66	0.34	12.87	32.62	42.28
4	10.0	8.000	0.92	3.14	2.58	0.56	12.90	18.47	23.94
5	10.0	8.000	0.92	4.39	3.59	0.80	12.94	11.64	15.09
6	10.0	8.000	0.92	5.79	4.72	1.07	13.87	8.561	11.1
7	10.0	8.000	0.92	7.34	6.00	1.35	31.32	18.82	24.39
8	10.1	7.563	0.24	9.05	7.43	1.62	29.61	13.68	17.73
9	10.1	7.563	1.06	10.91	9.02	1.88	21.34	6.546	8.486
10	10.7	8.188	1.06	12.89	10.77	2.12	15.41	2.191	2.84
11	12.4	9.875	1.56	14.95	12.63	2.32	18.31	2.446	3.17
12	15.3	12.750	1.56	17.04	14.55	2.49	20.38	2.339	3.032
13	19.3	16.750	1.56	19.20	16.58	2.62	24.14	2.886	3.741
14	27.0	24.500	1.56	1.96	1.91	0.06	30.24	481.9	624.7
15	19.8	17.313	1.56	17.27	14.57	2.70	24.26	3.587	4.65
16	15.4	12.938	1.56	19.03	16.06	2.98	20.86	1.612	2.089
17	12.9	10.375	1.56	20.68	17.49	3.20	47.64	9.435	12.23
18	12.0	9.500	1.56	21.03	17.83	3.20	47.82	9.36	12.13
19	12.0	9.500	1.06	20.20	17.11	3.08	57.08	12.97	16.81
20	12.0	9.500	1.06	19.39	16.38	3.01	64.16	15.88	20.58
							controling:	**1.612**	**2.089**

$$F_d = 0.8 + \frac{1.6}{d} \le 1.3$$

$$F_n = 1 + \frac{N_u}{24 * thk}$$

$$\rho = \frac{A_s}{\phi bd} \le 0.02$$

$$\phi V_n = \phi 0.0316 b d F_{vp} \sqrt{f'c}\left(1.1 + 63\rho\right)\left(\frac{F_d F_n}{F_c}\right)$$

$$F_c = 1 \pm \left(\frac{d}{2 * rad}\right)$$

Shear Resistance With Stirrups **AASHTO 12.10.4.2.5**

Des. By: RJA Chk. By: GSC

DELTA ENGINEERS
184 Court Street
BINGHAMTON, NEW YORK 13901
(607) 231-6600 Fax 231-6650

JOB	2016.059.009		
DESCRIPTION	28x8 under 8: 6A Case 2		
SHEET NO.	OF	SCALE	0
CALCULATED BY	GSC	DATE	7/21/2016
CHECKED BY		DATE	

Arch Design

Positive Moment Design (cont.)

Shear Resistance With Radial Stirrups **AASHTO 12.10.4.2.6**

Element Number	thk (in)	d (in)	Sv MAX (in)	Sv Act (in)	Avr (in^2 / ft)	Sv MAX (in)	Sv Act (in)	Avs (in^2 / ft)	ϕVs (k/ft)
1	10.0	8.13	5.48	0.00	0.00	5.48	0.00	0.00	0
2	10.0	8.13	5.48	0.00	0.00	5.48	0.00	0.00	0
3	10.0	8.13	5.48	0.00	0.00	5.48	0.00	0.00	0
4	10.0	8.13	5.48	0.00	0.00	5.48	0.00	0.00	0
5	10.0	8.13	5.48	0.00	0.00	5.48	0.00	0.00	0
6	10.0	8.13	5.48	0.00	0.00	5.48	0.00	0.00	0
7	10.0	8.13	5.48	0.00	0.00	5.48	0.00	0.00	0
8	10.1	7.69	5.19	0.00	0.00	5.19	0.00	0.00	0
9	10.1	7.69	5.19	0.00	0.00	5.19	0.00	0.00	0
10	10.7	8.31	5.61	0.00	0.00	5.61	0.00	0.00	0
11	12.4	10.00	6.75	0.00	0.00	6.75	0.00	0.00	0
12	15.3	12.88	8.69	0.00	0.00	8.69	0.00	0.00	0
13	19.3	16.88	11.39	0.00	0.00	11.39	0.00	0.00	0
14	27.0	24.63	16.62	0.00	0.00	16.62	0.00	0.00	0
15	19.8	17.44	11.77	0.00	0.00	11.77	0.00	0.00	0
16	15.4	13.06	8.82	0.00	0.00	8.82	0.00	0.00	0
17	12.9	10.50	7.09	4.50	0.01	7.09	4.50	0.04	28.6
18	12.0	9.63	6.50	4.50	0.01	6.50	4.50	0.06	26.49
19	12.0	9.63	6.50	4.50	0.00	6.50	4.50	0.04	27.1
20	12.0	9.63	6.50	4.50	0.00	6.50	4.50	0.03	26.97

For Radial Tension

$$A_{vr} = \frac{1.1 s_v \left(M_u - 0.45 N_u \phi_r d\right)}{f_y r_s \phi_r d}$$

$$s_v \le 0.75 \phi_r d$$

For Shear

$$A_{vs} = \frac{1.1 s_v}{f_y \phi_v d}\left(V_u F_c - V_c\right) + A_{vr}$$

$$V_c = \frac{4V_r}{\frac{M_{nu}}{V_u d} + 1} \le 0.0633 \phi_v b d \sqrt{f'_c}$$

Mnu=Mu-Nu(4h-d)/8

rearanging Avs equation above and

taking Fc =1.0, Vs = (Avs-Avr)*Fys*ϕv*d/(1.1*Sv) (<8*√F'c*Bw*d)

(#3@4.5")

As provided = 0.293 sq.in. / L.F.

Des. By: RJA Chk. By: GSC

DELTA
ENGINEERS, ARCHITECTS, & LAND SURVEYORS
860 Hooper Road, Endwell, NY 13760
www.deltaengineers.com
Phone: (607) 231-6600
Fax: (607) 231-6650

JOB	2016.059.009		
DESCIPTION	28x8u8.6		
SHEET NO.	OF	SCALE	
CALCULATED BY		DATE	
CHECKED BY		DATE	

span 28 ft

leg thickness 12 inches

traffic parallel with main reinforcement

3A TRUCK

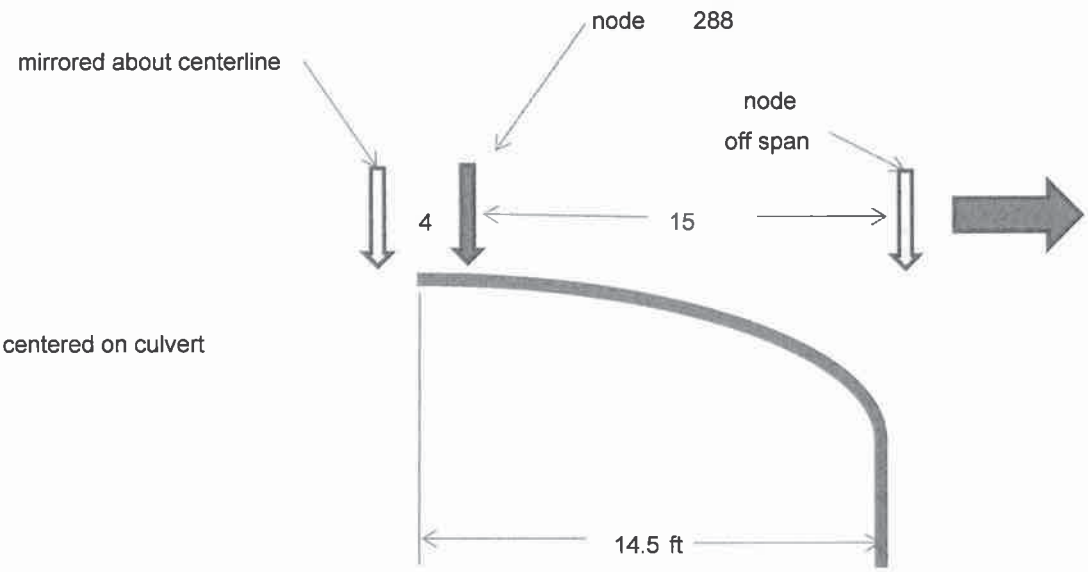

case 1

rear axle group centered on culvert

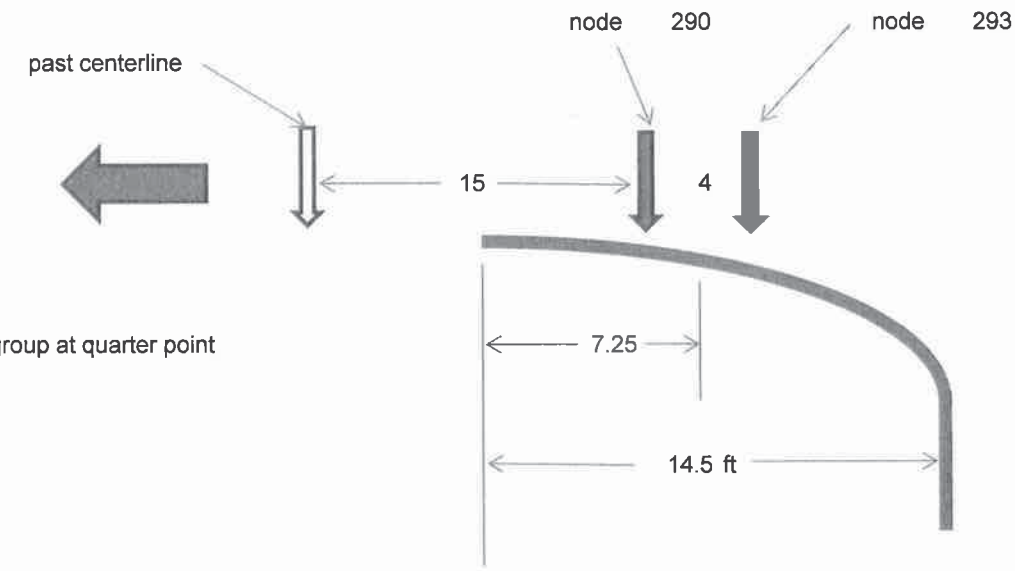

case 2

rear axle group at quarter point

Des. By: RJA Chk. By: GSC

DELTA
ENGINEERS, ARCHITECTS, & LAND SURVEYORS
860 Hooper Road, Endwell, NY 13760
www.deltaengineers.com
Phone: (607) 231-6600
Fax: (607) 231-6650

JOB 2016.059.009
DESCIPTION 28x8u8.6
SHEET NO. ____ OF ____ SCALE ____
CALCULATED BY ____ DATE ____
CHECKED BY ____ DATE ____

3A truck 8.6 ft earth cover (controls)

Load Case	Description	
1	3A	truck at center
2	3A	truck at quarter point

Boundary conditions

Case 1			Case 2		
node	step	force	node	step	force
288	12	-28.50	293	12	-28.50
288	13	-28.50	293	13	-28.50
288	14	-28.50	293	14	-28.50
288	15	-28.50	293	15	-28.50
291	12	0.00	290	12	-28.50
291	13	0.00	290	13	-28.50
291	14	0.00	290	14	-28.50
291	12	0.00	290	12	-28.50
294	13	0.00	294	13	0.00
294	14	0.00	294	14	0.00
294	15	0.00	294	15	0.00
294	15	0.00	294	15	0.00

capacity demand ratio

	Case 1		Case 2		
failure mode	node	ratio	node	ratio	
steel yeilding	17	0.751	17	0.780	
concrete crushing	17	0.765	17	0.783	
shear failure	17	1.004	17	1.035	Controls
radial tension failure	1	0.115	1	0.113	

Des. By: RJA Chk. By: GSC

```
*** WELCOME TO CANDE-2013(version 3/1/2013) ***

USER TITLE: 28x8_u8.6_3A_c1

* * * BOUNDARY CONDITIONS * * *
 (FORCES = LBS; DISPLACEMENTS = INCHES; ROTATIONS = DEGREES)

  BOUNDARY      LOAD      X-FORCE     OR      Y-FORCE     OR      X-Y ROTATION
BEAM ROTATIONAL
     NODE       STEP      X-DISPLACEMENT      Y-DISPLACEMENT
BOUNDARY CONDITIONS

      288        12    F =   0.0000E+00    F =  -0.2850E+02      0.0000E+00
     F
      288        13    F =   0.0000E+00    F =  -0.2850E+02      0.0000E+00
     F
      288        14    F =   0.0000E+00    F =  -0.2850E+02      0.0000E+00
     F
      288        15    F =   0.0000E+00    F =  -0.2850E+02      0.0000E+00
     F
      291        12    F =   0.0000E+00    F =   0.0000E+00      0.0000E+00
     F
      291        13    F =   0.0000E+00    F =   0.0000E+00      0.0000E+00
     F
      291        14    F =   0.0000E+00    F =   0.0000E+00      0.0000E+00
     F
      291        12    F =   0.0000E+00    F =   0.0000E+00      0.0000E+00
     F
      294        13    F =   0.0000E+00    F =   0.0000E+00      0.0000E+00
     F
      294        14    F =   0.0000E+00    F =   0.0000E+00      0.0000E+00
     F
      294        15    F =   0.0000E+00    F =   0.0000E+00      0.0000E+00
     F
      294        15    F =   0.0000E+00    F =   0.0000E+00      0.0000E+00
     F
      287        15    F =   0.0000E+00    F =   0.0000E+00      0.0000E+00
     F
      288        15    F =   0.0000E+00    F =   0.0000E+00      0.0000E+00
     F
      289        15    F =   0.0000E+00    F =   0.0000E+00      0.0000E+00
     F
      290        15    F =   0.0000E+00    F =   0.0000E+00      0.0000E+00
     F
      291        15    F =   0.0000E+00    F =   0.0000E+00      0.0000E+00
     F
      292        15    F =   0.0000E+00    F =   0.0000E+00      0.0000E+00
     F
      293        15    F =   0.0000E+00    F =   0.0000E+00      0.0000E+00
     F
      294        15    F =   0.0000E+00    F =   0.0000E+00      0.0000E+00
     F
      295        15    F =   0.0000E+00    F =   0.0000E+00      0.0000E+00
     F
      296        15    F =   0.0000E+00    F =   0.0000E+00      0.0000E+00
     F

 LRFD TOTAL LOAD FACTORS PER LOAD STEP

              LOAD STEP       LOAD FACTOR       USER COMMENT

                     1           1.313        Factor for load step #1
```

2	0.857	Factor for load step #2
3	0.857	Factor for load step #3
4	0.857	Factor for load step #4
5	1.365	Factor for load step #5
6	1.365	Factor for load step #6
7	1.365	Factor for load step #7
8	1.365	Factor for load step #8
9	1.365	Factor for load step #9
10	1.365	Factor for load step #10
11	1.365	Factor for load step #11
12	1.350	Factor for load step #12
13	1.350	Factor for load step #13
14	1.350	Factor for load step #14
15	1.350	Factor for load step #15

+ +

FINITE ELEMENT OUTPUT FOR LOAD STEP 15

+ +

CONCRETE, FACTORED-EVALUATION FOR GROUP 1, LOAD-STEP 15

STRUCTURAL RESPONSES OF CONCRETE-GROUP 1, LOAD-STEP 15
COORDINATES, DISPLACEMENTS AND CRACK DEPTHS ARE INCHES
Y-BAR IS "NEUTRAL AXIS" LOCATION FROM INTERIOR, INCHES
PRESSURES ARE LB/IN**2
MOMENTS ARE IN-LB/IN
THRUST AND SHEAR ARE LB/IN

LOCAL NODE	X-COORD. Y-COORD.	X-DISP. Y-DISP.	N-PRES. S-PRES.	MOMENT THRUST	Y-BAR CRACK DEPTH
1	0.00 101.00	0.00000E+00 -0.22332E+01	-0.10167E+02 -0.22232E+00	0.26117E+05 -0.19364E+04	0.74705E+01 0.70198E+01
2	13.43 100.76	-0.87450E-03 -0.22098E+01	-0.10361E+02 -0.15788E+01	0.25574E+05 -0.19608E+04	0.73190E+01 0.69918E+01
3	26.84 100.08	0.13412E-02 -0.21407E+01	-0.10556E+02 -0.29354E+01	0.23877E+05 -0.19959E+04	0.73190E+01 0.69599E+01
4	40.22 98.95	0.93833E-02 -0.20292E+01	-0.11002E+02 -0.40684E+01	0.21006E+05 -0.20510E+04	0.74181E+01 0.68880E+01
5	53.56 97.38	0.25430E-01 -0.18810E+01	-0.11604E+02 -0.45423E+01	0.16906E+05 -0.21203E+04	0.74181E+01 0.67416E+01
6	66.84	0.50756E-01	-0.12501E+02	0.11498E+05	0.74181E+01

	95.38	-0.17044E+01	-0.48411E+01	-0.21985E+04	0.63444E+01
7	80.05	0.85102E-01	-0.13481E+02	0.46598E+04	0.50615E+01
	92.93	-0.15145E+01	-0.49819E+01	-0.22835E+04	0.19748E+00
8	93.16	0.12629E+00	-0.14645E+02	-0.37501E+04	0.20283E+01
	90.05	-0.13227E+01	-0.50984E+01	-0.23745E+04	0.69740E+01
9	106.18	0.17059E+00	-0.15893E+02	-0.13901E+05	0.25648E+01
	86.73	-0.11419E+01	-0.47703E+01	-0.24689E+04	0.66416E+01
10	119.08	0.21285E+00	-0.16787E+02	-0.25975E+05	0.28493E+01
	82.99	-0.99079E+00	-0.43365E+01	-0.25633E+04	0.73627E+01
11	131.84	0.24966E+00	-0.17321E+02	-0.40104E+05	0.34229E+01
	78.82	-0.87337E+00	-0.40067E+01	-0.26585E+04	0.82992E+01
12	144.47	0.28019E+00	-0.17636E+02	-0.56360E+05	0.40506E+01
	74.23	-0.78572E+00	-0.38063E+01	-0.27567E+04	0.10466E+02
13	156.93	0.30515E+00	-0.18459E+02	-0.74804E+05	0.44678E+01
	69.23	-0.72064E+00	-0.35758E+01	-0.28596E+04	0.13532E+02
14	169.22	0.32587E+00	-0.22678E+02	-0.95596E+05	0.55838E+01
	63.82	-0.67102E+00	-0.16841E+02	-0.31135E+04	0.19554E+02
15	171.39	0.35487E+00	-0.10469E+02	-0.83861E+05	0.45538E+01
	54.75	-0.66328E+00	-0.44967E+01	-0.32971E+04	0.13920E+02
16	172.91	0.37615E+00	-0.10576E+02	-0.70897E+05	0.42445E+01
	45.55	-0.65888E+00	-0.44116E+01	-0.32552E+04	0.10639E+02
17	173.78	0.38447E+00	-0.11413E+02	-0.56732E+05	0.36636E+01
	36.26	-0.65708E+00	-0.46627E+01	-0.32025E+04	0.87198E+01
18	174.00	0.37599E+00	-0.12305E+02	-0.41459E+05	0.34579E+01
	26.94	-0.65616E+00	-0.45962E+01	-0.31874E+04	0.79533E+01
19	174.00	0.33539E+00	-0.47400E+01	-0.20300E+05	0.30043E+01
	13.47	-0.65448E+00	-0.21539E+01	-0.32225E+04	0.78531E+01
20	174.00	0.27916E+00	0.28255E+01	0.48885E-10	0.60775E+01
	0.00	-0.65346E+00	0.28845E+00	-0.32655E+04	0.00000E+00

SHEAR FORCE DIAGNOSTCS FOR CONCRETE-GROUP 1, LOAD STEP 15
-- V-factor is coefficient of sqrt(PFPC) equal to capacity.
-- Shear depth "d" is negative if measured from outer wall.
-- Stirrup load is excess shear force above capacity.

NODE	EQUIVALENT V-factor	SHEAR CAPACITY lbs/inch	APPLIED SHEAR lbs/inch	APPLIED/ CAPACITY ratio	SHEAR DEPTH-d inches	STIRRUP LOAD lbs/inch
1	1.83	1179.16	-2.58	0.002	8.00	0.00
2	1.83	1180.47	83.38	0.071	8.00	0.00
3	1.83	1182.36	170.08	0.144	8.00	0.00
4	1.84	1185.32	259.55	0.219	8.00	0.00
5	1.84	1189.05	353.97	0.298	8.00	0.00
6	2.08	1344.55	455.91	0.339	8.00	0.00
7	4.50	2900.32	567.70	0.196	8.00	0.00
8	4.50	2741.89	691.01	0.252	-7.56	0.00
9	3.12	1900.97	827.43	0.435	-7.56	0.00
10	2.11	1390.16	975.53	0.702	-8.19	0.00

11	2.11	1683.04	1131.24	0.672	-9.88	0.00
12	1.82	1874.78	1291.89	0.689	-12.75	0.00
13	1.64	2216.33	1460.74	0.659	-16.75	0.00
14	1.41	2787.18	144.97	0.052	-24.50	0.00
15	1.60	2232.03	-1324.11	0.593	-17.31	0.00
16	1.84	1915.64	-1454.45	0.759	-12.94	0.00
17	2.09	1746.45	-1578.24	0.904	-10.38	0.00
18	2.56	1958.59	-1604.22	0.819	-9.50	0.00
19	3.60	2754.67	-1538.96	0.559	-9.50	0.00
20	4.50	3625.40	-1475.11	0.407	10.00	0.00

ASSESSMENT SUMMARY CONCRETE-GROUP 1, LOAD-STEP 15

LRFD SUMMARY EVALUATION FOR GROUP 1, LOAD STEP 15

DESIGN-CRITERION	CONTROL NODE	FACTORED DEMAND	FACTORED CAPACITY	RATIO VALUE
STEEL YIELDING (psi)	17	42804.5	57000.0	0.751
CONCRETE CRUSHING (psi)	17	3729.8	4875.0	0.765
SHEAR FAILURE (lbs/in)	17	1578.2	1571.8	1.004
RADIAL-TENSION FAIL (psi)	1	8.0	69.6	0.115

LRFD SERVICE-LOAD PERFORMANCE MEASURES FOR GROUP 1, LOAD STEP 15

NODE NUMBER FOR MAXIMUM CRACK WIDTH 17

MAXIMUM CRACK WIDTH AT SERVICE LOAD (inches) 0.00720

LRFD RATIO: MAX-CRACK-WIDTH / ALLOWABLE 0.72

SPAN LENGTH FOR AUXILIARY EQUATIONS (inches)..... 348.00

* * * * NORMAL EXIT FROM CANDE * * * *

*** WELCOME TO CANDE-2013(version 3/1/2013) ***

USER TITLE: 28x8_u8.6_3A_c2

* * * BOUNDARY CONDITIONS * * *
(FORCES = LBS; DISPLACEMENTS = INCHES; ROTATIONS = DEGREES)

BOUNDARY NODE	LOAD STEP	X-FORCE OR X-DISPLACEMENT	Y-FORCE OR Y-DISPLACEMENT	X-Y ROTATION BEAM ROTATIONAL BOUNDARY CONDITIONS
293	12	F = 0.0000E+00	F = -0.2850E+02	0.0000E+00 F
293	13	F = 0.0000E+00	F = -0.2850E+02	0.0000E+00 F
293	14	F = 0.0000E+00	F = -0.2850E+02	0.0000E+00 F
293	15	F = 0.0000E+00	F = -0.2850E+02	0.0000E+00 F
290	12	F = 0.0000E+00	F = -0.2850E+02	0.0000E+00 F
290	13	F = 0.0000E+00	F = -0.2850E+02	0.0000E+00 F
290	14	F = 0.0000E+00	F = -0.2850E+02	0.0000E+00 F
290	12	F = 0.0000E+00	F = -0.2850E+02	0.0000E+00 F
294	13	F = 0.0000E+00	F = 0.0000E+00	0.0000E+00 F
294	14	F = 0.0000E+00	F = 0.0000E+00	0.0000E+00 F
294	15	F = 0.0000E+00	F = 0.0000E+00	0.0000E+00 F
294	15	F = 0.0000E+00	F = 0.0000E+00	0.0000E+00 F
287	15	F = 0.0000E+00	F = 0.0000E+00	0.0000E+00 F
288	15	F = 0.0000E+00	F = 0.0000E+00	0.0000E+00 F
289	15	F = 0.0000E+00	F = 0.0000E+00	0.0000E+00 F
290	15	F = 0.0000E+00	F = 0.0000E+00	0.0000E+00 F
291	15	F = 0.0000E+00	F = 0.0000E+00	0.0000E+00 F
292	15	F = 0.0000E+00	F = 0.0000E+00	0.0000E+00 F
293	15	F = 0.0000E+00	F = 0.0000E+00	0.0000E+00 F
294	15	F = 0.0000E+00	F = 0.0000E+00	0.0000E+00 F
295	15	F = 0.0000E+00	F = 0.0000E+00	0.0000E+00 F
296	15	F = 0.0000E+00	F = 0.0000E+00	0.0000E+00 F

LRFD TOTAL LOAD FACTORS PER LOAD STEP

LOAD STEP	LOAD FACTOR	USER COMMENT
1	1.313	Factor for load step #1

2	0.857	Factor for load step #2
3	0.857	Factor for load step #3
4	0.857	Factor for load step #4
5	1.365	Factor for load step #5
6	1.365	Factor for load step #6
7	1.365	Factor for load step #7
8	1.365	Factor for load step #8
9	1.365	Factor for load step #9
10	1.365	Factor for load step #10
11	1.365	Factor for load step #11
12	1.350	Factor for load step #12
13	1.350	Factor for load step #13
14	1.350	Factor for load step #14
15	1.350	Factor for load step #15

```
+ + + + + + + + + + + + + + + + + + + + + + + + + + + + + + + + + + + + + + + + + + + +

 FINITE ELEMENT OUTPUT FOR LOAD STEP 15

+ + + + + + + + + + + + + + + + + + + + + + + + + + + + + + + + + + + + + + + + + + + +
 CONCRETE, FACTORED-EVALUATION FOR GROUP  1, LOAD-STEP 15

 STRUCTURAL RESPONSES OF CONCRETE-GROUP  1, LOAD-STEP 15
 COORDINATES, DISPLACEMENTS AND CRACK DEPTHS ARE INCHES
 Y-BAR IS "NEUTRAL AXIS" LOCATION FROM INTERIOR, INCHES
 PRESSURES ARE LB/IN**2
 MOMENTS ARE IN-LB/IN
 THRUST AND SHEAR ARE  LB/IN
```

LOCAL NODE	X-COORD. Y-COORD.	X-DISP. Y-DISP.	N-PRES. S-PRES.	MOMENT THRUST	Y-BAR CRACK DEPTH
1	0.00	0.00000E+00	-0.92353E+01	0.25862E+05	0.73190E+01
	101.00	-0.22829E+01	-0.13576E+00	-0.20271E+04	0.69825E+01
2	13.43	-0.93568E-03	-0.98077E+01	0.25403E+05	0.73190E+01
	100.76	-0.22597E+01	-0.12783E+01	-0.20470E+04	0.69722E+01
3	26.84	0.11979E-02	-0.10380E+02	0.23927E+05	0.73190E+01
	100.08	-0.21911E+01	-0.24208E+01	-0.20762E+04	0.69436E+01
4	40.22	0.91572E-02	-0.11241E+02	0.21345E+05	0.74181E+01
	98.95	-0.20799E+01	-0.34851E+01	-0.21233E+04	0.68797E+01
5	53.56	0.25186E-01	-0.12225E+02	0.17523E+05	0.74181E+01
	97.38	-0.19315E+01	-0.40140E+01	-0.21845E+04	0.67473E+01
6	66.84	0.50669E-01	-0.13417E+02	0.12310E+05	0.74181E+01
	95.38	-0.17537E+01	-0.44579E+01	-0.22561E+04	0.63940E+01

7	80.05	0.85412E-01	-0.14578E+02	0.55257E+04	0.50615E+01
	92.93	-0.15615E+01	-0.47927E+01	-0.23372E+04	0.91663E+00
8	93.16	0.12721E+00	-0.15787E+02	-0.30036E+04	0.20283E+01
	90.05	-0.13667E+01	-0.51212E+01	-0.24274E+04	0.67236E+01
9	106.18	0.17252E+00	-0.16979E+02	-0.13457E+05	0.25648E+01
	86.73	-0.11819E+01	-0.50199E+01	-0.25243E+04	0.65951E+01
10	119.08	0.21617E+00	-0.17840E+02	-0.26004E+05	0.28493E+01
	82.99	-0.10259E+01	-0.47688E+01	-0.26244E+04	0.73502E+01
11	131.84	0.25452E+00	-0.18305E+02	-0.40769E+05	0.34229E+01
	78.82	-0.90361E+00	-0.45726E+01	-0.27279E+04	0.82946E+01
12	144.47	0.28660E+00	-0.18483E+02	-0.57808E+05	0.40506E+01
	74.23	-0.81161E+00	-0.44118E+01	-0.28358E+04	0.10466E+02
13	156.93	0.31301E+00	-0.19131E+02	-0.77152E+05	0.44678E+01
	69.23	-0.74277E+00	-0.42280E+01	-0.29494E+04	0.13537E+02
14	169.22	0.33512E+00	-0.23244E+02	-0.98925E+05	0.55838E+01
	63.82	-0.68991E+00	-0.18079E+02	-0.32268E+04	0.19558E+02
15	171.39	0.36624E+00	-0.10404E+02	-0.86877E+05	0.45538E+01
	54.75	-0.68162E+00	-0.45713E+01	-0.34273E+04	0.13921E+02
16	172.91	0.38938E+00	-0.10596E+02	-0.73509E+05	0.42445E+01
	45.55	-0.67687E+00	-0.45452E+01	-0.33834E+04	0.10635E+02
17	173.78	0.39908E+00	-0.11560E+02	-0.58857E+05	0.36636E+01
	36.26	-0.67490E+00	-0.47955E+01	-0.33282E+04	0.87170E+01
18	174.00	0.39132E+00	-0.12635E+02	-0.43027E+05	0.34579E+01
	26.94	-0.67393E+00	-0.47234E+01	-0.33119E+04	0.79506E+01
19	174.00	0.35066E+00	-0.48429E+01	-0.21074E+05	0.30043E+01
	13.47	-0.67217E+00	-0.22632E+01	-0.33477E+04	0.78554E+01
20	174.00	0.29376E+00	0.29489E+01	0.11937E-09	0.60775E+01
	0.00	-0.67112E+00	0.19700E+00	-0.33922E+04	0.00000E+00

SHEAR FORCE DIAGNOSTCS FOR CONCRETE-GROUP 1, LOAD STEP 15
-- V-factor is coefficient of sqrt(PFPC) equal to capacity.
-- Shear depth "d" is negative if measured from outer wall.
-- Stirrup load is excess shear force above capacity.

NODE	EQUIVALENT V-factor	SHEAR CAPACITY lbs/inch	APPLIED SHEAR lbs/inch	APPLIED/ CAPACITY ratio	SHEAR DEPTH-d inches	STIRRUP LOAD lbs/inch
1	1.84	1184.04	-3.64	0.003	8.00	0.00
2	1.84	1185.11	72.03	0.061	8.00	0.00
3	1.84	1186.67	151.07	0.127	8.00	0.00
4	1.84	1189.20	238.45	0.201	8.00	0.00
5	1.85	1192.50	336.39	0.282	8.00	0.00
6	1.95	1254.77	446.63	0.356	8.00	0.00
7	4.38	2826.65	570.10	0.202	8.00	0.00
8	4.50	2741.89	706.71	0.258	-7.56	0.00
9	3.29	2006.84	856.30	0.427	-7.56	0.00
10	2.18	1439.12	1016.83	0.707	-8.19	0.00
11	2.12	1687.30	1184.07	0.702	-9.88	0.00

12	1.83	1879.25	1354.55	0.721	-12.75	0.00
13	1.66	2247.61	1530.81	0.681	-16.75	0.00
14	1.41	2792.71	164.71	0.059	-24.50	0.00
15	1.60	2238.80	-1362.62	0.609	-17.31	0.00
16	1.84	1922.84	-1502.28	0.781	-12.94	0.00
17	2.10	1754.03	-1634.23	0.932	-10.38	0.00
18	2.57	1966.61	-1663.53	0.846	-9.50	0.00
19	3.61	2767.11	-1597.13	0.577	-9.50	0.00
20	4.50	3625.40	-1531.90	0.423	10.00	0.00

ASSESSMENT SUMMARY CONCRETE-GROUP 1, LOAD-STEP 15

LRFD SUMMARY EVALUATION FOR GROUP 1, LOAD STEP 15

DESIGN-CRITERION	CONTROL NODE	FACTORED DEMAND	FACTORED CAPACITY	RATIO VALUE
STEEL YIELDING (psi)	17	44436.6	57000.0	0.780
CONCRETE CRUSHING (psi)	17	3817.1	4875.0	0.783
SHEAR FAILURE (lbs/in)	17	1634.2	1578.6	1.035
RADIAL-TENSION FAIL (psi)	1	7.9	69.6	0.113

LRFD SERVICE-LOAD PERFORMANCE MEASURES FOR GROUP 1, LOAD STEP 15

NODE NUMBER FOR MAXIMUM CRACK WIDTH 17

MAXIMUM CRACK WIDTH AT SERVICE LOAD (inches) 0.00789

LRFD RATIO: MAX-CRACK-WIDTH / ALLOWABLE 0.79

SPAN LENGTH FOR AUXILIARY EQUATIONS (inches)..... 348.00

* * * * NORMAL EXIT FROM CANDE * * * *

DELTA
ENGINEERS, ARCHITECTS, & LAND SURVEYORS
860 Hooper Road, Endwell, NY 13760
www.deltaengineers.com
Phone: (607) 231-6600
Fax: (607) 231-6650

JOB	2016.059.009		
DESCRIPTION	28x8 under 8: 3A Case 2		
SHEET NO.	OF	SCALE	
CALCULATED BY		DATE	
CHECKED BY		DATE	

LRFR LOAD RATING - 3A Case 2

Technical Data & Load Factors

Culvert Span (S) =	29.00 ft.	(C to C)	
Crown Radius (Rad) =	33.83 ft.		
Bar Cover			
Outside Face (Cov_{out}) =	2.00 in		
Inside Face (Cov_{in}) =	1.50 in		
Design Section Length (b) =	12 in		
Compressive Strength (f_c) =	6.5 ksi		
Yield Strength (f_y) =	60 ksi		
Stirrup Yield Strength (f_{ystir}) =	60 ksi		
Circumferential Reinforcement Spa. (spa.) =	5.00 in		
Circumferential Reinforcement Provided (n) =	1	(n=1 for 1 layer, n=2 for multiple layers)	AASHTO
Reinforcement Type (Type) =	3	AASHTO Table	12.10.4.2.4d

1 - smooth wire or plain bar — 12.10.4.4d-1

2 - WWF (8" max spa. Smooth)

3 - WWF (deformed) or bar (deformed)

Resistance Factors:

ϕf - Flexure =	1.00	AASHTO Table 12.5.5-1
ϕr - Radial Tension =	0.90	
ϕv - Diag Tension =	0.90	
Radial Tension Process (F_{rp}) =	1.00	AASHTO 12.10.4.2.3
Diag Tension Process (F_{vp}) =	1.00	

Load Factors:

	IR	OR	
LL Factor	1.75	1.35	load modification factors already applied to magnitude
γ_pDC (component)	1.31	(1.25*1.05)	
γ_pEH (hor. At rest earth pressure)	0.86	(0.9/1.05)	
γ_pEV	1.37	(1.3*1.05)	
State Trucks		1.45	(ADTT = 280)

Des. By: RJA Chk. By: GSC

DELTA
ENGINEERS, ARCHITECTS, & LAND SURVEYORS
860 Hooper Road, Endwell, NY 13760
www.deltaengineers.com
Phone: (607) 231-6600
Fax: (607) 231-6650

JOB	2016.059.009
DESCRIPTION	28x8 under 8: 3A Case 2
SHEET NO.	OF
CALCULATED BY	DATE
CHECKED BY	DATE

Design Force Summary

	Factored DC+EV+EH			Max Factored Total Load			Max Factored LL			
Node Number	Factored Thrust Nu (k/ft)	Factored Moment Mu (k-in/ft)	Factored Shear Vu (k/ft)	Factored Thrust Nu (k/ft)	Factored Moment Mu (k-in/ft)	Factored Shear Vu (k/ft)	Factored Thrust Nu (k/ft)	Factored Moment Mu (k-in/ft)	Factored Shear Vu (k/ft)	Thk at node (in)
1	-22.14	275.22	-0.03	-24.33	310.34	-0.04	-2.19	35.12	-0.01	10.000
2	-22.37	270.08	0.80	-24.56	304.84	0.86	-2.20	34.75	0.06	10.000
3	-22.70	253.74	1.66	-24.91	287.12	1.81	-2.21	33.38	0.16	10.000
4	-23.24	225.56	2.58	-25.48	256.14	2.86	-2.24	30.58	0.28	10.000
5	-23.93	184.46	3.59	-26.21	210.28	4.04	-2.28	25.81	0.44	10.000
6	-24.72	129.08	4.72	-27.07	147.72	5.36	-2.35	18.64	0.64	10.000
7	-25.60	57.57	6.00	-28.05	66.31	6.84	-2.45	8.74	0.84	10.000
8	-26.56	-32.02	7.43	-29.13	-36.04	8.48	-2.57	-4.02	1.05	10.063
9	-27.58	-141.89	9.02	-30.29	-161.48	10.28	-2.71	-19.60	1.25	10.063
10	-28.61	-274.38	10.77	-31.49	-312.05	12.20	-2.88	-37.67	1.43	10.688
11	-29.66	-431.26	12.63	-32.73	-489.23	14.21	-3.07	-57.97	1.58	12.375
12	-30.77	-613.57	14.55	-34.03	-693.70	16.25	-3.26	-80.12	1.70	15.250
13	-31.95	-822.16	16.58	-35.39	-925.82	18.37	-3.45	-103.67	1.79	19.250
14	-35.06	-1058.99	1.91	-38.72	-1187.10	1.98	-3.66	-128.11	0.07	27.000
15	-37.39	-930.06	-14.57	-41.13	-1042.52	-16.35	-3.73	-112.46	-1.78	19.813
16	-36.98	-787.22	-16.06	-40.60	-882.11	-18.03	-3.62	-94.88	-1.97	15.438
17	-36.44	-630.60	-17.49	-39.94	-706.28	-19.61	-3.50	-75.68	-2.12	12.875
18	-36.33	-461.04	-17.83	-39.74	-516.32	-19.96	-3.41	-55.28	-2.13	12.000
19	-36.77	-225.56	-17.11	-40.17	-252.89	-19.17	-3.40	-27.32	-2.05	12.000
20	-37.29	0.00	-16.38	-40.71	0.00	-18.38	-3.42	0.00	-2.00	12.000

Note: "-" thrust indicate compression

Des. By: RJA Chk. By: GSC

DELTA
ENGINEERS, ARCHITECTS, & LAND SURVEYORS
860 Hooper Road, Endwell, NY 13760
www.deltaengineers.com
Phone: (607) 231-6600
Fax: (607) 231-6650

JOB 2016.059.009
DESCRIPTION 28x8 under 8: 3A Case 2
SHEET NO. OF SCALE
CALCULATED BY DATE
CHECKED BY DATE

LRFR LOAD RATING - 3A Case 2

Node	Total Fac.	Factored DC+EH+EV			Factored LL			
Number	Nu (k/ft)	Nu_D (k/ft)	Mu_D (in-k/ft)	Vu_D (k/ft)	Nu_{LL} (k/ft)	$+Mu_{LL}$ (in-k/ft)	Vu_{LL} (k/ft)	Thick (in)
1	-24.33	-22.14	275.22	0.03	-2.19	35.12	0.01	10
2	-24.56	-22.37	270.08	0.80	-2.20	34.75	0.06	10
3	-24.91	-22.70	253.74	1.66	-2.21	33.38	0.16	10
4	-25.48	-23.24	225.56	2.58	-2.24	30.58	0.28	10
5	-26.21	-23.93	184.46	3.59	-2.28	25.81	0.44	10
6	-27.07	-24.72	129.08	4.72	-2.35	18.64	0.64	10
7	-28.05	-25.60	57.57	6.00	-2.45	8.74	0.84	10
8	-29.13	-26.56	-32.02	7.43	-2.57	-4.02	1.05	10.063
9	-30.29	-27.58	-141.89	9.02	-2.71	-19.60	1.25	10.063
10	-31.49	-28.61	-274.38	10.77	-2.88	-37.67	1.43	10.688
11	-32.73	-29.66	-431.26	12.63	-3.07	-57.97	1.58	12.375
12	-34.03	-30.77	-613.57	14.55	-3.26	-80.12	1.70	15.25
13	-35.39	-31.95	-822.16	16.58	-3.45	-103.67	1.79	19.25
14	-38.72	-35.06	-1058.99	1.91	-3.66	-128.11	0.07	27
15	-41.13	-37.39	-930.06	14.57	-3.73	-112.46	1.78	19.813
16	-40.60	-36.98	-787.22	16.06	-3.62	-94.88	1.97	15.438
17	-39.94	-36.44	-630.60	17.49	-3.50	-75.68	2.12	12.875
18	-39.74	-36.33	-461.04	17.83	-3.41	-55.28	2.13	12
19	-40.17	-36.77	-225.56	17.11	-3.40	-27.32	2.05	12
20	-40.71	-37.29	0.00	16.38	-3.42	0.00	2.00	12

note all shear values normalized to positive

Des. By: RJA Chk. By: GSC

DELTA
ENGINEERS, ARCHITECTS, & LAND SURVEYORS
860 Hooper Road, Endwell, NY 13760
www.deltaengineers.com
Phone: (607) 231-6600
Fax: (607) 231-6650

JOB 2016.059.009
DESCRIPTION 28x8 under 8: 3A Case 2
SHEET NO. OF SCALE
CALCULATED BY DATE
CHECKED BY DATE

Node Number	thk (in)	d (in)	As'in (prov'd) (in^2 / ft)	As'out (prov'd) (in^2 / ft)
1	10.0	8.00	0.92	0.24
2	10.0	8.00	0.92	0.24
3	10.0	8.00	0.92	0.24
4	10.0	8.00	0.92	0.24
5	10.0	8.00	0.92	0.24
6	10.0	8.00	0.92	0.24
7	10.0	8.00	0.92	0.24
8	10.1	7.56	0.92	0.24
9	10.1	7.56	0.92	1.06
10	10.7	8.19	0.24	1.06
11	12.4	9.88	0.48	1.56
12	15.3	12.75	0.48	1.56
13	19.3	16.75	0.48	1.56
14	27.0	24.50	0.48	1.56
15	19.8	17.31	0.48	1.56
16	15.4	12.94	0.48	1.56
17	12.9	10.38	0.48	1.56
18	12.0	9.50	0.48	1.56
19	12.0	9.50	0.48	1.06
20	12.0	9.50	0.48	1.06

Des. By: RJA Chk. By: GSC

DELTA
ENGINEERS, ARCHITECTS, & LAND SURVEYORS
860 Hooper Road, Endwell, NY 13760
www.deltaengineers.com
Phone: (607) 231-6600
Fax: (607) 231-6650

JOB 2016.059.009
DESCRIPTION 28x8 under 8: 3A Case 2
SHEET NO. OF SCALE
CALCULATED BY DATE
CHECKED BY DATE

LRFR LOAD RATING - 3A Case 2

Node Number	thk (in)	d (in)	As (prov'd) (in^2 / ft)	Total Fac. Nu (k/ft)	Phi Mn (in-k/ft)
1	10.0	8.00	0.92	-24.33	513.16
2	10.0	8.00	0.92	-24.56	514.05
3	10.0	8.00	0.92	-24.91	515.34
4	10.0	8.00	0.92	-25.48	517.42
5	10.0	8.00	0.92	-26.21	520.12
6	10.0	8.00	0.92	-27.07	523.26
7	10.0	8.00	0.92	-28.05	526.81
8	10.1	7.56	0.24	-29.13	239.99
9	10.1	7.56	1.06	-30.29	559.95
10	10.7	8.19	1.06	-31.49	613.58
11	12.4	9.88	1.56	-32.73	996.45
12	15.3	12.75	1.56	-34.03	1319.79
13	19.3	16.75	1.56	-35.39	1772.51
14	27.0	24.50	1.56	-38.72	2672.89
15	19.8	17.31	1.56	-41.13	1879.63
16	15.4	12.94	1.56	-40.60	1377.26
17	12.9	10.38	1.56	-39.94	1082.51
18	12.0	9.50	1.56	-39.74	982.39
19	12.0	9.50	1.06	-40.17	755.38
20	12.0	9.50	1.06	-40.71	757.68

AASHTO 12.10.4.2.4a

g = 0.85 b f'c = 61

$$\phi M_n = \frac{1}{2}\left[g(\phi_f d)^2 - Nu(2\phi_f d - h) - \frac{(g\phi_f d - N_u - A_s F_y)^2}{g} \right]$$

Des. By: RJA Chk. By: GSC

DELTA
ENGINEERS, ARCHITECTS, & LAND SURVEYORS
860 Hooper Road, Endwell, NY 13760
www.deltaengineers.com
Phone: (607) 231-6600
Fax: (607) 231-6650

JOB	2016.059.009
DESCRIPTION	28x8 under 8: 3A Case 2
SHEET NO.	OF
SCALE	
CALCULATED BY	
DATE	
CHECKED BY	
DATE	

LRFR LOAD RATING - 3A Case 2

Node Number	thk (in)	d (in)	Phi Mn (in-k/ft)	Mu_D (in-k/ft)	$+Mu_{LL}$ (in-k/ft)	Inventory Rating	Operating Rating
1	10.0	8.00	513.16	275.22	35.12	6.77	8.78
2	10.0	8.00	514.05	270.08	34.75	7.02	9.10
3	10.0	8.00	515.34	253.74	33.38	7.84	10.16
4	10.0	8.00	517.42	225.56	30.58	9.55	12.37
5	10.0	8.00	520.12	184.46	25.81	13.00	16.86
6	10.0	8.00	523.26	129.08	18.64	21.15	27.42
7	10.0	8.00	526.81	57.57	8.74	53.71	69.63
8	10.1	7.56	239.99	-32.02	-4.02	51.73	67.06
9	10.1	7.56	559.95	-141.89	-19.60	21.33	27.66
10	10.7	8.19	613.58	-274.38	-37.67	9.01	11.67
11	12.4	9.88	996.45	-431.26	-57.97	9.75	12.64
12	15.3	12.75	1319.79	-613.57	-80.12	8.81	11.43
13	19.3	16.75	1772.51	-822.16	-103.67	9.17	11.88
14	27.0	24.50	2672.89	-1058.99	-128.11	12.60	16.33
15	19.8	17.31	1879.63	-930.06	-112.46	8.44	10.95
16	15.4	12.94	1377.26	-787.22	-94.88	6.22	8.06
17	12.9	10.38	1082.51	-630.60	-75.68	5.97	7.74
18	12.0	9.50	982.39	-461.04	-55.28	9.43	12.22
19	12.0	9.50	755.38	-225.56	-27.32	19.39	25.14
20	12.0	9.50	757.68	0.00	0.00	N/A	N/A
					Controlling	**5.97**	**7.74**

g = 0.85 b f'c = .61

$$\phi M_n = \frac{1}{2}\left[g(\phi_f d)^2 - Nu(2\phi_f d - h) - \frac{(g\phi_f d - N_u - A_s F_y)^2}{g} \right]$$

Des. By: RJA Chk. By: GSC

DELTA ENGINEERS
184 Court Street
BINGHAMTON, NEW YORK 13901
(607) 231-6600 Fax 231-6650

JOB	2016.059.009
DESCRIPTION	28x8 under 8: 3A Case 2
SHEET NO.	OF
SCALE	
CALCULATED BY	
DATE	
CHECKED BY	
DATE	

LRFR LOAD RATING - 3A Case 2

Elmt Nmbr	thk (in)	d (in)	As (prov'd) (in^2 / ft)	Vtotal (kip/ft)	Vdl only (kip/ft)	Vll only (kip/ft)	Vn=Vc+Vs ϕVn (kip/ft)	1.75 INV	1.35 OPR
1	10.0	8.000	0.92	0.04	0.03	0.01	12.79	1281	1660
2	10.0	8.000	0.92	0.86	0.80	0.06	12.80	185.5	240.5
3	10.0	8.000	0.92	1.81	1.66	0.16	12.82	71.75	93.01
4	10.0	8.000	0.92	2.86	2.58	0.28	12.84	36.37	47.14
5	10.0	8.000	0.92	4.04	3.59	0.44	12.88	20.88	27.07
6	10.0	8.000	0.92	5.36	4.72	0.64	13.55	13.89	18.01
7	10.0	8.000	0.92	6.84	6.00	0.84	30.53	29.09	37.71
8	10.1	7.563	0.24	8.48	7.43	1.05	29.61	21.04	27.27
9	10.1	7.563	1.06	10.28	9.02	1.25	21.67	10.1	13.09
10	10.7	8.188	1.06	12.20	10.77	1.43	15.54	3.338	4.327
11	12.4	9.875	1.56	14.21	12.63	1.58	18.22	3.539	4.588
12	15.3	12.750	1.56	16.25	14.55	1.70	20.30	3.375	4.375
13	19.3	16.750	1.56	18.37	16.58	1.79	24.27	4.305	5.58
14	27.0	24.500	1.56	1.98	1.91	0.07	30.16	397.1	514.7
15	19.8	17.313	1.56	16.35	14.57	1.78	24.18	5.393	6.992
16	15.4	12.938	1.56	18.03	16.06	1.97	20.77	2.389	3.097
17	12.9	10.375	1.56	19.61	17.49	2.12	47.61	14.19	18.39
18	12.0	9.500	1.56	19.96	17.83	2.13	47.78	14.05	18.21
19	12.0	9.500	1.06	19.17	17.11	2.05	57.00	19.44	25.2
20	12.0	9.500	1.06	18.38	16.38	2.00	66.14	24.83	32.18
							controling:	**2.389**	**3.097**

$$F_d = 0.8 + \frac{1.6}{d} \le 1.3$$

$$F_n = 1 + \frac{N_u}{24 * thk}$$

$$\rho = \frac{A_s}{\phi bd} \le 0.02$$

$$\phi V_n = \phi 0.0316 b d F_{vp} \sqrt{f'c}\left(1.1 + 63\rho\right)\left(\frac{F_d F_n}{F_c}\right)$$

$$F_c = 1 \pm \left(\frac{d}{2 * rad}\right)$$

Shear Resistance With Stirrups **AASHTO 12.10.4.2.5**

Des. By: RJA Chk. By: GSC

DELTA ENGINEERS
184 Court Street
BINGHAMTON, NEW YORK 13901
(607) 231-6600 Fax 231-6650

JOB	2016.059.009
DESCRIPTION	28x8 under 8: 3A Case 2
SHEET NO	OF
SCALE	0
CALCULATED BY	
DATE	
CHECKED BY	
DATE	

Arch Design

Positive Moment Design (cont.)

Shear Resistance With Radial Stirrups **AASHTO 12.10.4.2.6**

Element Number	thk (in)	d (in)	Sv MAX (in)	Sv Act (in)	Avr (in^2 / ft)	Sv MAX (in)	Sv Act (in)	Avs (in^2 / ft)	ϕVs (k/ft)
1	10.0	8.13	5.48	0.00	0.00	5.48	0.00	0.00	0
2	10.0	8.13	5.48	0.00	0.00	5.48	0.00	0.00	0
3	10.0	8.13	5.48	0.00	0.00	5.48	0.00	0.00	0
4	10.0	8.13	5.48	0.00	0.00	5.48	0.00	0.00	0
5	10.0	8.13	5.48	0.00	0.00	5.48	0.00	0.00	0
6	10.0	8.13	5.48	0.00	0.00	5.48	0.00	0.00	0
7	10.0	8.13	5.48	0.00	0.00	5.48	0.00	0.00	0
8	10.1	7.69	5.19	0.00	0.00	5.19	0.00	0.00	0
9	10.1	7.69	5.19	0.00	0.00	5.19	0.00	0.00	0
10	10.7	8.31	5.61	0.00	0.00	5.61	0.00	0.00	0
11	12.4	10.00	6.75	0.00	0.00	6.75	0.00	0.00	0
12	15.3	12.88	8.69	0.00	0.00	8.69	0.00	0.00	0
13	19.3	16.88	11.39	0.00	0.00	11.39	0.00	0.00	0
14	27.0	24.63	16.62	0.00	0.00	16.62	0.00	0.00	0
15	19.8	17.44	11.77	0.00	0.00	11.77	0.00	0.00	0
16	15.4	13.06	8.82	0.00	0.00	8.82	0.00	0.00	0
17	12.9	10.50	7.09	4.50	0.01	7.09	4.50	0.03	28.67
18	12.0	9.63	6.50	4.50	0.01	6.50	4.50	0.05	26.54
19	12.0	9.63	6.50	4.50	0.00	6.50	4.50	0.03	27.12
20	12.0	9.63	6.50	4.50	0.00	6.50	4.50	0.02	26.98

For Radial Tension

$$A_{vr} = \frac{1.1 s_v \left(M_u - 0.45 N_u \phi_r d\right)}{f_y r_s \phi_r d}$$

$$s_v \le 0.75 \phi_r d$$

For Shear

$$A_{vs} = \frac{1.1 s_v}{f_y \phi_v d}\left(V_u F_c - V_c\right) + A_{vr}$$

$$V_c = \frac{4V_r}{\frac{M_{nu}}{V_u d} + 1} \le 0.0633 \phi_v b d \sqrt{f'_c}$$

Mnu=Mu-Nu(4h-d)/8

rearanging Avs equation above and

taking Fc =1.0, Vs = (Avs-Avr)*Fys*ϕv*d/(1.1*Sv) (<8*√F'c*Bw*d)

(#3@4.5")

As provided = 0.293 sq.in. / L.F.

Des. By: RJA Chk. By: GSC

DELTA
ENGINEERS, ARCHITECTS, & LAND SURVEYORS
860 Hooper Road, Endwell, NY 13760
www.deltaengineers.com
Phone: (607) 231-6600
Fax: (607) 231-6650

JOB	2016.059.009
DESCIPTION	28x8u8.6
SHEET NO.	____ OF ____ SCALE ____
CALCULATED BY	____ DATE ____
CHECKED BY	____ DATE ____

span 28 ft

leg thickness 12 inches

traffic parallel with main reinforcement

4A TRUCK

Axle applied at center (1/2 magnitude since mirrored)

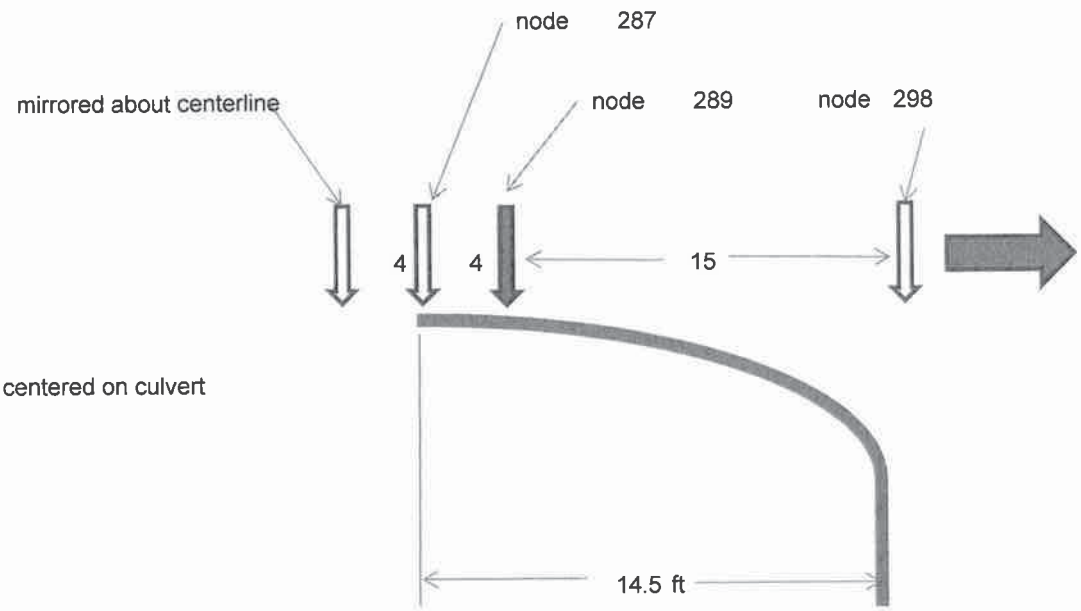

case 1

rear axle group centered on culvert

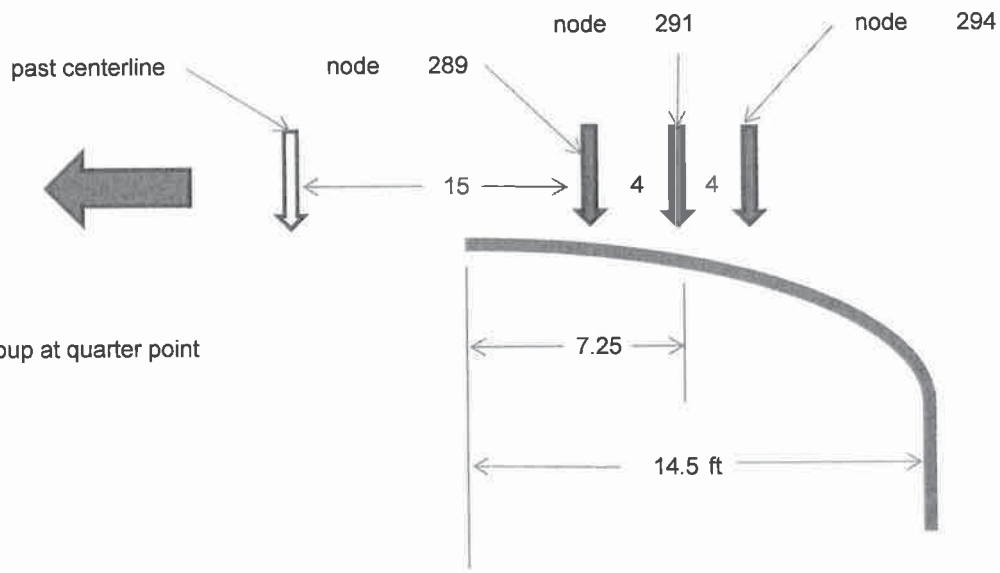

case 2

rear axle group at quarter point

Des. By: RJA Chk. By: GSC

DELTA
ENGINEERS, ARCHITECTS, & LAND SURVEYORS
860 Hooper Road, Endwell, NY 13760
www.deltaengineers.com
Phone: (607) 231-6600
Fax: (607) 231-6650

JOB	2016.059.009
DESCIPTION	28x8u8.6
SHEET NO.	OF
SCALE	
CALCULATED BY	
DATE	
CHECKED BY	
DATE	

4A truck 8.6 ft earth cover (controls)

Load Case	Description	
1	4A	truck at center
2	4A	truck at quarter point

Boundary conditions

Case 1			Case 2		
node	step	force	node	step	force
287	12	-11.30	289	12	-22.60
287	13	-11.30	289	13	-22.60
287	14	-11.30	289	14	-22.60
287	15	-11.30	289	15	-22.60
289	12	-22.60	291	12	-22.60
289	13	-22.60	291	13	-22.60
289	14	-22.60	291	14	-22.60
289	12	-22.60	291	12	-22.60
298	13	-14.20	294	13	-22.60
298	14	-14.20	294	14	-22.60
298	15	-14.20	294	15	-22.60
298	15	-14.20	294	15	-22.60

capacity demand ratio

	Case 1		Case 2		
failure mode	node	ratio	node	ratio	
steel yeilding	17	0.763	17	0.796	
concrete crushing	17	0.773	17	0.793	
shear failure	17	1.018	17	1.055	Controls
radial tension failure	1	0.116	1	0.117	

Des. By: RJA Chk. By: GSC

*** WELCOME TO CANDE-2013(version 3/1/2013) ***

USER TITLE: 28x8_u8.6_4A_c1

* * * BOUNDARY CONDITIONS * * *
(FORCES = LBS; DISPLACEMENTS = INCHES; ROTATIONS = DEGREES)

BOUNDARY NODE	LOAD STEP	X-FORCE OR X-DISPLACEMENT	Y-FORCE OR Y-DISPLACEMENT	X-Y ROTATION BEAM ROTATIONAL BOUNDARY CONDITIONS
287	12	F = 0.0000E+00	F = -0.1130E+02	0.0000E+00 F
287	13	F = 0.0000E+00	F = -0.1130E+02	0.0000E+00 F
287	14	F = 0.0000E+00	F = -0.1130E+02	0.0000E+00 F
287	15	F = 0.0000E+00	F = -0.1130E+02	0.0000E+00 F
289	12	F = 0.0000E+00	F = -0.2260E+02	0.0000E+00 F
289	13	F = 0.0000E+00	F = -0.2260E+02	0.0000E+00 F
289	14	F = 0.0000E+00	F = -0.2260E+02	0.0000E+00 F
289	12	F = 0.0000E+00	F = -0.2260E+02	0.0000E+00 F
298	13	F = 0.0000E+00	F = -0.1420E+02	0.0000E+00 F
298	14	F = 0.0000E+00	F = -0.1420E+02	0.0000E+00 F
298	15	F = 0.0000E+00	F = -0.1420E+02	0.0000E+00 F
298	15	F = 0.0000E+00	F = -0.1420E+02	0.0000E+00 F
287	15	F = 0.0000E+00	F = 0.0000E+00	0.0000E+00 F
288	15	F = 0.0000E+00	F = 0.0000E+00	0.0000E+00 F
289	15	F = 0.0000E+00	F = 0.0000E+00	0.0000E+00 F
290	15	F = 0.0000E+00	F = 0.0000E+00	0.0000E+00 F
291	15	F = 0.0000E+00	F = 0.0000E+00	0.0000E+00 F
292	15	F = 0.0000E+00	F = 0.0000E+00	0.0000E+00 F
293	15	F = 0.0000E+00	F = 0.0000E+00	0.0000E+00 F
294	15	F = 0.0000E+00	F = 0.0000E+00	0.0000E+00 F
295	15	F = 0.0000E+00	F = 0.0000E+00	0.0000E+00 F
296	15	F = 0.0000E+00	F = 0.0000E+00	0.0000E+00 F

LRFD TOTAL LOAD FACTORS PER LOAD STEP

LOAD STEP	LOAD FACTOR	USER COMMENT
1	1.313	Factor for load step #1

2	0.857	Factor for load step #2
3	0.857	Factor for load step #3
4	0.857	Factor for load step #4
5	1.365	Factor for load step #5
6	1.365	Factor for load step #6
7	1.365	Factor for load step #7
8	1.365	Factor for load step #8
9	1.365	Factor for load step #9
10	1.365	Factor for load step #10
11	1.365	Factor for load step #11
12	1.350	Factor for load step #12
13	1.350	Factor for load step #13
14	1.350	Factor for load step #14
15	1.350	Factor for load step #15

+

FINITE ELEMENT OUTPUT FOR LOAD STEP 15

+

CONCRETE, FACTORED-EVALUATION FOR GROUP 1, LOAD-STEP 15

STRUCTURAL RESPONSES OF CONCRETE-GROUP 1, LOAD-STEP 15
COORDINATES, DISPLACEMENTS AND CRACK DEPTHS ARE INCHES
Y-BAR IS "NEUTRAL AXIS" LOCATION FROM INTERIOR, INCHES
PRESSURES ARE LB/IN**2
MOMENTS ARE IN-LB/IN
THRUST AND SHEAR ARE LB/IN

LOCAL NODE	X-COORD. Y-COORD.	X-DISP. Y-DISP.	N-PRES. S-PRES.	MOMENT THRUST	Y-BAR CRACK DEPTH
1	0.00	0.00000E+00	-0.10252E+02	0.26447E+05	0.74705E+01
	101.00	-0.22679E+01	-0.19930E+00	-0.19734E+04	0.70155E+01
2	13.43	-0.89765E-03	-0.10479E+02	0.25904E+05	0.73190E+01
	100.76	-0.22442E+01	-0.15556E+01	-0.19974E+04	0.69889E+01
3	26.84	0.13409E-02	-0.10707E+02	0.24201E+05	0.73190E+01
	100.08	-0.21741E+01	-0.29120E+01	-0.20322E+04	0.69573E+01
4	40.22	0.94881E-02	-0.11193E+02	0.21313E+05	0.74181E+01
	98.95	-0.20611E+01	-0.40532E+01	-0.20871E+04	0.68873E+01
5	53.56	0.25756E-01	-0.11825E+02	0.17178E+05	0.74181E+01
	97.38	-0.19108E+01	-0.45427E+01	-0.21564E+04	0.67419E+01
6	66.84	0.51443E-01	-0.12743E+02	0.11712E+05	0.74181E+01

	95.38	-0.17317E+01	-0.48540E+01	-0.22349E+04	0.63488E+01
7	80.05	0.86296E-01	-0.13745E+02	0.47874E+04	0.50615E+01
	92.93	-0.15389E+01	-0.50151E+01	-0.23204E+04	0.27099E+00
8	93.16	0.12810E+00	-0.14918E+02	-0.37397E+04	0.20283E+01
	90.05	-0.13442E+01	-0.51343E+01	-0.24122E+04	0.69546E+01
9	106.18	0.17311E+00	-0.16179E+02	-0.14040E+05	0.25648E+01
	86.73	-0.11606E+01	-0.48244E+01	-0.25075E+04	0.66379E+01
10	119.08	0.21607E+00	-0.17095E+02	-0.26299E+05	0.28493E+01
	82.99	-0.10070E+01	-0.43982E+01	-0.26031E+04	0.73604E+01
11	131.84	0.25355E+00	-0.17657E+02	-0.40649E+05	0.34229E+01
	78.82	-0.88744E+00	-0.40773E+01	-0.26998E+04	0.82988E+01
12	144.47	0.28467E+00	-0.17996E+02	-0.57170E+05	0.40506E+01
	74.23	-0.79811E+00	-0.38742E+01	-0.27995E+04	0.10466E+02
13	156.93	0.31014E+00	-0.18852E+02	-0.75924E+05	0.44678E+01
	69.23	-0.73166E+00	-0.36424E+01	-0.29041E+04	0.13535E+02
14	169.22	0.33134E+00	-0.23229E+02	-0.97077E+05	0.55838E+01
	63.82	-0.68093E+00	-0.17356E+02	-0.31648E+04	0.19555E+02
15	171.39	0.36103E+00	-0.10563E+02	-0.85178E+05	0.45538E+01
	54.75	-0.67300E+00	-0.46424E+01	-0.33542E+04	0.13921E+02
16	172.91	0.38290E+00	-0.10684E+02	-0.72021E+05	0.42445E+01
	45.55	-0.66849E+00	-0.46118E+01	-0.33125E+04	0.10637E+02
17	173.78	0.39159E+00	-0.11544E+02	-0.57634E+05	0.36636E+01
	36.26	-0.66664E+00	-0.48439E+01	-0.32599E+04	0.87179E+01
18	174.00	0.38320E+00	-0.12538E+02	-0.42113E+05	0.34579E+01
	26.94	-0.66570E+00	-0.47429E+01	-0.32454E+04	0.79509E+01
19	174.00	0.34228E+00	-0.48918E+01	-0.20613E+05	0.30043E+01
	13.47	-0.66398E+00	-0.22828E+01	-0.32818E+04	0.78513E+01
20	174.00	0.28547E+00	0.27548E+01	-0.50022E-11	0.60775E+01
	0.00	-0.66294E+00	0.17741E+00	-0.33266E+04	0.00000E+00

SHEAR FORCE DIAGNOSTCS FOR CONCRETE-GROUP 1, LOAD STEP 15
-- V-factor is coefficient of sqrt(PFPC) equal to capacity.
-- Shear depth "d" is negative if measured from outer wall.
-- Stirrup load is excess shear force above capacity.

NODE	EQUIVALENT V-factor	SHEAR CAPACITY lbs/inch	APPLIED SHEAR lbs/inch	APPLIED/ CAPACITY ratio	SHEAR DEPTH-d inches	STIRRUP LOAD lbs/inch
1	1.83	1181.15	-2.73	0.002	8.00	0.00
2	1.83	1182.44	83.60	0.071	8.00	0.00
3	1.84	1184.31	170.89	0.144	8.00	0.00
4	1.84	1187.26	261.47	0.220	8.00	0.00
5	1.85	1190.99	357.45	0.300	8.00	0.00
6	2.08	1339.86	461.30	0.344	8.00	0.00
7	4.50	2900.32	575.27	0.198	8.00	0.00
8	4.50	2741.89	700.96	0.256	-7.56	0.00
9	3.14	1912.10	839.86	0.439	-7.56	0.00
10	2.11	1396.02	990.65	0.710	-8.19	0.00

11	2.12	1685.57	1149.35	0.682	-9.88	0.00
12	1.83	1877.20	1313.28	0.700	-12.75	0.00
13	1.65	2222.25	1485.74	0.669	-16.75	0.00
14	1.41	2789.68	149.62	0.054	-24.50	0.00
15	1.60	2235.00	-1343.30	0.601	-17.31	0.00
16	1.84	1918.86	-1476.72	0.770	-12.94	0.00
17	2.09	1749.91	-1603.43	0.916	-10.38	0.00
18	2.56	1963.67	-1630.17	0.830	-9.50	0.00
19	3.61	2762.22	-1563.22	0.566	-9.50	0.00
20	4.50	3444.13	-1497.33	0.435	-9.50	0.00

ASSESSMENT SUMMARY CONCRETE-GROUP 1, LOAD-STEP 15

LRFD SUMMARY EVALUATION FOR GROUP 1, LOAD STEP 15

DESIGN-CRITERION	CONTROL NODE	FACTORED DEMAND	FACTORED CAPACITY	RATIO VALUE
STEEL YIELDING (psi)	17	43492.6	57000.0	0.763
CONCRETE CRUSHING (psi)	17	3767.2	4875.0	0.773
SHEAR FAILURE (lbs/in)	17	1603.4	1574.9	1.018
RADIAL-TENSION FAIL (psi)	1	8.1	69.6	0.116

LRFD SERVICE-LOAD PERFORMANCE MEASURES FOR GROUP 1, LOAD STEP 15

NODE NUMBER FOR MAXIMUM CRACK WIDTH 17

MAXIMUM CRACK WIDTH AT SERVICE LOAD (inches) 0.00749

LRFD RATIO: MAX-CRACK-WIDTH / ALLOWABLE 0.75

SPAN LENGTH FOR AUXILIARY EQUATIONS (inches)..... 348.00

* * * * NORMAL EXIT FROM CANDE * * * *

*** WELCOME TO CANDE-2013(version 3/1/2013) ***

USER TITLE: 28x8_u8.6_4A_c2

* * * BOUNDARY CONDITIONS * * *
(FORCES = LBS; DISPLACEMENTS = INCHES; ROTATIONS = DEGREES)

BOUNDARY NODE	LOAD STEP	X-FORCE OR X-DISPLACEMENT	Y-FORCE OR Y-DISPLACEMENT	X-Y ROTATION BEAM ROTATIONAL BOUNDARY CONDITIONS
289	12	F = 0.0000E+00	F = -0.2260E+02	0.0000E+00 F
289	13	F = 0.0000E+00	F = -0.2260E+02	0.0000E+00 F
289	14	F = 0.0000E+00	F = -0.2260E+02	0.0000E+00 F
289	15	F = 0.0000E+00	F = -0.2260E+02	0.0000E+00 F
291	12	F = 0.0000E+00	F = -0.2260E+02	0.0000E+00 F
291	13	F = 0.0000E+00	F = -0.2260E+02	0.0000E+00 F
291	14	F = 0.0000E+00	F = -0.2260E+02	0.0000E+00 F
291	~~12~~ 15	F = 0.0000E+00	F = -0.2260E+02	0.0000E+00 F
294	OK ~~13~~ 12	F = 0.0000E+00	F = -0.2260E+02	0.0000E+00 F
294	~~14~~ 13	F = 0.0000E+00	F = -0.2260E+02	0.0000E+00 F
294	~~15~~ 14	F = 0.0000E+00	F = -0.2260E+02	0.0000E+00 F
294	15	F = 0.0000E+00	F = -0.2260E+02	0.0000E+00 F
287	15	F = 0.0000E+00	F = 0.0000E+00	0.0000E+00 F
288	15	F = 0.0000E+00	F = 0.0000E+00	0.0000E+00 F
289	15	F = 0.0000E+00	F = 0.0000E+00	0.0000E+00 F
290	15	F = 0.0000E+00	F = 0.0000E+00	0.0000E+00 F
291	15	F = 0.0000E+00	F = 0.0000E+00	0.0000E+00 F
292	15	F = 0.0000E+00	F = 0.0000E+00	0.0000E+00 F
293	15	F = 0.0000E+00	F = 0.0000E+00	0.0000E+00 F
294	15	F = 0.0000E+00	F = 0.0000E+00	0.0000E+00 F
295	15	F = 0.0000E+00	F = 0.0000E+00	0.0000E+00 F
296	15	F = 0.0000E+00	F = 0.0000E+00	0.0000E+00 F

LRFD TOTAL LOAD FACTORS PER LOAD STEP

LOAD STEP	LOAD FACTOR	USER COMMENT
1	1.313	Factor for load step #1

2	0.857	Factor for load step #2
3	0.857	Factor for load step #3
4	0.857	Factor for load step #4
5	1.365	Factor for load step #5
6	1.365	Factor for load step #6
7	1.365	Factor for load step #7
8	1.365	Factor for load step #8
9	1.365	Factor for load step #9
10	1.365	Factor for load step #10
11	1.365	Factor for load step #11
12	1.350	Factor for load step #12
13	1.350	Factor for load step #13
14	1.350	Factor for load step #14
15	1.350	Factor for load step #15

```
+ + + + + + + + + + + + + + + + + + + + + + + + + + + + + + + + + + + + + + + + + + +

 FINITE ELEMENT OUTPUT FOR LOAD STEP 15

+ + + + + + + + + + + + + + + + + + + + + + + + + + + + + + + + + + + + + + + + + + +

 CONCRETE, FACTORED-EVALUATION FOR GROUP  1, LOAD-STEP 15

 STRUCTURAL RESPONSES OF CONCRETE-GROUP  1, LOAD-STEP 15
 COORDINATES, DISPLACEMENTS AND CRACK DEPTHS ARE INCHES
 Y-BAR IS "NEUTRAL AXIS" LOCATION FROM INTERIOR, INCHES
 PRESSURES ARE LB/IN**2
 MOMENTS ARE IN-LB/IN
 THRUST AND SHEAR ARE  LB/IN
```

LOCAL NODE	X-COORD. Y-COORD.	X-DISP. Y-DISP.	N-PRES. S-PRES.	MOMENT THRUST	Y-BAR CRACK DEPTH
1	0.00	0.00000E+00	-0.97425E+01	0.26782E+05	0.73190E+01
	101.00	-0.23373E+01	-0.14205E+00	-0.20575E+04	0.69888E+01
2	13.43	-0.94173E-03	-0.10260E+02	0.26288E+05	0.73190E+01
	100.76	-0.23132E+01	-0.13644E+01	-0.20788E+04	0.69782E+01
3	26.84	0.12972E-02	-0.10778E+02	0.24711E+05	0.73190E+01
	100.08	-0.22421E+01	-0.25868E+01	-0.21098E+04	0.69491E+01
4	40.22	0.95648E-02	-0.11567E+02	0.21969E+05	0.74181E+01
	98.95	-0.21270E+01	-0.36941E+01	-0.21598E+04	0.68868E+01
5	53.56	0.26162E-01	-0.12482E+02	0.17946E+05	0.74181E+01
	97.38	-0.19735E+01	-0.42281E+01	-0.22244E+04	0.67522E+01
6	66.84	0.52489E-01	-0.13623E+02	0.12503E+05	0.74181E+01

	95.38	-0.17899E+01	-0.46510E+01	-0.22993E+04	0.63927E+01
7	80.05	0.88330E-01	-0.14756E+02	0.54713E+04	0.50615E+01
	92.93	-0.15917E+01	-0.49551E+01	-0.23833E+04	0.80455E+00
8	93.16	0.13141E+00	-0.15953E+02	-0.33171E+04	0.20283E+01
	90.05	-0.13910E+01	-0.52424E+01	-0.24761E+04	0.68053E+01
9	106.18	0.17803E+00	-0.17165E+02	-0.14038E+05	0.25648E+01
	86.73	-0.12009E+01	-0.51296E+01	-0.25752E+04	0.66164E+01
10	119.08	0.22282E+00	-0.18032E+02	-0.26863E+05	0.28493E+01
	82.99	-0.10408E+01	-0.48456E+01	-0.26773E+04	0.73557E+01
11	131.84	0.26210E+00	-0.18509E+02	-0.41918E+05	0.35427E+01
	78.82	-0.91565E+00	-0.46237E+01	-0.27823E+04	0.82980E+01
12	144.47	0.29489E+00	-0.18704E+02	-0.59259E+05	0.40506E+01
	74.23	-0.82162E+00	-0.44576E+01	-0.28917E+04	0.10471E+02
13	156.93	0.32185E+00	-0.19374E+02	-0.78921E+05	0.44678E+01
	69.23	-0.75133E+00	-0.42837E+01	-0.30067E+04	0.13544E+02
14	169.22	0.34441E+00	-0.23521E+02	-0.10103E+06	0.55838E+01
	63.82	-0.69740E+00	-0.18223E+02	-0.32849E+04	0.19568E+02
15	171.39	0.37614E+00	-0.10557E+02	-0.88709E+05	0.45538E+01
	54.75	-0.68894E+00	-0.46101E+01	-0.34845E+04	0.13929E+02
16	172.91	0.39974E+00	-0.10792E+02	-0.75043E+05	0.42445E+01
	45.55	-0.68410E+00	-0.46011E+01	-0.34388E+04	0.10636E+02
17	173.78	0.40959E+00	-0.11804E+02	-0.60074E+05	0.36636E+01
	36.26	-0.68210E+00	-0.48531E+01	-0.33817E+04	0.87185E+01
18	174.00	0.40161E+00	-0.12926E+02	-0.43913E+05	0.34579E+01
	26.94	-0.68111E+00	-0.47226E+01	-0.33640E+04	0.79528E+01
19	174.00	0.36001E+00	-0.49140E+01	-0.21511E+05	0.30043E+01
	13.47	-0.67932E+00	-0.22916E+01	-0.33996E+04	0.78624E+01
20	174.00	0.30182E+00	0.30979E+01	0.66166E-10	0.60775E+01
	0.00	-0.67825E+00	0.13929E+00	-0.34445E+04	0.00000E+00

SHEAR FORCE DIAGNOSTCS FOR CONCRETE-GROUP 1, LOAD STEP 15
-- V-factor is coefficient of sqrt(PFPC) equal to capacity.
-- Shear depth "d" is negative if measured from outer wall.
-- Stirrup load is excess shear force above capacity.

NODE	EQUIVALENT V-factor	SHEAR CAPACITY lbs/inch	APPLIED SHEAR lbs/inch	APPLIED/ CAPACITY ratio	SHEAR DEPTH-d inches	STIRRUP LOAD lbs/inch
1	1.84	1185.67	-3.59	0.003	8.00	0.00
2	1.84	1186.81	77.11	0.065	8.00	0.00
3	1.84	1188.48	160.78	0.135	8.00	0.00
4	1.85	1191.17	251.85	0.211	8.00	0.00
5	1.85	1194.64	352.44	0.295	8.00	0.00
6	1.98	1279.79	464.41	0.363	8.00	0.00
7	4.50	2900.32	588.98	0.203	8.00	0.00
8	4.50	2741.89	726.31	0.265	-7.56	0.00
9	3.25	1979.90	876.62	0.443	-7.56	0.00
10	2.16	1427.85	1037.98	0.727	-8.19	0.00

11	2.12	1690.64	1206.11	0.713	-9.88	0.00
12	1.83	1882.39	1377.63	0.732	-12.75	0.00
13	1.66	2238.94	1555.14	0.695	-16.75	0.00
14	1.42	2795.55	162.57	0.058	-24.50	0.00
15	1.61	2241.78	-1393.23	0.621	-17.31	0.00
16	1.85	1925.94	-1535.22	0.797	-12.94	0.00
17	2.10	1757.26	-1668.96	0.950	-10.38	0.00
18	2.57	1969.80	-1697.95	0.862	-9.50	0.00
19	3.62	2770.35	-1630.02	0.588	-9.50	0.00
20	4.50	3625.40	-1563.83	0.431	10.00	0.00

ASSESSMENT SUMMARY CONCRETE-GROUP 1, LOAD-STEP 15

LRFD SUMMARY EVALUATION FOR GROUP 1, LOAD STEP 15

DESIGN-CRITERION	CONTROL NODE	FACTORED DEMAND	FACTORED CAPACITY	RATIO VALUE
STEEL YIELDING (psi)	17	45393.7	57000.0	0.796
CONCRETE CRUSHING (psi)	17	3865.3	4875.0	0.793
SHEAR FAILURE (lbs/in)	17	1669.0	1581.5	1.055
RADIAL-TENSION FAIL (psi)	1	8.2	69.6	0.117

LRFD SERVICE-LOAD PERFORMANCE MEASURES FOR GROUP 1, LOAD STEP 15

NODE NUMBER FOR MAXIMUM CRACK WIDTH 17

MAXIMUM CRACK WIDTH AT SERVICE LOAD (inches) 0.00829

LRFD RATIO: MAX-CRACK-WIDTH / ALLOWABLE 0.83

SPAN LENGTH FOR AUXILIARY EQUATIONS (inches)..... 348.00

* * * * NORMAL EXIT FROM CANDE * * * *

DELTA
ENGINEERS, ARCHITECTS, & LAND SURVEYORS
860 Hooper Road, Endwell, NY 13760
www.deltaengineers.com
Phone: (607) 231-6600
Fax: (607) 231-6650

JOB	2016.059.009		
DESCRIPTION	28x8 under 8: 4A Case 2		
SHEET NO.	OF	SCALE	
CALCULATED BY	rja	DATE	7/28/2016
CHECKED BY		DATE	

LRFR LOAD RATING - 4A Case 2

Technical Data & Load Factors

Culvert Span (S) =	29.00 ft.	(C to C)	
Crown Radius (Rad) =	33.83 ft.		
Bar Cover			
Outside Face (Cov_{out}) =	2.00 in		
Inside Face (Cov_{in}) =	1.50 in		
Design Section Length (b) =	12 in		
Compressive Strength (f_c) =	6.5 ksi		
Yield Strength (f_y) =	60 ksi		
Stirrup Yield Strength (f_{ystir}) =	60 ksi		
Circumferential Reinforcement Spa. (spa.) =	5.00 in		
Circumferential Reinforcement Provided (n) =	1	(n=1 for 1 layer, n=2 for multiple layers)	AASHTO
Reinforcement Type (Type) =	3	AASHTO Table	12.10.4.2.4d
1 - smooth wire or plain bar		12.10.4.4d-1	
2 - WWF (8" max spa. Smooth)			
3 - WWF (deformed) or bar (deformed)			

Resistance Factors:

ϕf - Flexure =	1.00	AASHTO Table 12.5.5-1
ϕr - Radial Tension =	0.90	
ϕv - Diag Tension =	0.90	
Radial Tension Process (F_{rp}) =	1.00	AASHTO 12.10.4.2.3
Diag Tension Process (F_{vp}) =	1.00	

Load Factors:

	IR	OR	
LL Factor	1.75	1.35	load modification factors already applied to magnitude
γ_pDC (component)	1.31	(1.25*1.05)	
γ_pEH (hor. At rest earth pressure)	0.86	(0.9/1.05)	
γ_pEV	1.37	(1.3*1.05)	
State Trucks		1.45	(ADTT = 280)

Des. By: RJA Chk. By: GSC

DELTA
ENGINEERS, ARCHITECTS, & LAND SURVEYORS
860 Hooper Road, Endwell, NY 13760
www.deltaengineers.com
Phone: (607) 231-6600
Fax: (607) 231-6650

JOB	2016.059.009		
DESCRIPTION	28x8 under 8: 4A Case 2		
SHEET NO.		OF	
CALCULATED BY		DATE	
CHECKED BY		DATE	

Design Force Summary

	Factored DC+EV+EH			Max Factored Total Load			Max Factored LL			
Node Number	Factored Thrust Nu (k/ft)	Factored Moment Mu (k-in/ft)	Factored Shear Vu (k/ft)	Factored Thrust Nu (k/ft)	Factored Moment Mu (k-in/ft)	Factored Shear Vu (k/ft)	Factored Thrust Nu (k/ft)	Factored Moment Mu (k-in/ft)	Factored Shear Vu (k/ft)	Thk at node (in)
1	-22.14	275.22	-0.03	-24.69	321.38	-0.04	-2.55	46.16	-0.01	10.000
2	-22.37	270.08	0.80	-24.95	315.46	0.93	-2.58	45.37	0.13	10.000
3	-22.70	253.74	1.66	-25.32	296.53	1.93	-2.61	42.79	0.27	10.000
4	-23.24	225.56	2.58	-25.92	263.63	3.02	-2.68	38.06	0.44	10.000
5	-23.93	184.46	3.59	-26.69	215.35	4.23	-2.76	30.89	0.64	10.000
6	-24.72	129.08	4.72	-27.59	150.04	5.57	-2.87	20.95	0.85	10.000
7	-25.60	57.57	6.00	-28.60	65.66	7.07	-3.00	8.08	1.07	10.000
8	-26.56	-32.02	7.43	-29.71	-39.81	8.72	-3.15	-7.78	1.29	10.063
9	-27.58	-141.89	9.02	-30.90	-168.46	10.52	-3.32	-26.57	1.50	10.063
10	-28.61	-274.38	10.77	-32.13	-322.36	12.46	-3.52	-47.98	1.68	10.688
11	-29.66	-431.26	12.63	-33.39	-503.02	14.47	-3.73	-71.76	1.85	12.375
12	-30.77	-613.57	14.55	-34.70	-711.11	16.53	-3.93	-97.54	1.98	15.250
13	-31.95	-822.16	16.58	-36.08	-947.05	18.66	-4.14	-124.90	2.08	19.250
14	-35.06	-1058.99	1.91	-39.42	-1212.36	1.95	-4.36	-153.37	0.05	27.000
15	-37.39	-930.06	-14.57	-41.81	-1064.51	-16.72	-4.42	-134.45	-2.15	19.813
16	-36.98	-787.22	-16.06	-41.27	-900.52	-18.42	-4.28	-113.29	-2.37	15.438
17	-36.44	-630.60	-17.49	-40.58	-720.89	-20.03	-4.14	-90.29	-2.54	12.875
18	-36.33	-461.04	-17.83	-40.37	-526.96	-20.38	-4.04	-65.92	-2.54	12.000
19	-36.77	-225.56	-17.11	-40.80	-258.13	-19.56	-4.02	-32.57	-2.45	12.000
20	-37.29	0.00	-16.38	-41.33	0.00	-18.77	-4.05	0.00	-2.39	12.000

Note: "-" thrust indicate compression

Des. By: RJA Chk. By: GSC

DELTA
ENGINEERS, ARCHITECTS, & LAND SURVEYORS
860 Hooper Road, Endwell, NY 13760
www.deltaengineers.com
Phone: (607) 231-6600
Fax: (607) 231-6650

JOB 2016.059.009
DESCRIPTION 28x8 under 8: 4A Case 2
SHEET NO. OF SCALE
CALCULATED BY DATE
CHECKED BY DATE

LRFR LOAD RATING - 4A Case 2

Node	Total Fac.	Factored DC+EH+EV			Factored LL			
Number	Nu (k/ft)	Nu_D (k/ft)	Mu_D (in-k/ft)	Vu_D (k/ft)	Nu_{LL} (k/ft)	$+Mu_{LL}$ (in-k/ft)	Vu_{LL} (k/ft)	Thick (in)
1	-24.69	-22.14	275.22	0.03	-2.55	46.16	0.01	10
2	-24.95	-22.37	270.08	0.80	-2.58	45.37	0.13	10
3	-25.32	-22.70	253.74	1.66	-2.61	42.79	0.27	10
4	-25.92	-23.24	225.56	2.58	-2.68	38.06	0.44	10
5	-26.69	-23.93	184.46	3.59	-2.76	30.89	0.64	10
6	-27.59	-24.72	129.08	4.72	-2.87	20.95	0.85	10
7	-28.60	-25.60	57.57	6.00	-3.00	8.08	1.07	10
8	-29.71	-26.56	-32.02	7.43	-3.15	-7.78	1.29	10.063
9	-30.90	-27.58	-141.89	9.02	-3.32	-26.57	1.50	10.063
10	-32.13	-28.61	-274.38	10.77	-3.52	-47.98	1.68	10.688
11	-33.39	-29.66	-431.26	12.63	-3.73	-71.76	1.85	12.375
12	-34.70	-30.77	-613.57	14.55	-3.93	-97.54	1.98	15.25
13	-36.08	-31.95	-822.16	16.58	-4.14	-124.90	2.08	19.25
14	-39.42	-35.06	-1058.99	1.91	-4.36	-153.37	0.05	27
15	-41.81	-37.39	-930.06	14.57	-4.42	-134.45	2.15	19.813
16	-41.27	-36.98	-787.22	16.06	-4.28	-113.29	2.37	15.438
17	-40.58	-36.44	-630.60	17.49	-4.14	-90.29	2.54	12.875
18	-40.37	-36.33	-461.04	17.83	-4.04	-65.92	2.54	12
19	-40.80	-36.77	-225.56	17.11	-4.02	-32.57	2.45	12
20	-41.33	-37.29	0.00	16.38	-4.05	0.00	2.39	12

note all shear values normalized to positive

Des. By: RJA Chk. By: GSC

DELTA
ENGINEERS, ARCHITECTS, & LAND SURVEYORS
860 Hooper Road, Endwell, NY 13760
www.deltaengineers.com
Phone: (607) 231-6600
Fax: (607) 231-6650

JOB	2016.059.009		
DESCRIPTION	28x8 under 8: 4A Case 2		
SHEET NO	OF	SCALE	
CALCULATED BY		DATE	
CHECKED BY		DATE	

Node Number	thk (in)	d (in)	As'in (prov'd) (in^2 / ft)	As'out (prov'd) (in^2 / ft)
1	10.0	8.00	0.92	0.24
2	10.0	8.00	0.92	0.24
3	10.0	8.00	0.92	0.24
4	10.0	8.00	0.92	0.24
5	10.0	8.00	0.92	0.24
6	10.0	8.00	0.92	0.24
7	10.0	8.00	0.92	0.24
8	10.1	7.56	0.92	0.24
9	10.1	7.56	0.92	1.06
10	10.7	8.19	0.24	1.06
11	12.4	9.88	0.48	1.56
12	15.3	12.75	0.48	1.56
13	19.3	16.75	0.48	1.56
14	27.0	24.50	0.48	1.56
15	19.8	17.31	0.48	1.56
16	15.4	12.94	0.48	1.56
17	12.9	10.38	0.48	1.56
18	12.0	9.50	0.48	1.56
19	12.0	9.50	0.48	1.06
20	12.0	9.50	0.48	1.06

Des. By: RJA Chk. By: GSC

DELTA
ENGINEERS, ARCHITECTS, & LAND SURVEYORS
860 Hooper Road, Endwell, NY 13760
www.deltaengineers.com
Phone: (607) 231-6600
Fax: (607) 231-6650

JOB	2016.059.009
DESCRIPTION	28x8 under 8: 4A Case 2
SHEET NO	OF
SCALE	
CALCULATED BY	
DATE	
CHECKED BY	
DATE	

LRFR LOAD RATING - 4A Case 2

Node Number	thk (in)	d (in)	As (prov'd) (in^2 / ft)	Total Fac. Nu (k/ft)	Phi Mn (in-k/ft)
1	10.0	8.00	0.92	-24.69	514.51
2	10.0	8.00	0.92	-24.95	515.46
3	10.0	8.00	0.92	-25.32	516.83
4	10.0	8.00	0.92	-25.92	519.03
5	10.0	8.00	0.92	-26.69	521.87
6	10.0	8.00	0.92	-27.59	525.15
7	10.0	8.00	0.92	-28.60	528.82
8	10.1	7.56	0.24	-29.71	242.51
9	10.1	7.56	1.06	-30.90	562.08
10	10.7	8.19	1.06	-32.13	615.99
11	12.4	9.88	1.56	-33.39	999.14
12	15.3	12.75	1.56	-34.70	1323.51
13	19.3	16.75	1.56	-36.08	1777.68
14	27.0	24.50	1.56	-39.42	2680.79
15	19.8	17.31	1.56	-41.81	1884.92
16	15.4	12.94	1.56	-41.27	1380.93
17	12.9	10.38	1.56	-40.58	1085.24
18	12.0	9.50	1.56	-40.37	984.78
19	12.0	9.50	1.06	-40.80	758.06
20	12.0	9.50	1.06	-41.33	760.37

AASHTO 12.10.4.2.4a

g = 0.85 b f'c = 61

$$\phi M_n = \frac{1}{2}\left[g(\phi_f d)^2 - Nu(2\phi_f d - h) - \frac{(g\phi_f d - N_u - A_s F_y)^2}{g} \right]$$

Des. By: RJA Chk. By: GSC

DELTA
ENGINEERS, ARCHITECTS, & LAND SURVEYORS
860 Hooper Road, Endwell, NY 13760
www.deltaengineers.com
Phone: (607) 231-6600
Fax: (607) 231-6650

JOB	2016.059.009
DESCRIPTION	28x8 under 8: 4A Case 2
SHEET NO.	OF
SCALE	
CALCULATED BY	
DATE	
CHECKED BY	
DATE	

LRFR LOAD RATING - 4A Case 2

Node Number	thk (in)	d (in)	Phi Mn (in-k/ft)	Mu_D (in-k/ft)	$+Mu_{LL}$ (in-k/ft)	Inventory Rating	Operating Rating
1	10.0	8.00	514.51	275.22	46.16	5.18	6.72
2	10.0	8.00	515.46	270.08	45.37	5.41	7.01
3	10.0	8.00	516.83	253.74	42.79	6.15	7.97
4	10.0	8.00	519.03	225.56	38.06	7.71	9.99
5	10.0	8.00	521.87	184.46	30.89	10.92	14.16
6	10.0	8.00	525.15	129.08	20.95	18.90	24.50
7	10.0	8.00	528.82	57.57	8.08	58.30	75.57
8	10.1	7.56	242.51	-32.02	-7.78	27.05	35.06
9	10.1	7.56	562.08	-141.89	-26.57	15.82	20.50
10	10.7	8.19	615.99	-274.38	-47.98	7.12	9.23
11	12.4	9.88	999.14	-431.26	-71.76	7.91	10.26
12	15.3	12.75	1323.51	-613.57	-97.54	7.28	9.44
13	19.3	16.75	1777.68	-822.16	-124.90	7.65	9.92
14	27.0	24.50	2680.79	-1058.99	-153.37	10.57	13.71
15	19.8	17.31	1884.92	-930.06	-134.45	7.10	9.21
16	15.4	12.94	1380.93	-787.22	-113.29	5.24	6.79
17	12.9	10.38	1085.24	-630.60	-90.29	5.04	6.53
18	12.0	9.50	984.78	-461.04	-65.92	7.95	10.30
19	12.0	9.50	758.06	-225.56	-32.57	16.35	21.19
20	12.0	9.50	760.37	0.00	0.00	N/A	N/A
					Controlling	**5.04**	**6.53**

g = 0.85 b f'c = 61

$$\phi M_n = \frac{1}{2}\left[g(\phi_f d)^2 - Nu(2\phi_f d - h) - \frac{(g\phi_f d - N_u - A_s F_y)^2}{g} \right]$$

Des. By: RJA Chk. By: GSC

DELTA ENGINEERS
184 Court Street
BINGHAMTON, NEW YORK 13901
(607) 231-6600 Fax 231-6650

JOB	2016.059.009
DESCRIPTION	28x8 under 8: 4A Case 2
SHEET NO.	OF
SCALE	
CALCULATED BY	
DATE	
CHECKED BY	
DATE	

LRFR LOAD RATING - 4A Case 2

Elmt Nmbr	thk (in)	d (in)	As (prov'd) (in^2 / ft)	Vtotal (kip/ft)	Vdl only (kip/ft)	Vll only (kip/ft)	Vn=Vc+Vs ϕVn (kip/ft)	1.75 INV	1.35 OPR
1	10.0	8.000	0.92	0.04	0.03	0.01	12.81	1364	1769
2	10.0	8.000	0.92	0.93	0.80	0.13	12.82	95.65	124
3	10.0	8.000	0.92	1.93	1.66	0.27	12.84	41.09	53.27
4	10.0	8.000	0.92	3.02	2.58	0.44	12.86	23.22	30.09
5	10.0	8.000	0.92	4.23	3.59	0.64	12.90	14.61	18.94
6	10.0	8.000	0.92	5.57	4.72	0.85	13.82	10.72	13.89
7	10.0	8.000	0.92	7.07	6.00	1.07	31.32	23.67	30.69
8	10.1	7.563	0.24	8.72	7.43	1.29	29.61	17.2	22.3
9	10.1	7.563	1.06	10.52	9.02	1.50	21.38	8.26	10.71
10	10.7	8.188	1.06	12.46	10.77	1.68	15.42	2.762	3.581
11	12.4	9.875	1.56	14.47	12.63	1.85	18.26	3.051	3.956
12	15.3	12.750	1.56	16.53	14.55	1.98	20.33	2.919	3.785
13	19.3	16.750	1.56	18.66	16.58	2.08	24.18	3.655	4.738
14	27.0	24.500	1.56	1.95	1.91	0.05	30.19	622	806.2
15	19.8	17.313	1.56	16.72	14.57	2.15	24.21	4.487	5.816
16	15.4	12.938	1.56	18.42	16.06	2.37	20.80	2.004	2.598
17	12.9	10.375	1.56	20.03	17.49	2.54	47.62	11.87	15.38
18	12.0	9.500	1.56	20.38	17.83	2.54	47.79	11.77	15.26
19	12.0	9.500	1.06	19.56	17.11	2.45	57.03	16.32	21.15
20	12.0	9.500	1.06	18.77	16.38	2.39	66.13	20.84	27.01
							controling:	**2.004**	**2.598**

$$F_d = 0.8 + \frac{1.6}{d} \le 1.3$$

$$F_n = 1 + \frac{N_u}{24 * thk}$$

$$\rho = \frac{A_s}{\phi b d} \le 0.02$$

$$\phi V_n = \phi 0.0316 b d F_{vp} \sqrt{f'c}\left(1.1 + 63\rho\right)\left(\frac{F_d F_n}{F_c}\right)$$

$$F_c = 1 \pm \left(\frac{d}{2 * rad}\right)$$

Shear Resistance With Stirrups **AASHTO 12.10.4.2.5**

Des. By: RJA Chk. By: GSC

DELTA ENGINEERS
184 Court Street
BINGHAMTON, NEW YORK 13901
(607) 231-6600 Fax 231-6650

JOB	2016.059.009		
DESCRIPTION	28x8 under 8: 4A Case 2		
SHEET NO	OF	SCALE	0
CALCULATED BY		DATE	
CHECKED BY		DATE	

Arch Design

Positive Moment Design (cont.)

Shear Resistance With Radial Stirrups **AASHTO 12.10.4.2.6**

Element Number	thk (in)	d (in)	Sv MAX (in)	Sv Act (in)	Avr (in^2 / ft)	Sv MAX (in)	Sv Act (in)	Avs (in^2 / ft)	ϕVs (k/ft)
1	10.0	8.13	5.48	0.00	0.00	5.48	0.00	0.00	0
2	10.0	8.13	5.48	0.00	0.00	5.48	0.00	0.00	0
3	10.0	8.13	5.48	0.00	0.00	5.48	0.00	0.00	0
4	10.0	8.13	5.48	0.00	0.00	5.48	0.00	0.00	0
5	10.0	8.13	5.48	0.00	0.00	5.48	0.00	0.00	0
6	10.0	8.13	5.48	0.00	0.00	5.48	0.00	0.00	0
7	10.0	8.13	5.48	0.00	0.00	5.48	0.00	0.00	0
8	10.1	7.69	5.19	0.00	0.00	5.19	0.00	0.00	0
9	10.1	7.69	5.19	0.00	0.00	5.19	0.00	0.00	0
10	10.7	8.31	5.61	0.00	0.00	5.61	0.00	0.00	0
11	12.4	10.00	6.75	0.00	0.00	6.75	0.00	0.00	0
12	15.3	12.88	8.69	0.00	0.00	8.69	0.00	0.00	0
13	19.3	16.88	11.39	0.00	0.00	11.39	0.00	0.00	0
14	27.0	24.63	16.62	0.00	0.00	16.62	0.00	0.00	0
15	19.8	17.44	11.77	0.00	0.00	11.77	0.00	0.00	0
16	15.4	13.06	8.82	0.00	0.00	8.82	0.00	0.00	0
17	12.9	10.50	7.09	4.50	0.01	7.09	4.50	0.04	28.64
18	12.0	9.63	6.50	4.50	0.01	6.50	4.50	0.05	26.52
19	12.0	9.63	6.50	4.50	0.00	6.50	4.50	0.04	27.11
20	12.0	9.63	6.50	4.50	0.00	6.50	4.50	0.02	26.98

For Radial Tension

$$A_{vr} = \frac{1.1 s_v \left(M_u - 0.45 N_u \phi_r d\right)}{f_y r_s \phi_r d}$$

$$s_v \le 0.75 \phi_r d$$

For Shear

$$A_{vs} = \frac{1.1 s_v}{f_y \phi_v d}\left(V_u F_c - V_c\right) + A_{vr}$$

$$V_c = \frac{4V_r}{\frac{M_{nu}}{V_u d} + 1} \le 0.0633 \phi_v b d \sqrt{f'_c}$$

Mnu=Mu-Nu(4h-d)/8

rearanging Avs equation above and

taking Fc =1.0, Vs = (Avs-Avr)*Fys*ϕv*d/(1.1*Sv) (<8*√F'c*Bw*d)

(#3@4.5")

As provided = 0.293 sq.in. / L.F.

Des. By: RJA Chk. By: GSC

ENGINEERS, ARCHITECTS, & LAND SURVEYORS
860 Hooper Road, Endwell, NY 13760
www.deltaengineers.com
Phone: (607) 231-6600
Fax: (607) 231-6650

JOB	2016.059.009		
DESCIPTION	28x8u8.6		
SHEET NO.	OF	SCALE	
CALCULATED BY		DATE	
CHECKED BY		DATE	

span 28 ft

leg thickness 12 inches traffic parallel with main reinforcement

5A TRUCK

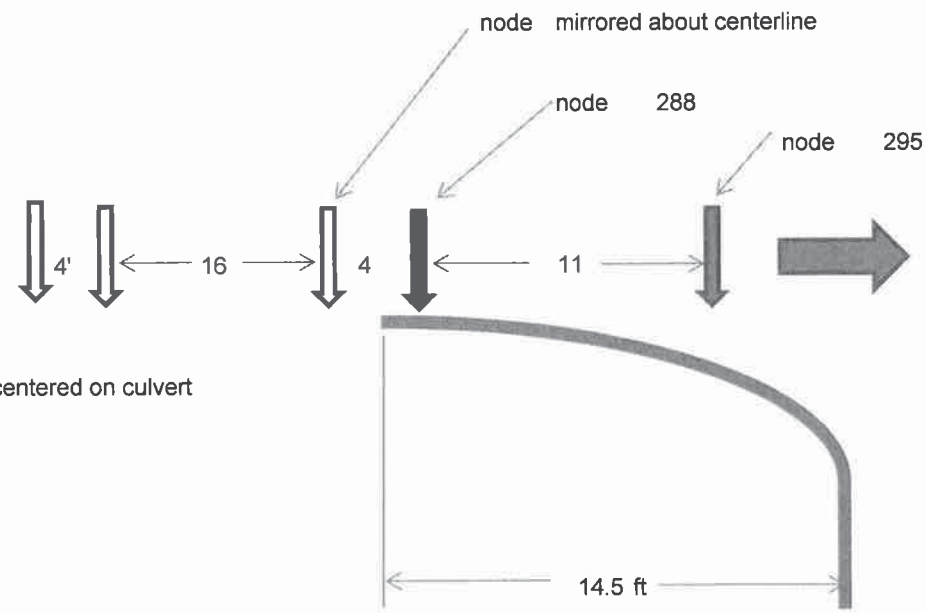

case 1

center axle group centered on culvert

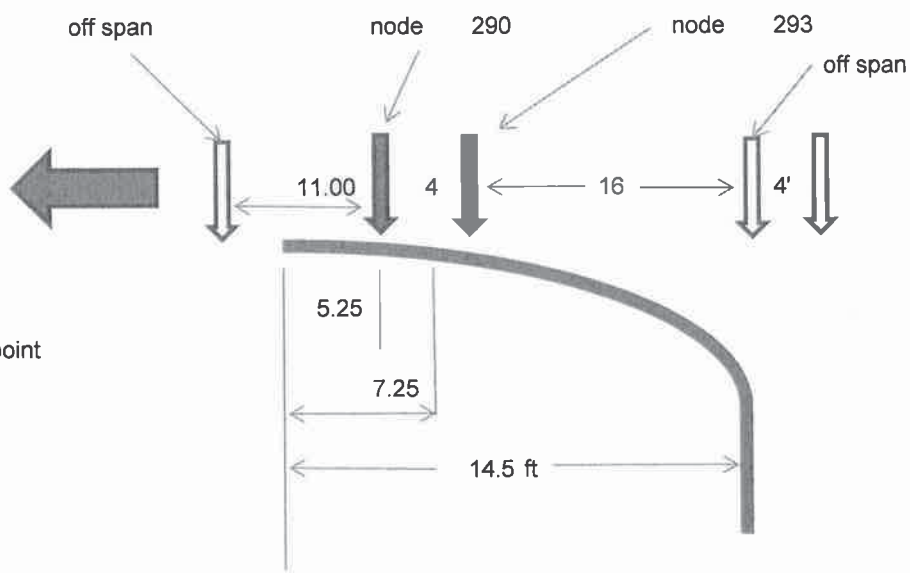

case 2

center axle group at quarter point

Des. By: RJA Chk. By: GSC

DELTA
ENGINEERS, ARCHITECTS, & LAND SURVEYORS
860 Hooper Road, Endwell, NY 13760
www.deltaengineers.com
Phone: (607) 231-6600
Fax: (607) 231-6650

JOB	2016.059.009		
DESCIPTION	28x8u8.6		
SHEET NO.	OF	SCALE	
CALCULATED BY	rja	DATE	7/28/2016
CHECKED BY		DATE	

5A truck 8.6 ft earth cover (controls)

Load Case	Description	
1	5A	truck at center
2	5A	truck at quarter point

Boundary conditions

Case 1			Case 2		
node	step	force	node	step	force
288	12	-20.20	293	12	-20.20
288	13	-20.20	293	13	-20.20
288	14	-20.20	293	14	-20.20
288	15	-20.20	293	15	-20.20
295	12	-20.20	290	12	-20.20
295	13	-20.20	290	13	-20.20
295	14	-20.20	290	14	-20.20
295	12	-20.20	290	12	-20.20
296	13	0.00	297	13	0.00
296	14	0.00	297	14	0.00
296	15	0.00	297	15	0.00
296	15	0.00	297	15	0.00

capacity demand ratio

	Case 1		Case 2		
failure mode	node	ratio	node	ratio	
steel yeilding	17	0.748	17	0.754	
concrete crushing	17	0.764	17	0.768	Controls
shear failure	17	0.999	17	1.006	
radial tension failure	1	0.110	1	0.109	

Des. By: RJA Chk. By: GSC

```
*** WELCOME TO CANDE-2013(version 3/1/2013) ***

USER TITLE: 28x8_u8.6_5A_c1

* * * BOUNDARY CONDITIONS * * *
 (FORCES = LBS; DISPLACEMENTS = INCHES; ROTATIONS = DEGREES)

  BOUNDARY      LOAD      X-FORCE     OR      Y-FORCE     OR      X-Y ROTATION
BEAM ROTATIONAL
     NODE       STEP      X-DISPLACEMENT      Y-DISPLACEMENT
BOUNDARY CONDITIONS

      288        12    F =   0.0000E+00    F =  -0.2020E+02      0.0000E+00
     F
      288        13    F =   0.0000E+00    F =  -0.2020E+02      0.0000E+00
     F
      288        14    F =   0.0000E+00    F =  -0.2020E+02      0.0000E+00
     F
      288        15    F =   0.0000E+00    F =  -0.2020E+02      0.0000E+00
     F
      295        12    F =   0.0000E+00    F =  -0.2020E+02      0.0000E+00
     F
      295        13    F =   0.0000E+00    F =  -0.2020E+02      0.0000E+00
     F
      295        14    F =   0.0000E+00    F =  -0.2020E+02      0.0000E+00
     F
      295        12    F =   0.0000E+00    F =  -0.2020E+02      0.0000E+00
     F
      296        13    F =   0.0000E+00    F =   0.0000E+00      0.0000E+00
     F
      296        14    F =   0.0000E+00    F =   0.0000E+00      0.0000E+00
     F
      296        15    F =   0.0000E+00    F =   0.0000E+00      0.0000E+00
     F
      296        15    F =   0.0000E+00    F =   0.0000E+00      0.0000E+00
     F
      287        15    F =   0.0000E+00    F =   0.0000E+00      0.0000E+00
     F
      288        15    F =   0.0000E+00    F =   0.0000E+00      0.0000E+00
     F
      289        15    F =   0.0000E+00    F =   0.0000E+00      0.0000E+00
     F
      290        15    F =   0.0000E+00    F =   0.0000E+00      0.0000E+00
     F
      291        15    F =   0.0000E+00    F =   0.0000E+00      0.0000E+00
     F
      292        15    F =   0.0000E+00    F =   0.0000E+00      0.0000E+00
     F
      293        15    F =   0.0000E+00    F =   0.0000E+00      0.0000E+00
     F
      294        15    F =   0.0000E+00    F =   0.0000E+00      0.0000E+00
     F
      295        15    F =   0.0000E+00    F =   0.0000E+00      0.0000E+00
     F
      296        15    F =   0.0000E+00    F =   0.0000E+00      0.0000E+00
     F

 LRFD TOTAL LOAD FACTORS PER LOAD STEP

              LOAD STEP       LOAD FACTOR       USER COMMENT

                     1           1.313        Factor for load step #1
```

2	0.857	Factor for load step #2
3	0.857	Factor for load step #3
4	0.857	Factor for load step #4
5	1.365	Factor for load step #5
6	1.365	Factor for load step #6
7	1.365	Factor for load step #7
8	1.365	Factor for load step #8
9	1.365	Factor for load step #9
10	1.365	Factor for load step #10
11	1.365	Factor for load step #11
12	1.350	Factor for load step #12
13	1.350	Factor for load step #13
14	1.350	Factor for load step #14
15	1.350	Factor for load step #15

+ +

FINITE ELEMENT OUTPUT FOR LOAD STEP 15

+ +

CONCRETE, FACTORED-EVALUATION FOR GROUP 1, LOAD-STEP 15

STRUCTURAL RESPONSES OF CONCRETE-GROUP 1, LOAD-STEP 15
COORDINATES, DISPLACEMENTS AND CRACK DEPTHS ARE INCHES
Y-BAR IS "NEUTRAL AXIS" LOCATION FROM INTERIOR, INCHES
PRESSURES ARE LB/IN**2
MOMENTS ARE IN-LB/IN
THRUST AND SHEAR ARE LB/IN

LOCAL NODE	X-COORD. Y-COORD.	X-DISP. Y-DISP.	N-PRES. S-PRES.	MOMENT THRUST	Y-BAR CRACK DEPTH
1	0.00 101.00	0.00000E+00 -0.22104E+01	-0.96217E+01 -0.19441E+00	0.25271E+05 -0.19556E+04	0.73190E+01 0.69887E+01
2	13.43 100.76	-0.89752E-03 -0.21877E+01	-0.99149E+01 -0.14420E+01	0.24776E+05 -0.19779E+04	0.73190E+01 0.69772E+01
3	26.84 100.08	0.11924E-02 -0.21209E+01	-0.10208E+02 -0.26896E+01	0.23215E+05 -0.20101E+04	0.73556E+01 0.69460E+01
4	40.22 98.95	0.89346E-02 -0.20128E+01	-0.10768E+02 -0.37578E+01	0.20548E+05 -0.20610E+04	0.74181E+01 0.68738E+01
5	53.56 97.38	0.24474E-01 -0.18689E+01	-0.11499E+02 -0.41993E+01	0.16699E+05 -0.21253E+04	0.74181E+01 0.67317E+01
6	66.84 95.38	0.49100E-01 -0.16970E+01	-0.12534E+02 -0.44956E+01	0.11564E+05 -0.21982E+04	0.74181E+01 0.63509E+01

7	80.05	0.82603E-01	-0.13643E+02	0.49919E+04	0.50615E+01
	92.93	-0.15116E+01	-0.46660E+01	-0.22782E+04	0.54695E+00
8	93.16	0.12285E+00	-0.14900E+02	-0.31831E+04	0.20283E+01
	90.05	-0.13240E+01	-0.48404E+01	-0.23648E+04	0.68186E+01
9	106.18	0.16635E+00	-0.16217E+02	-0.13149E+05	0.25648E+01
	86.73	-0.11465E+01	-0.46036E+01	-0.24558E+04	0.65970E+01
10	119.08	0.20813E+00	-0.17187E+02	-0.25103E+05	0.28493E+01
	82.99	-0.99708E+00	-0.42693E+01	-0.25484E+04	0.73486E+01
11	131.84	0.24476E+00	-0.17771E+02	-0.39190E+05	0.34229E+01
	78.82	-0.88021E+00	-0.40447E+01	-0.26433E+04	0.82874E+01
12	144.47	0.27535E+00	-0.18114E+02	-0.55493E+05	0.40506E+01
	74.23	-0.79245E+00	-0.39472E+01	-0.27428E+04	0.10457E+02
13	156.93	0.30049E+00	-0.18917E+02	-0.74076E+05	0.44678E+01
	69.23	-0.72691E+00	-0.38559E+01	-0.28488E+04	0.13523E+02
14	169.22	0.32149E+00	-0.23186E+02	-0.95093E+05	0.55838E+01
	63.82	-0.67670E+00	-0.17856E+02	-0.31197E+04	0.19540E+02
15	171.39	0.35097E+00	-0.10301E+02	-0.83507E+05	0.49926E+01
	54.75	-0.66883E+00	-0.45823E+01	-0.33190E+04	0.13868E+02
16	172.91	0.37279E+00	-0.10367E+02	-0.70663E+05	0.42445E+01
	45.55	-0.66435E+00	-0.45121E+01	-0.32790E+04	0.10632E+02
17	173.78	0.38169E+00	-0.11192E+02	-0.56584E+05	0.36636E+01
	36.26	-0.66248E+00	-0.47581E+01	-0.32278E+04	0.87140E+01
18	174.00	0.37384E+00	-0.12178E+02	-0.41362E+05	0.34579E+01
	26.94	-0.66155E+00	-0.48222E+01	-0.32148E+04	0.79461E+01
19	174.00	0.33423E+00	-0.47926E+01	-0.20246E+05	0.30043E+01
	13.47	-0.65984E+00	-0.22307E+01	-0.32517E+04	0.78404E+01
20	174.00	0.27902E+00	0.25925E+01	0.16939E-09	0.60775E+01
	0.00	-0.65882E+00	0.36091E+00	-0.32957E+04	0.00000E+00

SHEAR FORCE DIAGNOSTCS FOR CONCRETE-GROUP 1, LOAD STEP 15
-- V-factor is coefficient of sqrt(PFPC) equal to capacity.
-- Shear depth "d" is negative if measured from outer wall.
-- Stirrup load is excess shear force above capacity.

NODE	EQUIVALENT V-factor	SHEAR CAPACITY lbs/inch	APPLIED SHEAR lbs/inch	APPLIED/ CAPACITY ratio	SHEAR DEPTH-d inches	STIRRUP LOAD lbs/inch
1	1.83	1180.19	-2.83	0.002	8.00	0.00
2	1.83	1181.39	76.57	0.065	8.00	0.00
3	1.83	1183.12	157.41	0.133	8.00	0.00
4	1.84	1185.86	242.57	0.205	8.00	0.00
5	1.84	1189.32	334.47	0.281	8.00	0.00
6	2.01	1294.82	435.84	0.337	8.00	0.00
7	4.50	2900.32	549.03	0.189	8.00	0.00
8	4.50	2741.89	675.40	0.246	-7.56	0.00
9	3.23	1968.49	816.08	0.415	-7.56	0.00
10	2.15	1422.45	969.50	0.682	-8.19	0.00
11	2.11	1682.10	1131.42	0.673	-9.88	0.00

12	1.82	1874.00	1298.78	0.693	-12.75	0.00
13	1.66	2247.81	1474.33	0.656	-16.75	0.00
14	1.41	2787.49	161.37	0.058	-24.50	0.00
15	1.60	2233.17	-1309.72	0.586	-17.31	0.00
16	1.84	1916.97	-1443.43	0.753	-12.94	0.00
17	2.09	1747.97	-1570.95	0.899	-10.38	0.00
18	2.56	1961.72	-1599.90	0.816	-9.50	0.00
19	3.61	2762.27	-1535.32	0.556	-9.50	0.00
20	4.50	3625.40	-1470.76	0.406	10.00	0.00

ASSESSMENT SUMMARY CONCRETE-GROUP 1, LOAD-STEP 15

LRFD SUMMARY EVALUATION FOR GROUP 1, LOAD STEP 15

DESIGN-CRITERION	CONTROL NODE	FACTORED DEMAND	FACTORED CAPACITY	RATIO VALUE
STEEL YIELDING (psi)	17	42650.0	57000.0	0.748
CONCRETE CRUSHING (psi)	17	3726.9	4875.0	0.764
SHEAR FAILURE (lbs/in)	17	1570.9	1573.2	0.999
RADIAL-TENSION FAIL (psi)	1	7.7	69.6	0.110

LRFD SERVICE-LOAD PERFORMANCE MEASURES FOR GROUP 1, LOAD STEP 15

NODE NUMBER FOR MAXIMUM CRACK WIDTH 17

MAXIMUM CRACK WIDTH AT SERVICE LOAD (inches) 0.00713

LRFD RATIO: MAX-CRACK-WIDTH / ALLOWABLE 0.71

SPAN LENGTH FOR AUXILIARY EQUATIONS (inches)..... 348.00

* * * * NORMAL EXIT FROM CANDE * * * *

*** WELCOME TO CANDE-2013(version 3/1/2013) ***

USER TITLE: 28x8_u8.6_5A_c2

* * * BOUNDARY CONDITIONS * * *
(FORCES = LBS; DISPLACEMENTS = INCHES; ROTATIONS = DEGREES)

BOUNDARY NODE	LOAD STEP	X-FORCE OR X-DISPLACEMENT	Y-FORCE OR Y-DISPLACEMENT	X-Y ROTATION BEAM ROTATIONAL BOUNDARY CONDITIONS
293	12	F = 0.0000E+00	F = -0.2020E+02	0.0000E+00 F
293	13	F = 0.0000E+00	F = -0.2020E+02	0.0000E+00 F
293	14	F = 0.0000E+00	F = -0.2020E+02	0.0000E+00 F
293	15	F = 0.0000E+00	F = -0.2020E+02	0.0000E+00 F
290	12	F = 0.0000E+00	F = -0.2020E+02	0.0000E+00 F
290	13	F = 0.0000E+00	F = -0.2020E+02	0.0000E+00 F
290	14	F = 0.0000E+00	F = -0.2020E+02	0.0000E+00 F
290	12	F = 0.0000E+00	F = -0.2020E+02	0.0000E+00 F
297	13	F = 0.0000E+00	F = 0.0000E+00	0.0000E+00 F
297	14	F = 0.0000E+00	F = 0.0000E+00	0.0000E+00 F
297	15	F = 0.0000E+00	F = 0.0000E+00	0.0000E+00 F
297	15	F = 0.0000E+00	F = 0.0000E+00	0.0000E+00 F
287	15	F = 0.0000E+00	F = 0.0000E+00	0.0000E+00 F
288	15	F = 0.0000E+00	F = 0.0000E+00	0.0000E+00 F
289	15	F = 0.0000E+00	F = 0.0000E+00	0.0000E+00 F
290	15	F = 0.0000E+00	F = 0.0000E+00	0.0000E+00 F
291	15	F = 0.0000E+00	F = 0.0000E+00	0.0000E+00 F
292	15	F = 0.0000E+00	F = 0.0000E+00	0.0000E+00 F
293	15	F = 0.0000E+00	F = 0.0000E+00	0.0000E+00 F
294	15	F = 0.0000E+00	F = 0.0000E+00	0.0000E+00 F
295	15	F = 0.0000E+00	F = 0.0000E+00	0.0000E+00 F
296	15	F = 0.0000E+00	F = 0.0000E+00	0.0000E+00 F

LRFD TOTAL LOAD FACTORS PER LOAD STEP

LOAD STEP	LOAD FACTOR	USER COMMENT
1	1.313	Factor for load step #1

2	0.857	Factor for load step #2
3	0.857	Factor for load step #3
4	0.857	Factor for load step #4
5	1.365	Factor for load step #5
6	1.365	Factor for load step #6
7	1.365	Factor for load step #7
8	1.365	Factor for load step #8
9	1.365	Factor for load step #9
10	1.365	Factor for load step #10
11	1.365	Factor for load step #11
12	1.350	Factor for load step #12
13	1.350	Factor for load step #13
14	1.350	Factor for load step #14
15	1.350	Factor for load step #15

+

FINITE ELEMENT OUTPUT FOR LOAD STEP 15

+

CONCRETE, FACTORED-EVALUATION FOR GROUP 1, LOAD-STEP 15

STRUCTURAL RESPONSES OF CONCRETE-GROUP 1, LOAD-STEP 15
COORDINATES, DISPLACEMENTS AND CRACK DEPTHS ARE INCHES
Y-BAR IS "NEUTRAL AXIS" LOCATION FROM INTERIOR, INCHES
PRESSURES ARE LB/IN**2
MOMENTS ARE IN-LB/IN
THRUST AND SHEAR ARE LB/IN

LOCAL NODE	X-COORD. Y-COORD.	X-DISP. Y-DISP.	N-PRES. S-PRES.	MOMENT THRUST	Y-BAR CRACK DEPTH
1	0.00 101.00	0.00000E+00 -0.22142E+01	-0.90239E+01 -0.14586E+00	0.24999E+05 -0.19743E+04	0.73190E+01 0.69811E+01
2	13.43 100.76	-0.91395E-03 -0.21918E+01	-0.95355E+01 -0.12725E+01	0.24549E+05 -0.19941E+04	0.73190E+01 0.69705E+01
3	26.84 100.08	0.11328E-02 -0.21256E+01	-0.10047E+02 -0.23990E+01	0.23109E+05 -0.20230E+04	0.73190E+01 0.69414E+01
4	40.22 98.95	0.87976E-02 -0.20184E+01	-0.10838E+02 -0.34407E+01	0.20598E+05 -0.20694E+04	0.74181E+01 0.68731E+01
5	53.56 97.38	0.24245E-01 -0.18752E+01	-0.11763E+02 -0.39451E+01	0.16896E+05 -0.21296E+04	0.74181E+01 0.67384E+01
6	66.84	0.48808E-01	-0.12913E+02	0.11862E+05	0.74181E+01

	95.38	-0.17037E+01	-0.43545E+01	-0.21996E+04	0.63782E+01
7	80.05	0.82301E-01	-0.14055E+02	0.53231E+04	0.50615E+01
	92.93	-0.15184E+01	-0.46569E+01	-0.22785E+04	0.84118E+00
8	93.16	0.12259E+00	-0.15272E+02	-0.28928E+04	0.20283E+01
	90.05	-0.13306E+01	-0.49472E+01	-0.23658E+04	0.67160E+01
9	106.18	0.16625E+00	-0.16495E+02	-0.12967E+05	0.25648E+01
	86.73	-0.11524E+01	-0.48001E+01	-0.24591E+04	0.65832E+01
10	119.08	0.20832E+00	-0.17374E+02	-0.25077E+05	0.28493E+01
	82.99	-0.10020E+01	-0.45164E+01	-0.25551E+04	0.73466E+01
11	131.84	0.24530E+00	-0.17875E+02	-0.39351E+05	0.34229E+01
	78.82	-0.88407E+00	-0.43102E+01	-0.26539E+04	0.82877E+01
12	144.47	0.27622E+00	-0.18110E+02	-0.55855E+05	0.40506E+01
	74.23	-0.79537E+00	-0.41725E+01	-0.27571E+04	0.10459E+02
13	156.93	0.30167E+00	-0.18810E+02	-0.74632E+05	0.44678E+01
	69.23	-0.72904E+00	-0.40042E+01	-0.28662E+04	0.13526E+02
14	169.22	0.32296E+00	-0.22949E+02	-0.95816E+05	0.55838E+01
	63.82	-0.67815E+00	-0.17746E+02	-0.31383E+04	0.19545E+02
15	171.39	0.35288E+00	-0.10266E+02	-0.84147E+05	0.45538E+01
	54.75	-0.67017E+00	-0.45422E+01	-0.33372E+04	0.13910E+02
16	172.91	0.37508E+00	-0.10384E+02	-0.71206E+05	0.42445E+01
	45.55	-0.66562E+00	-0.44890E+01	-0.32960E+04	0.10633E+02
17	173.78	0.38426E+00	-0.11256E+02	-0.57019E+05	0.36636E+01
	36.26	-0.66372E+00	-0.47285E+01	-0.32438E+04	0.87152E+01
18	174.00	0.37655E+00	-0.12240E+02	-0.41683E+05	0.34579E+01
	26.94	-0.66277E+00	-0.47193E+01	-0.32296E+04	0.79478E+01
19	174.00	0.33693E+00	-0.47599E+01	-0.20410E+05	0.30043E+01
	13.47	-0.66106E+00	-0.22300E+01	-0.32657E+04	0.78451E+01
20	174.00	0.28158E+00	0.27202E+01	-0.15689E-10	0.60775E+01
	0.00	-0.66003E+00	0.25928E+00	-0.33098E+04	0.00000E+00

SHEAR FORCE DIAGNOSTCS FOR CONCRETE-GROUP 1, LOAD STEP 15
-- V-factor is coefficient of sqrt(PFPC) equal to capacity.
-- Shear depth "d" is negative if measured from outer wall.
-- Stirrup load is excess shear force above capacity.

NODE	EQUIVALENT V-factor	SHEAR CAPACITY lbs/inch	APPLIED SHEAR lbs/inch	APPLIED/ CAPACITY ratio	SHEAR DEPTH-d inches	STIRRUP LOAD lbs/inch
1	1.83	1181.20	-3.39	0.003	8.00	0.00
2	1.83	1182.26	70.37	0.060	8.00	0.00
3	1.84	1183.81	147.10	0.124	8.00	0.00
4	1.84	1186.31	231.31	0.195	8.00	0.00
5	1.84	1189.55	325.23	0.273	8.00	0.00
6	1.95	1254.99	430.83	0.343	8.00	0.00
7	4.39	2829.72	549.31	0.194	8.00	0.00
8	4.50	2741.89	680.92	0.248	-7.56	0.00
9	3.29	2006.37	825.90	0.412	-7.56	0.00
10	2.18	1438.25	982.28	0.683	-8.19	0.00

11	2.11	1682.75	1145.88	0.681	-9.88	0.00
12	1.82	1874.81	1313.50	0.701	-12.75	0.00
13	1.67	2251.31	1487.78	0.661	-16.75	0.00
14	1.41	2788.39	163.14	0.059	-24.50	0.00
15	1.60	2234.12	-1319.43	0.591	-17.31	0.00
16	1.84	1917.93	-1454.46	0.758	-12.94	0.00
17	2.09	1748.94	-1582.77	0.905	-10.38	0.00
18	2.56	1961.84	-1611.81	0.822	-9.50	0.00
19	3.61	2761.87	-1547.26	0.560	-9.50	0.00
20	4.50	3444.13	-1483.15	0.431	-9.50	0.00

ASSESSMENT SUMMARY CONCRETE-GROUP 1, LOAD-STEP 15

LRFD SUMMARY EVALUATION FOR GROUP 1, LOAD STEP 15

DESIGN-CRITERION	CONTROL NODE	FACTORED DEMAND	FACTORED CAPACITY	RATIO VALUE
STEEL YIELDING (psi)	17	42995.4	57000.0	0.754
CONCRETE CRUSHING (psi)	17	3743.8	4875.0	0.768
SHEAR FAILURE (lbs/in)	17	1582.8	1574.0	1.006
RADIAL-TENSION FAIL (psi)	1	7.6	69.6	0.109

LRFD SERVICE-LOAD PERFORMANCE MEASURES FOR GROUP 1, LOAD STEP 15

NODE NUMBER FOR MAXIMUM CRACK WIDTH 17

MAXIMUM CRACK WIDTH AT SERVICE LOAD (inches) 0.00728

LRFD RATIO: MAX-CRACK-WIDTH / ALLOWABLE 0.73

SPAN LENGTH FOR AUXILIARY EQUATIONS (inches)..... 348.00

* * * * NORMAL EXIT FROM CANDE * * * *

DELTA
ENGINEERS, ARCHITECTS, & LAND SURVEYORS
860 Hooper Road, Endwell, NY 13760
www.deltaengineers.com
Phone: (607) 231-6600
Fax: (607) 231-6650

JOB	2016.059.009
DESCRIPTION	28x8 under 8 5A Case 2
SHEET NO	OF
SCALE	
CALCULATED BY	
DATE	
CHECKED BY	
DATE	

LRFR LOAD RATING - 5A Case 2

Technical Data & Load Factors

Culvert Span (S) =	29.00 ft.	(C to C)	
Crown Radius (Rad) =	33.83 ft.		
Bar Cover			
Outside Face (Cov_{out}) =	2.00 in		
Inside Face (Cov_{in}) =	1.50 in		
Design Section Length (b) =	12 in		
Compressive Strength (f_c) =	6.5 ksi		
Yield Strength (f_y) =	60 ksi		
Stirrup Yield Strength (f_{ystir}) =	60 ksi		
Circumferential Reinforcement Spa. (spa.) =	5.00 in		
Circumferential Reinforcement Provided (n) =	1	(n=1 for 1 layer, n=2 for multiple layers)	AASHTO
Reinforcement Type (Type) =	3	AASHTO Table	12.10.4.2.4d
1 - smooth wire or plain bar		12.10.4.4d-1	
2 - WWF (8" max spa. Smooth)			
3 - WWF (deformed) or bar (deformed)			

Resistance Factors:

ϕf - Flexure =	1.00	AASHTO Table 12.5.5-1
ϕr - Radial Tension =	0.90	
ϕv - Diag Tension =	0.90	
Radial Tension Process (F_{rp}) =	1.00	AASHTO 12.10.4.2.3
Diag Tension Process (F_{vp}) =	1.00	

Load Factors:

	IR	OR	
LL Factor	1.75	1.35	load modification factors already applied to magnitude
γ_pDC (component)	1.31	(1.25*1.05)	
γ_pEH (hor. At rest earth pressure)	0.86	(0.9/1.05)	
γ_pEV	1.37	(1.3*1.05)	
State Trucks		1.45	(ADTT = 280)

Des. By: RJA Chk. By: GSC

DELTA
ENGINEERS, ARCHITECTS, & LAND SURVEYORS
860 Hooper Road, Endwell, NY 13760
www.deltaengineers.com
Phone: (607) 231-6600
Fax: (607) 231-6650

JOB	2016.059.009		
DESCRIPTION	28x8 under 8 5A Case 2		
SHEET NO.		OF	
CALCULATED BY		DATE	
CHECKED BY		DATE	

Design Force Summary

	Factored DC+EV+EH			Max Factored Total Load			Max Factored LL			
Node Number	Factored Thrust Nu (k/ft)	Factored Moment Mu (k-in/ft)	Factored Shear Vu (k/ft)	Factored Thrust Nu (k/ft)	Factored Moment Mu (k-in/ft)	Factored Shear Vu (k/ft)	Factored Thrust Nu (k/ft)	Factored Moment Mu (k-in/ft)	Factored Shear Vu (k/ft)	Thk at node (in)
1	-22.14	275.22	-0.03	-23.51	298.60	-0.04	-1.38	23.38	-0.01	10.000
2	-22.37	270.08	0.80	-23.75	293.16	0.85	-1.39	23.08	0.05	10.000
3	-22.70	253.74	1.66	-24.10	275.80	1.77	-1.40	22.06	0.11	10.000
4	-23.24	225.56	2.58	-24.66	245.58	2.78	-1.42	20.02	0.20	10.000
5	-23.93	184.46	3.59	-25.39	201.14	3.90	-1.46	16.68	0.31	10.000
6	-24.72	129.08	4.72	-26.23	140.89	5.15	-1.51	11.81	0.43	10.000
7	-25.60	57.57	6.00	-27.18	62.77	6.56	-1.58	5.20	0.56	10.000
8	-26.56	-32.02	7.43	-28.23	-35.21	8.12	-1.66	-3.19	0.69	10.063
9	-27.58	-141.89	9.02	-29.34	-155.20	9.83	-1.76	-13.31	0.81	10.063
10	-28.61	-274.38	10.77	-30.48	-299.35	11.69	-1.87	-24.97	0.92	10.688
11	-29.66	-431.26	12.63	-31.65	-469.19	13.63	-1.99	-37.93	1.01	12.375
12	-30.77	-613.57	14.55	-32.87	-665.53	15.63	-2.10	-51.96	1.07	15.250
13	-31.95	-822.16	16.58	-34.16	-888.94	17.70	-2.21	-66.78	1.12	19.250
14	-35.06	-1058.99	1.91	-37.39	-1141.09	1.93	-2.33	-82.10	0.03	27.000
15	-37.39	-930.06	-14.57	-39.75	-1002.01	-15.72	-2.36	-71.95	-1.15	19.813
16	-36.98	-787.22	-16.06	-39.26	-847.85	-17.32	-2.28	-60.62	-1.27	15.438
17	-36.44	-630.60	-17.49	-38.64	-678.90	-18.85	-2.20	-48.30	-1.36	12.875
18	-36.33	-461.04	-17.83	-38.48	-496.28	-19.19	-2.15	-35.24	-1.36	12.000
19	-36.77	-225.56	-17.11	-38.91	-242.99	-18.42	-2.14	-17.42	-1.31	12.000
20	-37.29	0.00	-16.38	-39.44	0.00	-17.66	-2.15	0.00	-1.28	12.000

Note: "-" thrust indicate compression

Des. By: RJA Chk. By: GSC

DELTA
ENGINEERS, ARCHITECTS, & LAND SURVEYORS
860 Hooper Road, Endwell, NY 13760
www.deltaengineers.com
Phone: (607) 231-6600
Fax: (607) 231-6650

JOB 2016.059.009
DESCRIPTION 28x8 under 8 5A Case 2
SHEET NO. OF SCALE
CALCULATED BY DATE
CHECKED BY DATE

LRFR LOAD RATING - 5A Case 2

Node	Total Fac.	Factored DC+EH+EV			Factored LL			
Number	Nu (k/ft)	Nu_D (k/ft)	Mu_D (in-k/ft)	Vu_D (k/ft)	Nu_{LL} (k/ft)	$+Mu_{LL}$ (in-k/ft)	Vu_{LL} (k/ft)	Thick (in)
1	-23.51	-22.14	275.22	0.03	-1.38	23.38	0.01	10
2	-23.75	-22.37	270.08	0.80	-1.39	23.08	0.05	10
3	-24.10	-22.70	253.74	1.66	-1.40	22.06	0.11	10
4	-24.66	-23.24	225.56	2.58	-1.42	20.02	0.20	10
5	-25.39	-23.93	184.46	3.59	-1.46	16.68	0.31	10
6	-26.23	-24.72	129.08	4.72	-1.51	11.81	0.43	10
7	-27.18	-25.60	57.57	6.00	-1.58	5.20	0.56	10
8	-28.23	-26.56	-32.02	7.43	-1.66	-3.19	0.69	10.063
9	-29.34	-27.58	-141.89	9.02	-1.76	-13.31	0.81	10.063
10	-30.48	-28.61	-274.38	10.77	-1.87	-24.97	0.92	10.688
11	-31.65	-29.66	-431.26	12.63	-1.99	-37.93	1.01	12.375
12	-32.87	-30.77	-613.57	14.55	-2.10	-51.96	1.07	15.25
13	-34.16	-31.95	-822.16	16.58	-2.21	-66.78	1.12	19.25
14	-37.39	-35.06	-1058.99	1.91	-2.33	-82.10	0.03	27
15	-39.75	-37.39	-930.06	14.57	-2.36	-71.95	1.15	19.813
16	-39.26	-36.98	-787.22	16.06	-2.28	-60.62	1.27	15.438
17	-38.64	-36.44	-630.60	17.49	-2.20	-48.30	1.36	12.875
18	-38.48	-36.33	-461.04	17.83	-2.15	-35.24	1.36	12
19	-38.91	-36.77	-225.56	17.11	-2.14	-17.42	1.31	12
20	-39.44	-37.29	0.00	16.38	-2.15	0.00	1.28	12

note all shear values normalized to positive

Des. By: RJA Chk. By: GSC

DELTA
ENGINEERS, ARCHITECTS, & LAND SURVEYORS
860 Hooper Road, Endwell, NY 13760
www.deltaengineers.com
Phone: (607) 231-6600
Fax: (607) 231-6650

LRFR LOAD RATING - 5A Case 2

Node Number	thk (in)	d (in)	As'in (prov'd) (in^2 / ft)	As'out (prov'd) (in^2 / ft)
1	10.0	8.00	0.92	0.24
2	10.0	8.00	0.92	0.24
3	10.0	8.00	0.92	0.24
4	10.0	8.00	0.92	0.24
5	10.0	8.00	0.92	0.24
6	10.0	8.00	0.92	0.24
7	10.0	8.00	0.92	0.24
8	10.1	7.56	0.92	0.24
9	10.1	7.56	0.92	1.06
10	10.7	8.19	0.24	1.06
11	12.4	9.88	0.48	1.56
12	15.3	12.75	0.48	1.56
13	19.3	16.75	0.48	1.56
14	27.0	24.50	0.48	1.56
15	19.8	17.31	0.48	1.56
16	15.4	12.94	0.48	1.56
17	12.9	10.38	0.48	1.56
18	12.0	9.50	0.48	1.56
19	12.0	9.50	0.48	1.06
20	12.0	9.50	0.48	1.06

Des. By: RJA Chk. By: GSC

DELTA
ENGINEERS, ARCHITECTS, & LAND SURVEYORS
860 Hooper Road, Endwell, NY 13760
www.deltaengineers.com
Phone: (607) 231-6600
Fax: (607) 231-6650

JOB	2016.059.009
DESCRIPTION	28x8 under 8 5A Case 2
SHEET NO.	OF
SCALE	
CALCULATED BY	
DATE	
CHECKED BY	
DATE	

LRFR LOAD RATING - 5A Case 2

Node Number	thk (in)	d (in)	As (prov'd) (in^2 / ft)	Total Fac. Nu (k/ft)	Phi Mn (in-k/ft)
1	10.0	8.00	0.92	-23.51	510.16
2	10.0	8.00	0.92	-23.75	511.05
3	10.0	8.00	0.92	-24.10	512.34
4	10.0	8.00	0.92	-24.66	514.41
5	10.0	8.00	0.92	-25.39	517.09
6	10.0	8.00	0.92	-26.23	520.19
7	10.0	8.00	0.92	-27.18	523.65
8	10.1	7.56	0.24	-28.23	236.08
9	10.1	7.56	1.06	-29.34	556.60
10	10.7	8.19	1.06	-30.48	609.72
11	12.4	9.88	1.56	-31.65	991.96
12	15.3	12.75	1.56	-32.87	1313.35
13	19.3	16.75	1.56	-34.16	1763.23
14	27.0	24.50	1.56	-37.39	2657.76
15	19.8	17.31	1.56	-39.75	1869.01
16	15.4	12.94	1.56	-39.26	1369.85
17	12.9	10.38	1.56	-38.64	1076.99
18	12.0	9.50	1.56	-38.48	977.54
19	12.0	9.50	1.06	-38.91	749.93
20	12.0	9.50	1.06	-39.44	752.21

AASHTO 12.10.4.2.4a

g = 0.85 b f'c = 61

$$\phi M_n = \frac{1}{2}\left[g(\phi_f d)^2 - Nu(2\phi_f d - h) - \frac{(g\phi_f d - N_u - A_s F_y)^2}{g} \right]$$

Des. By: RJA Chk. By: GSC

DELTA
ENGINEERS, ARCHITECTS, & LAND SURVEYORS
860 Hooper Road, Endwell, NY 13760
www.deltaengineers.com
Phone: (607) 231-6600
Fax: (607) 231-6650

JOB	2016.059.009
DESCRIPTION	28x8 under 8 5A Case 2
SHEET NO.	OF
SCALE	
CALCULATED BY	
DATE	
CHECKED BY	
DATE	

LRFR LOAD RATING - 5A Case 2

Node Number	thk (in)	d (in)	Phi Mn (in-k/ft)	Mu_D (in-k/ft)	$+Mu_{LL}$ (in-k/ft)	Inventory Rating	Operating Rating
1	10.0	8.00	510.16	275.22	23.38	10.05	13.03
2	10.0	8.00	511.05	270.08	23.08	10.44	13.54
3	10.0	8.00	512.34	253.74	22.06	11.72	15.20
4	10.0	8.00	514.41	225.56	20.02	14.43	18.71
5	10.0	8.00	517.09	184.46	16.68	19.94	25.85
6	10.0	8.00	520.19	129.08	11.81	33.12	42.94
7	10.0	8.00	523.65	57.57	5.20	89.66	116.22
8	10.1	7.56	236.08	-32.02	-3.19	64.05	83.02
9	10.1	7.56	556.60	-141.89	-13.31	31.16	40.40
10	10.7	8.19	609.72	-274.38	-24.97	13.43	17.41
11	12.4	9.88	991.96	-431.26	-37.93	14.78	19.16
12	15.3	12.75	1313.35	-613.57	-51.96	13.47	17.46
13	19.3	16.75	1763.23	-822.16	-66.78	14.09	18.27
14	27.0	24.50	2657.76	-1058.99	-82.10	19.47	25.24
15	19.8	17.31	1869.01	-930.06	-71.95	13.05	16.92
16	15.4	12.94	1369.85	-787.22	-60.62	9.61	12.46
17	12.9	10.38	1076.99	-630.60	-48.30	9.24	11.98
18	12.0	9.50	977.54	-461.04	-35.24	14.66	19.00
19	12.0	9.50	749.93	-225.56	-17.42	30.09	39.01
20	12.0	9.50	752.21	0.00	0.00	N/A	N/A
					Controlling	**9.24**	**11.98**

g = 0.85 b f'c = 61

$$\phi M_n = \frac{1}{2}\left[g(\phi_f d)^2 - Nu(2\phi_f d - h) - \frac{(g\phi_f d - N_u - A_s F_y)^2}{g} \right]$$

Des. By: RJA Chk. By: GSC

DELTA ENGINEERS
184 Court Street
BINGHAMTON, NEW YORK 13901
(607) 231-6600 Fax 231-6650

JOB	2016.059.009
DESCRIPTION	28x8 under 8 5A Case 2
SHEET NO.	OF
SCALE	
CALCULATED BY	
DATE	
CHECKED BY	
DATE	

LRFR LOAD RATING - 5A Case 2

Elmt Nmbr	thk (in)	d (in)	As (prov'd) (in^2 / ft)	Vtotal (kip/ft)	Vdl only (kip/ft)	Vll only (kip/ft)	Vn=Vc+Vs ϕVn (kip/ft)	1.75 INV	1.35 OPR
1	10.0	8.000	0.92	0.04	0.03	0.01	12.75	2119	2747
2	10.0	8.000	0.92	0.85	0.80	0.05	12.76	242.5	314.4
3	10.0	8.000	0.92	1.77	1.66	0.11	12.78	97.54	126.4
4	10.0	8.000	0.92	2.78	2.58	0.20	12.80	51.21	66.38
5	10.0	8.000	0.92	3.90	3.59	0.31	12.84	30.23	39.19
6	10.0	8.000	0.92	5.15	4.72	0.43	13.62	20.81	26.98
7	10.0	8.000	0.92	6.56	6.00	0.56	30.80	44.46	57.63
8	10.1	7.563	0.24	8.12	7.43	0.69	29.61	32.2	41.74
9	10.1	7.563	1.06	9.83	9.02	0.81	21.57	15.48	20.06
10	10.7	8.188	1.06	11.69	10.77	0.92	15.49	5.142	6.666
11	12.4	9.875	1.56	13.63	12.63	1.01	18.16	5.506	7.137
12	15.3	12.750	1.56	15.63	14.55	1.07	20.24	5.291	6.859
13	19.3	16.750	1.56	17.70	16.58	1.12	24.29	6.867	8.902
14	27.0	24.500	1.56	1.93	1.91	0.03	30.10	1068	1385
15	19.8	17.313	1.56	15.72	14.57	1.15	24.11	8.29	10.75
16	15.4	12.938	1.56	17.32	16.06	1.27	20.70	3.661	4.746
17	12.9	10.375	1.56	18.85	17.49	1.36	47.59	22.13	28.69
18	12.0	9.500	1.56	19.19	17.83	1.36	47.74	21.97	28.48
19	12.0	9.500	1.06	18.42	17.11	1.31	56.94	30.43	39.45
20	12.0	9.500	1.06	17.66	16.38	1.28	64.19	37.42	48.5
							controling:	**3.661**	**4.746**

$$F_d = 0.8 + \frac{1.6}{d} \le 1.3$$

$$F_n = 1 + \frac{N_u}{24 * thk}$$

$$\rho = \frac{A_s}{\phi bd} \le 0.02$$

$$\phi V_n = \phi 0.0316 b d F_{vp} \sqrt{f'c}\left(1.1 + 63\rho\right)\left(\frac{F_d F_n}{F_c}\right)$$

$$F_c = 1 \pm \left(\frac{d}{2 * rad}\right)$$

Shear Resistance With Stirrups **AASHTO 12.10.4.2.5**

Des. By: RJA Chk. By: GSC

DELTA ENGINEERS
184 Court Street
BINGHAMTON, NEW YORK 13901
(607) 231-6600 Fax 231-6650

JOB	2016.059.009		
DESCRIPTION	28x8 under 8 5A Case 2		
SHEET NO.	OF	SCALE	0
CALCULATED BY		DATE	
CHECKED BY		DATE	

Arch Design LRFR LOAD RATING - 5A Case 2

Positive Moment Design (cont.)

Shear Resistance With Radial Stirrups AASHTO 12.10.4.2.6

Element Number	thk (in)	d (in)	Sv MAX (in)	Sv Act (in)	Avr (in^2 / ft)	Sv MAX (in)	Sv Act (in)	Avs (in^2 / ft)	ϕVs (k/ft)
1	10.0	8.13	5.48	0.00	0.00	5.48	0.00	0.00	0
2	10.0	8.13	5.48	0.00	0.00	5.48	0.00	0.00	0
3	10.0	8.13	5.48	0.00	0.00	5.48	0.00	0.00	0
4	10.0	8.13	5.48	0.00	0.00	5.48	0.00	0.00	0
5	10.0	8.13	5.48	0.00	0.00	5.48	0.00	0.00	0
6	10.0	8.13	5.48	0.00	0.00	5.48	0.00	0.00	0
7	10.0	8.13	5.48	0.00	0.00	5.48	0.00	0.00	0
8	10.1	7.69	5.19	0.00	0.00	5.19	0.00	0.00	0
9	10.1	7.69	5.19	0.00	0.00	5.19	0.00	0.00	0
10	10.7	8.31	5.61	0.00	0.00	5.61	0.00	0.00	0
11	12.4	10.00	6.75	0.00	0.00	6.75	0.00	0.00	0
12	15.3	12.88	8.69	0.00	0.00	8.69	0.00	0.00	0
13	19.3	16.88	11.39	0.00	0.00	11.39	0.00	0.00	0
14	27.0	24.63	16.62	0.00	0.00	16.62	0.00	0.00	0
15	19.8	17.44	11.77	0.00	0.00	11.77	0.00	0.00	0
16	15.4	13.06	8.82	0.00	0.00	8.82	0.00	0.00	0
17	12.9	10.50	7.09	4.50	0.01	7.09	4.50	0.02	28.72
18	12.0	9.63	6.50	4.50	0.01	6.50	4.50	0.04	26.57
19	12.0	9.63	6.50	4.50	0.00	6.50	4.50	0.03	27.13
20	12.0	9.63	6.50	4.50	0.00	6.50	4.50	0.01	26.99

For Radial Tension

$$A_{vr} = \frac{1.1 s_v \left(M_u - 0.45 N_u \phi_r d\right)}{f_y r_s \phi_r d}$$

$$s_v \le 0.75 \phi_r d$$

For Shear

$$A_{vs} = \frac{1.1 s_v}{f_y \phi_v d}\left(V_u F_c - V_c\right) + A_{vr}$$

$$V_c = \frac{4V_r}{\frac{M_{nu}}{V_u d} + 1} \le 0.0633 \phi_v b d \sqrt{f'_c}$$

Mnu=Mu-Nu(4h-d)/8

rearanging Avs equation above and

taking Fc =1.0, Vs = (Avs-Avr)*Fys*ϕv*d/(1.1*Sv) (<8*√F'c*Bw*d)

(#3@4.5")

As provided = 0.293 sq.in. / L.F.

Des. By: RJA Chk. By: GSC

Project: 2016.059.009 BY: GSC 7/21/2016
Anchored Wingwall Design CHK:

Controling Wall	WW1	
Backfill Slope perp to road	2	:1
Wingwall Angle $\theta_1 + \theta_2 =$	60	deg (with respect to slope, not road)
Effective Backfill Slope	23.41	deg
Rise to level grade	8.82	ft
Stem projection above grade	3	in.
Surcharge	0	ft

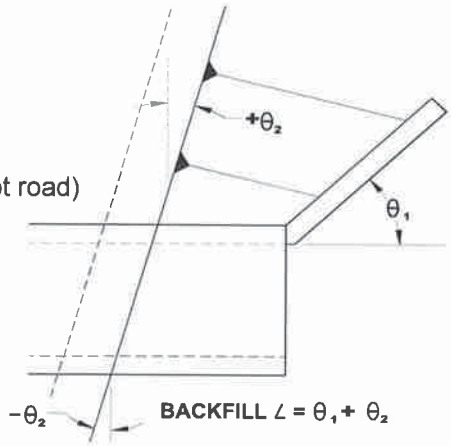

Wingwall Stability Check:

Wall Height (high) =	13.24	ft ✓	$\phi_{AB} = 34$
Wall Height (low) =	9.41	ft ✓	$\theta_{AB} = 90$
Wall Length =	18.84	ft	$\delta_{AB} = 26$
Plate tributary width =	0.00	ft	$(Ka)_{AB} = 0.34$
Unit Weight of Backfill, γ_{soil} =	140.00		$\phi_{BC} = 34$
Unit Weight of Conc, γ_c =	150.00		$\theta_{BC} = 120$
Adjusted Broken Backfill β'=	19.95	deg.	$\delta_{BC} = 17$
Wall thickness =	10.00	in	$(Ka)_{BC} = 0.11$
Bearing Resistance, ϕq_{ult} =	15525	psf (FACTORED)	
Friction Coefficient μ =	0.54	=0.8*TAN(ϕ)	Conc Railing Wt. = 0 lb/ft
Vehicle Collision Force =	0.00	k	Location wrt Stem F.F. = 0.625 ft
Distribution Length =	8.50	ft	
Location of Collision Force =	1.50	ft (Above top of wall)	

		Dist. To Anchor	Height at Anchor	Contributary width	Anchor type	Bearing Pressure	Stability Check
Anchor #1:	L1 =	2.25 ft ✓	12.78 ft	4.75 ft	E	5179	OK
Anchor #2:	L2 =	5.00 ft ✓	11.77 ft	4.71 ft	E	4214	OK
Anchor #3:	L3 =	4.50 ft	10.85 ft	4.71 ft	D	4086	OK
Anchor #4:	L4 =	5.00 ft	9.83 ft	4.67 ft	C	4159	OK
Anchor #5:	L5 =	0.00 ft	0.00 ft	0.00 ft		NA	NA

Anchor Type Data

Anchor Type	Length at Bottom Anchor	Anchor End	Total	Length at Top Anchor	End	Total
	(in)	(in)	(in)	(in)	(in)	(in)
B	16	8.080	24.080	41.375	8.080	49.455
C	28	8.080	36.080	53.375	8.080	61.455
D	40	8.080	48.080	65.375	8.080	73.455
E	52	8.080	60.080	77.375	8.080	85.455
F	64	8.080	72.080	89.375	8.080	97.455
G	76	8.080	84.080	101.375	8.080	109.455
H	88	8.080	96.080	113.375	8.080	121.455

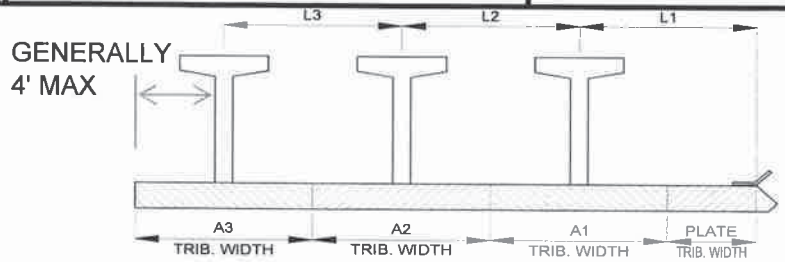

Des. By: RJA Chk. By: GSC

Project: 2016.059.009
Anchored Wingwall Design

BY: GSC 7/21/2016
CHK:

Anchor #1 Stability Check

Limit State	Str 1-a	Str 1-b	Str IV	Service	Extre-II
EH	1.50	1.50	1.50	1.00	1.50
LL/LS	1.75	1.75	0.00	1.00	0.50
EV	1.00	1.35	1.35	1.00	1.00
DC	0.90	1.25	1.50	1.00	0.90
EQ	0.00	0.00	0.00	0.00	0.00
CT	0.00	0.00	0.00	0.00	1.00
Resistance Factors					
Sliding	0.90	0.90	0.90	1.00	0.90
Bearing	0.45	0.45	0.45	0.33	0.45

Soil Properties:

Active Earth Coeff., $(Ka)_{AB}$ = 0.340
Active Earth Coeff., $(Ka)_{ABH}$ = 0.307
Active Earth Coeff., $(Ka)_{ABV}$ = 0.146
Active Earth Coeff., $(Ka)_{BC}$ = 0.110
Active Earth Coeff., $(Ka)_{BCH}$ = 0.105
Active Earth Coeff., $(Ka)_{BCV}$ = 0.032

Modification Factor = 1.00

Overturning Check:

Anchor Height = 12.7826 ft
Design Wall Height, H = 15.62 ft
Anchor Type = E
Anchor Length at Top, L_{top} = 7.12 ft
Anchor Length at Bot., L_{bot} = 5.01 ft

Back slope $\beta 1$ = 23.41 deg.

Soil Pressure:

Horizontal (kah) :
Soil Pressure at A, σ_{LL} = 0 psf
Soil Pressure at B, σ_{Bab} = 520.51 psf
Soil Pressure at B, σ_{Bbc} = 177.87 psf
Soil Pressure at C, σ_{BOT} = 236.59 psf

Vertical (kav) :
Soil Pressure at A, σ_{LL} = 0 psf
Soil Pressure at B, σ_{Bab} = 248.27 psf
Soil Pressure at B, σ_{Bbc} = -54.38 psf
Soil Pressure at C, σ_{BOT} = -72.33 psf

Driving Forces:

Force $P_{Surcharge}$ = 0 lb/ft
Moment Arm, y_1 = 7.81 ft
Overturning Moment, DM1 = 0 ft-lb/ft
Force P_{ABH} = 3153 lb/ft
Moment Arm, y_2 = 7.54 ft
Overturning Moment, DM2 = 23772 ft-lb/ft
Force P_{BC1H} = 711 lb/ft
Moment Arm, y_3 = 1.50 ft
Overturning Moment, DM3 = 1067 ft-lb/ft
Force P_{BC2H} = 117 lb/ft
Moment Arm, y_4 = 0.83 ft
Overturning Moment, DM4 = 98 ft-lb/ft

Resisting Forces:

Weight of Wall, Ww = 1598 lb/ft
Dist. From PT. O, X_1 = 0.42 ft
Resisting Moment, RM1 = 666 ft-lb/ft
Backslope Soil, I_A = 1537.13 lb/ft
Dist. From PT. O, X_2 = 5.58 ft
Resisting Moment, RM2 = 8578 ft-lb/ft
Soil Above Anchor, I_B = 9255 lb/ft
Dist. From PT. O, X_3 = 4.39 ft
Resisting Moment, RM3 = 40664 ft-lb/ft
Weight of Soil, II_A = 2123 lb/ft
Dist. From PT. O, X_4 = 3.000 ft
Resisting Moment, RM4 = 6370 ft-lb/ft

Des. By: RJA Chk. By: GSC

Anchor #1 Stability Check

Driving Forces (Con't):

Collision Force ,CT =	0	lb/ft
Moment Arm, y_5 =	14.28	ft
Overturning Moment, DM5 =	0	ft-lb/ft

Resisting Forces (Con't):

Weight of Soil, W_B =	683	lb/ft
Dist. From PT. O, X_5 =	6.096	ft
Resisting Moment, RM5 =	4164	ft-lb/ft
Force P_{ABV} =	1504	lb/ft
Moment Arm, x6 =	7.95	ft
Resisting Moment, RM6 =	11964	ft-lb/ft
Force P_{BC1V} =	-218	lb/ft
Moment Arm, x7 =	6.56	ft
Resisting Moment, RM7 =	-1427	ft-lb/ft
Force P_{BC2V} =	-36	lb/ft
Moment Arm, x8 =	6.10	ft
Resisting Moment, RM8 =	-219	ft-lb/ft
Weight of Conc. Railing =	0	lb/ft
Moment Arm, x9 =	0.625	ft
Resisting Moment, RM9 =	0	ft-lb/ft

Location of Resultant Force:

	Str 1-a	Str 1-b	Str IV	Service	Extre-II
Overturning Moment (k-ft):	37.41	37.41	37.41	24.94	37.41
Resisting Moment (k-ft):	58.74	79.32	79.49	58.80	58.74
Vertical Loads (lb) =	13567	18371	18771	13727	13567
x (ft) =	1.57	2.28	2.24	2.47	1.57
Footing Length, B (ft) =	5.84	5.84	5.84	5.84	5.84
e (ft) =	1.35	0.64	0.68	0.45	1.35

(note: 80% of soil weight used for overturning resist.)

Overturning Check:

1/3 B (ft) =	1.95	1.95	1.95	1.95	1.95
Is resultant within middle 2/3?	OK	OK	OK	OK	OK

Bearing Check: AASHTO 11.6.3.2

Resist. Mom. for Bearing (k-ft):	70.69	95.46	95.63	70.76	70.69
Vertical Loads for Bearing (lb) =	16287	22043	22442	16446	16287
x for bearing (ft) =	2.04	2.63	2.59	2.79	2.04
e for bearing (ft) =	0.88	0.29	0.33	0.13	0.88
Beff (ft) =	3.14	4.56	4.48	4.93	3.14
Bearing Pressure (psf) =	5179	4831	5005	3333	5179
Bearing Resistance, ϕq_{ult} =	15525	15525	15525	5000	15525
	OK	OK	OK	OK	OK

Sliding Check:

Sliding Force (lb/ft) =	5973	5973	5973	3982	5973
Sliding Resistance =	7910	10705	10899	8875	7910
	OK	OK	OK	OK	OK ✓

Anchor #2 Stability Check

Limit State	Str 1-a	Str 1-b	Str IV	Service	Extre-II
EH	1.50	1.50	1.50	1.00	1.50
LL/LS	1.75	1.75	0.00	1.00	0.50
EV	1.00	1.35	1.35	1.00	1.00
DC	0.90	1.25	1.50	1.00	0.90
EQ	0.00	0.00	0.00	0.00	0.00
CT	0.00	0.00	0.00	0.00	1.00
Resistance Factors					
Sliding	0.90	0.90	0.90	1.00	0.90
Bearing	0.45	0.45	0.45	0.33	0.45

Soil Properties:

Active Earth Coeff., $(Ka)_{AB}$ = 0.340
Active Earth Coeff., $(Ka)_{ABH}$ = 0.307
Active Earth Coeff., $(Ka)_{ABV}$ = 0.146
Active Earth Coeff., $(Ka)_{BC}$ = 0.110
Active Earth Coeff., $(Ka)_{BCH}$ = 0.105
Active Earth Coeff., $(Ka)_{BCV}$ = 0.032

Modification Factor = 1.00

Overturning Check:

Anchor Height = 11.7661 ft
Design Wall Height, H = 14.60 ft
Anchor Type = E
Anchor Length at Top, L_{top} = 7.12 ft
Anchor Length at Bot., L_{bot} = 5.01 ft

Back slope $\beta 1$ = 23.41 deg.

Soil Pressure:

Horizontal (kah) :
Soil Pressure at A, σ_{LL} = 0 psf
Soil Pressure at B, σ_{Bab} = 476.84 psf
Soil Pressure at B, σ_{Bbc} = 162.95 psf
Soil Pressure at C, σ_{BOT} = 221.67 psf

Vertical (kav) :
Soil Pressure at A, σ_{LL} = 0 psf
Soil Pressure at B, σ_{Bab} = 227.44 psf
Soil Pressure at B, σ_{Bbc} = -49.82 psf
Soil Pressure at C, σ_{BOT} = -67.77 psf

Driving Forces:

Force $P_{Surcharge}$ = 0 lb/ft
Moment Arm, y_1 = 7.30 ft
Overturning Moment, DM1 = 0 ft-lb/ft
Force P_{ABH} = 2646 lb/ft
Moment Arm, y_2 = 7.20 ft
Overturning Moment, DM2 = 19054 ft-lb/ft
Force P_{BC1H} = 652 lb/ft
Moment Arm, y_3 = 1.50 ft
Overturning Moment, DM3 = 978 ft-lb/ft
Force P_{BC2H} = 117 lb/ft
Moment Arm, y_4 = 0.83 ft
Overturning Moment, DM4 = 98 ft-lb/ft

Resisting Forces:

Weight of Wall, Ww = 1471 lb/ft
Dist. From PT. O, X_1 = 0.42 ft
Resisting Moment, RM1 = 613 ft-lb/ft
Backslope Soil, I_A = 1537.13 lb/ft
Dist. From PT. O, X_2 = 5.58 ft
Resisting Moment, RM2 = 8578 ft-lb/ft
Soil Above Anchor, I_B = 8241 lb/ft
Dist. From PT. O, X_3 = 4.39 ft
Resisting Moment, RM3 = 36211 ft-lb/ft
Weight of Soil, II_A = 2123 lb/ft
Dist. From PT. O, X_4 = 3.000 ft
Resisting Moment, RM4 = 6370 ft-lb/ft

Anchor #2 Stability Check

Driving Forces (Con't):

Collision Force ,CT =	0	lb/ft
Moment Arm, y_5 =	13.27	ft
Overturning Moment, DM5 =	0	ft-lb/ft

Resisting Forces (Con't):

Weight of Soil, II_B =	683	lb/ft
Dist. From PT. O, X_5 =	6.096	ft
Resisting Moment, RM5 =	4164	ft-lb/ft
Force P_{ABV} =	1262	lb/ft
Moment Arm, x6 =	7.95	ft
Resisting Moment, RM6 =	10041	ft-lb/ft
Force P_{BC1V} =	-199	lb/ft
Moment Arm, x7 =	6.56	ft
Resisting Moment, RM7 =	-1307	ft-lb/ft
Force P_{BC2V} =	-36	lb/ft
Moment Arm, x8 =	6.10	ft
Resisting Moment, RM8 =	-219	ft-lb/ft
Weight of Conc. Railing =	0	lb/ft
Moment Arm, x9 =	0.625	ft
Resisting Moment, RM9 =	0	ft-lb/ft

Location of Resultant Force:

	Str 1-a	Str 1-b	Str IV	Service	Extre-II
Overturning Moment (k-ft):	30.19	30.19	30.19	20.13	30.19
Resisting Moment (k-ft):	53.32	72.01	72.16	53.39	53.32
Vertical Loads (lb) =	12418	16816	17184	12566	12418
x (ft) =	1.86	2.49	2.44	2.65	1.86
Footing Length, B (ft) =	5.84	5.84	5.84	5.84	5.84
e (ft) =	1.06	0.43	0.48	0.27	1.06

(note: 80% of soil weight used for overturning resist.)

Overturning Check:

1/3 B (ft) =	1.95	1.95	1.95	1.95	1.95
Is resultant within middle 2/3?	OK	OK	OK	OK	OK

Bearing Check: AASHTO 11.6.3.2

Resist. Mom. for Bearing (k-ft):	64.39	86.95	87.10	64.45	64.39
Vertical Loads for Bearing (lb) =	14935	20214	20582	15082	14935
x for bearing (ft) =	2.29	2.81	2.76	2.94	2.29
e for bearing (ft) =	0.63	0.11	0.16	-0.02	0.63
Beff (ft) =	3.73	4.97	4.88	5.29	3.73
Bearing Pressure (psf) =	4009	4065	4214	2849	4009
Bearing Resistance, ϕq_{ult} =	15525	15525	15525	5000	15525
	OK	OK	OK	OK	OK

Sliding Check:

Sliding Force (lb/ft) =	5123	5123	5123	3416	5123
Sliding Resistance =	7253	9817	9996	8139	7253
	OK	OK	OK	OK	OK ✓

Anchor #3 Stability Check

Limit State	Str 1-a	Str 1-b	Str IV	Service	Extre-II
EH	1.50	1.50	1.50	1.00	1.50
LL/LS	1.75	1.75	0.00	1.00	0.50
EV	1.00	1.35	1.35	1.00	1.00
DC	0.90	1.25	1.50	1.00	0.90
EQ	0.00	0.00	0.00	0.00	0.00
CT	0.00	0.00	0.00	0.00	1.00
Resistance Factors					
Sliding	0.90	0.90	0.90	1.00	0.90
Bearing	0.45	0.45	0.45	0.33	0.45

Soil Properties:

Active Earth Coeff., $(Ka)_{AB}$ = 0.340
Active Earth Coeff., $(Ka)_{ABH}$ = 0.307
Active Earth Coeff., $(Ka)_{ABV}$ = 0.146
Active Earth Coeff., $(Ka)_{BC}$ = 0.110
Active Earth Coeff., $(Ka)_{BCH}$ = 0.105
Active Earth Coeff., $(Ka)_{BCV}$ = 0.032

Modification Factor = 1.00

Overturning Check:

Anchor Height = 10.8513 ft
Design Wall Height, H = 13.25 ft
Anchor Type = D
Anchor Length at Top, L_{top} = 6.12 ft
Anchor Length at Bot., L_{bot} = 4.01 ft

Back slope $\beta 1$ = 23.41 deg.

Soil Pressure:

Horizontal (kah) :
Soil Pressure at A, σ_{LL} = 0 psf
Soil Pressure at B, σ_{Bab} = 418.94 psf
Soil Pressure at B, σ_{Bbc} = 143.16 psf
Soil Pressure at C, σ_{BOT} = 201.88 psf

Vertical (kav) :
Soil Pressure at A, σ_{LL} = 0 psf
Soil Pressure at B, σ_{Bab} = 199.82 psf
Soil Pressure at B, σ_{Bbc} = -43.77 psf
Soil Pressure at C, σ_{BOT} = -61.72 psf

Driving Forces:

Force $P_{Surcharge}$ = 0 lb/ft
Moment Arm, y_1 = 6.63 ft
Overturning Moment, DM1 = 0 ft-lb/ft
Force P_{ABH} = 2043 lb/ft
Moment Arm, y_2 = 6.75 ft
Overturning Moment, DM2 = 13790 ft-lb/ft
Force P_{BC1H} = 573 lb/ft
Moment Arm, y_3 = 1.50 ft
Overturning Moment, DM3 = 859 ft-lb/ft
Force P_{BC2H} = 117 lb/ft
Moment Arm, y_4 = 0.83 ft
Overturning Moment, DM4 = 98 ft-lb/ft

Resisting Forces:

Weight of Wall, Ww = 1356 lb/ft
Dist. From PT. O, X_1 = 0.42 ft
Resisting Moment, RM1 = 565 ft-lb/ft
Backslope Soil, I_A = 1135.74 lb/ft
Dist. From PT. O, X_2 = 4.91 ft
Resisting Moment, RM2 = 5581 ft-lb/ft
Soil Above Anchor, I_B = 6300 lb/ft
Dist. From PT. O, X_3 = 3.89 ft
Resisting Moment, RM3 = 24532 ft-lb/ft
Weight of Soil, II_A = 1633 lb/ft
Dist. From PT. O, X_4 = 2.500 ft
Resisting Moment, RM4 = 4083 ft-lb/ft

Anchor #3 Stability Check

Driving Forces (Con't):

Collision Force ,CT =	0	lb/ft
Moment Arm, y_5 =	12.35	ft
Overturning Moment, DM5 =	0	ft-lb/ft

Resisting Forces (Con't):

Weight of Soil, W_B =	683	lb/ft
Dist. From PT. O, X_5 =	5.096	ft
Resisting Moment, RM5 =	3481	ft-lb/ft
Force P_{ABV} =	974	lb/ft
Moment Arm, x6 =	6.95	ft
Resisting Moment, RM6 =	6776	ft-lb/ft
Force P_{BC1V} =	-175	lb/ft
Moment Arm, x7 =	5.56	ft
Resisting Moment, RM7 =	-974	ft-lb/ft
Force P_{BC2V} =	-36	lb/ft
Moment Arm, x8 =	5.10	ft
Resisting Moment, RM8 =	-183	ft-lb/ft
Weight of Conc. Railing =	0	lb/ft
Moment Arm, x9 =	0.625	ft
Resisting Moment, RM9 =	0	ft-lb/ft

Location of Resultant Force:

	Str 1-a	Str 1-b	Str IV	Service	Extre-II
Overturning Moment (k-ft):	22.12	22.12	22.12	14.75	22.12
Resisting Moment (k-ft):	36.27	48.98	49.13	36.33	36.27
Vertical Loads (lb) =	9786	13258	13597	9921	9786
x (ft) =	1.45	2.03	1.99	2.18	1.45
Footing Length, B (ft) =	4.84	4.84	4.84	4.84	4.84
e (ft) =	0.97	0.39	0.43	0.24	0.97

(note: 80% of soil weight used for overturning resist.)

Overturning Check:

1/3 B (ft) =	1.61	1.61	1.61	1.61	1.61
Is resultant within middle 2/3?	OK	OK	OK	OK	OK

Bearing Check: AASHTO 11.6.3.2

Resist. Mom. for Bearing (k-ft):	43.81	59.16	59.30	43.86	43.81
Vertical Loads for Bearing (lb) =	11736	15891	16230	11872	11736
x for bearing (ft) =	1.85	2.33	2.29	2.45	1.85
e for bearing (ft) =	0.57	0.09	0.13	-0.03	0.57
Beff (ft) =	2.89	4.05	3.97	4.35	2.89
Bearing Pressure (psf) =	4058	3921	4086	2729	4058
Bearing Resistance, ϕq_{ult} =	15525	15525	15525	5000	15525
	OK	OK	OK	OK	OK

Sliding Check:

Sliding Force (lb/ft) =	4099	4099	4099	2733	4099
Sliding Resistance =	5700	7718	7882	6406	5700
	OK	OK	OK	OK	OK

Anchor #4 Stability Check

Limit State	Str 1-a	Str 1-b	Str IV	Service	Extre-II
EH	1.50	1.50	1.50	1.00	1.50
LL/LS	1.75	1.75	0.00	1.00	0.50
EV	1.00	1.35	1.35	1.00	1.00
DC	0.90	1.25	1.50	1.00	0.90
EQ	0.00	0.00	0.00	0.00	0.00
CT	0.00	0.00	0.00	0.00	1.00
Resistance Factors					
Sliding	0.90	0.90	0.90	1.00	0.90
Bearing	0.45	0.45	0.45	0.33	0.45

Soil Properties:

Active Earth Coeff., $(Ka)_{AB}$ = 0.340

Active Earth Coeff., $(Ka)_{ABH}$ = 0.307

Active Earth Coeff., $(Ka)_{ABV}$ = 0.146

Active Earth Coeff., $(Ka)_{BC}$ = 0.110

Active Earth Coeff., $(Ka)_{BCH}$ = 0.105

Active Earth Coeff., $(Ka)_{BCV}$ = 0.032

Modification Factor = 1.00

Overturning Check:

Anchor Height = 9.83488 ft

Design Wall Height, H = 11.80 ft

Anchor Type = C

Anchor Length at Top, L_{top} = 5.12 ft

Anchor Length at Bot., L_{bot} = 3.01 ft

Back slope $\beta 1$ = 23.41 deg.

Soil Pressure:

Horizontal (kah) :

Soil Pressure at A, σ_{LL} = 0 psf

Soil Pressure at B, σ_{Bab} = 356.67 psf

Soil Pressure at B, σ_{Bbc} = 121.88 psf

Soil Pressure at C, σ_{BOT} = 180.60 psf

Vertical (kav) :

Soil Pressure at A, σ_{LL} = 0 psf

Soil Pressure at B, σ_{Bab} = 170.12 psf

Soil Pressure at B, σ_{Bbc} = -37.26 psf

Soil Pressure at C, σ_{BOT} = -55.22 psf

Driving Forces:

Force $P_{Surcharge}$ = 0 lb/ft

Moment Arm, y_1 = 5.90 ft

Overturning Moment, DM1 = 0 ft-lb/ft

Force P_{ABH} = 1481 lb/ft

Moment Arm, y_2 = 6.27 ft

Overturning Moment, DM2 = 9280 ft-lb/ft

Force P_{BC1H} = 488 lb/ft

Moment Arm, y_3 = 1.50 ft

Overturning Moment, DM3 = 731 ft-lb/ft

Force P_{BC2H} = 117 lb/ft

Moment Arm, y_4 = 0.83 ft

Overturning Moment, DM4 = 98 ft-lb/ft

Resisting Forces:

Weight of Wall, Ww = 1229 lb/ft

Dist. From PT. O, X_1 = 0.42 ft

Resisting Moment, RM1 = 512 ft-lb/ft

Backslope Soil, I_A = 794.97 lb/ft

Dist. From PT. O, X_2 = 4.25 ft

Resisting Moment, RM2 = 3377 ft-lb/ft

Soil Above Anchor, I_B = 4542 lb/ft

Dist. From PT. O, X_3 = 3.39 ft

Resisting Moment, RM3 = 15415 ft-lb/ft

Weight of Soil, II_A = 1143 lb/ft

Dist. From PT. O, X_4 = 2.000 ft

Resisting Moment, RM4 = 2287 ft-lb/ft

Anchor #4 Stability Check

Driving Forces (Con't):

Collision Force ,CT =	0	lb/ft
Moment Arm, y_5 =	12.35	ft
Overturning Moment, DM5 =	0	ft-lb/ft

Resisting Forces (Con't):

Weight of Soil, W_B =	683	lb/ft
Dist. From PT. O, X_5 =	4.096	ft
Resisting Moment, RM5 =	2798	ft-lb/ft
Force P_{ABV} =	706	lb/ft
Moment Arm, x6 =	5.95	ft
Resisting Moment, RM6 =	4205	ft-lb/ft
Force P_{BC1V} =	-149	lb/ft
Moment Arm, x7 =	4.56	ft
Resisting Moment, RM7 =	-680	ft-lb/ft
Force P_{BC2V} =	-36	lb/ft
Moment Arm, x8 =	4.10	ft
Resisting Moment, RM8 =	-147	ft-lb/ft
Weight of Conc. Railing =	0	lb/ft
Moment Arm, x9 =	0.625	ft
Resisting Moment, RM9 =	0	ft-lb/ft

Location of Resultant Force:

	Str 1-a	Str 1-b	Str IV	Service	Extre-II
Overturning Moment (k-ft):	15.16	15.16	15.16	10.11	15.16
Resisting Moment (k-ft):	22.94	30.99	31.12	22.99	22.94
Vertical Loads (lb) =	7358	9977	10284	7481	7358
x (ft) =	1.06	1.59	1.55	1.72	1.06
Footing Length, B (ft) =	3.84	3.84	3.84	3.84	3.84
e (ft) =	0.86	0.33	0.37	0.20	0.86

(note: 80% of soil weight used for overturning resist.)

Overturning Check:

1/3 B (ft) =	1.28	1.28	1.28	1.28	1.28
Is resultant within middle 2/3?	OK	OK	OK	OK	OK

Bearing Check: AASHTO 11.6.3.2

Resist. Mom. for Bearing (k-ft):	27.72	37.43	37.56	27.77	27.72
Vertical Loads for Bearing (lb) =	8791	11911	12218	8914	8791
x for bearing (ft) =	1.43	1.87	1.83	1.98	1.43
e for bearing (ft) =	0.49	0.05	0.09	-0.06	0.49
Beff (ft) =	2.11	3.17	3.10	3.44	2.11
Bearing Pressure (psf) =	4159	3755	3938	2588	4159
Bearing Resistance, ϕq_{ult} =	15525	15525	15525	5000	15525
	OK	OK	OK	OK	OK

Sliding Check:

Sliding Force (lb/ft) =	3128	3128	3128	2086	3128	
Sliding Resistance =	4269	5784	5934	4810	4269	
	OK	OK	OK	OK	OK	✓

Connection Plate Design

Assumption: Wall is more likely to slide then to rotate.

Soil Properties:		**Load Factors:**	(overturning & sliding)	(Bearing Pressure)
At Rest Earth Coeff., $(Ko)_{AB}$ =	0.441	EH =	1.35	1.35
At Rest Earth Coeff., $(Ko)_{ABH}$ =	0.398	EV =	0.00	0
At Rest Earth Coeff., $(Ko)_{ABV}$ =	0.190	DC =	0.00	0
		LS =	0	0
		Live Load Surcharge =	0 ft	

Connection Plate Locations

Wall Height =	13.24	ft	
Wall Width for Plates =	0.00	ft ✓	(Wall does not count on plates for stability)
Plate #3, y1 from Bot of Wall Stem =	9.74	ft	
Plate #2, y1 from Bot of Wall Stem =	4.50	ft	
Plate #1, y1 from Bot of Wall Stem =	1.5	ft (input 0 if no plate #1)	

Tributary Wall Height for Plate #3 =	6.12	ft
Tributary Wall Height for Plate #2 =	4.12	ft
Tributary Wall Height for Plate #1 =	3	ft
Conn. Plate Force EH, Plate #3 =	0	lb
Conn. Plate Force EH, Plate #2 =	0	lb
Conn. Plate Force EH, Plate #1 =	0	lb
Conn. Plate Force LS, Plate #3 =	0	lb
Conn. Plate Force LS, Plate #2 =	0	lb
Conn. Plate Force LS, Plate #1 =	0	lb
Conn. Plate Force, Plate #3 Pu =	0	lb
Conn. Plate Force, Plate #2 Pu =	0	lb
Conn. Plate Force, Plate #1 Pu =	0	lb
Controlling Pu =	0.0	kips

Check Bolt / Insert Capacity

No. of Bolts Per Connection =	2		
Bolt Pu =	0.00	kips	
Bolt Pullout Capacity (ult) =	8.2875	kips	**OK**
Bolt Shear Capacity (ult) =	4.3875	kips	**OK**

Connection Plate Design

Check Bending of Plate

Moment Arm for Plate Bending =	4.5	in
Connection Plate Height(width) =	10	in
Connection Plate Thickness =	0.50	in
Connection Plate Yield Strength Fy =	36	ksi
Reduction Factor for Bending Phi =	0.9	

Factored Mu =	0.00	k-in	
S_{pl} =	0.42	in^3	
Plate Bending Stress Fult =	0.00	ksi	**OK**

Check Bending in Wall - Vertical Bars

Assumptions: 1.) Wall stem is cantileverd from anchor.
2.) Use active earth pressure because wall is free to rotate.
3.) Critical Wall section will be at maximum horizontal load, at tallest anchor section.

Modification Factor = 1

Data:

H_{max} =	15.62	ft
h_{max} =	12.12	ft
LL surcharge, V_{LS} =	0.000	ksf
γ_{soil} =	0.140	ksf
K_a =	0.34	
δ =	25.5	
f'c =	4	ksi
fy =	60	ksi
0.65 < β1 < 0.85 =	0.85	(5.7.2.2)
Vertical Bars Size:	# 5	
Spacing:	5	in √
Bar Cover:	2	in

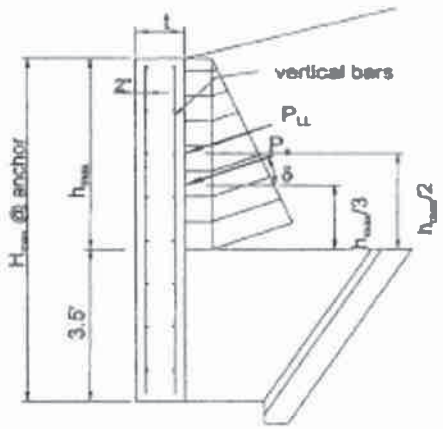

Find the horizontal load:

$$P_{soil} = (1/2)\gamma_S K_A h_{max}^2 (\cos\delta) = \quad 3.15 \text{ kip/ft}$$

$$P_{LS} = \sigma_{LS} K_A h_{max} (\cos\delta) = \quad 0.00 \text{ kip/ft}$$

CT = 0.00 kip/ft

Factored Loads:

	Str 1-a	Service	Extre-II
Mu	19.10	12.74	19.10
Vu	4.73	3.15	4.73

Moment Capacity:

As prov. :	0.736	in^2
d (in):	7.69	d = t - 2.0" cov. - 1/2 Bar Φ
a (in):	1.083	a=As*fy/(0.85*b*f'c)
c (in):	1.274	c=a/β1
ϕMn (kip-ft):	**23.68**	ϕMn = ϕ_M*As*fy*(d-a/2)/12
ϕ_M =	0.90	

(ϕ_M=0.75+0.15[(ε_t-ε_{cl})/(ε_{tl}-ε_{cl})], 0.75min, 0.9max, 5.5.4.2.1-2)

ϕMn > Mu **OK!**

Shear Capacity Check

ϕVn (kip): **10.49** ϕVn = 0.90*β*√f'c*b*d

β = 2.00

ϕVn > Vu **OK!**

Check Min. Reinforcement:

fr = .24 * √f'c = 0.48 ksi (5.4.2.6)

S = $bt^2/6$ = 200 in3

Flex. cracking var. fac. (Other Con. Strs.) 1.60 γ_1

A615, Gr. 60 Reinforcement (Carbon steel) 0.67 γ_3

Mcr = γ_3 * [(γ_1 * fr)*S] = 8.58 kip-ft (5.7.3.3.2)

Mr = ϕMn > (lesser of Mcr or 1.33 Mu)

Mcr = 8.58 kip-ft

1.33 * Mu = 25.41 kip-ft

Mr = ϕMn = 23.68 kip-ft **OK**

Crack Control Check

Ma = 12.74 **kip-ft/ft**

$E_c = 1820 \bullet \sqrt{f'c} =$ 3640ksi

$E_s =$ 29000ksi dc= 2.31in

γe= 0.75

$n = E_s / E_c =$ 7.97

ρn = 0.0635904

$k = \sqrt{2\rho n + \rho n^2} - \rho n =$ 0.299

$j = 1 - (k/3) =$ 0.900

$f_s = (M)/(A_s jd) =$ 29.98 ksi

Bs= 1+dc/(0.7*(h-dc))= 1.43

max spa ≤ [(700γe) / (βsfs)] - 2dc = 8 in **OK!** /

Check Type E Anchor Attachment

Assumptions: 1.) Only top three connection bars, represented by T1, T2 & T3 in sketch below, will resist tension.
2.) Assume min. steel will control, design for 1.33 Mu (See ART. 5.7.3.3.2)

Anchor #1 $M_{D\,EH}$=	118.45	kip-ft	Anchor #1 $M_{D\,LS}$=	0.00	kip-ft
Anchor #2 $M_{D\,EH}$=	94.81	kip-ft	Anchor #2 $M_{D\,LS}$=	0.00	kip-ft
Anchor #3 $M_{D\,EH}$=	69.46	kip-ft	Anchor #3 $M_{D\,LS}$=	0.00	kip-ft
Anchor #1 $M_{D\,CT}$=	0.00	kip-ft	Anchor #1 1 Mod. Factor =	1.00	
Anchor #2 $M_{D\,CT}$=	0.00	kip-ft	Anchor #2 1 Mod. Factor =	1.00	
Anchor #3 $M_{D\,CT}$=	0.00	kip-ft	Anchor #3 1 Mod. Factor =	1.00	

Data:

f'c =	4	ksi
fy =	60	ksi
0.65 < β1 < 0.85 =	0.85	(5.7.2.2)
Connection Bars Size:	# 7	

Factored Loads:

	Str 1-a	Service	Extre-II
Anchor #1 Mu (k-ft) =	177.67	118.45	177.67
Anchor #2 Mu (k-ft) =	142.21	94.809	142.21
Anchor #3 Mu (k-ft) =	104.18	69.456	104.18
1.33 Mu =	236.31		

Moment Capacity:

As prov. :	3.608	in^2	(6 Bars)
d (in):	30.00		
b (in):	6.00		
a (in):	10.612	a=As*fy/(0.85*b*f'c)	
c (in):	12.484	c=a/β1	
ϕMn (kip-ft):	**383.31**	ϕMn = ϕ_M*As*fy*(d-a/2)/12	
ϕ_M =	0.86		

(ϕ_M=0.75+0.15[(ε_t-ε_{cl})/(ε_{tl}-ε_{cl})], 0.75min, 0.9max, 5.5.4.2.1-2)

ϕMn > Mu **OK!**

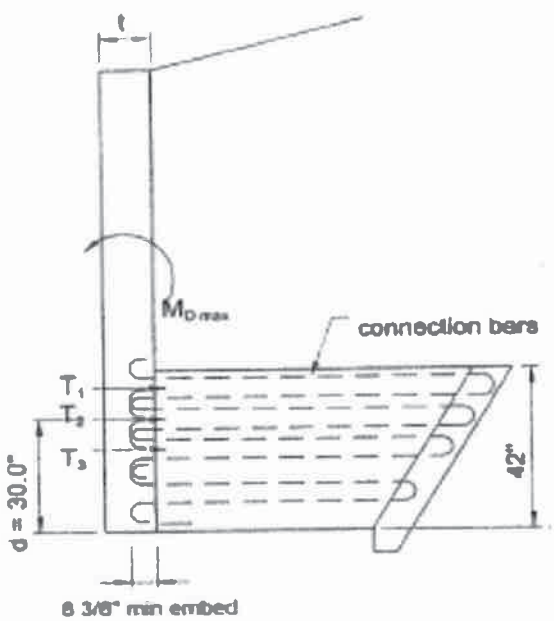

Check Hook Development:

db (in): 0.875

ART 5.11.2.4

L_{hb} (in):	16.63	<-- Controls
or		
8db (in):	7.00	
or		
6in min:	6.00	

L_{dh} (in): 6.16 =(0.8)L_{hb} x A,req'd/As,pro'd

Project: 2016.059.009 BY: GSC 7/21/2016
Anchored Wingwall Design CHK:

Controling Wall	WW2	
Backfill Slope perp to road	4	:1
Wingwall Angle $\theta_1 + \theta_2 =$	20	deg (with respect to slope, not road)
Effective Backfill Slope	4.89	deg
Rise to level grade	14.31	ft
Stem projection above grade	3	in.
Surcharge	0	ft

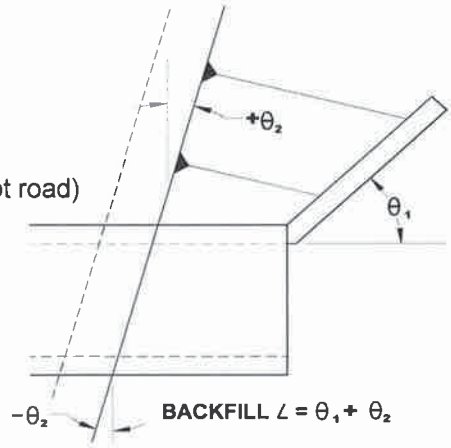

Wingwall Stability Check:

Wall Height (high) =	7.68	ft	ϕ_{AB} =	34
Wall Height (low) =	3.84	ft	θ_{AB} =	90
Wall Length =	9.58	ft	δ_{AB} =	26
Plate tributary width =	0.00	ft	$(Ka)_{AB}$ =	0.27
Unit Weight of Backfill, γ_{soil} =	140.00		ϕ_{BC} =	34
Unit Weight of Conc, γ_c =	150.00		θ_{BC} =	120
Adjusted Broken Backfill β'=	4.89	deg.	δ_{BC} =	17
Wall thickness =	10.00	in	$(Ka)_{BC}$ =	0.09
Bearing Resistance, ϕq_{ult} =	15525	psf (FACTORED)		
Friction Coefficient μ =	0.54	=0.8*TAN(ϕ)	Conc Railing Wt. =	0 lb/ft
Vehicle Collision Force =	0.00	k	Location wrt Stem F.F. =	0.625 ft
Distribution Length =	8.50	ft		
Location of Collision Force =	1.50	ft (Above top of wall)		

		Dist. To Anchor	Height at Anchor	Contributary width	Anchor type	Bearing Pressure	Stability Check
Anchor #1:	L1 =	2.50 ft	6.68 ft	5.00 ft	C	2319	OK
Anchor #2:	L2 =	5.00 ft	4.67 ft	4.58 ft	C	1563	OK
Anchor #3:	L3 =	0.00 ft	0.00 ft	0.00 ft		NA	NA
Anchor #4:	L4 =	0.00 ft	0.00 ft	0.00 ft		NA	NA
Anchor #5:	L5 =	0.00 ft	0.00 ft	0.00 ft		NA	NA

Anchor Type Data

Anchor Type	Length at Bottom Anchor	Anchor End	Total	Length at Top Anchor	End	Total
	(in)	(in)	(in)	(in)	(in)	(in)
B	16	8.080	24.080	41.375	8.080	49.455
C	28	8.080	36.080	53.375	8.080	61.455
D	40	8.080	48.080	65.375	8.080	73.455
E	52	8.080	60.080	77.375	8.080	85.455
F	64	8.080	72.080	89.375	8.080	97.455
G	76	8.080	84.080	101.375	8.080	109.455
H	88	8.080	96.080	113.375	8.080	121.455

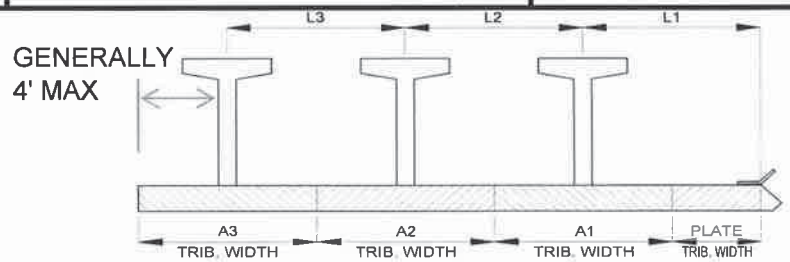

Des. By: RJA Chk. By: GSC

Project: 2016.059.009
Anchored Wingwall Design

BY: GSC 7/21/2016
CHK:

Anchor #1 Stability Check

Limit State	Str 1-a	Str 1-b	Str IV	Service	Extre-II
EH	1.50	1.50	1.50	1.00	1.50
LL/LS	1.75	1.75	0.00	1.00	0.50
EV	1.00	1.35	1.35	1.00	1.00
DC	0.90	1.25	1.50	1.00	0.90
EQ	0.00	0.00	0.00	0.00	0.00
CT	0.00	0.00	0.00	0.00	1.00
Resistance Factors					
Sliding	0.90	0.90	0.90	1.00	0.90
Bearing	0.45	0.45	0.45	0.33	0.45

Soil Properties:

Active Earth Coeff., $(Ka)_{AB}$ = 0.269
Active Earth Coeff., $(Ka)_{ABH}$ = 0.243
Active Earth Coeff., $(Ka)_{ABV}$ = 0.116
Active Earth Coeff., $(Ka)_{BC}$ = 0.092
Active Earth Coeff., $(Ka)_{BCH}$ = 0.088
Active Earth Coeff., $(Ka)_{BCV}$ = 0.027

Modification Factor = 1.00

Overturning Check:

Anchor Height = 6.67791 ft
Design Wall Height, H = 6.87 ft
Anchor Type = C
Anchor Length at Top, L_{top} = 5.12 ft
Anchor Length at Bot., L_{bot} = 3.01 ft

Back slope $\beta 1$ = 4.89 deg.

Soil Pressure:

Horizontal (kah) :
Soil Pressure at A, σ_{LL} = 0 psf
Soil Pressure at B, σ_{Bab} = 114.37 psf
Soil Pressure at B, σ_{Bbc} = 41.60 psf
Soil Pressure at C, σ_{BOT} = 91.03 psf

Vertical (kav) :
Soil Pressure at A, σ_{LL} = 0 psf
Soil Pressure at B, σ_{Bab} = 54.55 psf
Soil Pressure at B, σ_{Bbc} = -12.72 psf
Soil Pressure at C, σ_{BOT} = -27.83 psf

Driving Forces:

Force $P_{Surcharge}$ = 0 lb/ft
Moment Arm, y_1 = 3.43 ft
Overturning Moment, DM1 = 0 ft-lb/ft
Force P_{ABH} = 192 lb/ft
Moment Arm, y_2 = 4.62 ft
Overturning Moment, DM2 = 890 ft-lb/ft
Force P_{BC1H} = 166 lb/ft
Moment Arm, y_3 = 1.50 ft
Overturning Moment, DM3 = 250 ft-lb/ft
Force P_{BC2H} = 99 lb/ft
Moment Arm, y_4 = 0.83 ft
Overturning Moment, DM4 = 82 ft-lb/ft

Resisting Forces:

Weight of Wall, Ww = 835 lb/ft
Dist. From PT. O, X_1 = 0.42 ft
Resisting Moment, RM1 = 348 ft-lb/ft
Backslope Soil, I_A = 156.98 lb/ft
Dist. From PT. O, X_2 = 4.25 ft
Resisting Moment, RM2 = 667 ft-lb/ft
Soil Above Anchor, I_B = 2278 lb/ft
Dist. From PT. O, X_3 = 3.39 ft
Resisting Moment, RM3 = 7733 ft-lb/ft
Weight of Soil, II_A = 1143 lb/ft
Dist. From PT. O, X_4 = 2.000 ft
Resisting Moment, RM4 = 2287 ft-lb/ft

Des. By: RJA Chk. By: GSC

Project: 2016.059.009
Anchored Wingwall Design

BY: GSC 7/21/2016
CHK:

Anchor #1 Stability Check

Driving Forces (Con't):

Collision Force ,CT =	0	lb/ft
Moment Arm, y_5 =	8.18	ft
Overturning Moment, DM5 =	0	ft-lb/ft

Resisting Forces (Con't):

Weight of Soil, II_B =	683	lb/ft
Dist. From PT. O, X_5 =	4.096	ft
Resisting Moment, RM5 =	2798	ft-lb/ft
Force P_{ABV} =	92	lb/ft
Moment Arm, x6 =	5.95	ft
Resisting Moment, RM6 =	547	ft-lb/ft
Force P_{BC1V} =	-51	lb/ft
Moment Arm, x7 =	4.56	ft
Resisting Moment, RM7 =	-232	ft-lb/ft
Force P_{BC2V} =	-30	lb/ft
Moment Arm, x8 =	4.10	ft
Resisting Moment, RM8 =	-124	ft-lb/ft
Weight of Conc. Railing =	0	lb/ft
Moment Arm, x9 =	0.625	ft
Resisting Moment, RM9 =	0	ft-lb/ft

Location of Resultant Force:

	Str 1-a	Str 1-b	Str IV	Service	Extre-II
Overturning Moment (k-ft):	1.83	1.83	1.83	1.22	1.83
Resisting Moment (k-ft):	11.29	15.26	15.34	11.33	11.29
Vertical Loads (lb) =	4171	5661	5869	4255	4171
x (ft) =	2.27	2.37	2.30	2.37	2.27
Footing Length, B (ft) =	3.84	3.84	3.84	3.84	3.84
e (ft) =	-0.35	-0.45	-0.38	-0.45	-0.35

(note: 80% of soil weight used for overturning resist.)

Overturning Check:

1/3 B (ft) =	1.28	1.28	1.28	1.28	1.28
Is resultant within middle 2/3?	OK	OK	OK	OK	OK

Bearing Check: AASHTO 11.6.3.2

Resist. Mom. for Bearing (k-ft):	13.99	18.90	18.98	14.02	13.99
Vertical Loads for Bearing (lb) =	5024	6811	7020	5107	5024
x for bearing (ft) =	2.42	2.51	2.44	2.51	2.42
e for bearing (ft) =	-0.50	-0.59	-0.52	-0.59	-0.50
Beff (ft) =	3.14	2.94	3.08	2.93	3.14
Bearing Pressure (psf) =	1597	2319	2282	1743	1597
Bearing Resistance, ϕq_{ult} =	15525	15525	15525	5000	15525
	OK	OK	OK	OK	OK

Sliding Check:

Sliding Force (lb/ft) =	687	687	687	458	687
Sliding Resistance =	2440	3308	3409	2756	2440
	OK	OK	OK	OK	OK

Des. By: RJA Chk. By: GSC

Connection Plate Design

Assumption: Wall is more likely to slide then to rotate.

Soil Properties:

At Rest Earth Coeff., $(Ko)_{AB}$ =	0.441
At Rest Earth Coeff., $(Ko)_{ABH}$ =	0.398
At Rest Earth Coeff., $(Ko)_{ABV}$ =	0.190

Load Factors:

	(overturning & sliding)	(Bearing Pressure)
EH =	1.35	1.35
EV =	0.00	0
DC =	0.00	0
LS =	0	0

Live Load Surcharge = 0 ft

Connection Plate Locations

Wall Height =	7.68	ft
Wall Width for Plates =	0.00	ft
Plate #3, y1 from Bot of Wall Stem =	4.50	ft
Plate #2, y1 from Bot of Wall Stem =	1.50	ft
Plate #1, y1 from Bot of Wall Stem =	0	ft (input 0 if no plate #1)

(Wall does not count on plates for stability)

Tributary Wall Height for Plate #3 =	4.68	ft
Tributary Wall Height for Plate #2 =	3	ft
Tributary Wall Height for Plate #1 =	0	ft
Conn. Plate Force EH, Plate #3 =	0	lb
Conn. Plate Force EH, Plate #2 =	0	lb
Conn. Plate Force EH, Plate #1 =	0	lb
Conn. Plate Force LS, Plate #3 =	0	lb
Conn. Plate Force LS, Plate #2 =	0	lb
Conn. Plate Force LS, Plate #1 =	0	lb
Conn. Plate Force, Plate #3 Pu =	0	lb
Conn. Plate Force, Plate #2 Pu =	0	lb
Conn. Plate Force, Plate #1 Pu =	0	lb
Controlling Pu =	0.0	kips

Check Bolt / Insert Capacity

No. of Bolts Per Connection =	2		
Bolt Pu =	0.00	kips	
Bolt Pullout Capacity (ult) =	8.2875	kips	**OK**
Bolt Shear Capacity (ult) =	4.3875	kips	**OK**

Connection Plate Design

Check Bending of Plate

Moment Arm for Plate Bending =	4.5	in
Connection Plate Height(width) =	10	in
Connection Plate Thickness =	0.50	in
Connection Plate Yield Strength Fy =	36	ksi
Reduction Factor for Bending Phi =	0.9	

Factored Mu =	0.00	k-in	
S_{pl} =	0.42	in^3	
Plate Bending Stress Fult =	0.00	ksi	**OK**

Check Bending in Wall - Vertical Bars

Assumptions: 1.) Wall stem is cantileverd from anchor.
2.) Use active earth pressure because wall is free to rotate.
3.) Critical Wall section will be at maximum horizontal load, at tallest anchor section.

Modification Factor = 1

Data:

H_{max} =	6.87	ft
h_{max} =	3.37	ft
LL surcharge, V_{LS} =	0.000	ksf
γ_{soil} =	0.140	ksf
K_a =	0.27	
δ =	25.5	
f'c =	4	ksi
fy =	60	ksi
0.65 < β1 < 0.85 =	0.85	(5.7.2.2)
Vertical Bars Size:	# 5	
Spacing:	12	in
Bar Cover:	2	in

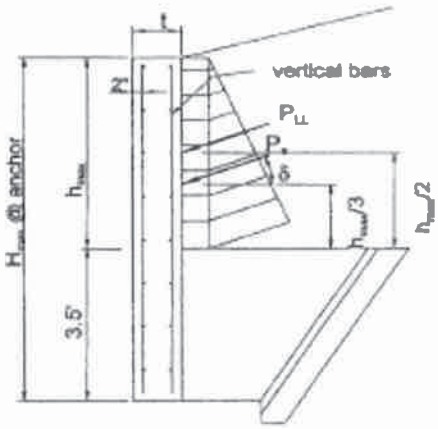

Find the horizontal load:

$$P_{soil} = (1/2)\gamma_S K_A h_{max}^2 (\cos\delta) = \quad 0.19 \text{ kip/ft}$$
$$P_{LS} = \sigma_{LS} K_A h_{max} (\cos\delta) = \quad 0.00 \text{ kip/ft}$$
CT = 0.00 kip/ft

Factored Loads:

	Str 1-a	Service	Extre-II
Mu	0.32	0.22	0.32
Vu	0.29	0.19	0.29

Moment Capacity:

As prov. :	0.307	in^2
d (in):	7.69	d = t - 2.0" cov. - 1/2 Bar Φ
a (in):	0.451	a=As*fy/(0.85*b*f'c)
c (in):	0.531	c=a/β1
ϕMn (kip-ft):	**10.30**	ϕMn = ϕ_M*As*fy*(d-a/2)/12
ϕ_M =	0.90	

(ϕ_M=0.75+0.15[(ε_t-ε_{cl})/(ε_{tl}-ε_{cl})], 0.75min, 0.9max, 5.5.4.2.1-2)

ϕMn > Mu **OK!**

Shear Capacity Check

ϕVn (kip): **10.49** ϕVn = 0.90*β*√f'c*b*d

β = 2.00

ϕVn > Vu **OK!**

Check Min. Reinforcement:

fr = .24 * √f'c = 0.48 ksi (5.4.2.6)

S = $bt^2/6$ = 200 in3

Flex. cracking var. fac. (Other Con. Strs.) 1.60 γ_1

A615, Gr. 60 Reinforcement (Carbon steel) 0.67 γ_3

Mcr = γ_3 * [(γ_1 * fr)*S] = 8.58 kip-ft (5.7.3.3.2)

Mr = ϕMn > (lesser of Mcr or 1.33 Mu)

Mcr = 8.58 kip-ft

1.33 * Mu = 0.43 kip-ft

Mr = ϕMn = 10.30 kip-ft **OK**

Crack Control Check

Ma = 0.22 **kip-ft/ft**

$E_c = 1820 \bullet \sqrt{f'c}$ = 3640ksi

E_s = 29000ksi dc= 2.31in

γe= 0.75

$n = E_s / E_c$ = 7.97

ρn = 0.026496

$k = \sqrt{2\rho n + \rho n^2} - \rho n$ = 0.205

$j = 1 - (k/3)$ = 0.932

$f_s = (M)/(A_s jd)$ = 1.18 ksi

Bs= 1+dc/(0.7*(h-dc))= 1.43

max spa ≤ [(700γe) / (βsfs)] - 2dc = 307 in **OK!**

Check Type C Anchor Attachment

Assumptions: 1.) Only top three connection bars, represented by T1, T2 & T3 in sketch below, will resist tension.
2.) Assume min. steel will control, design for 1.33 Mu (See ART. 5.7.3.3.2)

Anchor #1 $M_{D\,EH}$=	6.11	kip-ft	Anchor #1 $M_{D\,LS}$=	0.00	kip-ft
Anchor #2 $M_{D\,EH}$=	1.41	kip-ft	Anchor #2 $M_{D\,LS}$=	0.00	kip-ft
Anchor #3 $M_{D\,EH}$=	0.00	kip-ft	Anchor #3 $M_{D\,LS}$=	0.00	kip-ft
Anchor #1 $M_{D\,CT}$=	0.00	kip-ft	Anchor #1 1 Mod. Factor =	1.00	
Anchor #2 $M_{D\,CT}$=	0.00	kip-ft	Anchor #2 1 Mod. Factor =	1.00	
Anchor #3 $M_{D\,CT}$=	0.00	kip-ft	Anchor #3 1 Mod. Factor =	0.00	

Data:

f'c =	4	ksi
fy =	60	ksi
0.65 < β1 < 0.85 =	0.85	(5.7.2.2)
Connection Bars Size:	# 5	

Factored Loads:

	Str 1-a	Service	Extre-II
Anchor #1 Mu (k-ft) =	9.16	6.108	9.1621
Anchor #2 Mu (k-ft) =	2.12	1.4102	2.1154
Anchor #3 Mu (k-ft) =	0.00	0	0
1.33 Mu =	12.19		

Moment Capacity:

As prov. :	1.227	in^2	(4 Bars)
d (in):	30.00		
b (in):	6.00		
a (in):	3.609	a=As*fy/(0.85*b*f'c)	
c (in):	4.246	c=a/β1	
ϕMn (kip-ft):	**155.70**	ϕMn = ϕ_M*As*fy*(d-a/2)/12	
ϕ_M =	0.90		

(ϕ_M=0.75+0.15[(ε_t-ε_{cl})/(ε_{tl}-ε_{cl})], 0.75min, 0.9max, 5.5.4.2.1-2)

ϕMn > Mu **OK!**

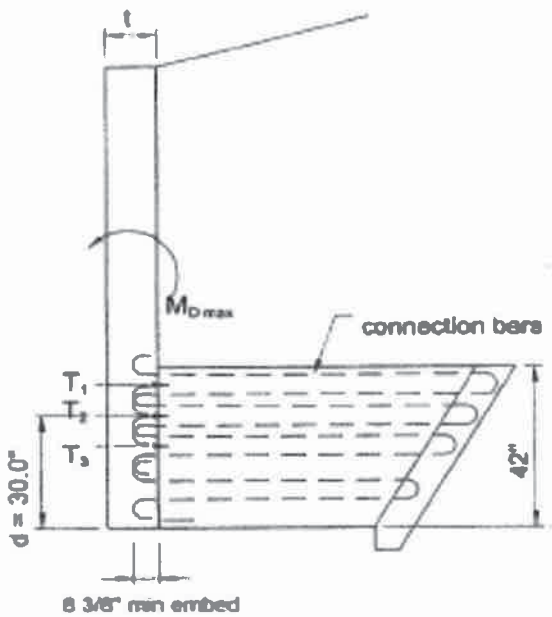

Check Hook Development:

db (in): 0.625

ART 5.11.2.4

L_{hb} (in):	11.88	<-- Controls
or		
8db (in):	5.00	
or		
6in min:	6.00	

L_{dh} (in): 6.00 =(0.8)L_{hb} x A,req'd/As,pro'd

Project: 2016.059.009 BY: GSC 7/21/2016
Anchored Wingwall Design CHK:

Controling Wall	WW3	
Backfill Slope perp to road	4	:1
Wingwall Angle $\Theta_1 + \Theta_2 =$	25	deg (with respect to slope, not road)
Effective Backfill Slope	6.03	deg
Rise to level grade	12.56	ft
Stem projection above grade	3	in.
Surcharge	0	ft

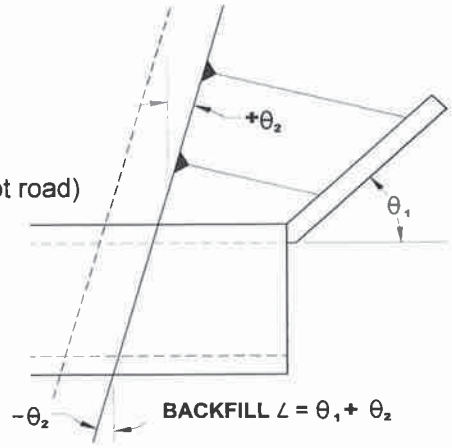

Wingwall Stability Check:

Wall Height (high) =	7.24	ft	ϕ_{AB} =	34
Wall Height (low) =	4.16	ft	θ_{AB} =	90
Wall Length =	6.93	ft	δ_{AB} =	26
Plate tributary width =	1.50	ft	$(Ka)_{AB}$ =	0.27
Unit Weight of Backfill, γ_{soil} =	140.00		ϕ_{BC} =	34
Unit Weight of Conc, γ_c =	150.00		θ_{BC} =	120
Adjusted Broken Backfill β'=	6.03	deg.	δ_{BC} =	17
Wall thickness =	10.00	in	$(Ka)_{BC}$ =	0.09
Bearing Resistance, ϕq_{ult} =	15525	psf (FACTORED)		
Friction Coefficient μ =	0.54	=0.8*TAN(ϕ)	Conc Railing Wt. =	0 lb/ft
Vehicle Collision Force =	0.00	k	Location wrt Stem F.F. =	0.625 ft
Distribution Length =	8.50	ft		
Location of Collision Force =	1.50	ft (Above top of wall)		

		Dist. To Anchor	Height at Anchor	Contributary width	Anchor type	Bearing Pressure	Stability Check
Anchor #1:	L1 =	4.67 ft	5.16 ft	5.75 ft	C	1696	OK
Anchor #2:	L2 =	0.00 ft	0.00 ft	0.00 ft		NA	NA
Anchor #3:	L3 =	0.00 ft	0.00 ft	0.00 ft		NA	NA
Anchor #4:	L4 =	0.00 ft	0.00 ft	0.00 ft		NA	NA
Anchor #5:	L5 =	0.00 ft	0.00 ft	0.00 ft		NA	NA

Anchor Type Data

Anchor Type	Length at Bottom Anchor	Anchor End	Total	Length at Top Anchor	End	Total
	(in)	(in)	(in)	(in)	(in)	(in)
B	16	8.080	24.080	41.375	8.080	49.455
C	28	8.080	36.080	53.375	8.080	61.455
D	40	8.080	48.080	65.375	8.080	73.455
E	52	8.080	60.080	77.375	8.080	85.455
F	64	8.080	72.080	89.375	8.080	97.455
G	76	8.080	84.080	101.375	8.080	109.455
H	88	8.080	96.080	113.375	8.080	121.455

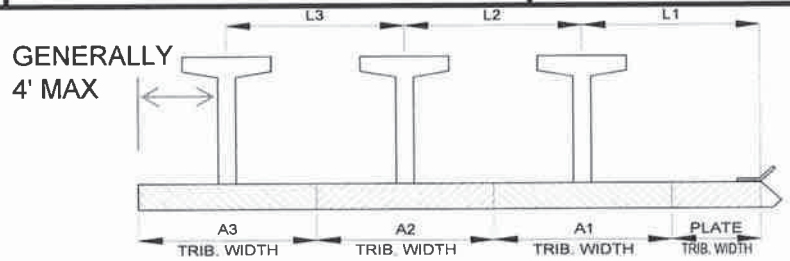

Des. By: RJA Chk. By: GSC

Project: 2016.059.009
Anchored Wingwall Design

BY: GSC 7/21/2016
CHK:

Anchor #1 Stability Check

Limit State	Str 1-a	Str 1-b	Str IV	Service	Extre-II
EH	1.50	1.50	1.50	1.00	1.50
LL/LS	1.75	1.75	0.00	1.00	0.50
EV	1.00	1.35	1.35	1.00	1.00
DC	0.90	1.25	1.50	1.00	0.90
EQ	0.00	0.00	0.00	0.00	0.00
CT	0.00	0.00	0.00	0.00	1.00
Resistance Factors					
Sliding	0.90	0.90	0.90	1.00	0.90
Bearing	0.45	0.45	0.45	0.33	0.45

Soil Properties:

Active Earth Coeff., $(Ka)_{AB}$ = 0.273
Active Earth Coeff., $(Ka)_{ABH}$ = 0.246
Active Earth Coeff., $(Ka)_{ABV}$ = 0.117
Active Earth Coeff., $(Ka)_{BC}$ = 0.093
Active Earth Coeff., $(Ka)_{BCH}$ = 0.089
Active Earth Coeff., $(Ka)_{BCV}$ = 0.027

Modification Factor = 0.96

Overturning Check:

Anchor Height = 5.16444 ft
Design Wall Height, H = 5.46 ft
Anchor Type = C
Anchor Length at Top, L_{top} = 5.12 ft
Anchor Length at Bot., L_{bot} = 3.01 ft

Back slope $\beta 1$ = 6.03 deg.

Soil Pressure:

Horizontal (kah) :
Soil Pressure at A, σ_{LL} = 0 psf
Soil Pressure at B, σ_{Bab} = 67.39 psf
Soil Pressure at B, σ_{Bbc} = 24.39 psf
Soil Pressure at C, σ_{BOT} = 74.28 psf

Vertical (kav) :
Soil Pressure at A, σ_{LL} = 0 psf
Soil Pressure at B, σ_{Bab} = 32.14 psf
Soil Pressure at B, σ_{Bbc} = -7.46 psf
Soil Pressure at C, σ_{BOT} = -22.71 psf

Driving Forces:

Force $P_{Surcharge}$ = 0 lb/ft
Moment Arm, y_1 = 2.73 ft
Overturning Moment, DM1 = 0 ft-lb/ft
Force P_{ABH} = 66 lb/ft
Moment Arm, y_2 = 4.15 ft
Overturning Moment, DM2 = 274 ft-lb/ft
Force P_{BC1H} = 98 lb/ft
Moment Arm, y_3 = 1.50 ft
Overturning Moment, DM3 = 146 ft-lb/ft
Force P_{BC2H} = 100 lb/ft
Moment Arm, y_4 = 0.83 ft
Overturning Moment, DM4 = 83 ft-lb/ft

Resisting Forces:

Weight of Wall, Ww = 646 lb/ft
Dist. From PT. O, X_1 = 0.42 ft
Resisting Moment, RM1 = 269 ft-lb/ft
Backslope Soil, I_A = 193.97 lb/ft
Dist. From PT. O, X_2 = 4.25 ft
Resisting Moment, RM2 = 824 ft-lb/ft
Soil Above Anchor, I_B = 1193 lb/ft
Dist. From PT. O, X_3 = 3.39 ft
Resisting Moment, RM3 = 4050 ft-lb/ft
Weight of Soil, II_A = 1143 lb/ft
Dist. From PT. O, X_4 = 2.000 ft
Resisting Moment, RM4 = 2287 ft-lb/ft

Des. By: RJA Chk. By: GSC

Anchor #1 Stability Check

Driving Forces (Con't):

Collision Force ,CT =	0	lb/ft
Moment Arm, y_5 =	6.66	ft
Overturning Moment, DM5 =	0	ft-lb/ft

Resisting Forces (Con't):

Weight of Soil, W_B =	683	lb/ft
Dist. From PT. O, X_5 =	4.096	ft
Resisting Moment, RM5 =	2798	ft-lb/ft
Force P_{ABV} =	31	lb/ft
Moment Arm, x6 =	5.95	ft
Resisting Moment, RM6 =	187	ft-lb/ft
Force P_{BC1V} =	-30	lb/ft
Moment Arm, x7 =	4.56	ft
Resisting Moment, RM7 =	-136	ft-lb/ft
Force P_{BC2V} =	-31	lb/ft
Moment Arm, x8 =	4.10	ft
Resisting Moment, RM8 =	-125	ft-lb/ft
Weight of Conc. Railing =	0	lb/ft
Moment Arm, x9 =	0.625	ft
Resisting Moment, RM9 =	0	ft-lb/ft

Location of Resultant Force:

	Str 1-a	Str 1-b	Str IV	Service	Extre-II
Overturning Moment (k-ft):	0.75	0.75	0.75	0.50	0.75
Resisting Moment (k-ft):	7.79	10.53	10.60	7.82	7.79
Vertical Loads (lb) =	3013	4090	4251	3077	3013
x (ft) =	2.34	2.39	2.32	2.38	2.34
Footing Length, B (ft) =	3.84	3.84	3.84	3.84	3.84
e (ft) =	-0.42	-0.47	-0.40	-0.46	-0.42

(note: 80% of soil weight used for overturning resist.)

Overturning Check:

1/3 B (ft) =	1.28	1.28	1.28	1.28	1.28
Is resultant within middle 2/3?	OK	OK	OK	OK	OK

Bearing Check: AASHTO 11.6.3.2

Resist. Mom. for Bearing (k-ft):	9.70	13.10	13.17	9.72	9.70
Vertical Loads for Bearing (lb) =	3627	4919	5081	3692	3627
x for bearing (ft) =	2.47	2.51	2.44	2.50	2.47
e for bearing (ft) =	-0.55	-0.59	-0.52	-0.58	-0.55
Beff (ft) =	3.01	2.90	3.05	2.93	3.01
Bearing Pressure (psf) =	1206	1696	1666	1262	1206
Bearing Resistance, ϕq_{ult} =	15525	15525	15525	3000	15525
	OK	OK	OK	OK	OK

Sliding Check:

Sliding Force (lb/ft) =	395	395	395	263	395
Sliding Resistance =	1762	2389	2468	1992	1762
	OK	OK	OK	OK	OK

Connection Plate Design

Assumption: Wall is more likely to slide then to rotate.

Soil Properties:		**Load Factors:**	(overturning & sliding)	(Bearing Pressure)
At Rest Earth Coeff., $(Ko)_{AB}$ =	0.441	EH =	1.35	1.35
At Rest Earth Coeff., $(Ko)_{ABH}$ =	0.398	EV =	0.00	0
At Rest Earth Coeff., $(Ko)_{ABV}$ =	0.190	DC =	0.00	0
		LS =	0	0

Live Load Surcharge = 0 ft

Connection Plate Locations

Wall Height =	7.24	ft
Wall Width for Plates =	1.50	ft
Plate #3, y1 from Bot of Wall Stem =	4.50	ft
Plate #2, y1 from Bot of Wall Stem =	1.50	ft
Plate #1, y1 from Bot of Wall Stem =	0	ft (input 0 if no plate #1)

Tributary Wall Height for Plate #3 =	4.24	ft
Tributary Wall Height for Plate #2 =	3	ft
Tributary Wall Height for Plate #1 =	0	ft
Conn. Plate Force EH, Plate #3 =	751	lb
Conn. Plate Force EH, Plate #2 =	1439	lb
Conn. Plate Force EH, Plate #1 =	0	lb
Conn. Plate Force LS, Plate #3 =	0	lb
Conn. Plate Force LS, Plate #2 =	0	lb
Conn. Plate Force LS, Plate #1 =	0	lb
Conn. Plate Force, Plate #3 Pu =	1014	lb
Conn. Plate Force, Plate #2 Pu =	1942	lb
Conn. Plate Force, Plate #1 Pu =	0	lb
Controlling Pu =	1.9	kips

Check Bolt / Insert Capacity

No. of Bolts Per Connection =	2		
Bolt Pu =	0.97	kips	
Bolt Pullout Capacity (ult) =	8.2875	kips	**OK**
Bolt Shear Capacity (ult) =	4.3875	kips	**OK**

Connection Plate Design

Check Bending of Plate

Moment Arm for Plate Bending =	4.5	in
Connection Plate Height(width) =	10	in
Connection Plate Thickness =	0.50	in
Connection Plate Yield Strength Fy =	36	ksi
Reduction Factor for Bending Phi =	0.9	

Factored Mu =	8.74	k-in	
S_{pl} =	0.42	in^3	
Plate Bending Stress Fult =	20.98	ksi	**OK**

Check Bending in Wall - Vertical Bars

Assumptions: 1.) Wall stem is cantileverd from anchor.
2.) Use active earth pressure because wall is free to rotate.
3.) Critical Wall section will be at maximum horizontal load, at tallest anchor section.

Modification Factor = 0.956522

Data:

H_{max} =	5.46	ft
h_{max} =	1.96	ft
LL surcharge, V_{LS} =	0.000	ksf
γ_{soil} =	0.140	ksf
K_a =	0.27	
δ =	25.5	
f'c =	4	ksi
fy =	60	ksi
0.65 < β1 < 0.85 =	0.85	(5.7.2.2)
Vertical Bars Size:	# 5	
Spacing:	12	in
Bar Cover:	2	in

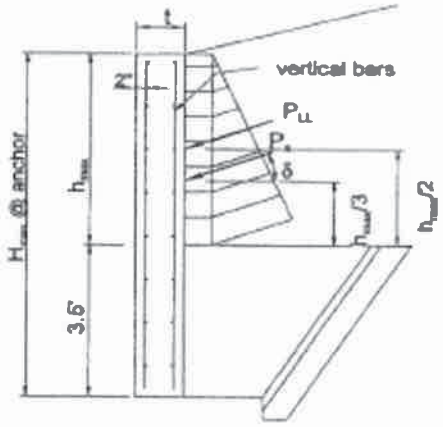

Find the horizontal load:

$$P_{soil} = (1/2)\gamma_S K_A h_{max}^2 (\cos\delta) = \quad 0.07 \text{ kip/ft}$$

$$P_{LS} = \sigma_{LS} K_A h_{max} (\cos\delta) = \quad 0.00 \text{ kip/ft}$$

CT = 0.00 kip/ft

Factored Loads:

	Str 1-a	Service	Extre-II
Mu	0.07	0.04	0.07
Vu	0.10	0.07	0.10

Moment Capacity:

As prov. :	0.307	in^2
d (in):	7.69	d = t - 2.0" cov. - 1/2 Bar Φ
a (in):	0.451	a=As*fy/(0.85*b*f'c)
c (in):	0.531	c=a/β1
ϕMn (kip-ft):	**10.30**	ϕMn = ϕ_M*As*fy*(d-a/2)/12
ϕ_M =	0.90	

(ϕ_M=0.75+0.15[(ε_t-ε_{cl})/(ε_{tl}-ε_{cl})], 0.75min, 0.9max, 5.5.4.2.1-2)

ϕMn > Mu **OK!**

Shear Capacity Check

ϕVn (kip): **10.49** ϕVn = 0.90*β*√f'c*b*d

β = 2.00

ϕVn > Vu **OK!**

Check Min. Reinforcement:

fr = .24 * √f'c = 0.48 ksi (5.4.2.6)

S = $bt^2/6$ = 200 in3

Flex. cracking var. fac. (Other Con. Strs.) 1.60 γ_1

A615, Gr. 60 Reinforcement (Carbon steel) 0.67 γ_3

Mcr = γ_3 * [(γ_1 * fr)*S] = 8.58 kip-ft (5.7.3.3.2)

Mr = ϕMn > (lesser of Mcr or 1.33 Mu)

Mcr = 8.58 kip-ft

1.33 * Mu = 0.09 kip-ft

Mr = ϕMn = 10.30 kip-ft **OK**

Crack Control Check

Ma = 0.04 **kip-ft/ft**

$E_c = 1820 \bullet \sqrt{f'c} =$ 3640ksi

$E_s =$ 29000ksi dc= 2.31in

γe= 0.75

$n = E_s / E_c =$ 7.97

ρn = 0.026496

$k = \sqrt{2\rho n + \rho n^2} - \rho n =$ 0.205

$j = 1 - (k/3) =$ 0.932

$f_s = (M)/(A_s jd) =$ 0.25 ksi

Bs= 1+dc/(0.7*(h-dc))= 1.43

max spa ≤ [(700γe) / (βsfs)] - 2dc = 1493 in **OK!**

Check Type C Anchor Attachment

Assumptions: 1.) Only top three connection bars, represented by T1, T2 & T3 in sketch below, will resist tension.
2.) Assume min. steel will control, design for 1.33 Mu (See ART. 5.7.3.3.2)

Anchor #1 $M_{D\,EH}$=	2.89	kip-ft	Anchor #1 $M_{D\,LS}$=	0.00	kip-ft
Anchor #2 $M_{D\,EH}$=	0.00	kip-ft	Anchor #2 $M_{D\,LS}$=	0.00	kip-ft
Anchor #3 $M_{D\,EH}$=	0.00	kip-ft	Anchor #3 $M_{D\,LS}$=	0.00	kip-ft
Anchor #1 $M_{D\,CT}$=	0.00	kip-ft	Anchor #1 1 Mod. Factor =	0.96	
Anchor #2 $M_{D\,CT}$=	0.00	kip-ft	Anchor #2 1 Mod. Factor =	0.00	
Anchor #3 $M_{D\,CT}$=	0.00	kip-ft	Anchor #3 1 Mod. Factor =	0.00	

Data:

f'c =	4	ksi
fy =	60	ksi
0.65 < β1 < 0.85 =	0.85	(5.7.2.2)
Connection Bars Size:	# 5	

Factored Loads:

	Str 1-a	Service	Extre-II
Anchor #1 Mu (k-ft) =	4.54	3.0241	4.5362
Anchor #2 Mu (k-ft) =	0.00	0	0
Anchor #3 Mu (k-ft) =	0.00	0	0
1.33 Mu =	6.03		

Moment Capacity:

As prov. :	1.227	in^2	(4 Bars)
d (in):	30.00		
b (in):	6.00		
a (in):	3.609	a=As*fy/(0.85*b*f'c)	
c (in):	4.246	c=a/β1	
ϕMn (kip-ft):	**155.70**	$\phi Mn = \phi_M * As*fy*(d-a/2)/12$	
ϕ_M =	0.90		

(ϕ_M=0.75+0.15[(ε_t-ε_{cl})/(ε_{tl}-ε_{cl})], 0.75min, 0.9max, 5.5.4.2.1-2)

ϕMn > Mu **OK!**

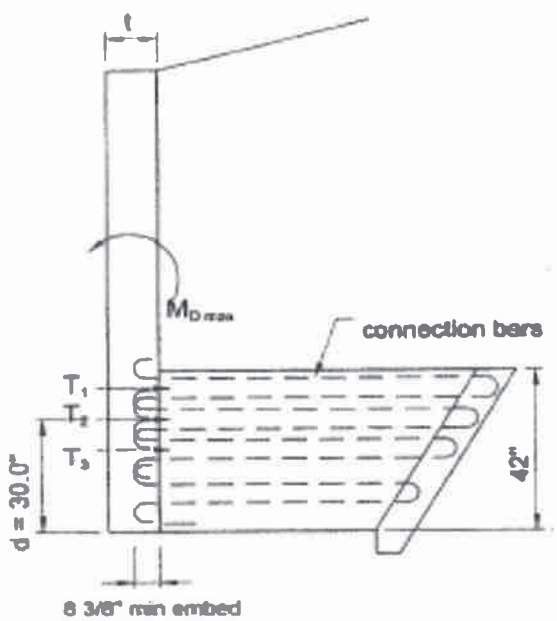

Check Hook Development:

db (in): 0.625

ART 5.11.2.4

L_{hb} (in):	11.88	<-- Controls
or		
8db (in):	5.00	
or		
6in min:	6.00	

L_{dh} (in): 6.00 =(0.8)L_{hb} x A,req'd/As,pro'd

Project: 2016.059.009 BY: GSC 7/21/2016
Anchored Wingwall Design CHK:

Controling Wall	WW4	
Backfill Slope perp to road	2	:1
Wingwall Angle $\Theta_1 + \Theta_2 =$	80	deg (with respect to slope, not road)
Effective Backfill Slope	26.22	deg
Rise to level grade	4.62	ft
Stem projection above grade	3	in.
Surcharge	2	ft ✓

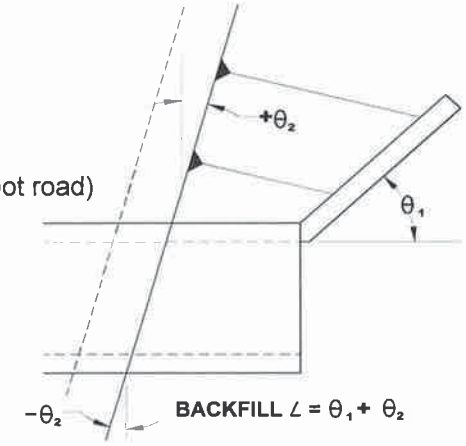

Wingwall Stability Check:

Wall Height (high) =	12.68	ft ✓	ϕ_{AB} =	34
Wall Height (low) =	8.34	ft	θ_{AB} =	90
Wall Length =	29.78	ft	δ_{AB} =	26
Plate tributary width =	0.00	ft	$(Ka)_{AB}$ =	0.29
Unit Weight of Backfill, γ_{soil} =	140.00		ϕ_{BC} =	34
Unit Weight of Conc, γ_c =	150.00		θ_{BC} =	120
Adjusted Broken Backfill β'=	11.44	deg.	δ_{BC} =	17
Wall thickness =	10.00	in	$(Ka)_{BC}$ =	0.10
Bearing Resistance, ϕq_{ult} =	15525	psf (FACTORED)		
Friction Coefficient μ =	0.54	=0.8*TAN(ϕ)	Conc Railing Wt. =	0 lb/ft
Vehicle Collision Force =	0.00	k	Location wrt Stem F.F. =	0.625 ft
Distribution Length =	8.50	ft		
Location of Collision Force =	1.50	ft (Above top of wall)		

		Dist. To Anchor	Height at Anchor	Contributary width	Anchor type	Bearing Pressure		Stability Check
Anchor #1:	L1 =	2.50 ft	12.32 ft	5.00 ft	F	7087	OK	
Anchor #2:	L2 =	5.00 ft	11.59 ft	5.00 ft	F	5720	OK	
Anchor #3:	L3 =	5.00 ft	10.86 ft	5.00 ft	E	7034	OK	
Anchor #4:	L4 =	0.00 ft	0.00 ft	0.00 ft		NA		#N/A
Anchor #5:	L5 =	0.00 ft	0.00 ft	0.00 ft		NA		#N/A

Anchor Type Data

Anchor Type	Length at Bottom Anchor	Anchor End	Total	Length at Top Anchor	End	Total
	(in)	(in)	(in)	(in)	(in)	(in)
B	16	8.080	24.080	41.375	8.080	49.455
C	28	8.080	36.080	53.375	8.080	61.455
D	40	8.080	48.080	65.375	8.080	73.455
E	52	8.080	60.080	77.375	8.080	85.455
F	64	8.080	72.080	89.375	8.080	97.455
G	76	8.080	84.080	101.375	8.080	109.455
H	88	8.080	96.080	113.375	8.080	121.455

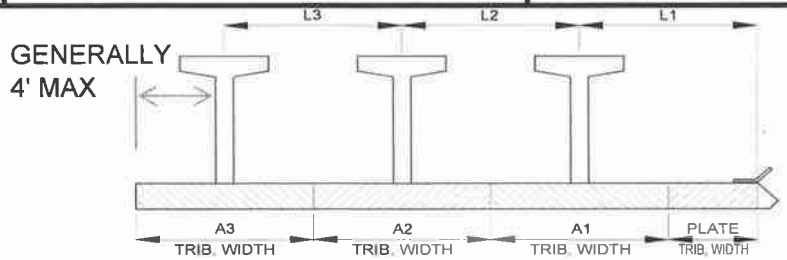

Des. By: RJA Chk. By: GSC

Project: 2016.059.009
Anchored Wingwall Design

BY: GSC 7/21/2016
CHK:

Anchor #1 Stability Check

Limit State	Str 1-a	Str 1-b	Str IV	Service	Extre-II
EH	1.50	1.50	1.50	1.00	1.50
LL/LS	1.75	1.75	0.00	1.00	0.50
EV	1.00	1.35	1.35	1.00	1.00
DC	0.90	1.25	1.50	1.00	0.90
EQ	0.00	0.00	0.00	0.00	0.00
CT	0.00	0.00	0.00	0.00	1.00
Resistance Factors					
Sliding	0.90	0.90	0.90	1.00	0.90
Bearing	0.45	0.45	0.45	0.33	0.45

Soil Properties:

Active Earth Coeff., $(Ka)_{AB}$ = 0.293
Active Earth Coeff., $(Ka)_{ABH}$ = 0.265
Active Earth Coeff., $(Ka)_{ABV}$ = 0.126
Active Earth Coeff., $(Ka)_{BC}$ = 0.098
Active Earth Coeff., $(Ka)_{BCH}$ = 0.094
Active Earth Coeff., $(Ka)_{BCV}$ = 0.029

Modification Factor = 1.00

Overturning Check:

Anchor Height = 12.3157 ft
Design Wall Height, H = 16.06 ft
Anchor Type = F
Anchor Length at Top, L_{top} = 8.12 ft
Anchor Length at Bot., L_{bot} = 6.01 ft

Back slope $\beta 1$ = 26.22 deg.

Soil Pressure:

Horizontal (kah) :

Soil Pressure at A, σ_{LL} = 82 psf
Soil Pressure at B, σ_{Bab} = 465.67 psf
Soil Pressure at B, σ_{Bbc} = 164.69 psf
Soil Pressure at C, σ_{BOT} = 217.12 psf

Vertical (kav) :

Soil Pressure at A, σ_{LL} = 0 psf
Soil Pressure at B, σ_{Bab} = 222.11 psf
Soil Pressure at B, σ_{Bbc} = -50.35 psf
Soil Pressure at C, σ_{BOT} = -66.38 psf

Driving Forces:

Force $P_{Surcharge}$ = 1319 lb/ft
Moment Arm, y_1 = 8.03 ft
Overturning Moment, DM1 = 10597 ft-lb/ft
Force P_{ABH} = 2925 lb/ft
Moment Arm, y_2 = 7.69 ft
Overturning Moment, DM2 = 22492 ft-lb/ft
Force P_{BC1H} = 659 lb/ft
Moment Arm, y_3 = 1.50 ft
Overturning Moment, DM3 = 988 ft-lb/ft
Force P_{BC2H} = 105 lb/ft
Moment Arm, y_4 = 0.83 ft
Overturning Moment, DM4 = 87 ft-lb/ft

Resisting Forces:

Weight of Wall, Ww = 1539 lb/ft
Dist. From PT. O, X_1 = 0.42 ft
Resisting Moment, RM1 = 641 ft-lb/ft
Backslope Soil, I_A = 2273.34 lb/ft
Dist. From PT. O, X_2 = 6.25 ft
Resisting Moment, RM2 = 14203 ft-lb/ft
Soil Above Anchor, I_B = 10023 lb/ft
Dist. From PT. O, X_3 = 4.89 ft
Resisting Moment, RM3 = 49053 ft-lb/ft
Weight of Soil, II_A = 2613 lb/ft
Dist. From PT. O, X_4 = 3.500 ft
Resisting Moment, RM4 = 9146 ft-lb/ft

Des. By: RJA Chk. By: GSC

Project: 2016.059.009
Anchored Wingwall Design

BY: GSC 7/21/2016
CHK:

Anchor #1 Stability Check

Driving Forces (Con't):

Collision Force ,CT =	0	lb/ft
Moment Arm, y_5 =	13.82	ft
Overturning Moment, DM5 =	0	ft-lb/ft

Resisting Forces (Con't):

Weight of Soil, W_B =	683	lb/ft
Dist. From PT. O, X_5 =	7.096	ft
Resisting Moment, RM5 =	4847	ft-lb/ft
Force P_{ABV} =	1395	lb/ft
Moment Arm, x6 =	8.95	ft
Resisting Moment, RM6 =	12495	ft-lb/ft
Force P_{BC1V} =	-201	lb/ft
Moment Arm, x7 =	7.56	ft
Resisting Moment, RM7 =	-1523	ft-lb/ft
Force P_{BC2V} =	-32	lb/ft
Moment Arm, x8 =	7.10	ft
Resisting Moment, RM8 =	-227	ft-lb/ft
Weight of Conc. Railing =	0	lb/ft
Moment Arm, x9 =	0.625	ft
Resisting Moment, RM9 =	0	ft-lb/ft

Location of Resultant Force:

	Str 1-a	Str 1-b	Str IV	Service	Extre-II
Overturning Moment (k-ft):	53.90	53.90	35.35	34.16	40.65
Resisting Moment (k-ft):	73.12	98.74	98.90	73.19	73.12
Vertical Loads (lb) =	15022	20333	20718	15176	15022
x (ft) =	1.28	2.21	3.07	2.57	2.16
Footing Length, B (ft) =	6.84	6.84	6.84	6.84	6.84
e (ft) =	2.14	1.21	0.35	0.85	1.26

(note: 80% of soil weight used for overturning resist.)

Overturning Check:

1/3 B (ft) =	2.28	2.28	2.28	2.28	2.28
Is resultant within middle 2/3?	OK	OK	OK	OK	OK

Bearing Check: AASHTO 11.6.3.2

Resist. Mom. for Bearing (k-ft):	88.57	119.59	119.75	88.64	88.57
Vertical Loads for Bearing (lb) =	18140	24543	24928	18294	18140
x for bearing (ft) =	1.91	2.68	3.39	2.98	2.64
e for bearing (ft) =	1.51	0.74	0.03	0.44	0.78
Beff (ft) =	2.56	4.41	6.13	5.14	4.32
Bearing Pressure (psf) =	7087	5565	4064	3557	4196
Bearing Resistance, ϕq_{ult} =	15525	15525	15525	5000	15525
	OK	OK	OK	OK	OK

Sliding Check:

Sliding Force (lb/ft) =	7842	7842	5534	5008	6193
Sliding Resistance =	8810	11919	12106	9872	8810
	OK	OK	OK	OK	OK

Des. By: RJA Chk. By: GSC

Anchor #2 Stability Check

Limit State	Str 1-a	Str 1-b	Str IV	Service	Extre-II
EH	1.50	1.50	1.50	1.00	1.50
LL/LS	1.75	1.75	0.00	1.00	0.50
EV	1.00	1.35	1.35	1.00	1.00
DC	0.90	1.25	1.50	1.00	0.90
EQ	0.00	0.00	0.00	0.00	0.00
CT	0.00	0.00	0.00	0.00	1.00
Resistance Factors					
Sliding	0.90	0.90	0.90	1.00	0.90
Bearing	0.45	0.45	0.45	0.33	0.45

Soil Properties:

Active Earth Coeff., $(Ka)_{AB}$ = 0.293
Active Earth Coeff., $(Ka)_{ABH}$ = 0.265
Active Earth Coeff., $(Ka)_{ABV}$ = 0.126
Active Earth Coeff., $(Ka)_{BC}$ = 0.098
Active Earth Coeff., $(Ka)_{BCH}$ = 0.094
Active Earth Coeff., $(Ka)_{BCV}$ = 0.029

Modification Factor = 1.00

Overturning Check:

Anchor Height = 11.587 ft
Design Wall Height, H = 15.34 ft
Anchor Type = F
Anchor Length at Top, L_{top} = 8.12 ft
Anchor Length at Bot., L_{bot} = 6.01 ft

Back slope $\beta 1$ = 26.22 deg.

Soil Pressure:

Horizontal (kah) :

Soil Pressure at A, σ_{LL} = 82 psf
Soil Pressure at B, σ_{Bab} = 438.67 psf
Soil Pressure at B, σ_{Bbc} = 155.14 psf
Soil Pressure at C, σ_{BOT} = 207.57 psf

Vertical (kav) :

Soil Pressure at A, σ_{LL} = 0 psf
Soil Pressure at B, σ_{Bab} = 209.23 psf
Soil Pressure at B, σ_{Bbc} = -47.43 psf
Soil Pressure at C, σ_{BOT} = -63.46 psf

Driving Forces:

Force $P_{Surcharge}$ = 1259 lb/ft
Moment Arm, y_1 = 7.67 ft
Overturning Moment, DM1 = 9657 ft-lb/ft
Force P_{ABH} = 2596 lb/ft
Moment Arm, y_2 = 7.45 ft
Overturning Moment, DM2 = 19328 ft-lb/ft
Force P_{BC1H} = 621 lb/ft
Moment Arm, y_3 = 1.50 ft
Overturning Moment, DM3 = 931 ft-lb/ft
Force P_{BC2H} = 105 lb/ft
Moment Arm, y_4 = 0.83 ft
Overturning Moment, DM4 = 87 ft-lb/ft

Resisting Forces:

Weight of Wall, Ww = 1448 lb/ft
Dist. From PT. O, X_1 = 0.42 ft
Resisting Moment, RM1 = 603 ft-lb/ft
Backslope Soil, I_A = 2273.34 lb/ft
Dist. From PT. O, X_2 = 6.25 ft
Resisting Moment, RM2 = 14203 ft-lb/ft
Soil Above Anchor, I_B = 9195 lb/ft
Dist. From PT. O, X_3 = 4.89 ft
Resisting Moment, RM3 = 44998 ft-lb/ft
Weight of Soil, II_A = 2613 lb/ft
Dist. From PT. O, X_4 = 3.500 ft
Resisting Moment, RM4 = 9146 ft-lb/ft

Anchor #2 Stability Check

Driving Forces (Con't):

Collision Force ,CT =	0	lb/ft
Moment Arm, y_5 =	13.09	ft
Overturning Moment, DM5 =	0	ft-lb/ft

Resisting Forces (Con't):

Weight of Soil, W_B =	683	lb/ft
Dist. From PT. O, X_5 =	7.096	ft
Resisting Moment, RM5 =	4847	ft-lb/ft
Force P_{ABV} =	1238	lb/ft
Moment Arm, x6 =	8.95	ft
Resisting Moment, RM6 =	11088	ft-lb/ft
Force P_{BC1V} =	-190	lb/ft
Moment Arm, x7 =	7.56	ft
Resisting Moment, RM7 =	-1434	ft-lb/ft
Force P_{BC2V} =	-32	lb/ft
Moment Arm, x8 =	7.10	ft
Resisting Moment, RM8 =	-227	ft-lb/ft
Weight of Conc. Railing =	0	lb/ft
Moment Arm, x9 =	0.625	ft
Resisting Moment, RM9 =	0	ft-lb/ft

Location of Resultant Force:

	Str 1-a	Str 1-b	Str IV	Service	Extre-II
Overturning Moment (k-ft):	47.42	47.42	30.52	30.00	35.35
Resisting Moment (k-ft):	68.52	92.53	92.68	68.59	68.52
Vertical Loads (lb) =	14132	19128	19490	14276	14132
x (ft) =	1.49	2.36	3.19	2.70	2.35
Footing Length, B (ft) =	6.84	6.84	6.84	6.84	6.84
e (ft) =	1.93	1.06	0.23	0.72	1.07

(note: 80% of soil weight used for overturning resist.)

Overturning Check:

1/3 B (ft) =	2.28	2.28	2.28	2.28	2.28
Is resultant within middle 2/3?	OK	OK	OK	OK	OK

Bearing Check: AASHTO 11.6.3.2

Resist. Mom. for Bearing (k-ft):	83.16	112.29	112.44	83.22	83.16
Vertical Loads for Bearing (lb) =	17084	23115	23477	17229	17084
x for bearing (ft) =	2.09	2.81	3.49	3.09	2.80
e for bearing (ft) =	1.33	0.61	-0.07	0.33	0.62
Beff (ft) =	2.99	4.72	6.38	5.40	4.70
Bearing Pressure (psf) =	5720	4901	3681	3188	3639
Bearing Resistance, ϕq_{ult} =	15525	15525	15525	5000	15525
	OK	OK	OK	OK	OK

Sliding Check:

Sliding Force (lb/ft) =	7186	7186	4982	4581	5612
Sliding Resistance =	8297	11226	11401	9297	8297
	OK	OK	OK	OK	OK ✓

Anchor #3 Stability Check

Limit State	Str 1-a	Str 1-b	Str IV	Service	Extre-II
EH	1.50	1.50	1.50	1.00	1.50
LL/LS	1.75	1.75	0.00	1.00	0.50
EV	1.00	1.35	1.35	1.00	1.00
DC	0.90	1.25	1.50	1.00	0.90
EQ	0.00	0.00	0.00	0.00	0.00
CT	0.00	0.00	0.00	0.00	1.00
Resistance Factors					
Sliding	0.90	0.90	0.90	1.00	0.90
Bearing	0.45	0.45	0.45	0.33	0.45

Soil Properties:

Active Earth Coeff., $(Ka)_{AB}$ = 0.293
Active Earth Coeff., $(Ka)_{ABH}$ = 0.265
Active Earth Coeff., $(Ka)_{ABV}$ = 0.126
Active Earth Coeff., $(Ka)_{BC}$ = 0.098
Active Earth Coeff., $(Ka)_{BCH}$ = 0.094
Active Earth Coeff., $(Ka)_{BCV}$ = 0.029

Modification Factor = 1.00

Overturning Check:

Anchor Height = 10.8583 ft
Design Wall Height, H = 14.11 ft
Anchor Type = E
Anchor Length at Top, L_{top} = 7.12 ft
Anchor Length at Bot., L_{bot} = 5.01 ft

Back slope $\beta 1$ = 26.22 deg.

Soil Pressure:

Horizontal (kah) :
Soil Pressure at A, σ_{LL} = 82 psf
Soil Pressure at B, σ_{Bab} = 393.41 psf
Soil Pressure at B, σ_{Bbc} = 139.13 psf
Soil Pressure at C, σ_{BOT} = 191.56 psf

Vertical (kav) :
Soil Pressure at A, σ_{LL} = 0 psf
Soil Pressure at B, σ_{Bab} = 187.65 psf
Soil Pressure at B, σ_{Bbc} = -42.54 psf
Soil Pressure at C, σ_{BOT} = -58.57 psf

Driving Forces:

Force $P_{Surcharge}$ = 1159 lb/ft
Moment Arm, y_1 = 7.06 ft
Overturning Moment, DM1 = 8181 ft-lb/ft
Force P_{ABH} = 2088 lb/ft
Moment Arm, y_2 = 7.04 ft
Overturning Moment, DM2 = 14696 ft-lb/ft
Force P_{BC1H} = 557 lb/ft
Moment Arm, y_3 = 1.50 ft
Overturning Moment, DM3 = 835 ft-lb/ft
Force P_{BC2H} = 105 lb/ft
Moment Arm, y_4 = 0.83 ft
Overturning Moment, DM4 = 87 ft-lb/ft

Resisting Forces:

Weight of Wall, Ww = 1357 lb/ft
Dist. From PT. O, X_1 = 0.42 ft
Resisting Moment, RM1 = 566 ft-lb/ft
Backslope Soil, I_A = 1747.96 lb/ft
Dist. From PT. O, X_2 = 5.58 ft
Resisting Moment, RM2 = 9755 ft-lb/ft
Soil Above Anchor, I_B = 7336 lb/ft
Dist. From PT. O, X_3 = 4.39 ft
Resisting Moment, RM3 = 32234 ft-lb/ft
Weight of Soil, II_A = 2123 lb/ft
Dist. From PT. O, X_4 = 3.000 ft
Resisting Moment, RM4 = 6370 ft-lb/ft

Anchor #3 Stability Check

Driving Forces (Con't):

Collision Force ,CT =	0	lb/ft
Moment Arm, y_5 =	12.36	ft
Overturning Moment, DM5 =	0	ft-lb/ft

Resisting Forces (Con't):

Weight of Soil, II_B =	683	lb/ft
Dist. From PT. O, X_5 =	6.096	ft
Resisting Moment, RM5 =	4164	ft-lb/ft
Force P_{ABV} =	996	lb/ft
Moment Arm, x6 =	7.95	ft
Resisting Moment, RM6 =	7922	ft-lb/ft
Force P_{BC1V} =	-170	lb/ft
Moment Arm, x7 =	6.56	ft
Resisting Moment, RM7 =	-1116	ft-lb/ft
Force P_{BC2V} =	-32	lb/ft
Moment Arm, x8 =	6.10	ft
Resisting Moment, RM8 =	-195	ft-lb/ft
Weight of Conc. Railing =	0	lb/ft
Moment Arm, x9 =	0.625	ft
Resisting Moment, RM9 =	0	ft-lb/ft

Location of Resultant Force:

	Str 1-a	Str 1-b	Str IV	Service	Extre-II
Overturning Moment (k-ft):	37.74	37.74	23.43	23.80	27.52
Resisting Moment (k-ft):	49.14	66.36	66.50	49.19	49.14
Vertical Loads (lb) =	11528	15610	15949	11663	11528
x (ft) =	0.99	1.83	2.70	2.18	1.88
Footing Length, B (ft) =	5.84	5.84	5.84	5.84	5.84
e (ft) =	1.93	1.09	0.22	0.74	1.04

(note: 80% of soil weight used for overturning resist.)

Overturning Check:

1/3 B (ft) =	1.95	1.95	1.95	1.95	1.95
Is resultant within middle 2/3?	OK	OK	OK	OK	OK

Bearing Check: AASHTO 11.6.3.2

Resist. Mom. for Bearing (k-ft):	59.64	80.54	80.68	59.70	59.64
Vertical Loads for Bearing (lb) =	13906	18820	19159	14041	13906
x for bearing (ft) =	1.57	2.27	2.99	2.56	2.31
e for bearing (ft) =	1.35	0.65	-0.07	0.36	0.61
Beff (ft) =	1.98	3.67	5.40	4.35	3.75
Bearing Pressure (psf) =	7034	5134	3547	3224	3707
Bearing Resistance, ϕq_{ult} =	15525	15525	15525	5000	15525
	OK	OK	OK	OK	OK

Sliding Check:

Sliding Force (lb/ft) =	6153	6153	4124	3909	4704
Sliding Resistance =	6753	9140	9305	7577	6753
	OK	OK	OK	OK	OK ✓

Connection Plate Design

Assumption: Wall is more likely to slide then to rotate.

Soil Properties:

At Rest Earth Coeff., $(Ko)_{AB}$ =	0.441
At Rest Earth Coeff., $(Ko)_{ABH}$ =	0.398
At Rest Earth Coeff., $(Ko)_{ABV}$ =	0.190

Load Factors:

	(overturning & sliding)	(Bearing Pressure)
EH =	1.35	1.35
EV =	0.00	0
DC =	0.00	0
LS =	0	0

Live Load Surcharge = 2 ft

Connection Plate Locations

Wall Height =	12.68	ft	
Wall Width for Plates =	0.00	ft ✓	(Wall does not count on plates for stability)
Plate #3, y1 from Bot of Wall Stem =	10.85	ft	
Plate #2, y1 from Bot of Wall Stem =	4.50	ft	
Plate #1, y1 from Bot of Wall Stem =	1.5	ft (input 0 if no plate #1)	

Tributary Wall Height for Plate #3 =	5.01	ft
Tributary Wall Height for Plate #2 =	4.675	ft
Tributary Wall Height for Plate #1 =	3	ft
Conn. Plate Force EH, Plate #3 =	0	lb
Conn. Plate Force EH, Plate #2 =	0	lb
Conn. Plate Force EH, Plate #1 =	0	lb
Conn. Plate Force LS, Plate #3 =	0	lb
Conn. Plate Force LS, Plate #2 =	0	lb
Conn. Plate Force LS, Plate #1 =	0	lb
Conn. Plate Force, Plate #3 Pu =	0	lb
Conn. Plate Force, Plate #2 Pu =	0	lb
Conn. Plate Force, Plate #1 Pu =	0	lb
Controlling Pu =	0.0	kips

Check Bolt / Insert Capacity

No. of Bolts Per Connection =	2		
Bolt Pu =	0.00	kips	
Bolt Pullout Capacity (ult) =	8.2875	kips	**OK**
Bolt Shear Capacity (ult) =	4.3875	kips	**OK**

Connection Plate Design

Check Bending of Plate

Moment Arm for Plate Bending =	4.5	in
Connection Plate Height(width) =	10	in
Connection Plate Thickness =	0.50	in
Connection Plate Yield Strength Fy =	36	ksi
Reduction Factor for Bending Phi =	0.9	

Factored Mu =	0.00	k-in	
S_{pl} =	0.42	in^3	
Plate Bending Stress Fult =	0.00	ksi	**OK**

Check Bending in Wall - Vertical Bars

Assumptions: 1.) Wall stem is cantileverd from anchor.
2.) Use active earth pressure because wall is free to rotate.
3.) Critical Wall section will be at maximum horizontal load, at tallest anchor section.

Modification Factor = 1

Data:

H_{max} =	16.06	ft
h_{max} =	12.56	ft
LL surcharge, V_{LS} =	0.082	ksf
γ_{soil} =	0.140	ksf
K_a =	0.29	
δ =	25.5	
f'c =	4	ksi
fy =	60	ksi
0.65 < β1 < 0.85 =	0.85	(5.7.2.2)
Vertical Bars Size:	# 5	✓
Spacing:	5	in
Bar Cover:	2	in

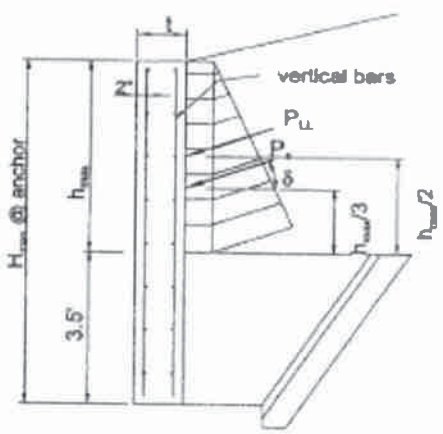

Find the horizontal load:

$$P_{soil} = (1/2)\gamma_S K_A h_{max}^2 (\cos\delta) = \quad 2.93 \text{ kip/ft}$$

$$P_{LS} = \sigma_{LS} K_A h_{max} (\cos\delta) = \quad 0.27 \text{ kip/ft}$$

CT = 0.00 kip/ft

Factored Loads:

	Str 1-a	Service	Extre-II
Mu	21.38	13.97	19.24
Vu	4.87	3.20	4.52

Moment Capacity:

As prov. :	0.736	in^2
d (in):	7.69	d = t - 2.0" cov. - 1/2 Bar Φ
a (in):	1.083	a=As*fy/(0.85*b*f'c)
c (in):	1.274	c=a/β1
ϕMn (kip-ft):	**23.68**	ϕMn = ϕ_M*As*fy*(d-a/2)/12
ϕ_M =	0.90	

(ϕ_M=0.75+0.15[(ε_t-ε_{cl})/(ε_{tl}-ε_{cl})], 0.75min, 0.9max, 5.5.4.2.1-2)

ϕMn > Mu **OK!**

Shear Capacity Check

ϕVn (kip): **10.49** ϕVn = 0.90*β*√f'c*b*d

β = 2.00

ϕVn > Vu **OK!**

Check Min. Reinforcement:

fr = .24 * √f'c = 0.48 ksi (5.4.2.6)

S = $bt^2/6$ = 200 in3

Flex. cracking var. fac. (Other Con. Strs.) 1.60 γ_1

A615, Gr. 60 Reinforcement (Carbon steel) 0.67 γ_3

Mcr = γ_3 * [(γ_1 * fr)*S] = 8.58 kip-ft (5.7.3.3.2)

Mr = ϕMn > (lesser of Mcr or 1.33 Mu)

Mcr = 8.58 kip-ft

1.33 * Mu = 28.44 kip-ft

Mr = ϕMn = 23.68 kip-ft **OK**

Crack Control Check

Ma = 13.97 **kip-ft/ft**

$E_c = 1820 \bullet \sqrt{f'c}$ = 3640ksi

E_s = 29000ksi dc= 2.31in

γe= 0.75

$n = E_s / E_c$ = 7.97

ρn = 0.0635904

$k = \sqrt{2\rho n + \rho n^2} - \rho n$ = 0.299

$j = 1 - (k/3)$ = 0.900

$f_s = (M)/(A_s jd)$ = 32.89 ksi

Bs= 1+dc/(0.7*(h-dc))= 1.43

max spa ≤ [(700γe) / (βsfs)] - 2dc = 7 in **OK!** ✓

Check Type F Anchor Attachment

Assumptions: 1.) Only top three connection bars, represented by T1, T2 & T3 in sketch below, will resist tension.
2.) Assume min. steel will control, design for 1.33 Mu (See ART. 5.7.3.3.2)

Anchor #1 $M_{D\,EH}$=	117.84	kip-ft	Anchor #1 $M_{D\,LS}$=	52.99	kip-ft
Anchor #2 $M_{D\,EH}$=	101.73	kip-ft	Anchor #2 $M_{D\,LS}$=	48.29	kip-ft
Anchor #3 $M_{D\,EH}$=	78.09	kip-ft	Anchor #3 $M_{D\,LS}$=	40.90	kip-ft
Anchor #1 $M_{D\,CT}$=	0.00	kip-ft	Anchor #1 1 Mod. Factor =	1.00	
Anchor #2 $M_{D\,CT}$=	0.00	kip-ft	Anchor #2 1 Mod. Factor =	1.00	
Anchor #3 $M_{D\,CT}$=	0.00	kip-ft	Anchor #3 1 Mod. Factor =	1.00	

Data:

f'c =	4	ksi
fy =	60	ksi
0.65 < β1 < 0.85 =	0.85	(5.7.2.2)
Connection Bars Size:	# 7	✓

Factored Loads:

	Str 1-a	Service	Extre-II
Anchor #1 Mu (k-ft) =	269.48	170.82	203.25
Anchor #2 Mu (k-ft) =	237.10	150.02	176.74
Anchor #3 Mu (k-ft) =	188.72	118.99	137.59
1.33 Mu =	358.41		

Moment Capacity:

As prov. :	3.608	in^2	(6 Bars)
d (in):	30.00		
b (in):	6.00		
a (in):	10.612	a=As*fy/(0.85*b*f'c)	
c (in):	12.484	c=a/β1	
ϕMn (kip-ft):	**383.31**	ϕMn = ϕ_M*As*fy*(d-a/2)/12	
ϕ_M =	0.86		

(ϕ_M=0.75+0.15[(ε_t-ε_{cl})/(ε_{tl}-ε_{cl})], 0.75min, 0.9max, 5.5.4.2.1-2)

ϕMn > Mu **OK!** ✓

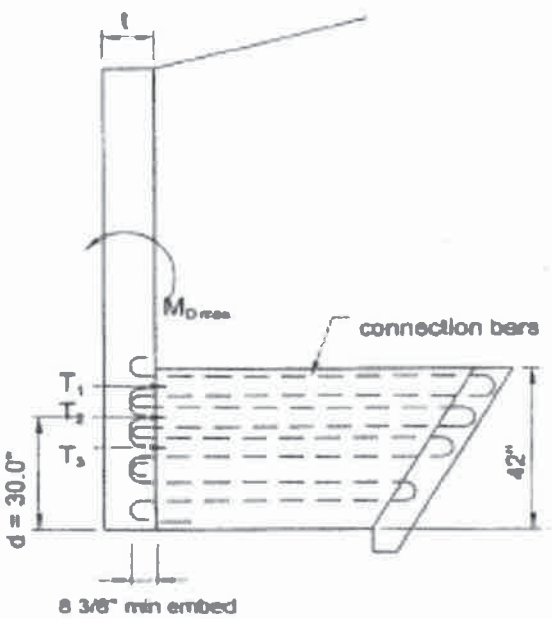

Check Hook Development:

db (in): 0.875

ART 5.11.2.4

L_{hb} (in):	16.63	<-- Controls
or		
8db (in):	7.00	
or		
6in min:	6.00	

L_{dh} (in): 9.35 =(0.8)L_{hb} x A,req'd/As,pro'd