Proposed Bridge Improvement Project

Addison - STP CULV (14)

Bridge #2 on Vermont Route 17

Concrete:

Mix Designation: P60TER

Required Strengths:

1. Mix Design - 6000 PSI
2. Striping Strength - 3000 PSI
3. Handling Strength - 3000 PSI
4. Shipping Strength - 4500 PSI
5. Install Strength - 4500 PSI
6. Traffic Loading - 6000 PSI

Fabrication Tolerances:

1. Width ±1/4"
2. Height ±1/4"
3. Length ±1/2"
4. Rebar Cover 2" Min. (Unless Noted Otherwise)
5. Rebar Spacing ±1"
6. Rebar Clearance ±1/4"
7. Insert Placement ±1/4"

Design Notes:

1. Design is in accordance w/ ASTM C1433, PCI MNL135, VAOT540 & AASHTO 2010 LRFD Bridge Design Specs Fifth Edition
2. Any conflict between tolerances listed above shall result in the usage of the stricter tolerance
3. Design Live Load = HL-93
4. Materials and Manufacturing shall conform to ASTM C1433
5. Earth Fill Design: 3'-0"

Installation:

1. Sub Base for Box Culvert / Cut Off Walls to be compacted and level
2. Precast Cut Off Walls to be installed
3. All Elevations are to be Checked and Verified they Match Those of Plan Set
4. Begin Sequence of Installing All Box Culvert Sections
5. Clean Granular Backfill for structures used for Backfill of Footers & of Box Culvert so water can reach weep holes if applicable
6. Fill all Lifting Holes, Bolt Pockets and Box Culvert grooves and seams w/ non-shrink grout

Reinforcing:

General Notes:

1. Reinforing Steel -
   a. Precast Frame Sections & Cut Off Walls shall be Level I ASTM A615
   b. Precast Headwalls shall be Level III Stainless Steel ASTM A955 Grade 60
2. Materials and Manufacturing shall conform to ASTM C1433
3. Bar Tied at Every Intersection

Tolerances:

1. Spacing ±1"
2. Clearance ±1/4"

Lap Lengths:

1. Per AASHTO 5.11.2.1.1 & 5.11.5.3.1

Lap Length for Level I (Plain):
#4 Bar=21"
#5 Bar=26"
#6 Bar=31"
Lap Lengths for Level III (Stainless Steel):
#4 Bar=21"
#5 Bar=26"
#6 Bar=31"

Joint Treatment:

Vertical Seams:
Per VTrans Approved Product List 780.02
Overhead & Vertical Concrete Repair Mortar

Horizontal Seams / Grout:
Per VTrans Approved Product List 707.03
Mortar, Type IV

Waterproofing:

SHOP

1. Membrane waterproofing shall be applied to the entire top of concrete box
2. Silane shall be applied on all exposed concrete surfaces, this includes Headwall, Box Ends & any other portions of concrete open to the weather
3. A two foot wide strip of membrane shall cover each vertical joint

Miscellaneous:

1. All exposed hardware to be galvanized.
2. All bolts & threaded rods to be ASTM F1554 Grade 105 Unless Noted Otherwise
3. All Exposed Edges of Concrete Shall be Chamfered 1"x1"

Legend:

- (A) 2"Ø PVC Sleeve
- (B) 4"Ø PVC Sleeve
- (C) Mechanical Bolt Pocket (A.L. Patterson w/ 1"Ø Galv. Coil Rod)
- (D) Oxford A750-7 Lifting Device
- (E) 1"Ø x 12" CX-9 Coil Loop Insert
- (F) 1/2"Ø x 2 3/4" FI-42 Flared Loop Ferrule Insert
- (G) 7/8"Ø x 6" FI-42 Flared Loop Ferrule Insert
- (H) 1 1/2" x 3 1/2" Continuous Keyway
- (I) Solid Lines Indicate Chamfered Edge (Isometrics)

STATE OF VERMONT · DAVID W. BOEHM · No. 3581 · REGISTERED PROFESSIONAL ENGINEER

CONTRACTORS VTSPE:

1 09/26/13 - Revised Per Vermont Agency of Transportation Review

Vermont Agency of Transportation
RECEIVED
CK'D BY RK/JW OK'D BY JS
September 26, 2013
RESUBMIT NO Approved AsNoted
BY KH DATE 9-30-2013

PRECAST CONCRETE BOX CULVERT SHOP DRAWINGS (SDI JOB #13510)

SUPERVISOR: M. WHEELER	PROJECT NAME: ADDISON
DETAILER: C. DUPLANTIS	PROJECT #: STP CULV (14)
CHECKER: M. WHEELER	LOCATION: ADDISON, VT
ENGINEER: ENGINEERING VENTURES	BRIDGE: #2 ON VT ROUTE 17

CONTRACTOR:
193 INDUSTRIAL AVE.
WILLISTON, VT 05495
Ph: (802) 658-0201

FABRICATOR:
193 INDUSTRIAL AVE.
WILLISTON, VT 05495
Ph: (802) 658-0201

SD Ireland Precast Division

09/19/13 | PRECAST NOTES, SPECIFICATIONS AND LEGEND | 1 OF 4

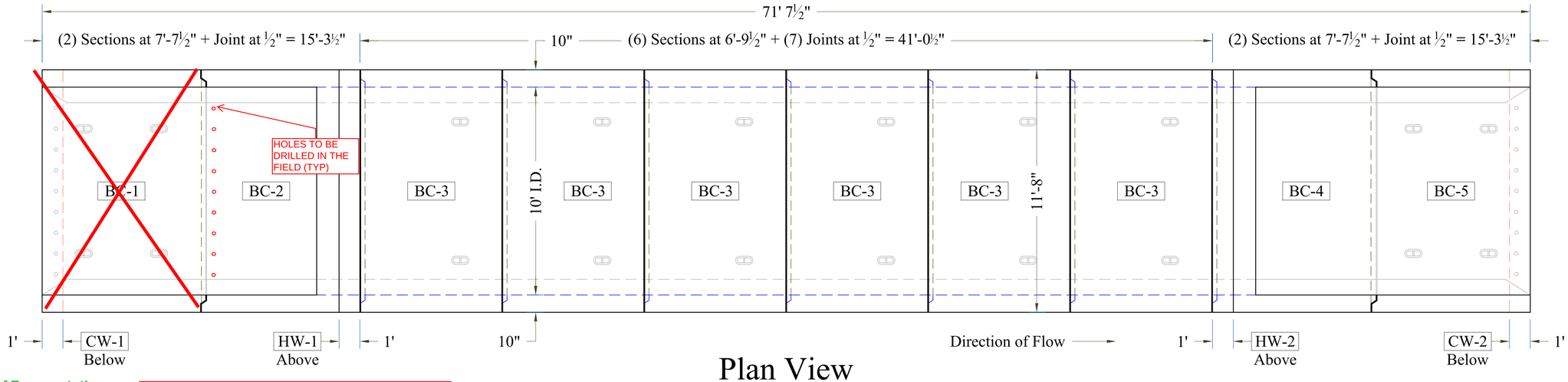

Plan View

Vermont Agency of Transportation
RECEIVED
CK'D BY RK/JW OK'D BY JS
September 26, 2013
RESUBMIT NO Approved AsNoted
BY KH DATE 10-25-2013

REVISED 10-25-2013 JTS
BC-1 HAS BEEN OMITTED AND WILL NOT BE FABRICATED.
HOLES FOR FOR DOWELING CUT OFF WALL SHALL BE ADDED TO BC-2

STATE OF VERMONT DAVID W. BOEHM No. 3581 REGISTERED PROFESSIONAL ENGINEER

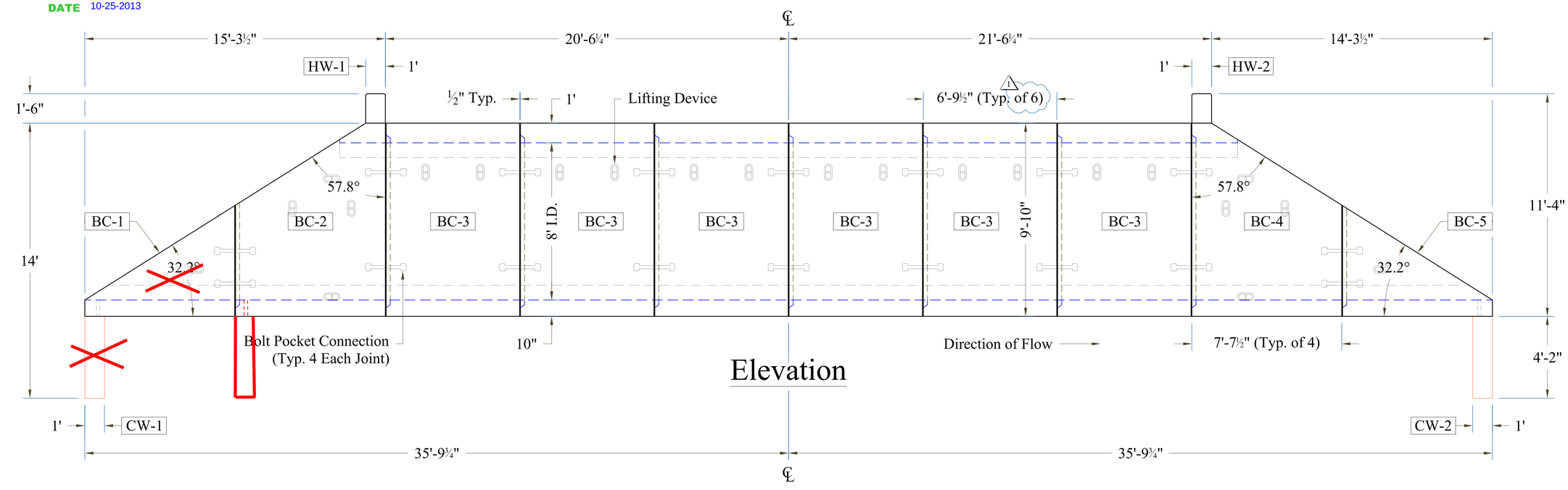

Elevation

CONTRACTORS VTSPE:

Table of Units * BC-2 & BC-4 Include Headwall Weights ** Weights May Vary

Name	Qty	Length	Vol (CY)	Wt (lbs)**	Name	Qty	Length	Vol (CY)	Wt (lbs)**	Name	Qty	Length	Vol (CY)	Wt (lbs)**
BC-1	1	7'-7½"	4.01	16,050	BC-3	6	6'-9½"	9.02	36,065	BC-5	1	7'-7½"	4.01	16,050
BC-2*	1	7'-7½"	7.50	30,000	BC-4*	1	7'-7½"	7.50	30,000	CW-1	1	11'-8"	1.80	7,200
										CW-2	1	11'-8"	1.80	7,200

1 09/26/13 - Revised Per Vermont Agency of Transportation Review

PRECAST CONCRETE BOX CULVERT SHOP DRAWINGS (SDI JOB #13510)

SUPERVISOR: M. WHEELER
DETAILER: C. DUPLANTIS
CHECKER: M. WHEELER
ENGINEER: ENGINEERING VENTURES

PROJECT NAME: ADDISON
PROJECT #: STP CULV (14)
LOCATION: ADDISON, VT
BRIDGE: #2 ON VT ROUTE 17

CONTRACTOR:
193 INDUSTRIAL AVE.
WILLISTON, VT 05495
Ph: (802) 658-0201

FABRICATOR:
193 INDUSTRIAL AVE.
WILLISTON, VT 05495
Ph: (802) 658-0201

SD Ireland Precast Division

09/19/13 PRECAST BOX CULVERT LAYOUT & ELEVATION 2 OF 4

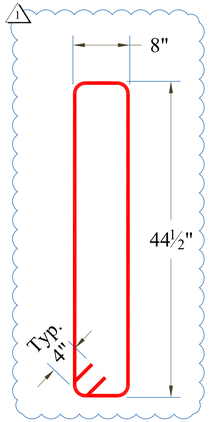

CW Stirrup

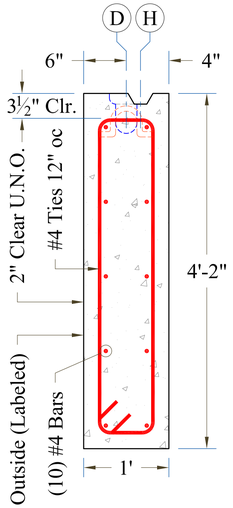

CW Section

Head Wall Details

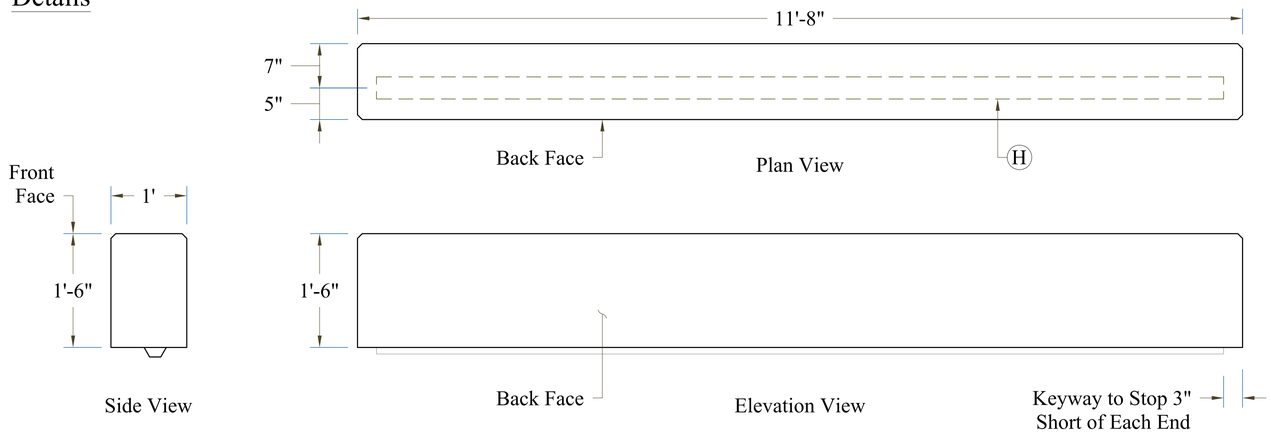

Head Wall Isometric

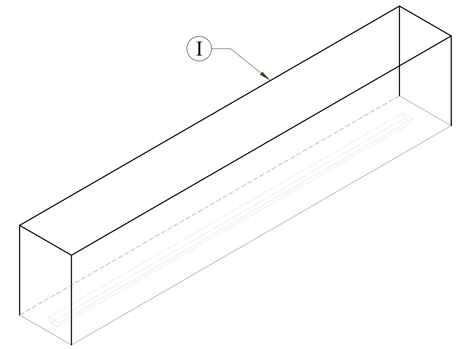

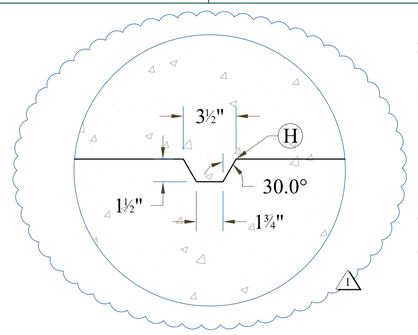

Typical Keyway Detail

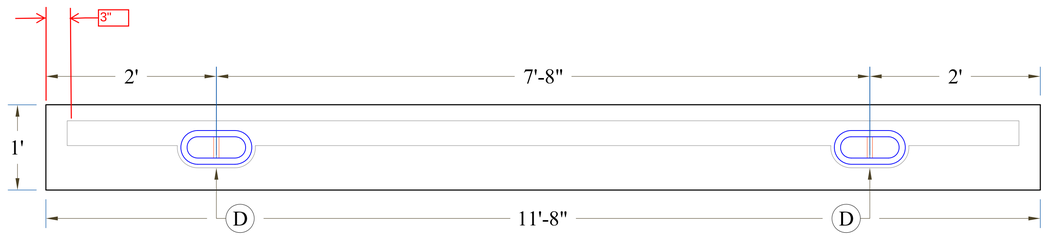

Cut Off Wall Plan

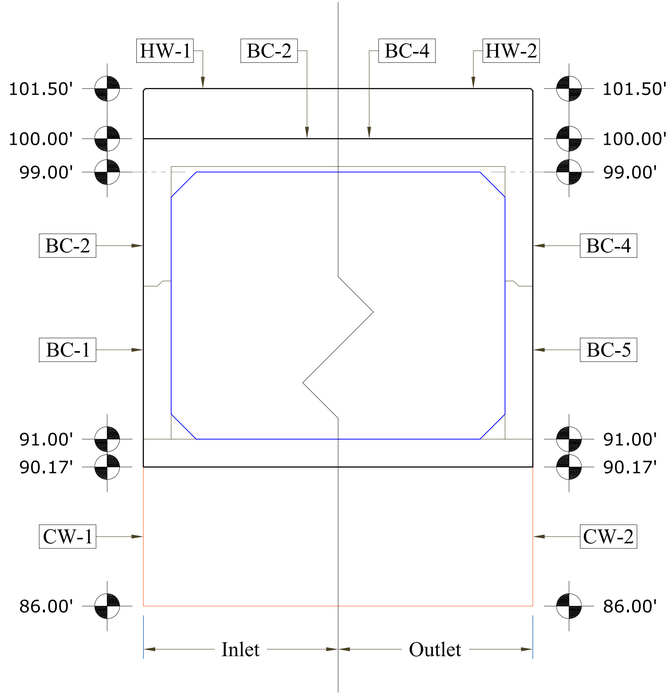

Inlet & Outlet Elevation

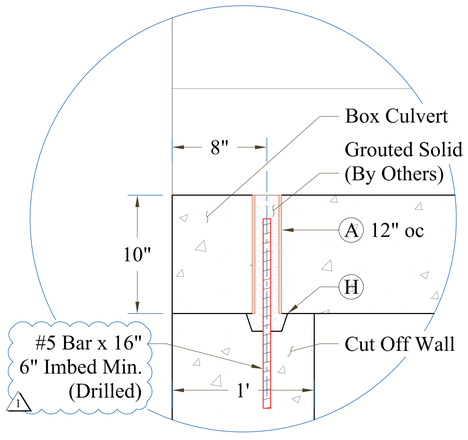

Culvert to Cut Off Wall Connection

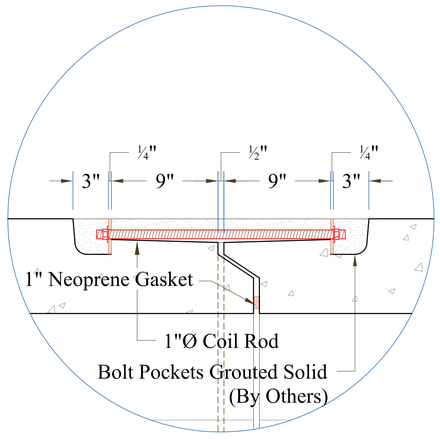

Bolt Pocket Connection Detail

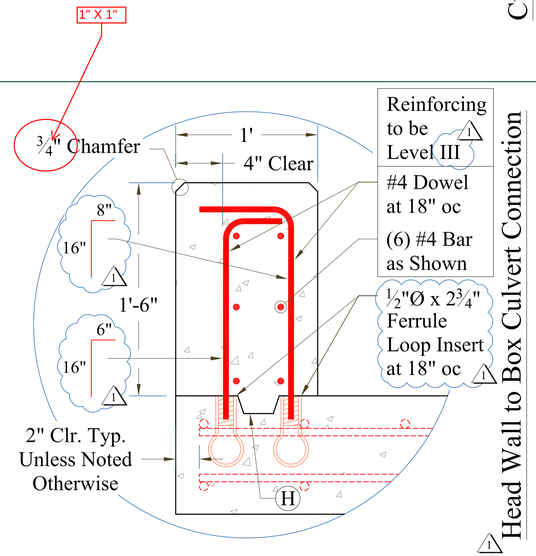

Head Wall to Box Culvert Connection

CONTRACTORS VTSPE:

1 09/26/13 - Revised Per Vermont Agency of Transportation Review

Vermont Agency of Transportation
RECEIVED
CK'D BY RK/JW OK'D BY JS
September 26, 2013
RESUBMIT NO Approved AsNoted
BY KH DATE 9-30-2013

PRECAST CONCRETE BOX CULVERT SHOP DRAWINGS (SDI JOB #13510)

SUPERVISOR: M. WHEELER
DETAILER: C. DUPLANTIS
CHECKER: M. WHEELER
ENGINEER: ENGINEERING VENTURES

PROJECT NAME: ADDISON
PROJECT #: STP CULV (14)
LOCATION: ADDISON, VT
BRIDGE: #2 ON VT ROUTE 17

CONTRACTOR:
193 INDUSTRIAL AVE.
WILLISTON, VT 05495
Ph: (802) 658-0201

FABRICATOR:
193 INDUSTRIAL AVE.
WILLISTON, VT 05495
Ph: (802) 658-0201

SD Ireland Precast Division

09/19/13 | MISC. DETAILS ,HEADWALL & CUTOFF WALLS | 3 OF 4

BC-1 Details

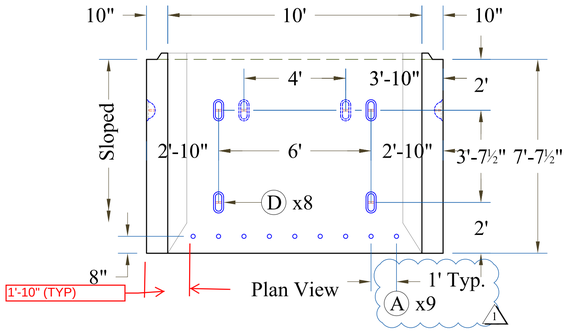

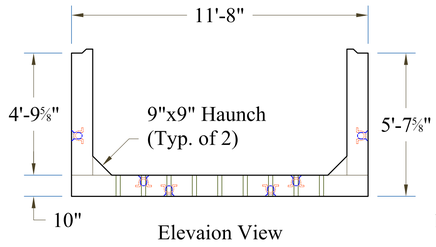

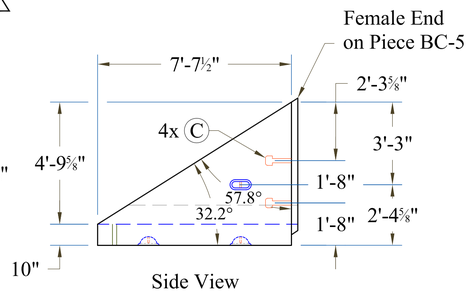

Bc5 to be Mirror Image of BC-1 w/ Female End ⚠1

BC-3 Details

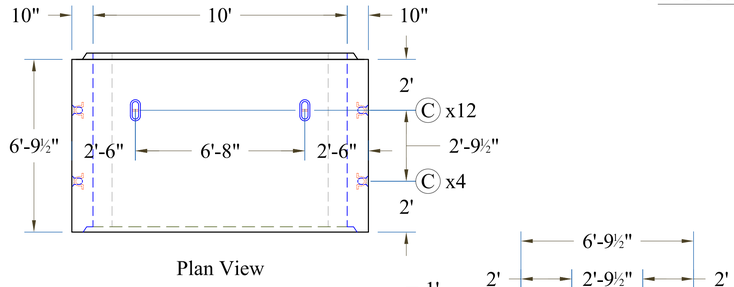

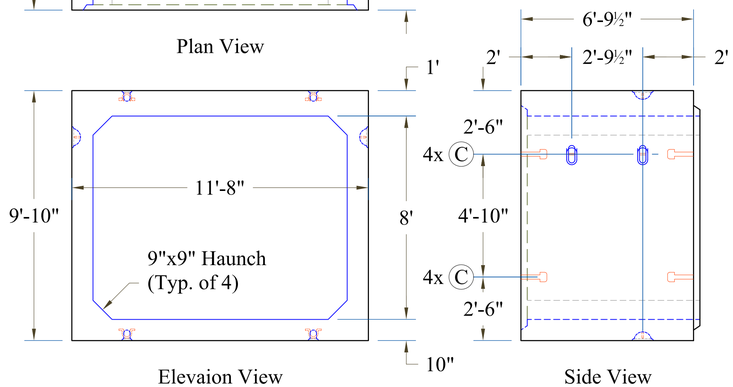

Typical Shear Key Detail

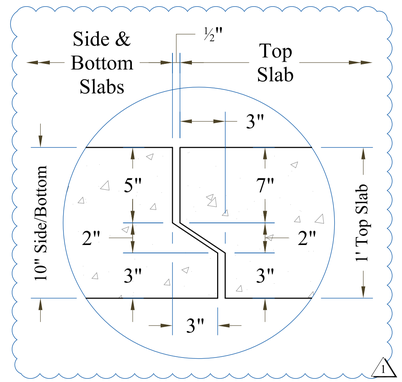

BC-2 Details

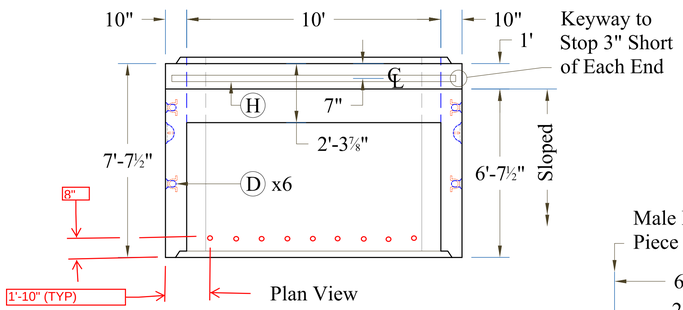

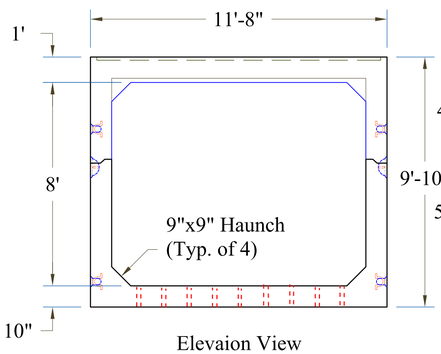

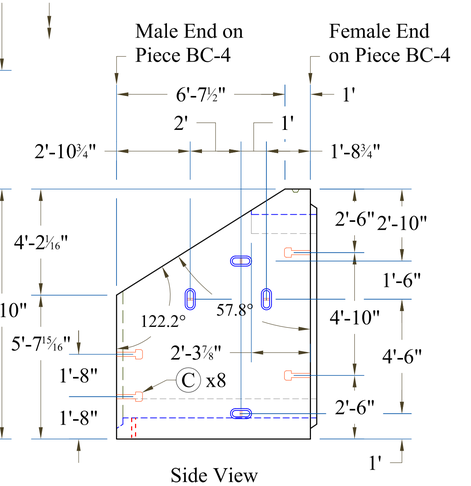

Bc4 to be Mirror Image of BC-2 w/ Ends Swapped ⚠1

Rebar Schedule for BC-1 & BC-5

Mark	Size	Max Spacing	Length	Type	A	B
As1	#4	12"	Varies	Bent	---	32"
As2	#4	12"	Varies	Hook	--- ⚠1	21"
As3	#4	10"	⚠1 14'-10"	Hook	136"	21"
As4	#4	12"	11'-4"	Str.	136"	
As5	#4	18"	Varies	Str.	---	

Notes: 1. 2" Clear Typical Unless Noted Otherwise
2. Where Indicated as Varies, Lengths of Rebar Change Due to Slope ⚠1

Rebar Schedule for BC-2, BC-3 & BC-4

Mark	Size	Max Spacing	Length	Type	A	B
Bs1	⚠1 #5	12"	11'-4"	Str.	136"	
Bs2	#6	⚠1 10"	⚠1 16'-6"	Hook	136" ⚠1	31"
Bs3	#6	10"	16'-6"	Hook	136"	31"
Bs4	#4	12"	11'-4"	Str.	136"	
Bs5	⚠1 #6	12"	14'-10"*	Bent	114"*	32"
Bs6	#5	12"	⚠1 13'-10"*	Hook	114"*	⚠1 26"
Bs7	#4	18"	6'-5½"*	Str.	77½"*	

these longitudinal bars can be slightly longer because they protrude into the lip. ASTM C1433 specifies they are to be 1/2" to 2" from the outside face of the lip. an extra 1" on these would be ok.

78 1/2"

6'-6 1/2"

Notes: 1. 2" Clear Typical Unless Noted Otherwise
2. Where Indicated as Varies, Lengths of Rebar Change Due to Slope ⚠1
* Varies on Box Culvert Sections BC-2 & BC-4

Box Culvert Reinforcing

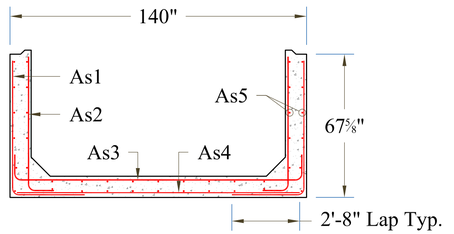

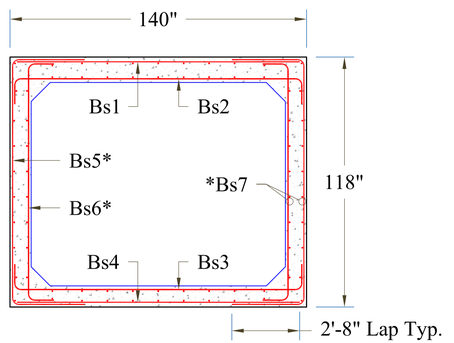

STATE OF VERMONT DAVID W. BOEHM No. 3581 REGISTERED PROFESSIONAL ENGINEER

CONTRACTORS VTSPE:

REVISED 10-25-2013 JTS
BC-1 HAS BEEN OMITTED AND WILL NOT BE FABRICATED.
HOLES FOR DOWELING CUT OFF WALL SHALL BE ADDED TO BC-2

⚠1 09/26/13 - Revised Per Vermont Agency of Transportation Review

Vermont Agency of Transportation
RECEIVED
CK'D BY RK/JW OK'D BY JS
September 26, 2013
RESUBMIT NO Approved AsNoted
BY KH DATE 10-25-2013

PRECAST CONCRETE BOX CULVERT SHOP DRAWINGS (SDI JOB #13510)

SUPERVISOR: M. WHEELER	PROJECT NAME: ADDISON
DETAILER: C. DUPLANTIS	PROJECT #: STP CULV (14)
CHECKER: M. WHEELER	LOCATION: ADDISON, VT
ENGINEER: ENGINEERING VENTURES	BRIDGE: #2 ON VT ROUTE 17

CONTRACTOR:
193 INDUSTRIAL AVE.
WILLISTON, VT 05495
Ph: (802) 658-0201

FABRICATOR:
193 INDUSTRIAL AVE.
WILLISTON, VT 05495
Ph: (802) 658-0201

SD Ireland Precast Division

09/19/13 | BOX CULVERT SECTION DETAILS & REINFORCING | 4 OF 4