ENGINEERING VENTURES INC

208 Flynn Avenue, Suite 2A, Burlington, VT 05401 · Tel: 802-863-6225 · Fax: 802-863-6306
85 Mechanic Street, Suite 350A, Lebanon, NH 03766 · Tel: 603-442-9333 · Fax: 603-442-9331
18 Division Street, Saratoga Springs, NY 12866 · Tel: 518-224-0004

Design Calculations

For:

VT Route 17 (Bridge #2) Culvert Replacement

Addison, VT

Lifting Calculations

For:

S.D. Ireland

Submitted On:

November 11, 2013

For Approval

STATE OF VERMONT
DAVID W. BOEHM
No. 3531
REGISTERED
PROFESSIONAL ENGINEER

ENGINEERING VENTURES PC
208 Flynn Avenue, Suite 2A
Burlington, VT 05401
T: 802-863-6225
F: 802-863-6306
85 Mechanic Street, Suite 350A
Lebanon, NH 03766
T: 603-442-9333
F: 603-442-9331

JOB ADDISON BOX CULVERT
SHEET NO. 1 OF 5
CALCULATED BY BN DATE 11/11/13
CHECKED BY DB DATE 11/11/13
SCALE –

ADDISON BOX CULVERT LIFTING CALCULATIONS:

TYPICAL BOX CULVERT:

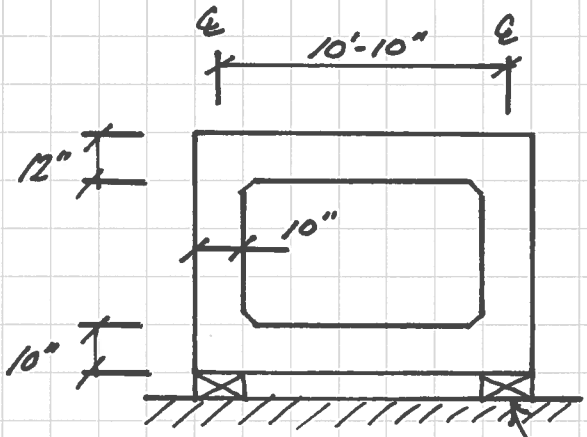

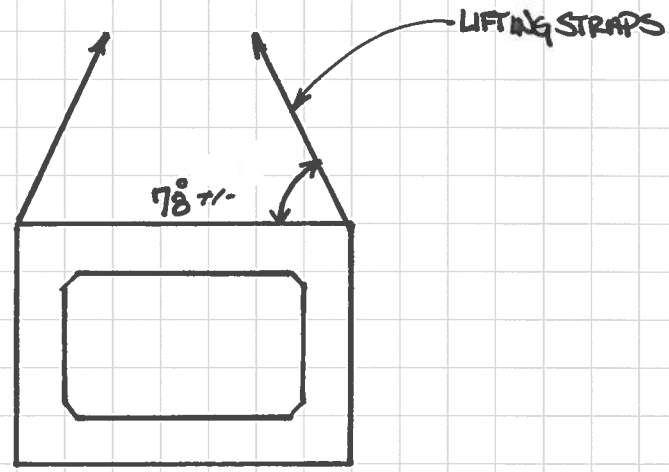

CONT. DUNNAGE ALONG WALLS (TYP)

YARD STORAGE/TRAVEL

YARD LIFTING/ERECTION

WEIGHT = 36,000# ±

$M_{TOP\,SLAB} = 150pcf\,(1')\,(10.83')^2/8 = 2.2\,k\text{-}ft/ft$

$M_{BOT\,SLAB} = 2.2\,k\text{-}ft/ft\,(10"/12") = 1.83\,k\text{-}ft/ft$

IF UNIT WIDTH = 6'-9½" = 6.79'

$M_{TOP\,SLAB} = 2.2\,k\text{-}ft/ft\,(6.79') = 14.94\,k\text{-}ft$

$M_{BOT\,SLAB} = 1.83\,k\text{-}ft/ft\,(6.79') = 12.43\,k\text{-}ft$

LIFTING HARDWARE NOT REVIEWED WITH THIS SUBMITTAL

SECTION PROPERTIES:

$S_{TOP} = bd^2/6 = (6.79')(12"/')(12")^2/6 = 1955.5\,in^3$

$S_{BOT} = (6.79')(12"/')(10")^2/6 = 1358\,in^3$

ENGINEERING VENTURES PC
208 Flynn Avenue, Suite 2A
Burlington, VT 05401
T: 802-863-6225
F: 802-863-6306
85 Mechanic Street, Suite 350A
Lebanon, NH 03766
T: 603-442-9333
F: 603-442-9331

JOB ADDISON BOX CULVERT
SHEET NO. 2 OF 5
CALCULATED BY BN DATE 11/11/13
CHECKED BY DB DATE 11/11/13
SCALE —

ASSUME "WITHOUT CRACKING" MODULUS OF RUPTURE FROM PCI DESIGN HANDBOOK 6TH ED.:

$$\frac{7.5\sqrt{f'_c}}{1.5} = 5\sqrt{f'_c}$$

AT HANDLING: $5\sqrt{3000psi} = 273.9$ psi
SHIPPING/INSTALL: $5\sqrt{4500psi} = 335.4$ psi

$\sigma_{TOP\,SLAB} = M/S = 14.94\,k\cdot ft\,(12''/')(1000\#/ft)/(1955.5in^3) = 91.7$ psi

WITH EQUIVALENT STATIC LOAD MULTIPLIERS (PCI TABLE 5.3.3.1)

ASSUME WORST CASE: TRAVEL = 1.5

$\therefore\ \sigma_{TOP\,SLAB} = 1.5(91.7psi) = 137.6psi < 273.9psi$ ✓OK

$\sigma_{BOT\,SLAB} = M/S = 12.43\,k\cdot ft\,(12''/')(1000\#/ft)/1358\,in^3 = 109.8$ psi

W/ MULTIPLIER: $\sigma_{BOT\,SLAB} = 1.5(109.8) = 164.7psi < 273.9psi$
✓OK

WALLS OK BY INSPECTION S>>

ENGINEERING VENTURES PC
208 Flynn Avenue, Suite 2A
Burlington, VT 05401
T: 802-863-6225
F: 802-863-6305

85 Mechanic Street, Suite 350A
Lebanon, NH 03766
T: 603-442-9333
F: 603-442-9331

JOB: ADDISON BOX CULVERT
SHEET NO. 3 OF 5
CALCULATED BY: BN DATE: 11/11/13
CHECKED BY: DB DATE: 11/11/13
SCALE: –

AT BOX CULVERT BC-2:

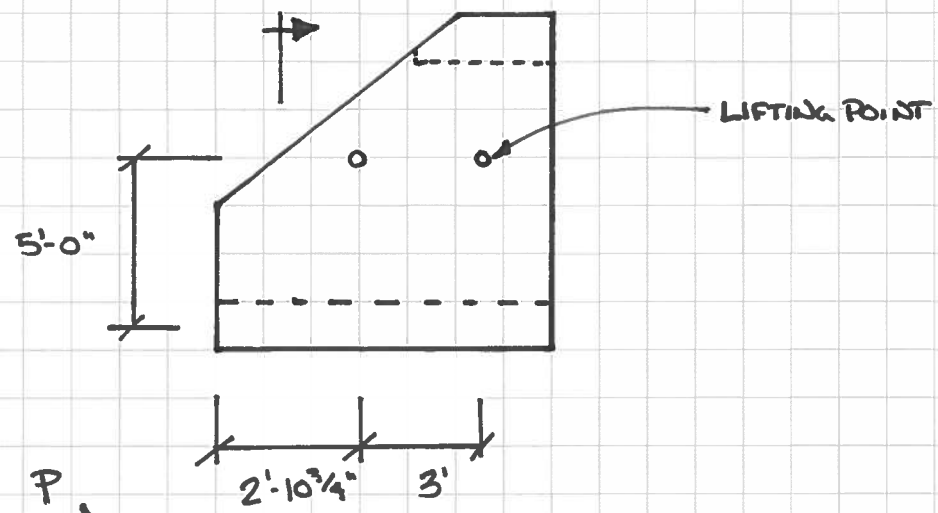

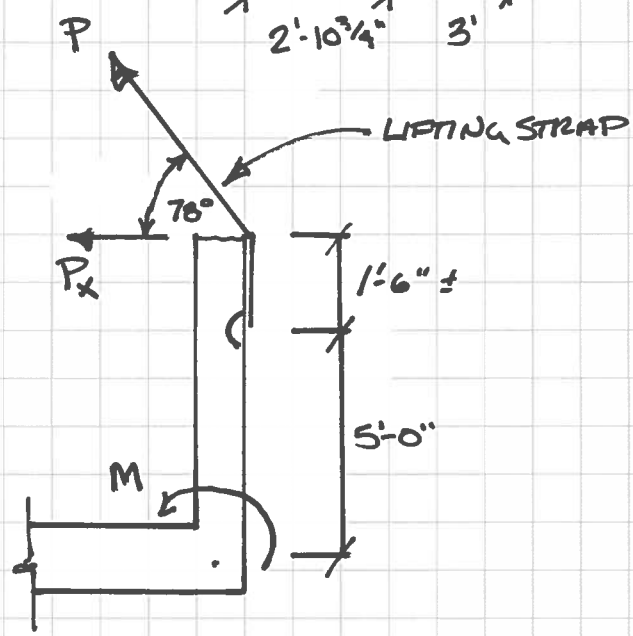

BOX WT = 30,000

W/ 4 SUPPORT PTS: 30k/4 = 7.5k

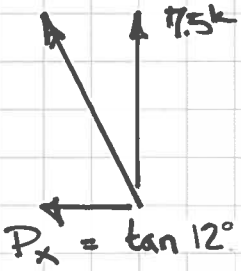

P_x = tan 12° (7,500#) = 1487.9#

M_{WALL} = 1488# (6.5') = 9672 #-ft = 116,064 #-in

S_{WALL} = (4.396')(12"/1')(10")²/6 = 879.2 in³

ASSUME MULTIPLIER = 1.5 (MAX-TRAVEL) M = 174,096 #-in

σ_{WALL} = M/S = 174,096 #-in / 879.2 in³ = 198 psi < 273.9 psi ✓ OK

ENGINEERING VENTURES PC
208 Flynn Avenue, Suite 2A
Burlington, VT 05401
T: 802-863-6225
F: 802-863-6306
85 Mechanic Street, Suite 350A
Lebanon, NH 03766
T: 603-442-9333
F: 603-442-9331

AT BOX CULVERT BC1:

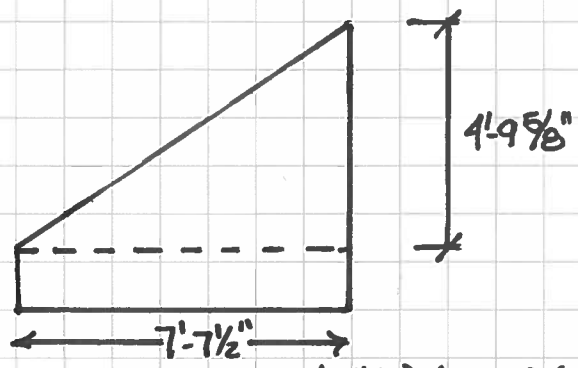

av ht = 48'/2 = 2.4 ft wt = (10"/12)(2.4ft)(150pcf) = 0.3k/ft

CHECK BASE SLAB W/ WALL WEIGHT:

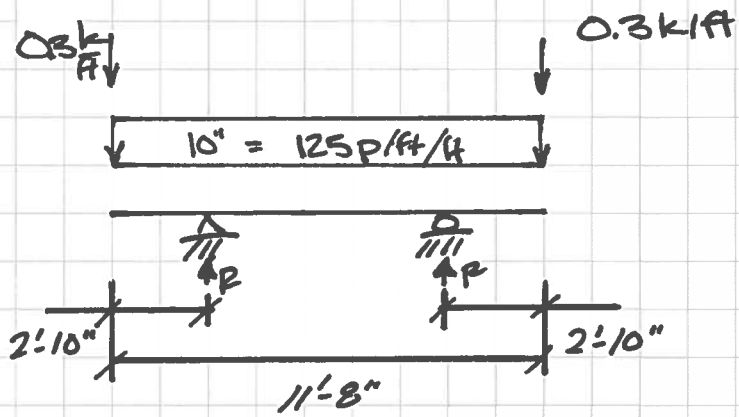

$R = \frac{0.125(11.67)}{2} + 0.3^k$
$= 1.03^k$

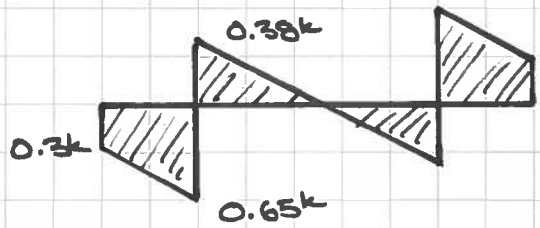

V, k

$M_{mk} = \left(\frac{0.65^k + 0.3^k}{2}\right)2.83' - \frac{0.38(3')}{2} = 0.77\ k\text{-}ft/ft$

AT 1/2 WIDTH ⇒ $M_{mk@SECTION} = 0.77\frac{k\text{-}ft}{ft}(7.625ft)/2 = 2.94\ k\text{-}ft$

ENGINEERING VENTURES PC
208 Flynn Avenue, Suite 2A
Burlington, VT 05401
T: 802-863-6225
F: 802-863-6306
85 Mechanic Street, Suite 350A
Lebanon, NH 03766
T: 603-442-9333
F: 603-442-9331

JOB ADDISON BOX CULVERT
SHEET NO. 5 OF 5
CALCULATED BY BW DATE 11/11/13
CHECKED BY DB DATE 11/11/13
SCALE -

$S_{SECTION} = (7.625'/2)(12''/') (10)^2/6 = 762.5 \text{ in}^3$

ASSUME MULTIPLIER = 1.5 (MAX - TRAVEL)

$M_{@SECTION} = 2.94 \text{ k-ft } (1.5) = 4.41 \text{ k-ft} = 52{,}920 \text{ ft-in}$

$\sigma = M/S = 52{,}920 \text{ ft-in} / 762.5 \text{ in}^3 = 69.4 \text{ psi} < 273.9 \text{ psi}$ ✓

MOMENT IN OTHER DIRECTION DOES NOT CONTROL FOR INSPECTION. DUE TO STIFFNESS OF WALL.