Please include lifting calculations and concrete mix design with re-submittal

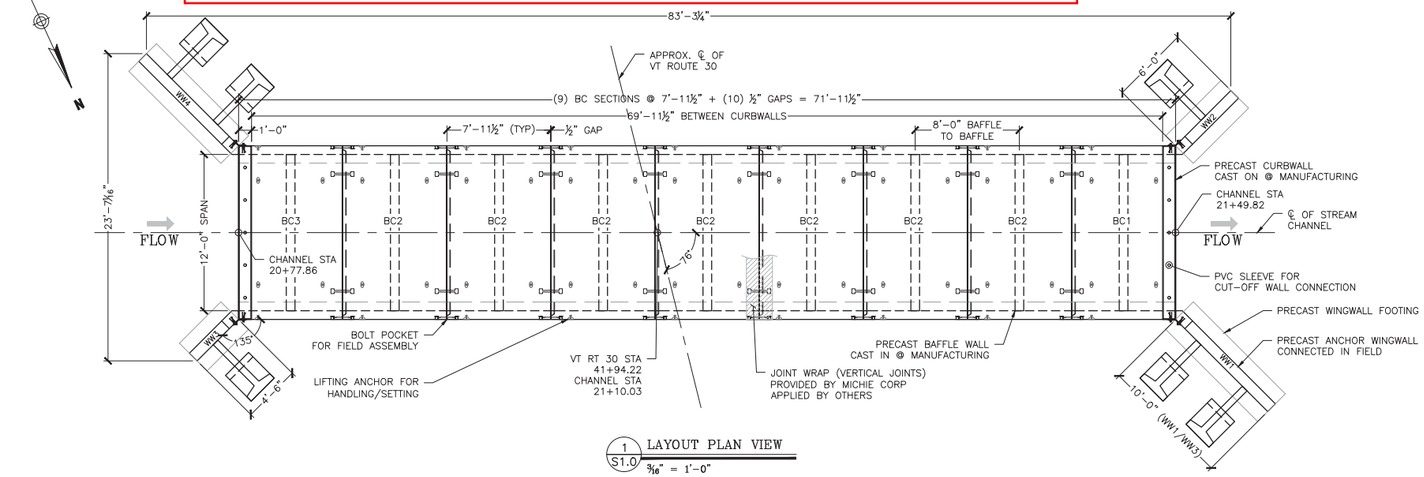

1 / S1.0 LAYOUT PLAN VIEW
3/16" = 1'-0"

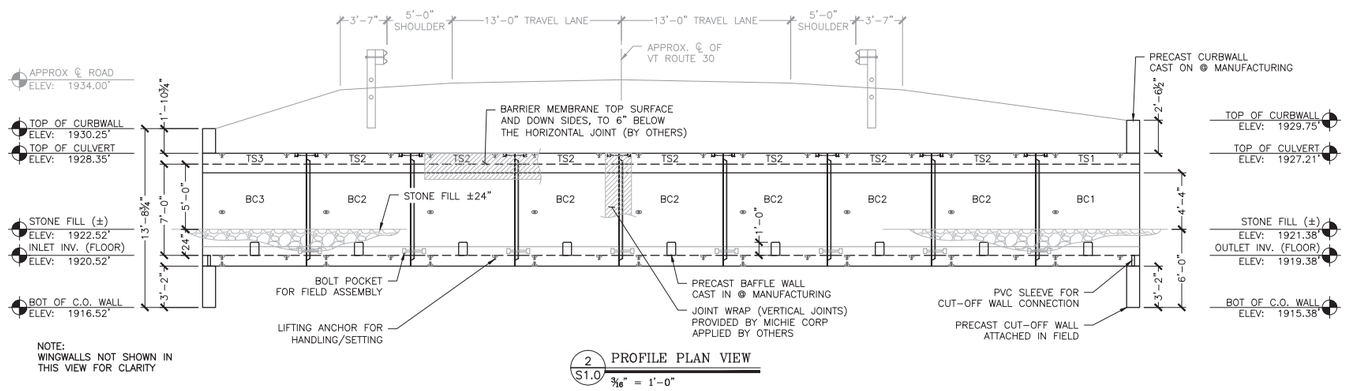

NOTE:
WINGWALLS NOT SHOWN IN THIS VIEW FOR CLARITY

2 / S1.0 PROFILE PLAN VIEW
3/16" = 1'-0"

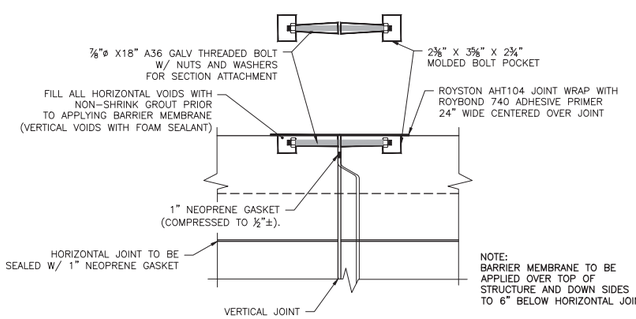

NOTE:
BARRIER MEMBRANE TO BE APPLIED OVER TOP OF STRUCTURE AND DOWN SIDES TO 6" BELOW HORIZONTAL JOINT

3 / S1.0 BOX CULVERT JOINT CONNECTION DETAIL
1" = 1'-0"

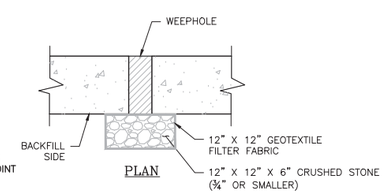

4 / S1.0 WEEPHOLE BACKFILL DETAIL
1" = 1'-0"

BILL OF MATERIALS

QTY	DESCRIPTION	IN STOCK	ORDERED FROM
	ITEMS CAST-IN		
108	RL-24 4TON X 3.5" PLATE ANCHORS		
16	1-5/NC 6X6 DOUBLE WW ANCHORS		
22	5-TON UTILITY ANCHORS		
10	2.5" DIA X 12" PVC SLEEVES		
16LF	4" DIA PVC SLEEVES (WEEP)		
	ITEMS FOR PRESHIPPING/PREP.		
330LF	1" CLOSED CELL NEOPRENE (25LF/ROLL)		
2 GAL	RED ADHESIVE (PRESS-SEAL 1-326)		
	ITEMS TO SHIP TO THE JOB		
20	4"X4"X.25" PLASTIC SHIMS		
240LF	ROYSTON 24" JOINT WRAP (50LF/ROLL)		
4 GAL	ROYSTON 740 ADHESIVE PRIMER (1 GAL/ROLL)		
48	7/8" X 18" GALV THREADED ROD W/ 2 NUTS, 4 WASHERS		
8	135 DEG (1/2"T X 10" X 14") GALV. WW PLATES W/ HARDWARE		
10	#6 X 14" DOWEL BARS		

GENERAL NOTES:

1. THE PLANS ARE INTENDED TO BE DRAWN TO SCALE. HOWEVER, IF A CRITICAL DIMENSION IS NOT PROVIDED, MICHIE CORPORATION SHOULD BE CONTACTED FOR VERIFICATION.

2. IF ANY OF THE WORK TO BE DONE AS SHOWN ON THE DRAWINGS DOES NOT CORRESPOND WITH THE EXISTING FIELD CONDITIONS, CONTACT THE ENGINEER PRIOR TO PROCEEDING WITH THE WORK IN QUESTION.

3. FIELD-VERIFY ALL ELEVATIONS PRIOR TO THE START OF CONSTRUCTION. IF THERE ARE ANY DISCREPANCIES, CONSULT THE ENGINEER PRIOR TO PROCEEDING WITH THE WORK IN QUESTION.

4. MAINTAIN MINIMUM 60 DEGREE SLING ANGLE WHEN HANDLING PRECAST COMPONENTS.

5. PRECAST COMPONENTS SHALL REACH A MINIMUM COMPRESSIVE STRENGTH OF 3,000 PSI PRIOR TO STRIPPING, AND THE MINIMUM DESIGN COMPRESSIVE STRENGTH PRIOR TO SHIPPING, UNLESS OTHERWISE DIRECTED BY THE ENGINEER.

6. ALL JOINTS AND VOIDS SHALL BE FILLED WITH NON-SHRINK GROUT. VERTICAL SURFACE VOIDS MAY BE FILLED WITH FOAM SEALANT.

7. SHOP DRAWINGS WERE DEVELOPED USING THE FOLLOWING RESOURCES FOR THE CONTRACT:
- "PROPOSED IMPROVEMENT BRIDGE PROJECT, TOWN OF WINHALL, VT ROUTE 30, BRIDGE NUMBERS 47 AND 52", PAGES 1-60 OF 60, PREPARED BY STANTEC CONSULTING SERVICES, INC. OF SOUTH BURLINGTON, VT. DATED 9/25/2014 WITH NO REVISION DATE.

8. IF THERE IS ADDITIONAL INFORMATION PERTINENT TO THE FABRICATION AND INSTALLATION OF THESE UNITS THAT IS NOT CONTAINED WITHIN THE RESOURCES LISTED ABOVE IT SHALL BE BROUGHT TO THE ATTENTION OF MICHIE CORPORATION. FAILURE TO MAKE SUCH ADDITIONAL INFORMATION AVAILABLE SHALL RELIEVE MICHIE CORPORATION OF ALL LIABILITIES ARISING FROM ERRORS OR OMISSIONS RELATED TO THE OMITTED INFORMATION.

BOX CULVERT NOTES:

1. BOX CULVERT SECTIONS ARE DESIGNED IN ACCORDANCE WITH
- AASHTO "LRFD BRIDGE DESIGN SPECIFICATIONS", 6TH EDITION.
- VTRANS 2011 "STANDARD SPECIFICATIONS FOR CONSTRUCTION".

2. THE FOLLOWING CRITERIA WAS USED FOR DESIGN:
- LIVE LOAD: HL-93
- EARTH COVER: 5-7 FEET
- BACKFILL SOIL UNIT WEIGHT: 140 PCF
- BACKFILL SOIL FRICTION ANGLE: 34 DEGREES
- CONCRETE STRENGTH: 5,000 PSI
- STEEL YIELD STRENGTH: 60,000 PSI

3. CONCRETE SHALL BE SELF-CONSOLIDATING CONFORMING TO ASTM C260 WITH A MINIMUM 28-DAY COMPRESSIVE STRENGTH OF 5,000 PSI. AGGREGATE SHALL CONFORM TO ASTM C-33 WITH A MAXIMUM DIAMETER OF 3/4". CEMENT SHALL CONFORM TO ASTM C150.

4. REINFORCING SHALL BE GRADE 60 DEFORMED BLACK BARS CONFORMING TO ASTM A-615. ALL BARS SHALL BE BENT COLD.

5. ALL EXPOSED EDGES EXCEPT WHERE NOTED SHALL BE CHAMFERED 3/4".

6. SUBGRADE PREPARATION SHALL CONFORM TO VTRANS 204.07 BEDDING FOR STRUCTURES. FOOTINGS SHALL BE PLACED AT ELEVATIONS SHOWN ON A MINIMUM OF 1'-0" OF CRUSHED STONE CONFORMING TO VTRANS 704.05(A). ALL TOPSOIL, LOOSE FILL, AND DELETERIOUS MATERIALS SHALL BE REMOVED BEFORE PLACING MATERIAL.

7. BACKFILL MATERIAL SHALL CONFORM TO VTRANS SECTION 704.08 GRANULAR BACKFILL FOR STRUCTURES. BACKFILL SHALL EXTEND FOR A MINIMUM DISTANCE OF 3'-0" BEYOND THE HORIZONTAL LIMITS OF THE STRUCTURE. PLACEMENT SHALL CONFORM TO VTRANS SECTION 204.08.

8. EXPOSED SURFACES SHOULD BE COATED WITH VTRANS APPROVED WATER REPELLENT (SUPPLIED BY OTHERS).

9. EACH SECTION SHALL BE PROVIDED WITH BOLT POCKETS FOR ATTACHMENT TO ADJACENT SECTIONS. 7/8" DIA. GALV. THREADED ROD, WASHERS AND NUTS SHALL BE PROVIDED FOR ASSEMBLY IN THE FIELD. CLOSED-CELL NEOPRENE JOINT SEALANT SHALL BE USED IN ALL JOINTS UNLESS NOTED OTHERWISE.

10. 2FT WIDE ROYSTON JOINT WRAP WITH ADHESIVE PROVIDED BY MICHIE CORP, INSTALLED BY OTHERS, CENTER ON JOINT AFTER GROUTING. BARRIER MEMBRANE PROVIDED AND INSTALLED BY OTHERS OVER TOP OF STRUCTURE AND DOWN THE SIDES TO 6" BELOW THE HORIZONTAL JOINT.

CURBWALL NOTES:

1. CURBWALL CONCRETE SHALL BE SELF-CONSOLIDATING CONFORMING TO ASTM C260 WITH A MINIMUM 28-DAY COMPRESSIVE STRENGTH OF 5,000 PSI. AGGREGATE SHALL CONFORM TO ASTM C-33 WITH A MAXIMUM DIAMETER OF 3/4". CEMENT SHALL CONFORM TO ASTM C150.

2. REINFORCING SHALL BE GRADE 60 EPOXY COATED AND SHALL CONFORM TO ASTM A-775. ALL BARS SHALL BE BENT COLD.

3. ALL EXPOSED EDGES EXCEPT WHERE NOTED SHALL BE CHAMFERED 3/4".

4. EXPOSED SURFACES SHOULD BE COATED WITH VTRANS APPROVED WATER REPELLENT (SUPPLIED BY OTHERS).

WING WALL NOTES:

1. SECTIONS ARE DESIGNED IN ACCORDANCE WITH
- AASHTO "LRFD BRIDGE DESIGN SPECIFICATIONS", 6TH EDITION
- VTRANS 2011 "STANDARD SPECIFICATIONS FOR CONSTRUCTION".

2. THE FOLLOWING SOIL PROPERTIES WERE USED IN THE DESIGN:

	SOIL WEIGHT [PCF]	FRICTION ANGLE [DEG]
• RETAINED SOIL	140	34
• FOUNDATION SOIL	140	40

- LIVE LOAD SURCHARGE = 2FT EQUIVALENT HEIGHT OF SOIL
- BACKSLOPE ANGLE: 2:1
- FACTORED BEARING RESISTANCE = 6000PSF (SERVICE), 15400PSF (STRENGTH)

3. CONCRETE SHALL BE SELF-CONSOLIDATING CONFORMING TO ASTM C260 WITH A MINIMUM 28-DAY COMPRESSIVE STRENGTH OF 5,000 PSI. AGGREGATE SHALL CONFORM TO ASTM C-33 WITH A MAXIMUM DIAMETER OF 3/4". CEMENT SHALL CONFORM TO ASTM C150.

4. UNLESS NOTED OTHERWISE, REINFORCING SHALL BE GRADE 60 DEFORMED BLACK BARS CONFORMING TO ASTM A-615. WHERE REQUIRED, EPOXY COATED REINFORCING SHALL CONFORM TO ASTM A-775. ALL BARS SHALL BE BENT COLD.

5. ALL EXPOSED EDGES EXCEPT WHERE NOTED SHALL BE CHAMFERED 3/4".

6. BACKFILL MATERIAL SHALL CONFORM TO VTRANS SECTION 704.08 GRANULAR BACKFILL FOR STRUCTURES. PLACEMENT SHALL CONFORM TO VTRANS SECTION 204.08.

7. ALL EXPOSED EDGES OF CONCRETE SHALL BE COATED WITH A VTRANS APPROVED WATER REPELLANT (BY OTHERS).

8. SUBGRADE PREPARATION SHALL CONFORM TO VTRANS 204.07 BEDDING FOR STRUCTURES. FOOTINGS SHALL BE PLACED AT ELEVATIONS SHOWN ON A MINIMUM OF 1'-0" OF CRUSHED STONE CONFORMING TO VTRANS 704.05(A). ALL TOPSOIL, LOOSE FILL, AND DELETERIOUS MATERIALS SHALL BE REMOVED BEFORE PLACING BACKFILL.

PRECAST CONCRETE FOOTING NOTES:

1. FOOTING CONCRETE SHALL BE SELF-CONSOLIDATING CONFORMING TO ASTM C260 WITH A MINIMUM 28-DAY COMPRESSIVE STRENGTH OF 5,000 PSI. AGGREGATE SHALL CONFORM TO ASTM C-33 WITH A MAXIMUM DIAMETER OF 3/4". CEMENT SHALL CONFORM TO ASTM C150.

2. UNLESS NOTED OTHERWISE, REINFORCING SHALL BE GRADE 60 DEFORMED BLACK BARS CONFORMING TO ASTM A-615. ALL BARS SHALL BE BENT COLD.

3. ALL EXPOSED EDGES EXCEPT WHERE NOTED SHALL BE CHAMFERED 3/4".

4. SUBGRADE PREPARATION FOR THE WINGWALL FOOTINGS SHALL CONFORM TO VTRANS 204.07 BEDDING FOR STRUCTURES. FOOTINGS SHALL BE PLACED AT ELEVATIONS SHOWN ON A MINIMUM OF 1'-0" OF CRUSHED STONE CONFORMING TO VTRANS 704.05(A). ALL TOPSOIL, LOOSE FILL, AND DELETERIOUS MATERIALS SHALL BE REMOVED BEFORE PLACING BACKFILL. SUBGRADE PREPARATION FOR THE CUT-OFF WALLS PER DETAIL ON SHEET 41 OF THE CONTRACT PLANS.

STATE OF VERMONT
DARYL D. BURNS
No. 9031
Structural I
LICENSED
PROFESSIONAL ENGINEER

3/31/15

APPROVED: Approval of drawings and/or procedures indicates concurrence with the information presented and does not relieve the Contractor or Fabricator of compliance with all specifications and code requirements	
APPROVED AS NOTED	
REVISE AND RESUBMIT	✓
NOT REVIEWED	

Stantec

Date: 4/10/15

By:

This review by Stantec Consulting Services Inc. is for the sole purpose of ascertaining conformance with the general design concept. This review shall not mean that Stantec Consulting Services Inc approves the detail design inherent in the shop drawings, responsibility for which shall remain with the Contractor. Submitting same, and such review shall not relieve the Contractor of his responsibility for errors or omissions in the shop drawing or of his responsibility for meeting all requirements of the Contract Documents. The contractor is responsible for dimensions to be confirmed and correlated at the job site, for information that pertains solely to the fabrication processes or to techniques of construction and installation and for coordination of the work of all subtrades.

LIST OF SHEETS:

S1.0 LAYOUT/PROFILE VIEW & DETAILS
S2.0 FOOTING LAYOUT/DETAILS AND END ELEVATIONS
S3.0 BOX CULVERT DETAILS
S4.0 WINGWALL DETAILS
S5.0 ANCHOR DETAILS

No.	Date	Revision	By
1	XXXXXXXX	XX	XXX

MICHIE CORPORATION
173 BUXTON INDUSTRIAL DRIVE - PO BOX 870
HENNIKER, NH 03242
PHONE: 603-428-3218
FAX: 603-497-2426
WWW.MICHIECORP.COM

Bridge #52 - VT Route 30 - VAOT STP Culv(31) Winhall, VT

12x7' Open Top Box Culvert - Layout and Profile Views

Scale: AS SHOWN
Checked by: PJL
Drawn by: CTP
Designed by: PJL/CTP
Project No. 5778
Date: 2/24/015

Prepared for:
Renaud Brothers, Inc.
283 Fort Bridgeman Rd #2
Vernon, VT 05354

DWG NO.
S1.0

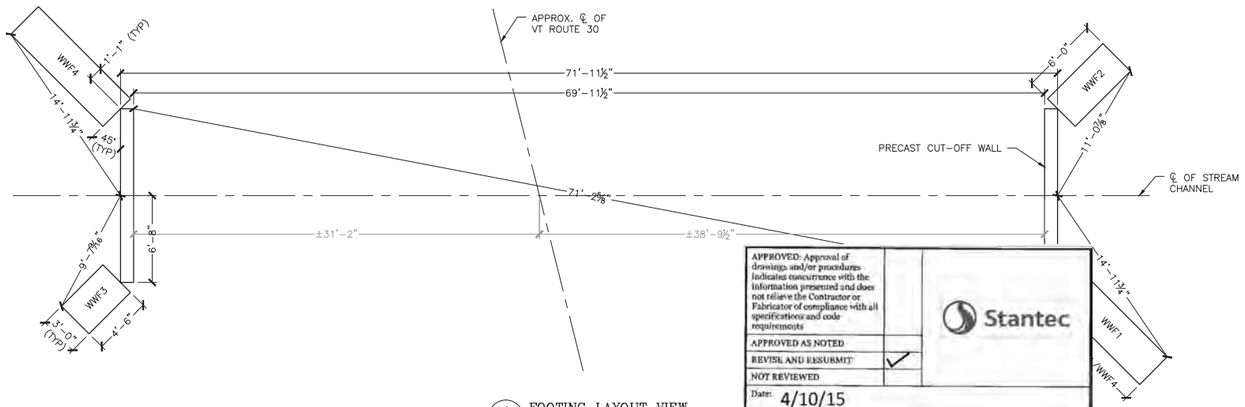

1 S2.0 FOOTING LAYOUT VIEW
3/16" = 1'-0"

APPROVED: Approval of drawings and/or procedures indicates concurrence with the information presented and does not relieve the Contractor or Fabricator of compliance with all specifications and code requirements		Stantec
APPROVED AS NOTED		
REVISE AND RESUBMIT	✓	
NOT REVIEWED		
Date: 4/10/15		
By:		

This review by Stantec Consulting Services Inc. is for the sole purpose of ascertaining conformance with the general design concept. This review shall not mean that Stantec Consulting Services Inc. approves the detail design inherent in the shop drawings, responsibility for which shall remain with the Contractor. Submitting same, and such review shall not relieve the Contractor of his responsibility for errors or omissions in the shop drawing or of his responsibility for meeting all requirements of the Contract Documents. The contractor is responsible for dimensions to be confirmed and correlated at the job site, for information that pertains solely to the fabrication processes or to techniques of construction and installation and for coordination of the work of all subtrades.

STATE OF VERMONT
DARYL D. BURNS
No. 9031
Structural I
LICENSED
PROFESSIONAL ENGINEER

3/31/15

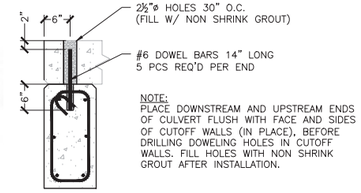

NOTE:
PLACE DOWNSTREAM AND UPSTREAM ENDS OF CULVERT FLUSH WITH FACE AND SIDES OF CUTOFF WALLS (IN PLACE). BEFORE DRILLING DOWELING HOLES IN CUTOFF WALLS. FILL HOLES WITH NON SHRINK GROUT AFTER INSTALLATION.

4 S1.0 CUTOFF WALL CONNECTION DETAIL
¾" = 1'-0"

CUT-OFF WALL REINFORCING (COUNTS REPRESENT 1 UNIT)						
LOCATION	MARK	QTY	SIZE	SPACING	TYPE	CUT LENGTH
C.O. WALL	CO1	6	#5	AS SHOWN	STRAIGHT	13'-0"
C.O. WALL	CO2	13	#4	12"O.C.	STIRRUP	7'-6 1/8"

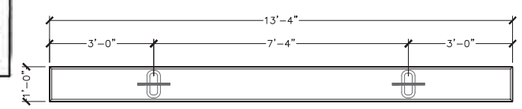

6 S2.0 C.O. WALL PLAN VIEW
½" = 1'-0"

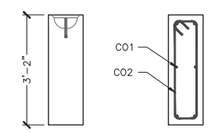

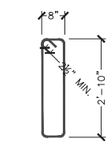

#4 STIRRUP DETAIL

CUT-OFF WALL - 2 REQ'D
ITEM 275800
UNIT WEIGHT AND VOLUME:
FOOTING: 1.56CY (6,550#)

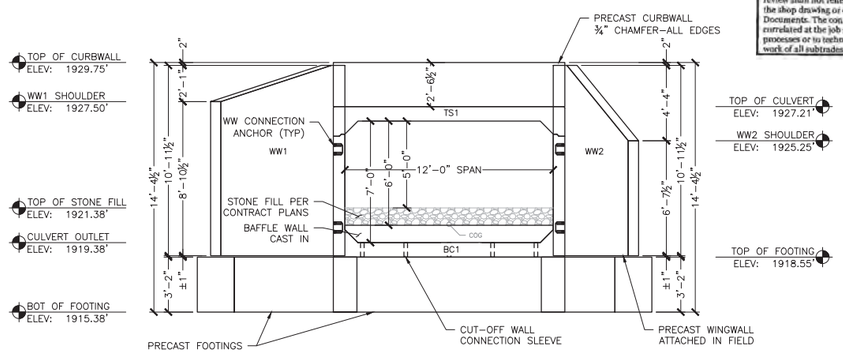

2 S2.0 OUTLET END ELEVATION
¼" = 1'-0"

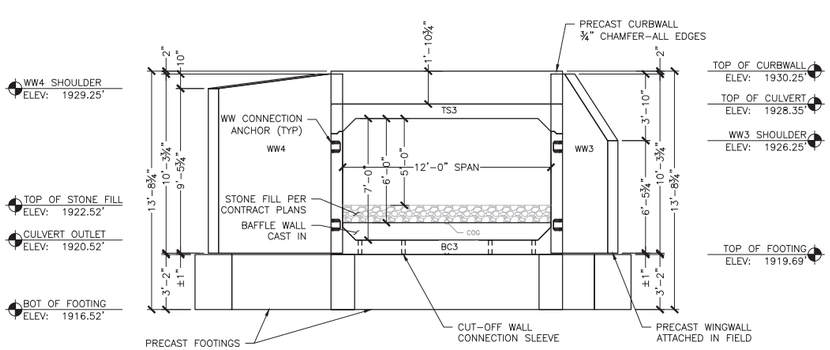

3 S2.0 INLET END ELEVATION
¼" = 1'-0"

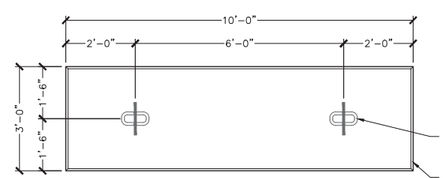

WWF1/WWF4 - 2 REQ'D
ITEM 282401
UNIT WEIGHT AND VOLUME:
FOOTING: 3.52CY (14,790#)

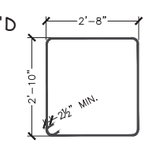

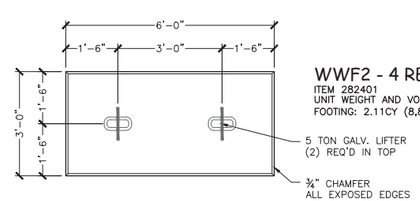

WWF2 - 4 REQ'D
ITEM 282401
UNIT WEIGHT AND VOLUME:
FOOTING: 2.11CY (8,860#)

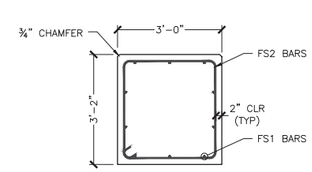

6 S2.0 WINGWALL FOOTING SECTION
½" = 1'-0"

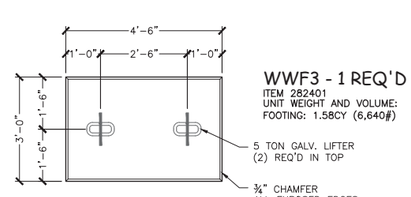

WWF3 - 1 REQ'D
ITEM 282401
UNIT WEIGHT AND VOLUME:
FOOTING: 1.58CY (6,640#)

5 S2.0 WWF PLAN VIEW
½" = 1'-0"

WWF1/WWF4 REINFORCING (COUNTS REPRESENT 1 UNIT)						
LOCATION	MARK	QTY	SIZE	SPACING	TYPE	CUT LENGTH
FOOTING	FS1	10	#5	AS SHOWN	STRAIGHT	9'-8"
FOOTING	FS2	10	#4	12"O.C.	STIRRUP	11'-3"

WWF2 REINFORCING (COUNTS REPRESENT 1 UNIT)						
LOCATION	MARK	QTY	SIZE	SPACING	TYPE	CUT LENGTH
FOOTING	FS1	10	#5	AS SHOWN	STRAIGHT	5'-8"
FOOTING	FS2	6	#4	12"O.C.	STIRRUP	11'-3"

WWF3 REINFORCING (COUNTS REPRESENT 1 UNIT)						
LOCATION	MARK	QTY	SIZE	SPACING	TYPE	CUT LENGTH
FOOTING	FS1	10	#5	AS SHOWN	STRAIGHT	4'-2"
FOOTING	FS2	5	#4	12"O.C.	STIRRUP	11'-3"

No.	Date	Revision	By
△	XXXXXXXXX	XX	XXX

MICHIE CORPORATION
173 BUXTON INDUSTRIAL DRIVE - PO BOX 870
HENNIKER, NH 03242
PHONE: 603-428-3218
FAX: 603-428-3226
WWW.MICHIECORP.COM

Bridge #52 - VT Route 30 - VAOT STP Culv(31)
Winhall, VT

12'x7' Open Top Box Culvert - Footing Layout & Elevations

Scale: AS SHOWN
Project No. 5778
Date: 2/24/2015
Designed by: PJL/CFP
Drawn by: CFP
Checked by: PJL

Prepared for:
Renaud Brothers, Inc.
283 Fort Bridgeman Rd #2
Vernon, VT 05354

DWG NO.
S2.0

S:\PROJECTS\RENAUD BROTHERS\WINHALL, VT - VTRANS #STP CULV (31)\BRIDGE 52 PROJ 5778\DWGS\BC 52 PROJ 5778.DWG 3/26/2015 3:28 PM

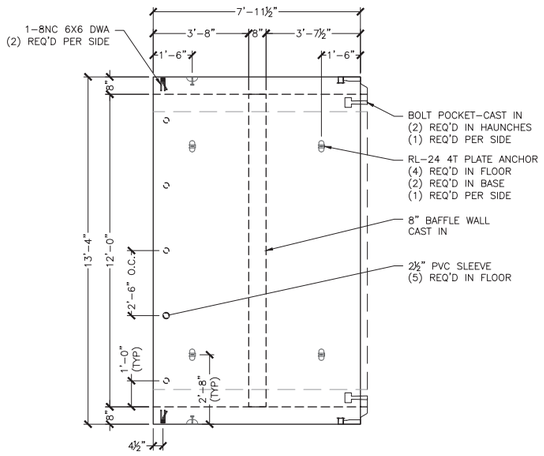

1 S3.0 BC3 PLAN VIEW
⅜" = 1'-0"

BC3 - 1 REQ'D

ITEM 281207
UNIT WEIGHT AND VOLUME:
CULVERT: 5.62CY (23,600#)
BAFFLE WALL: .28CY (1,180#)
TOTAL WEIGHT: 24,780#

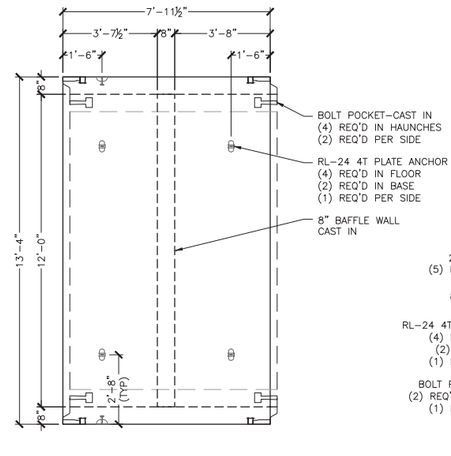

3 S3.0 BC2 PLAN VIEW
⅜" = 1'-0"

BC2 - 7 REQ'D

ITEM 281207
UNIT WEIGHT AND VOLUME:
CULVERT: 5.62CY (23,600#)
BAFFLE WALL: .28CY (1,180#)
TOTAL WEIGHT: 24,780#

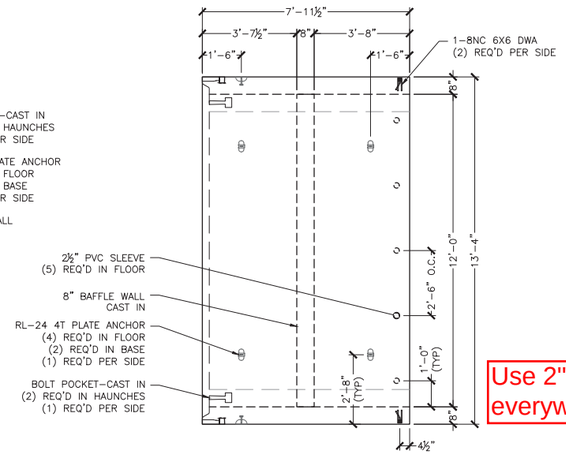

5 S3.0 BC1 PLAN VIEW
⅜" = 1'-0"

BC1 - 1 REQ'D

ITEM 281207
UNIT WEIGHT AND VOLUME:
CULVERT: 5.62CY (23,600#)
BAFFLE WALL: .28CY (1,180#)
TOTAL WEIGHT: 24,780#

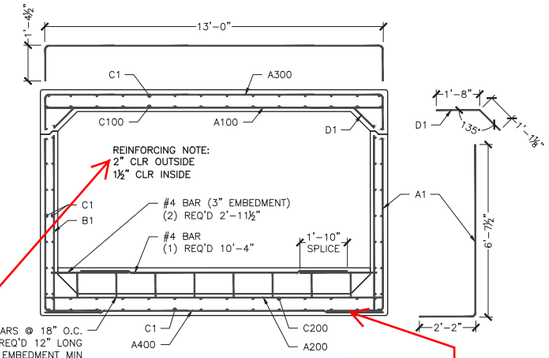

8 S3.0 REINFORCING SECTION
⅜" = 1'-0"

Use 2" min CLR everywhere

Design summary says 31" min lap

TS2/BC2 REINFORCING SCHEDULE (COUNTS REFLECT 1 UNIT)						
LOCATION	MARK	QTY	SIZE	SPACING	TYPE	CUT LENGTH
TOP SLAB (INT)	A100	14	#8	7"	STRAIGHT	13'-0"
BOT. SLAB (INT)	A200	8	#5	12"	STRAIGHT	13'-0"
TOP SLAB (EXT)	A300	8	#4	12"	"U" BAR	15'-6½"
BOT. SLAB (EXT)	A400	11	#6	9"	STRAIGHT	13'-0"
WALL (EXT)	A1	22	#6	9"	"L" BAR	8'-8¼"
WALL (INT)	B1	16	#4	12"	STRAIGHT	6'-9"
LONGIT. TOP (EXT)	C1	14	#4	12"	STRAIGHT	7'-7"
LONGIT. TOP (INT)	C100	14	#4	12"	STRAIGHT	7'-7"
LONGIT. BOT. (INT)	C200	14	#4	12"	STRAIGHT	7'-7"
LONGIT. BOT (EXT)	C1	14	#4	12"	STRAIGHT	7'-7"
LONGIT. WALL (EXT)	C1	14	#4	12"	STRAIGHT	7'-7"
LONGIT. WALL (INT)	C1	14	#4	12"	STRAIGHT	7'-7"
TOP SLAB (HAUNCH)	D1	28	#4	7"	BENT BARS	2'-9¼"

TS1/BC1 REINFORCING SCHEDULE (COUNTS REFLECT 1 UNIT)						
LOCATION	MARK	QTY	SIZE	SPACING	TYPE	CUT LENGTH
TOP SLAB (INT)	A100	14	#8	7"	STRAIGHT	13'-0"
BOT. SLAB (INT)	A200	8	#5	12"	STRAIGHT	13'-0"
TOP SLAB (EXT)	A300	8	#4	12"	"U" BAR	15'-6½"
BOT. SLAB (EXT)	A400	11	#6	9"	STRAIGHT	13'-0"
WALL (EXT)	A1	22	#6	9"	"L" BAR	8'-8¼"
WALL (INT)	B1	16	#4	12"	STRAIGHT	6'-9"
LONGIT. TOP (EXT)	C1	14	#4	12"	STRAIGHT	7'-7"
LONGIT. TOP (INT)	C100	14	#4	12"	STRAIGHT	7'-4"
LONGIT. BOT. (INT)	C200	14	#4	12"	STRAIGHT	7'-4"
LONGIT. BOT (EXT)	C1	14	#4	12"	STRAIGHT	7'-7"
LONGIT. WALL (EXT)	C1	14	#4	12"	STRAIGHT	7'-7"
LONGIT. WALL (INT)	C1	14	#4	12"	STRAIGHT	7'-4"
TOP SLAB (HAUNCH)	D1	28	#4	7"	BENT BARS	2'-9¼"
TOP SLAB	DBS1	28	#4	12"	"L" DOWELS	2'-0"
CURBWALL	DBI1	28	#4	12"	STRAIGHT	2'-4½"
CURBWALL	CWS1	6	#4	12"	STRAIGHT	13'-0"

TS3/BC3 REINFORCING SCHEDULE (COUNTS REFLECT 1 UNIT)						
LOCATION	MARK	QTY	SIZE	SPACING	TYPE	CUT LENGTH
TOP SLAB (INT)	A100	14	#8	7"	STRAIGHT	13'-0"
BOT. SLAB (INT)	A200	8	#5	12"	STRAIGHT	13'-0"
TOP SLAB (EXT)	A300	8	#4	12"	"U" BAR	15'-6½"
BOT. SLAB (EXT)	A400	11	#6	9"	STRAIGHT	13'-0"
WALL (EXT)	A1	22	#6	9"	"L" BAR	8'-8¼"
WALL (INT)	B1	16	#4	12"	STRAIGHT	6'-9"
LONGIT. TOP (EXT)	C1	14	#4	12"	STRAIGHT	7'-7"
LONGIT. TOP (INT)	C100	14	#4	12"	STRAIGHT	7'-10"
LONGIT. BOT. (INT)	C200	14	#4	12"	STRAIGHT	7'-10"
LONGIT. BOT (EXT)	C1	14	#4	12"	STRAIGHT	7'-7"
LONGIT. WALL (EXT)	C1	14	#4	12"	STRAIGHT	7'-7"
LONGIT. WALL (INT)	C1	14	#4	12"	STRAIGHT	7'-10"
TOP SLAB (HAUNCH)	D1	28	#4	7"	BENT BARS	2'-9¼"
TOP SLAB	DBS1	28	#4	12"	"L" DOWELS	2'-0"
CURBWALL	DBI1	28	#4	12"	STRAIGHT	1'-8¼"
CURBWALL	CWS1	6	#4	12"	STRAIGHT	13'-0"

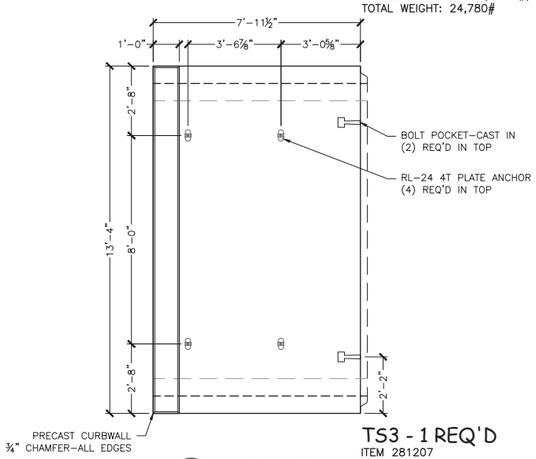

2 S3.0 TS3 ELEV. VIEW
⅜" = 1'-0"

TS3 - 1 REQ'D

ITEM 281207
UNIT WEIGHT AND VOLUME:
TOP SLAB: 3.76CY (15,790#)
CURBWALL: .94CY (3,950#)
TOTAL WEIGHT: 19,740#

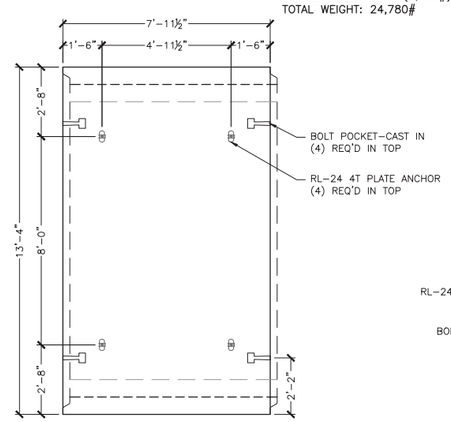

4 S3.0 TS2 ELEV. VIEW
⅜" = 1'-0"

TS2 - 7 REQ'D

ITEM 281207
UNIT WEIGHT AND VOLUME:
TOP SLAB: 3.76CY (15,790#)

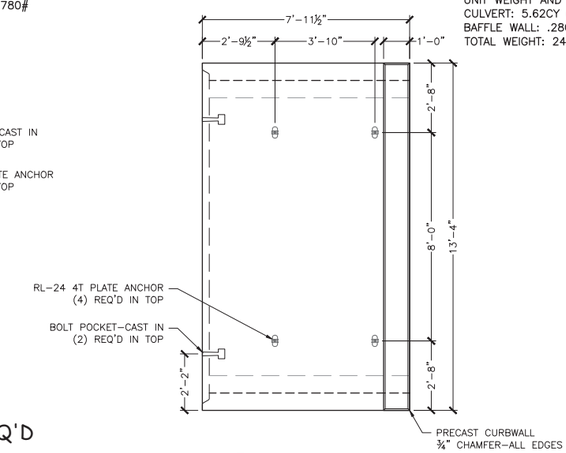

6 S3.0 TS1 ELEV. VIEW
⅜" = 1'-0"

TS1 - 1 REQ'D

ITEM 281207
UNIT WEIGHT AND VOLUME:
TOP SLAB: 3.76CY (15,790#)
CURBWALL: .94CY (3,950#)
TOTAL WEIGHT: 19,740#

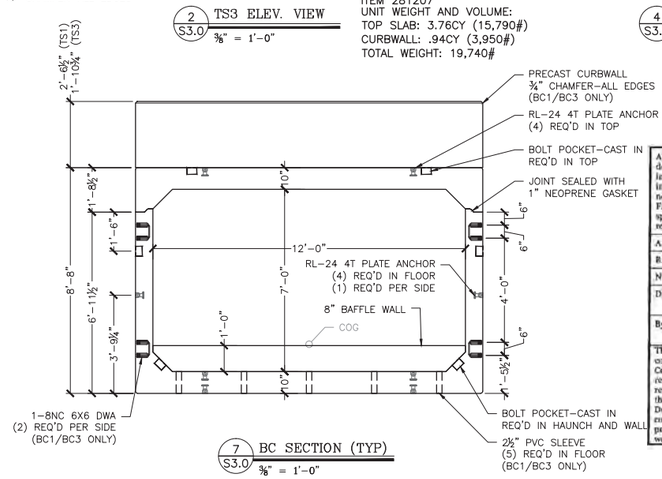

7 S3.0 BC SECTION (TYP)
⅜" = 1'-0"

APPROVED: Approval of drawings and/or procedures indicates concurrence with the information presented and does not relieve the Contractor or Fabricator of compliance with all specifications and code requirements

APPROVED AS NOTED	
REVISE AND RESUBMIT	✓
NOT REVIEWED	

Stantec

Date: 4/10/15

By: [illegible]

This review by Stantec Consulting Services Inc. is for the sole purpose of ascertaining conformance with the general design concept. This review shall not mean that Stantec Consulting Services Inc approves the detail design inherent in the shop drawings, responsibility for which shall remain with the Contractor. Submitting same, and such review shall not relieve the Contractor of his responsibility for errors or omissions in the shop drawing or of his responsibility for meeting all requirements of the Contract Documents. The contractor is responsible for dimensions to be confirmed and correlated at the job site, for information that pertains solely to the fabrication processes or to techniques of construction and installation and for coordination of the work of all subtrades.

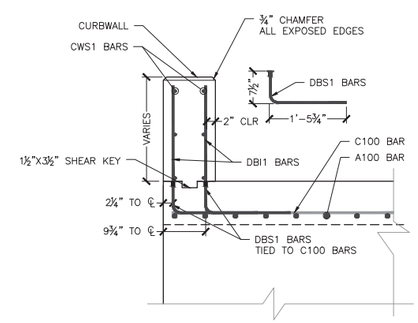

9 S3.0 CURBWALL REINFORCING SECTION
¾" = 1'-0"

STATE OF VERMONT
DARYL D. BURNS
No. 9031
Structural I
LICENSED
PROFESSIONAL ENGINEER

3/31/15

No.	Date	Revision	By
Δ	XXXXXXXXX	XX	XXX

MICHIE CORPORATION
173 BUXTON INDUSTRIAL DRIVE - PO BOX 870
HENNIKER, NH 03242
PHONE: 603-497-2218
FAX: 603-497-2268
WWW.MICHIECORP.COM

Bridge #52 - VT Route 30 - VAOT STP Culv(31)
Winhall, VT

12'x7' Open Top Box Culvert - Footing Layout & Elevations

Project No. 5778
Date: 2/24/2015
Designed by: PJL/CFP
Drawn by: CFP
Checked by: PJL
Scale: AS SHOWN

Prepared for:
Renaud Brothers, Inc.
283 Fort Bridgeman Rd #2
Vernon, VT 05354

DWG NO.
S3.0

C:\PROJECTS\RENAUD BROTHERS\WINHALL, VT - VARIOUS JOBS\CULV(31)\BRIDGE 52\ BRIDGE 52 - BOX CULVERT.DWG\S3.0\S3.0\BC3 JOB, BY: 3/26/2015 2:26 PM

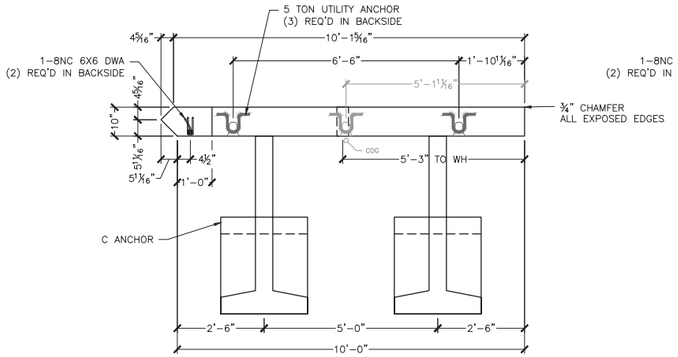

1 S4.0 WW4 PLAN VIEW
½" = 1'–0"

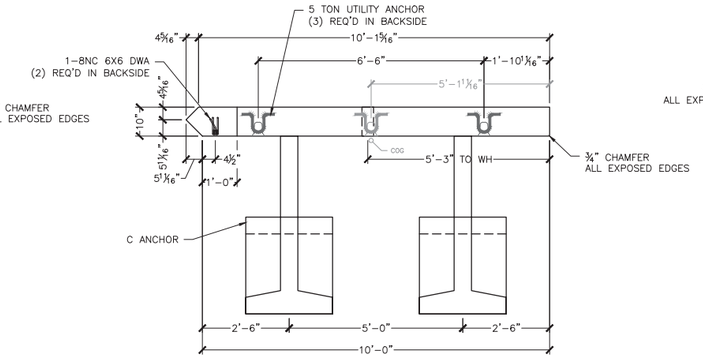

3 S4.0 WW1 PLAN VIEW
½" = 1'–0"

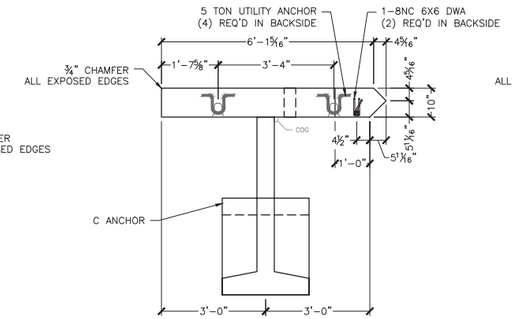

5 S4.0 WW2 PLAN VIEW
½" = 1'–0"

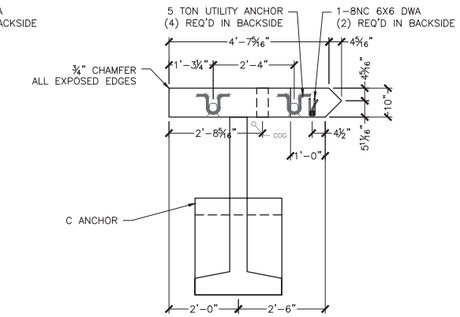

7 S4.0 WW3 PLAN VIEW
½" = 1'–0"

WW4 - 1 REQ'D

ITEM 275602
UNIT WEIGHT AND VOLUME:
WALL: 3.13CY (13,150#)
C ANCHOR: .48CY (2,020#)
TOTAL WEIGHT: 15,170#

WW1 - 1 REQ'D

ITEM 275602
UNIT WEIGHT AND VOLUME:
WALL: 3.17CY (13,320#)
C ANCHOR: .48CY (2,020#)
TOTAL WEIGHT: 15,340#

WW2 - 1 REQ'D

ITEM 275602
UNIT WEIGHT AND VOLUME:
WALL: 1.76CY (7,390#)
C ANCHOR: .48CY (2,020#)
TOTAL WEIGHT: 9,410#

WW3 - 1 REQ'D

ITEM 275602
UNIT WEIGHT AND VOLUME:
WALL: 1.31CY (5,500#)
C ANCHOR: .48CY (2,020#)
TOTAL WEIGHT: 7,520#

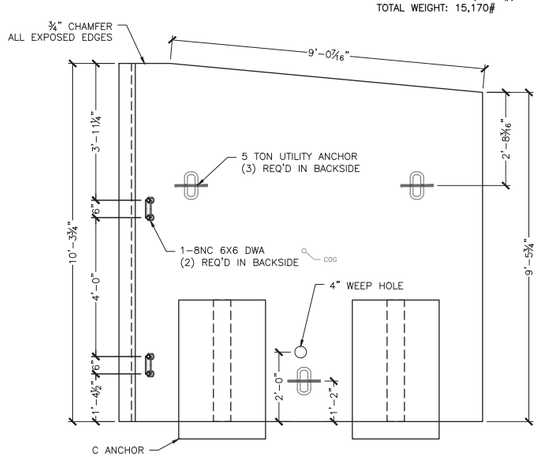

2 S4.0 WW4 ELEV. VIEW
½" = 1'–0" (Looking @ Backside)

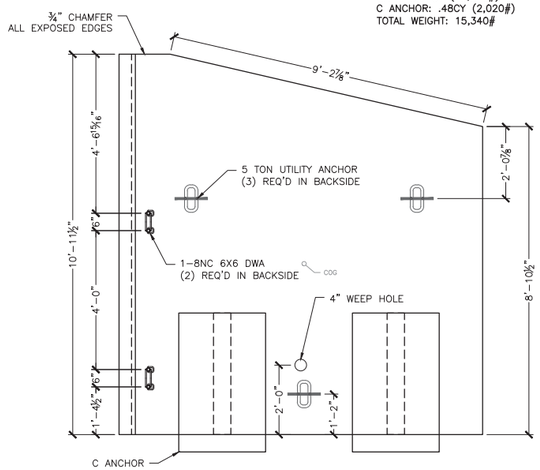

4 S4.0 WW1 ELEV. VIEW
½" = 1'–0" (Looking @ Backside)

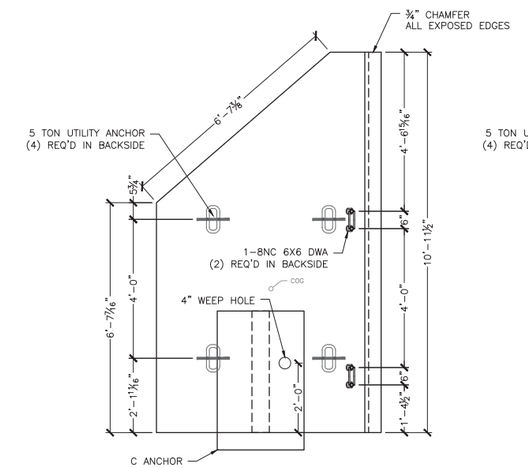

6 S4.0 WW2 ELEV. VIEW
½" = 1'–0" (Looking @ Backside)

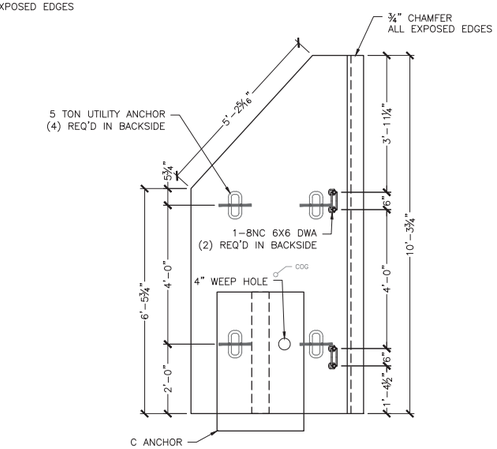

8 S4.0 WW3 ELEV. VIEW
½" = 1'–0" (Looking @ Backside)

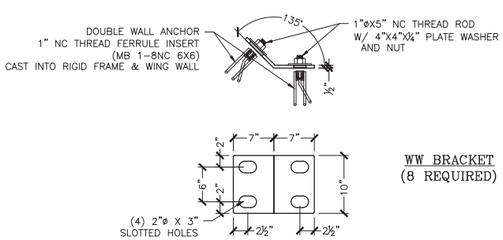

WW BRACKET
(8 REQUIRED)

PLATES TO BE MADE OF ½" MILD STEEL, PLASMA CUT, AND BENT AS REQUIRED. (HOT DIPPED GALVANIZED AFTER BENDING)

9 S4.0 WINGWALL BRACKET DETAIL
1" = 1'–0"

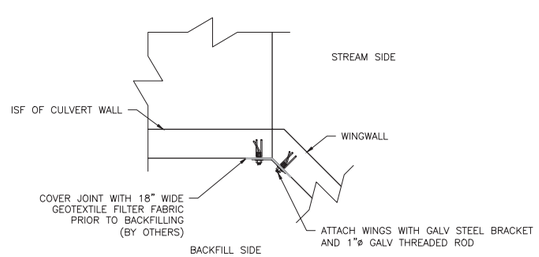

10 S4.0 BRIDGE TO WW JOINT DETAIL
½" = 1'–0"

APPROVED: Approval of drawings and/or procedures indicates concurrence with the information presented and does not relieve the Contractor or Fabricator of compliance with all specifications and code requirements

APPROVED AS NOTED

REVISE AND RESUBMIT ✓

NOT REVIEWED

Date: 4/10/15

By:

This review by Stantec Consulting Services Inc. is for the sole purpose of ascertaining conformance with the general design concept. This review shall not mean that Stantec Consulting Services Inc. approves the detail design inherent in the shop drawings, responsibility for which shall remain with the Contractor. Submitting same, and such review shall not relieve the Contractor of his responsibility for errors or omissions in the shop drawing or of his responsibility for meeting all requirements of the Contract Documents. The contractor is responsible for dimensions to be confirmed and correlated at the job site, for information that pertains solely to the fabrication processes or to techniques of construction and installation and for coordination of the work of all subtrades.

STATE OF VERMONT
DARYL D. BURNS
No. 9031
Structural I
LICENSED
PROFESSIONAL ENGINEER

3/31/15

No.	Date	Revision	By
1	XXXXXXXXX	XX	XXX

MICHIE CORPORATION
173 BUXTON INDUSTRIAL DRIVE - PO BOX 870
HENNIKER, NH 03242
PHONE: 603-428-3218
FAX: 603-428-3671
WWW.MICHIECORP.COM

Bridge #52 - VT Route 30 - VAOT STP Culv(31)
Winhall, VT

12'x7' Open Top Box Culvert - Wingwall Details

Scale: AS SHOWN

Project No. 5778

Designed by: PJL/CTP	Drawn by: CTP	Checked by: PJL
Date: 2/24/2015		

Prepared for:
Renaud Brothers, Inc.
283 Fort Bridgeman Rd #2
Vernon, VT 05354

DWG NO.
S4.0

NOTE: BAR COUNTS REPRESENT 1 UNIT.

WW4 REINFORCING SCHEDULE					
BAR MARK	LOCATION	TYPE	SIZE/SPACING	CUT LENGTH	# OF PCS
VERTICAL	OSF	STRAIGHT	#4 @ 12"	9'-11¾" TO 9'-1¾"	10
VERTICAL	ISF	STRAIGHT	#5 @ 12"	9'-11¾" TO 9'-1¾"	10
HORIZONTAL	OSF	STRAIGHT	#4 @ 12"	9'-11½"	10
HORIZONTAL	ISF	STRAIGHT	#4 @ 12"	9'-10¼"	10
DIAGONAL	FOLLOW SLOPE	STRAIGHT	#4	9'-0"	2

WW2 REINFORCING SCHEDULE					
BAR MARK	LOCATION	TYPE	SIZE/SPACING	CUT LENGTH	# OF PCS
VERTICAL	OSF	STRAIGHT	#4 @ 12"	10'-7½" TO 6'-3½"	6
VERTICAL	ISF	STRAIGHT	#5 @ 12"	10'-7½" TO 6'-3½"	6
HORIZONTAL	OSF	STRAIGHT	#4 @ 12"	5'-11½"	11
HORIZONTAL	ISF	STRAIGHT	#4 @ 12"	5'-10¼"	11
DIAGONAL	FOLLOW SLOPE	STRAIGHT	#4	6'-5"	2

WW3 REINFORCING SCHEDULE					
BAR MARK	LOCATION	TYPE	SIZE/SPACING	CUT LENGTH	# OF PCS
VERTICAL	OSF	STRAIGHT	#4 @ 12"	9'-11¾" TO 6'-1¾"	5
VERTICAL	ISF	STRAIGHT	#5 @ 12"	9'-11¾" TO 6'-1¾"	5
HORIZONTAL	OSF	STRAIGHT	#4 @ 12"	4'-5½"	10
HORIZONTAL	ISF	STRAIGHT	#4 @ 12"	4'-4¼"	10
DIAGONAL	FOLLOW SLOPE	STRAIGHT	#4	5'-0"	2

WW1 REINFORCING SCHEDULE					
BAR MARK	LOCATION	TYPE	SIZE/SPACING	CUT LENGTH	# OF PCS
VERTICAL	OSF	STRAIGHT	#4 @ 12"	9'-11¾" TO 8'-6½"	10
VERTICAL	ISF	STRAIGHT	#5 @ 12"	9'-11¾" TO 8'-6½"	10
HORIZONTAL	OSF	STRAIGHT	#4 @ 12"	9'-11½"	10
HORIZONTAL	ISF	STRAIGHT	#4 @ 12"	9'-10¼"	10
DIAGONAL	FOLLOW SLOPE	STRAIGHT	#4	9'-0"	2

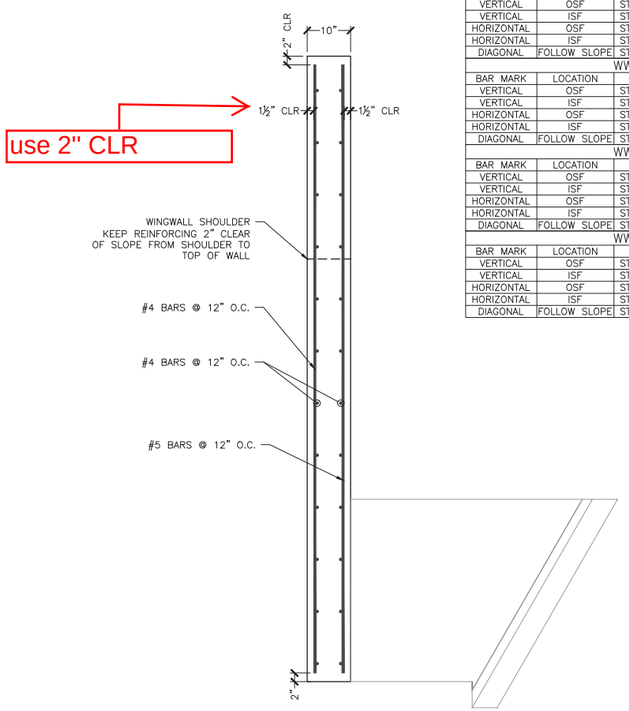

1 S5.0 WINGWALL REINFORCING (TYP)
¾" = 1'-0"

APPROVED: Approval of drawings and/or procedures indicates concurrence with the information presented and does not relieve the Contractor or Fabricator of compliance with all specifications and code requirements

APPROVED AS NOTED

REVISE AND RESUBMIT ✓

NOT REVIEWED

Stantec

Date: 4/10/15

By:

This review by Stantec Consulting Services Inc. is for the sole purpose of ascertaining conformance with the general design concept. This review shall not mean that Stantec Consulting Services Inc approves the detail design inherent in the shop drawings, responsibility for which shall remain with the Contractor. Submitting same, and such review shall not relieve the Contractor of his responsibility for errors or omissions in the shop drawing or of his responsibility for meeting all requirements of the Contract Documents. The contractor is responsible for dimensions to be confirmed and correlated at the job site, for information that pertains solely to the fabrication processes or to techniques of construction and installation and for coordination of the work of all subtrades.

STATE OF VERMONT
DARYL D. BURNS
No. 9031
Structural I
LICENSED
PROFESSIONAL ENGINEER

3/31/15

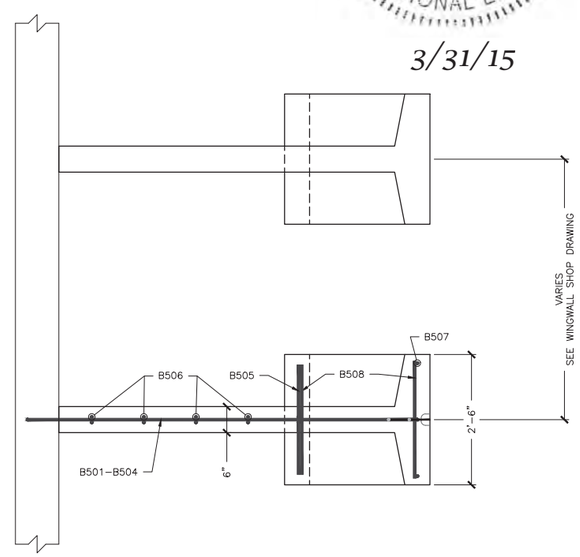

6 REQ'D

NOTE: REINFORCING SHOWN REPRESENTS "E" ANCHOR
OTHER ANCHOR REINFORCING SIMILAR

ANCHOR TYPE "B"					
CONCRETE QUANTITY				0.41 CY	
WEIGHT				1740 LB	
W1				1'-4"	
W2				3'-5⅜"	
X =	2'-2⅝"	Y=	1'-8⅜"		
BAR LIST					
MARK	QTY	SIZE	L	TYPE	LENGTH
B501	1	#5	4'-4½"	1	10'-1½"
B502	1	#5	4'-0½"	1	9'-5"
B503	1	#5	3'-8¼"	1	8'-9"
B504	1	#5	3'-0"	1	7'-4½"
B505	2	#5	3'-8½"	2	4'-7"
B506	2	#5	----	Str.	3'-3"
B507	4	#5	----	Str.	4'-4½"
B508	7	#5	----	Str.	2'-3"

ANCHOR TYPE "C"					
CONCRETE QUANTITY				0.48 CY	
WEIGHT				2010 LB	
W1				2'-4"	
W2				4'-5⅜"	
X =	2'-8¾"	Y=	1'-8½"		
BAR LIST					
MARK	QTY	SIZE	L	TYPE	LENGTH
B501	1	#5	5'-4½"	1	12'-1½"
B502	1	#5	5'-0½"	1	11'-5"
B503	1	#5	4'-8¼"	1	10'-9"
B504	1	#5	4'-0"	1	9'-4½"
B505	2	#5	3'-8½"	2	4'-7"
B506	4	#5	----	Str.	3'-3"
B507	4	#5	----	Str.	4'-4½"
B508	7	#5	----	Str.	2'-3"

ANCHOR TYPE "D"					
CONCRETE QUANTITY				0.54 CY	
WEIGHT				2285 LB	
W1				3'-4"	
W2				5'-5⅜"	
X =	3'-5⅛"	Y=	1'-8½"		
BAR LIST					
MARK	QTY	SIZE	L	TYPE	LENGTH
B501	1	#5	6'-4½"	1	14'-1½"
B502	1	#5	6'-0½"	1	13'-5"
B503	1	#5	5'-8¼"	1	12'-9"
B504	1	#5	5'-0"	1	11'-4½"
B505	2	#5	3'-8½"	2	4'-7"
B506	6	#5	----	Str.	3'-3"
B507	4	#5	----	Str.	4'-4½"
B508	7	#5	----	Str.	2'-3"

ANCHOR TYPE "E"					
CONCRETE QUANTITY				0.61 CY	
WEIGHT				2550 LB	
W1				4'-4"	
W2				6'-5⅜"	
X =	4'-0"	Y=	1'-8⅜"		
BAR LIST					
MARK	QTY	SIZE	L	TYPE	LENGTH
B501	1	#5	7'-4½"	1	16'-1½"
B502	1	#5	7'-0½"	1	15'-5"
B503	1	#5	6'-8¼"	1	14'-9"
B504	1	#5	6'-0"	1	13'-4½"
B505	2	#5	3'-8½"	2	4'-7"
B506	8	#5	----	Str.	3'-3"
B507	4	#5	----	Str.	4'-4½"
B508	7	#5	----	Str.	2'-3"

ANCHOR TYPE "F"					
CONCRETE QUANTITY				0.68 CY	
WEIGHT				2860 LB	
W1				5'-4"	
W2				7'-5⅜"	
X =	4'-7⅝"	Y=	1'-8⅝"		
BAR LIST					
MARK	QTY	SIZE	L	TYPE	LENGTH
B501	1	#5	8'-4½"	1	18'-1½"
B502	1	#5	8'-0½"	1	17'-5"
B503	1	#5	7'-8¼"	1	16'-9"
B504	1	#5	7'-0"	1	15'-4½"
B505	2	#5	3'-8½"	2	4'-7"
B506	10	#5	----	Str.	3'-3"
B507	4	#5	----	Str.	4'-4½"
B508	7	#5	----	Str.	2'-3"

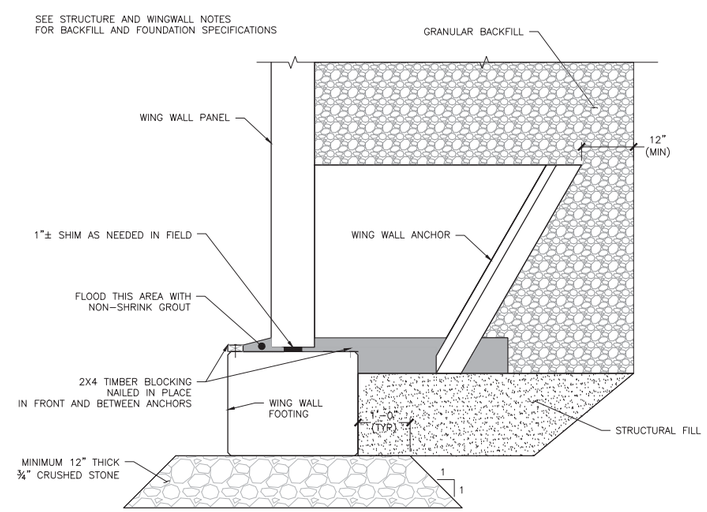

2 S5.0 FOOTING TO WW ATTACHMENT DETAIL
¾" = 1'-0"

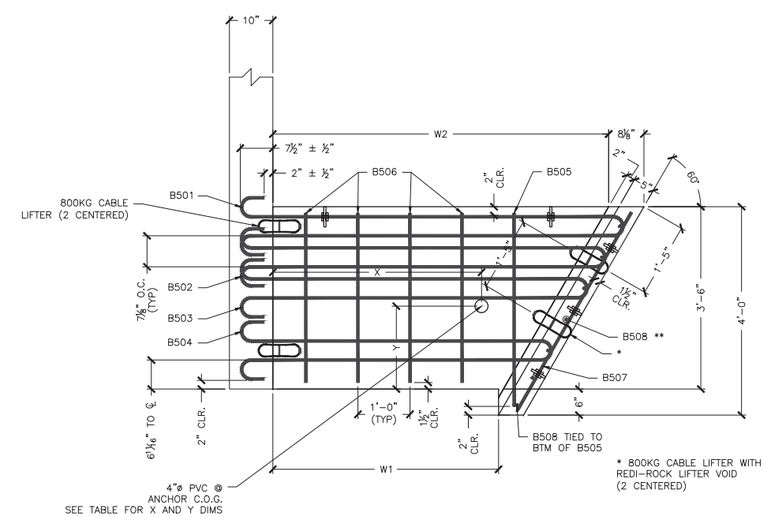

3 S5.0 ANCHOR DETAIL
¾" = 1'-0"

* 800KG CABLE LIFTER WITH REDI-ROCK LIFTER VOID (2 CENTERED)

** PLACE (1) B508 THROUGH EACH HOOP BARS, (1) CENTERED BETWEEN HOOP BARS 503 & 504, AND (2) BELOW B504 HOOP BAR W/ BOTTOM B508 2" CLEAR FROM BOTTOM (7 TOTAL)

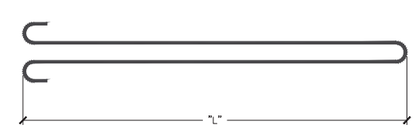

TYPE 1

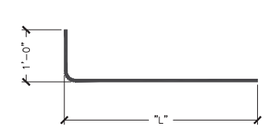

TYPE 2

No.	Date	Revision	By
1	XXXXXXXX	XX	XXX

MICHIE CORPORATION
173 BUXTON INDUSTRIAL DRIVE - PO BOX 870
HENNIKER, NH 03242
PHONE 603-428-3218
FAX 603-428-3626
WWW.MICHIECORP.COM

Bridge #52 - VT Route 30 - VAOT STP Culv(31)
Winhall, VT

12x7' Open Top Box Culvert - Anchor Details

Scale: AS SHOWN
Checked by: XXX
Drawn by: CFP
Designed by: xxx
Project No. 5778
Date: 2/24/2015

Prepared for:
Renaud Brothers, Inc.
283 Fort Bridgeman Rd #2
Vernon, VT 05354

DWG NO.
S5.0

Project Number: 2015.059.013
Page 1 of __

Please include lifting calculations with re-submittal

DESIGN COMPUTATIONS FOR

Winhall VT BR 52 12x7

PREPARED FOR:

Michie Corporation
PO Box 870
Henniker, New Hampshire 03242

PREPARED BY:

DELTA
ENGINEERS, ARCHITECTS, & LAND SURVEYORS
860 Hooper Road, Endwell, New York 13760
TEL: 607-231-6600 FAX: 607-231-6650
EMAIL: precast@deltaengineers.com
www.deltaengineers.com

STATE OF VERMONT
DARYL D. BURNS
No. 9031
Structural I
LICENSED
PROFESSIONAL ENGINEER

3/31/15

MICHIE CORPORATION

WHITE MOUNTAIN PRECAST LLC
Serving All Your Precast Bridge Needs

173 Buxton Industrial Drive • PO Box 870 • Henniker, NH 03242 • Tel: 603.428.3218 • 800.322.6949 • Fax: 603.428.7426

DESIGN CALCULATIONS
12'-0" x 7'-0" Open Top Box Culvert
With Precast Anchor Wingwalls

Prepared For:
Renaud Brothers
283 Fort Bridgeman Rd #2
Vernon, VT 05354

Project Information:
VAOT STP Culv (31)
Bridge #52 Route 30
Winhall, VT

Michie Project No: 5778

Design By: PJL
Checked By:
Date Printed: 2/23/2015

Renaud #5778
BR #52 - 12x7 BCwTS
VTrans #STP CULV(31)
Winhall, VT

CALCULATIONS FOR 12 X 7 OPEN TOP BOX CULVERT - BR #52

References

1. AASHTO LRFD Bridge Design Specifications, 5th Edition.
2. Contract Plans, "Proposed Improvement Bridge Project, Town of Winhall, VT Route 30, Bridge Numbers 47 and 52 VTRANS #STP CULV(31)" by Stantec of South Burlington VT, dated 10/9/14.

Material Information

Concrete:

$f_c := 5000 \frac{lbf}{in^2}$ $\quad Aggregate_{diam} := .75in$ $\quad w_c := 0.145$ $\quad \gamma_c := 150 \frac{lbf}{ft^3}$ $\quad K_1 := 1$

$E_c := 33000 \cdot K_1 \cdot w_c^{1.5} \cdot \sqrt{\frac{f_c}{1000psi}} \cdot ksi = 4074 \cdot ksi$ AASHTO 5.4.2.4-1

Steel:

$f_y := 60000 \frac{lbf}{in^2}$ $\quad E_s := 29000ksi$

Culvert Geometry

$S := 12ft$	Inside Span of Culvert
$H := 7ft$	Inside Rise of Culvert
$t_{leg} := 8in$	Thickness of Leg
$t_{deck} := 10in$	Thickness of Deck
$t_{btm} := 10in$	Thickness of Bottom Slab
$haunch := 9in$	Length of haunch
$cover_{out} := 2.0in$	Cover to top Mat in Deck
$notch := 0in$	Thickness of notch in btm of top slab
$cover_{insidedeck} := 1.5in + notch = 1.5 \cdot in$	Cover to inside mat in deck
$cover := 1.5in$	Cover everywhere else
$b_w := 12in$	Design Section Width

Assumptions

The structure will be analyzed for load combinations at two stages:
1. Construction Loading - After backfilling of the lower half of the structure and with live load surcharge applied to the walls. No top slab.
2. In-service condition - After installation of the top slab and backfilling to finished grade.

Weepholes will be installed in the box culvert, which will prevent hydrostatic pressure from developing behind the culvert walls.

Structure will be analyzed as a 1'-0" wide strip.The structure will be modeled as a centerline model. The soil loads will be calculated according to actual outside dimensions. The top slab will be assumed hinged at the top of the legs. The haunch will be ignored at the top slab for modeling purposes, but will be used to determine the critical section in the top slab.

The base slab is continuously supported by the foundation soil beneath it. This will be modeled by soils springs. Sping constant, in kips/in, is dependent on the spacing of the springs. Reference for calculation based on Modulus of Subgrade Reaction k = 200psi per in, "Pavement Analysis and Design" Figure 7.36, Huang, YH, 1993.

One end of the base will also be fixed wrt translation in the x and z directions and rotation about the x and y directions.

The structure will have the following locations analyzed:
1M. Outside Leg Moment (at or below the haunch) for negative moments at the knee.
2M. Inside Leg (if applicable) for positive moments in the leg.
3S. Leg for Shear
4M. Outside Bottom Deck Moment (at or inside the haunch) for negative moments at the knee.
5M. Inside Bottom Deck Moment (usually near midspan) for positive moments in the deck.
6S. Bottom Deck for Shear (at or inside the haunch).
7M. Inside Top Deck Moment (usually near midspan) for positive moments in the deck.
8S. Top Deck for Shear (at or near the inside face of the leg).

Per 12.5.2 and 12.5.3, this structure shall be investigated at Service Load Combination I and Strength Load Combinations I & II.

Due to curbwall and assumed distance from curb to wheel load, traffic cannot come within 24" of the end of the culvert, therefore an Edge Beam is not required per 12.11.2.1. The area of the deck supporting the curbwall will not have an independent check because after the curbwall is attached the design section becomes significantly deeper (including the depth of curbwall).

The contract plans show a culvert with 6ft of earth cover. AASHTO 12.11.2.1 states that for culverts with 2ft or more of fill, wheel loads shall be distributed as specified in section 3.6.1.2.6.

Live Load shall be AASHTO HL-93 load with appropriate Multiple Presence Factors (m) & Dynamic Allowance (IM). Per 3.6.1.3.3, only the design truck and design tandem portion of the HL-93 live load shall be applied. That is, the lane load portion of the HL-93 live load shall be ignored.

Soil backfill material assumptions as follows:

Design By: PJL
Checked By:
Date Printed: 2/23/2015

Renaud #5778
BR #52 - 12x7 BCwTS
VTrans #STP CULV(31)
Winhall, VT

Dry unit weight of soil = 140 pcf. Soil Friction angle = 34-degrees. Concrete unit weight: 150 pcf

Design Parameters:

$\eta_D := 1.00$

Ductility Load Modifier (AASHTO 1.3.3) Conventional. Design complying with LRFD Specifications

$\eta_R := 1.0$

$\eta_{R.earth} := 1.05$

Redundancy Load Modifiers (AASHTO 1.3.4) Conventional levels of Redundancy.
Note: per 12.5.4, Buried structures will be considered nonredundant under earth loads. Therefore, basic load cases applying earth loads will be multiplied by 1.05.

$\eta_I := 1.00$

Importance Load Modifier (AASHTO 1.3.5) typical bridge

$\eta_i := \eta_D \cdot \eta_R \cdot \eta_I = 1$

$\eta_{i.earth} := \eta_D \cdot \eta_{R.earth} \cdot \eta_I = 1.05$

Load Modifiers (AASHTO 1.3.2.1)
(it will be applied to the BLCs below)

$\phi_{moment} := 0.90$

$\phi_{shear} := 0.90$

$\phi_{axial} := 0.90$

Per AASHTO 5.5.4.2.1

β_1 = Stress Block Factor specified in Article 5.7.2.2

$$\beta_1 := \max\left[.65, \left[\begin{array}{l} .85 \quad \text{if } f_c < 4000\text{psi} \\ .85 - \frac{.05}{\text{psi}} \cdot \left(\frac{f_c - 4000\text{psi}}{1000}\right) \quad \text{otherwise} \end{array}\right]\right] \qquad \beta_1 = 0.8$$

$\gamma_w := 62.4 \frac{lb}{ft^3}$ $\qquad k_w := 1$

Site Conditions

$H_{overburden} := 6ft$

Depth of Soil over the Top of Deck

Design By: PJL
Checked By:
Date Printed: 2/23/2015

Renaud #5778
BR #52 - 12x7 BCwTS
VTrans #STP CULV(31)
Winhall, VT

Backfill

$\gamma_{soil} := 140 \frac{lb}{ft^3}$

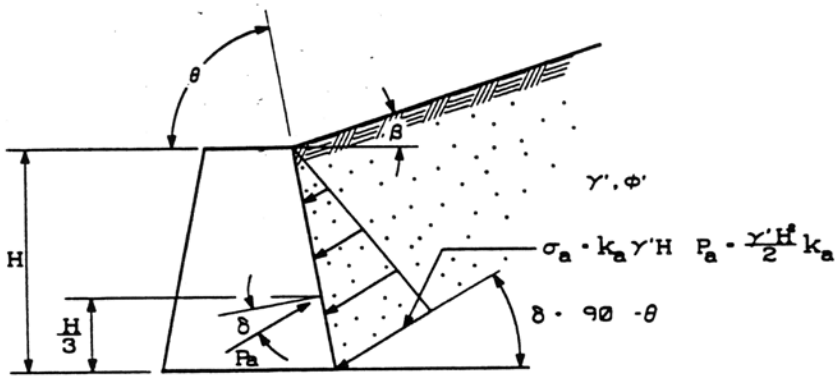

$$k_a = \frac{\sin^2(\theta - \phi')}{\sin^2\theta \, \sin(\theta - \delta)\left[1 + \sqrt{\frac{\sin(\phi' - \delta)\,\sin(\phi' - \beta)}{\sin(\theta - \delta)\,\sin(\theta - \beta)}}\right]^2}$$

γ' = EFFECTIVE UNIT WEIGHT
φ' = EFFECTIVE ANGLE OF INTERNAL FRICTION
δ = ANGLE OF WALL FRICTION (SEE TABLE 5.5.2B)
β = SLOPE ANGLE
θ = WALL FACE BATTER
ALL ANGLES ARE POSITIVE (+) AS SHOWN

FIGURE 5.5.2A Computational Procedures for Active Earth Pressures (Coulomb Analysis)

$\phi := 34deg$ $\beta := 0deg$ $\delta := \frac{2}{3} \cdot \phi$ $\delta = 22.667 \cdot deg$ $\theta := 90deg$

$k_a := 1 - \sin(\phi) = 0.441$ Conservatively use at rest earth pressure condition

Basic Load Cases for Risa-3D

BLC #1 - Dead Load of Structure (DC)
BLC #2 - Earth Pressure against Left Leg (EH)
BLC #3 - Earth Pressure against Right Leg (EH)
BLC #4 - Overburden Soil Pressure on Both Legs. This is the pressure exerted on the legs from the overburden soil when backfilling is complete to proposed finished grade. (ES)
BLC #5 - Overburden Soil Pressure on the Bridge Deck. (EV)
BLC #6 - Live Load Surcharge on the Left Leg. (LS)
BLC #7 - Live Load Surcharge on the Right Leg. (LS)

Moving Load Cases for Risa-3D

ML#1 - AASHTO Design Truck as distributed through the soil. (LL)
ML#2 - AASHTO Design Tandem as distributed through the soil. (LL)

Determine load for each BLC

BLC #2 & BLC #3:

These load cases apply earth pressure to the culvert legs from the submerged soil that is backfilled just to the top of the legs. The value of the distributed pressure at the bottom of the leg is:

$$\sigma_{legbackfill} := \eta_{i.earth} \cdot k_a \cdot \gamma_{soil} \cdot (H + t_{btm}) \qquad \sigma_{legbackfill} = 507.589 \frac{lb}{ft^2}$$

BLC #4:

This load case applies earth pressure to the frame legs from the soil that is backfilled over the the box culvert. The value of the distributed pressure along the entire leg is:

$$\sigma_{legoverburden} := \eta_{i.earth} \cdot k_a \cdot \gamma_{soil} \cdot (H_{overburden} + t_{deck}) \qquad \sigma_{legoverburden} = 442.791 \frac{lb}{ft^2}$$

BLC #5:

This load case applies earth pressure to the deck from the soil that is backfilled over the the box culvert. The value of the distributed pressure along the entire deck is:

$$\sigma_{deckoverburden} := \eta_{i.earth} \cdot \gamma_{soil} \cdot H_{overburden} \qquad \sigma_{deckoverburden} = 882 \frac{lb}{ft^2}$$

BLC #6 & BLC#7:

These load cases apply LL surcharge earth pressure to the legs. The equivalent height of soil is given by AASHTO Table 3.11.6.4-1:

$$H_{LS}(n) := \begin{cases} 4ft & \text{if } n \le 5ft \\ 4ft - \dfrac{n - 5ft}{5} & \text{if } 5ft < n \le 10ft \\ 3ft - \dfrac{n - 10ft}{10} & \text{if } 10ft < n \le 20ft \\ 2ft & \text{otherwise} \end{cases}$$

Height of Soil for Vehicular Loading on Abutments Perpendicular to Traffic. Table 3.11.6.4-1

$$H_{LS}\left(H + t_{btm} + t_{deck} + H_{overburden}\right) = 2.533\,ft$$

The value of the distributed pressure along the entire leg is:

$$\sigma_{legLL} := k_a \cdot \gamma_{soil} \cdot H_{LS}\left(H + t_{btm} + t_{deck} + H_{overburden}\right)$$

$$\sigma_{legLL} = 156.34\,\frac{lb}{ft^2}$$

MLC#1 and MLC#2

This load case is the Truck and tandem portions of the HL-93 Live Load as it is distributed through the overburden soil. Per AASHTO 12.11.2.1 the distribution of live load to the deck shall be as prescribed by 3.6.1.2.6.:

3.6.1.2.6

In lieu of a more precise analysis, or the use of other acceptable approximate methods of load distribution permitted in Section 12, where the depth of fill is 2.0 ft or greater, wheel loads may be considered to be uniformly distributed over a rectangular area with sides equal to the dimension of the tire contact area, as specified in Article 3.6.1.2.5, and increased by either 1.15 times the depth of the fill in select granular backfill, or the depth of fill in all other cases.

Where such areas from several wheels overlap, the total load shall be uniformly distributed over the area.

For single-span culverts, the effects of live load may be neglected where the depth of fill is more than 8.0 ft. and exceeds the span length.....

Check four cases. Truck with 1 lane loaded, Truck with 2 lanes loaded, Tandem with 1 lane loaded, and tandem with 2 lanes loaded. Note that for a single span structure, the maximum shear and moment will be caused by using the truck with a rear axle spacing = 14'. Therefore axle spacings greater than this need not be checked. Also due to size of this bridge the front axle will not be on the bridge when both rear axles are. Therefore front axle is ignored.

RISA does not allow for the application of moving distributed loads, only point loads. Therefore, the total distributed load is divided evenly into a series of equally spaced point loads. If the distributed loads overlap, there will be 50 equally spaced point loads (the maximum allowed in RISA). If there is a gap between the distributed loads, there will be two sets of 25 equally spaced point loads.

In the truck distributed load calculation:

If $H_{overburden} > 11.45ft$ then there is overlap of the front and rear axles.And the load will be applied as a single uniform load across the entire length of the design strip.

If $H_{overburden} \leq 11.45ft$ then there will be two uniform loads applied.
There will be a gap between these uniform loads. (see sketch)

In the tandem load distribution:

If $H_{overburden} > 2.75ft$ then there is overlap of the front and rear axles.And the load will be applied as a single uniform load with a length appropriate to the depth of soil.

If $H_{overburden} \leq 2.75ft$ then there will be two uniform loads applied.
There will be a gap between these uniform loads. (see sketch)

One Truck:

$H_{overburden} = 6\,ft$ Depth of overburden soil above deck. From above.

$m_{singletrk} := 1.2$ Multiple Presence Factor for One Truck AASHTO 3.6.1.1.2-1

$$LL_{singletrk}(n) := \begin{cases} \dfrac{16kip}{(20in + n\cdot 1.15)\cdot(10in + n\cdot 1.15)} & \text{if } 2.00ft \le n < 3.77ft \\ \dfrac{2\cdot 16kip}{(6ft + 20in + n\cdot 1.15)\cdot(10in + n\cdot 1.15)} & \text{if } 3.77ft \le n < 11.45ft \\ \dfrac{4\cdot 16kip}{(6ft + 20in + n\cdot 1.15)\cdot(14ft + 10in + n\cdot 1.15)} & \text{otherwise} \end{cases}$$

$n := 2ft, 2.2ft .. 20ft$

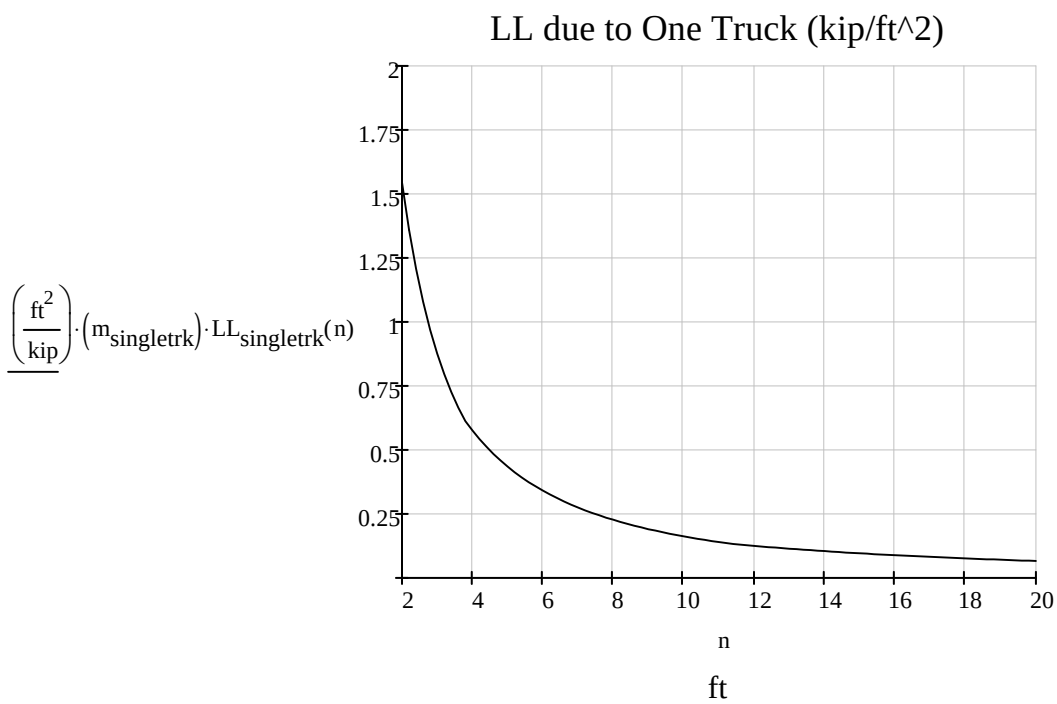

$m_{singletrk}\cdot LL_{singletrk}(H_{overburden}) = 0.341\cdot\frac{kip}{ft^2}$

Two Trucks:

$H_{overburden} = 6\,ft$ Depth of overburden soil above deck. From above.

$m_{twotrk} := 1.0$ Multiple Presence Factor for Two Trucks AASHTO 3.6.1.1.2-1

$$LL_{twotrk}(n) := \begin{cases} \dfrac{2 \cdot 16kip}{(n \cdot 1.15 + 10in + 4ft + 10in) \cdot (10in + n \cdot 1.15)} & \text{if } 2.00ft \le n < 3.77ft \\ \dfrac{4 \cdot 16kip}{(n \cdot 1.15 + 10in + 6ft + 4ft + 6ft + 10in) \cdot (10in + n \cdot 1.15)} & \text{if } 3.77ft \le n < 11.45ft \\ \dfrac{8 \cdot 16kip}{(n \cdot 1.15 + 10in + 6ft + 4ft + 6ft + 10in) \cdot (n \cdot 1.15 + 5in + 14ft + 5in)} & \text{otherwise} \end{cases}$$

$n := 2ft, 2.2ft .. 20ft$

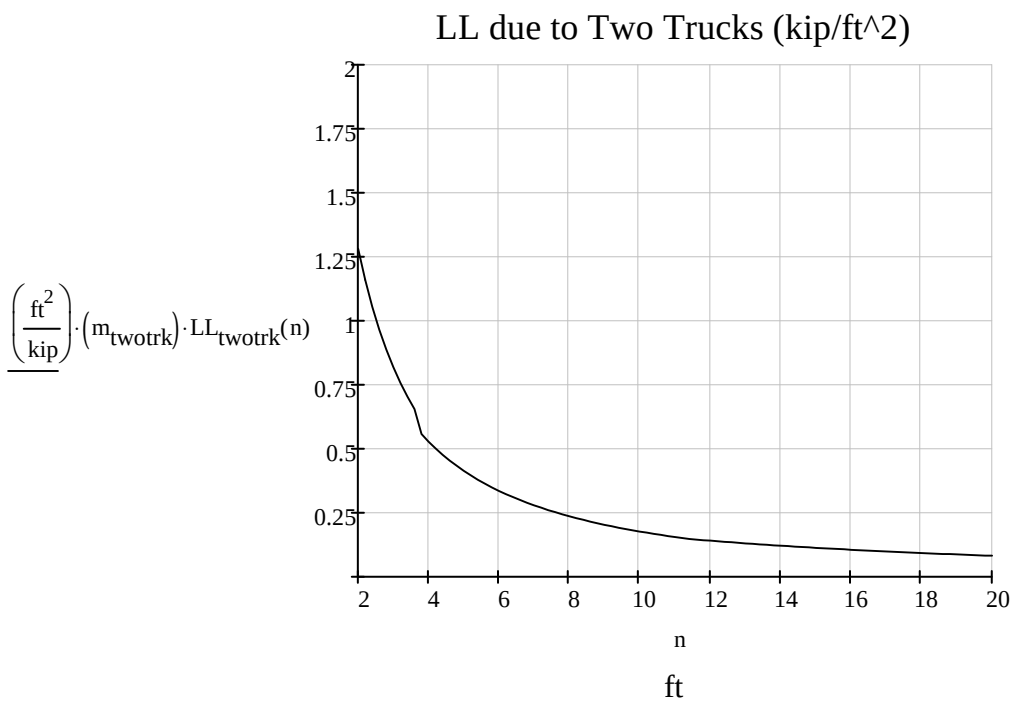

$$m_{twotrk} \cdot LL_{twotrk}(H_{overburden}) = 0.337 \cdot \frac{kip}{ft^2}$$

$$LL_{trk} := \max\left(m_{singletrk} \cdot LL_{singletrk}(H_{overburden}), m_{twotrk} \cdot LL_{twotrk}(H_{overburden})\right) = 0.341 \cdot ksf$$

Length of Distributed Truck Load:

$$LoadLength_{trk} := \begin{cases} H_{overburden} \cdot 1.15 + 10in & \text{if } H_{overburden} < 11.45ft \\ H_{overburden} \cdot 1.15 + 10in + 14ft & \text{otherwise} \end{cases} = 7.733\,ft$$

Length of Gap between Distributed Truck Loads:

$$Gap_{trk} := \begin{cases} 14ft - 10in - H_{overburden} \cdot 1.15 & \text{if } H_{overburden} < 11.45ft \\ 0ft & \text{otherwise} \end{cases} = 75.2 \cdot in$$

Value of each Point Load:

$$PointLoad_{trk} := b_w \cdot \begin{cases} LL_{trk} \cdot LoadLength_{trk} \cdot \frac{1}{50} & \text{if } Gap_{trk} = 0ft \\ LL_{trk} \cdot LoadLength_{trk} \cdot \frac{1}{25} & \text{otherwise} \end{cases} = 105.446 \cdot lbf$$

Spacing between each Point Load:

$$PointLoadSpacing_{trk} := \begin{cases} \frac{1}{50 - 1} \cdot LoadLength_{trk} & \text{if } Gap_{trk} = 0ft \\ \frac{1}{25 - 1} \cdot LoadLength_{trk} & \text{otherwise} \end{cases} = 3.867 \cdot in$$

Design By: PJL
Checked By:
Date Printed: 2/23/2015

Renaud #5778
BR #52 - 12x7 BCwTS
VTrans #STP CULV(31)
Winhall, VT

One Tandem:

$H_{overburden} = 6\,ft$ Depth of overburden soil above deck. From above.

$m_{singletndm} := 1.2$ Multiple Presence Factor for One Truck AASHTO 3.6.1.1.2-1

$$LL_{singletndm}(n) := \begin{cases} \dfrac{12.5kip}{(20in + n\cdot 1.15)\cdot(10in + n\cdot 1.15)} & \text{if } 2.00ft \le n < 2.75ft \\ \dfrac{2\cdot 12.5kip}{(20in + n\cdot 1.15)\cdot(4ft + 10in + n\cdot 1.15)} & \text{if } 2.75ft \le n < 3.77ft \\ \dfrac{4\cdot 12.5kip}{(6ft + 20in + n\cdot 1.15)\cdot(4ft + 10in + n\cdot 1.15)} & \text{otherwise} \end{cases}$$

$n := 2ft, 2.2ft .. 20ft$

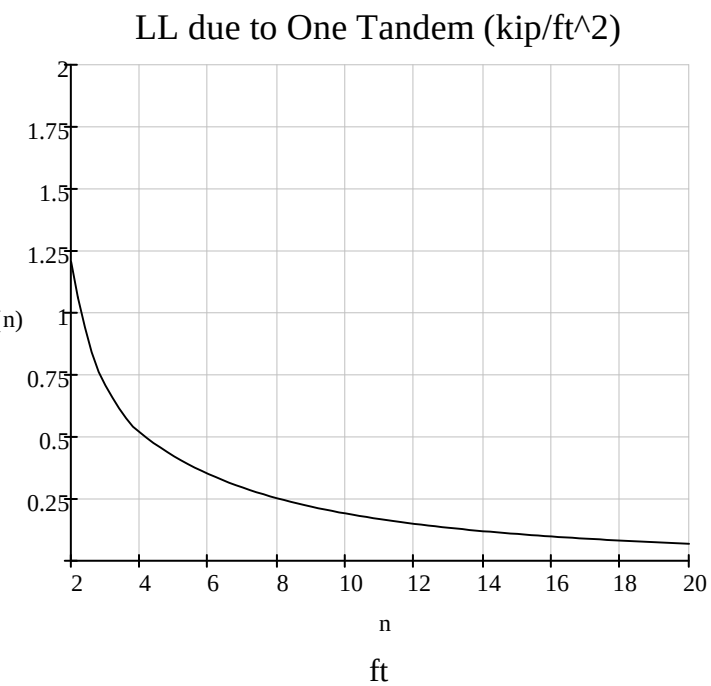

$$m_{singletndm}\cdot LL_{singletndm}\left(H_{overburden}\right) = 0.351\cdot\frac{kip}{ft^2}$$

Two Tandems:

$H_{overburden} = 6\,ft$ Depth of overburden soil above deck. From above.

$m_{twotndm} := 1.0$ Multiple Presence Factor for Two Trucks AASHTO 3.6.1.1.2-1

$$LL_{twotndm}(n) := \begin{cases} \dfrac{2 \cdot 12.5kip}{(n \cdot 1.15 + 10in + 4ft + 10in) \cdot (10in + n \cdot 1.15)} & \text{if } 2.00ft \le n < 2.75ft \\ \dfrac{4 \cdot 12.5kip}{(n \cdot 1.15 + 10in + 4ft + 10in) \cdot (4ft + 10in + n \cdot 1.15)} & \text{if } 2.75ft \le n < 3.77ft \\ \dfrac{8 \cdot 12.5kip}{(n \cdot 1.15 + 10in + 6ft + 4ft + 6ft + 10in) \cdot (4ft + 10in + n \cdot 1.15)} & \text{otherwise} \end{cases}$$

$n := 2ft, 2.2ft .. 20ft$

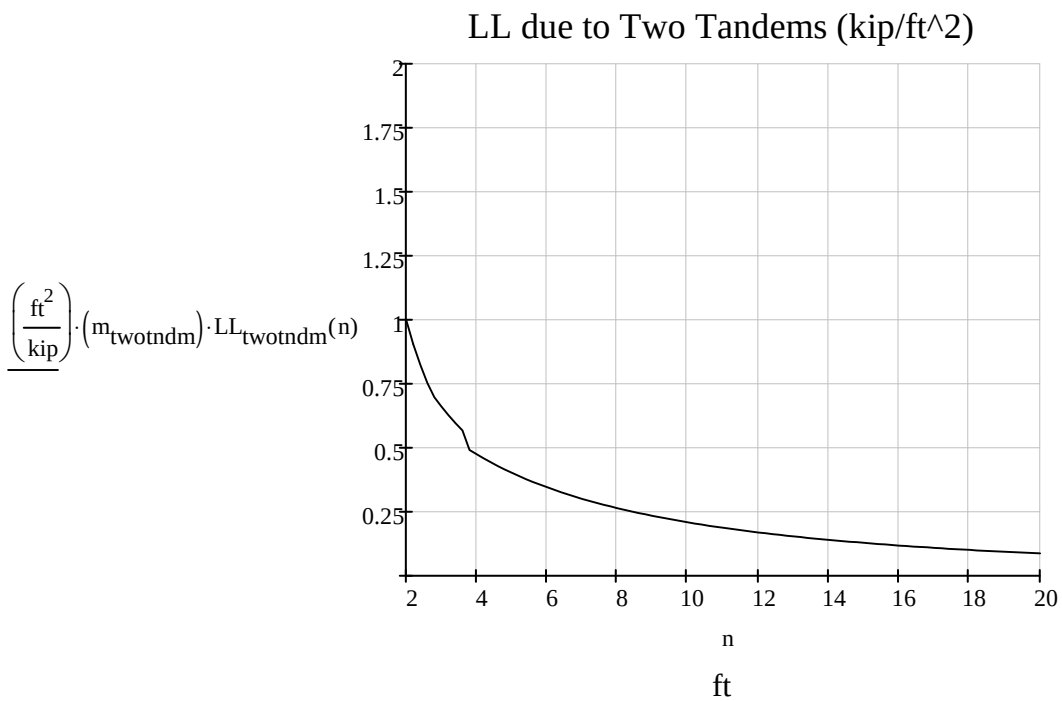

$$m_{twotndm} \cdot LL_{twotndm}(H_{overburden}) = 0.347 \cdot \frac{kip}{ft^2}$$

$$LL_{tndm} := \max(m_{singletndm} \cdot LL_{singletndm}(H_{overburden}), m_{twotndm} \cdot LL_{twotndm}(H_{overburden}))$$

$$LL_{tndm} = 0.351 \cdot \frac{kip}{ft^2}$$

Length of Distributed Tandem Load:

$$LoadLength_{tndm} := \begin{cases} H_{overburden} \cdot 1.15 + 10in & \text{if } H_{overburden} < 2.75ft \\ H_{overburden} \cdot 1.15 + 10in + 4ft & \text{otherwise} \end{cases} = 11.733\,ft$$

Length of Gap between Distributed Tandem Loads:

$$Gap_{tndm} := \begin{cases} 4ft - 10in - H_{overburden} \cdot 1.15 & \text{if } H_{overburden} < 2.75ft \\ 0ft & \text{otherwise} \end{cases} = 0 \cdot in$$

Value of each Point Load:

$$PointLoad_{tndm} := b_w \cdot \begin{cases} LL_{tndm} \cdot LoadLength_{tndm} \cdot \frac{1}{50} & \text{if } Gap_{tndm} = 0ft \\ LL_{tndm} \cdot LoadLength_{tndm} \cdot \frac{1}{25} & \text{otherwise} \end{cases} = 0.082 \cdot kip$$

Spacing between each Point Load:

$$PointLoadSpacing_{tndm} := \begin{cases} \frac{1}{50-1} \cdot LoadLength_{tndm} & \text{if } Gap_{tndm} = 0ft \\ \frac{1}{25-1} \cdot LoadLength_{tndm} & \text{otherwise} \end{cases} = 2.873 \cdot in$$

The values calculated above are the unfactored service loads adjusted for the multiple presence factor. These loads still need to be adjusted in RISA to include the Live Load Factor and the Dynamic Load Allowance (IM). No distribution is required since the load is being applied as a distributed load to a one foot wide strip. Since we have not included the Load Modifier to the Live Load yet, we will include it in the LLF

This load factor will be as follows:

$LLF = \eta_i \cdot IM \cdot \beta_{LL}$ where,

β_{LL} = The Live Load Factor from Table 3.4.1-1 for each Limit State

IM = The Dynamic Load Allowance as determined in 3.6.2.2

η_i = Load Modifier

$\beta_{LLstrengthI} := 1.75$ $\beta_{LLstrengthII} := 1.35$ $\beta_{LLserviceI} := 1.00$

$$IM := 1 + \max\left[.33\cdot\left(1 - \frac{0.125}{ft}\cdot H_{overburden}\right), 0\right] \qquad IM = 1.083$$

$$LLF_{strengthI} := \eta_i \cdot IM \cdot \beta_{LLstrengthI} \qquad \boxed{LLF_{strengthI} = 1.894}$$

$$LLF_{strengthII} := \eta_i \cdot IM \cdot \beta_{LLstrengthII} \qquad \boxed{LLF_{strengthII} = 1.461}$$

$$LLF_{serviceI} := \eta_i \cdot IM \cdot \beta_{LLserviceI} \qquad \boxed{LLF_{serviceI} = 1.083}$$

Load Combinations for Risa-3D

Strength I Load Factors (AASHTO Table 3.4.1-1 and 3.4.1-2)

LC#1 = 1.25(BLC#1)
LC#2 = 1.25(BLC#1) + 1.5(BLC#2)
To check structure for backfill behind one leg only.
LC#3 = 1.25(BLC#1) + 1.5(BLC#2 + BLC#3) + 1.75(BLC#6 + BLC#7))
To check structure when it is backfilled to top of legs and a construction live load is present for placing stone fill in the culvert. Use maximum load factors for EH and LS to increase the effect on negative moments in the knees.
LC#4 = 1.25(BLC#1) + 0.9(BLC#2+BLC#3) + 0.75(BLC#4) + 1.3(BLC#5)
To check structure when it is backfilled to final grade. Minimum load factors on horizontal loads to maximize positive moment in the deck.
LC#5 = 1.25(BLC#1) + 1.5(BLC#2 + BLC#3) + 1.5(BLC#4) + 1.3(BLC#5)
To check structure when it is backfilled to final grade. Maximum load factors on horizontal loads to increase the negative moments in the knees.
LC#6 = 1.25(BLC#1) + 1.5(BLC#2 + BLC#3) + 1.5(BLC#4) + 1.3(BLC#5) + 1.75(BLC#6)
Applying LL surcharge behind the left leg only. Maximum load factors on horizontal loads to increase the negative moment in the knees.
LC#7 = 1.25(BLC#1) + 1.5(BLC#2 + BLC#3) + 1.5(BLC#4) + 1.3(BLC#5) + 1.75(BLC#6+BLC#7)
Applying LL surcharge behind both legs. Maximum load factors on horizontal loads to increase the negative moment in the knees.
LC#8 = 1.25(BLC#1) + 0.9(BLC#2 + BLC#3) + 0.75(BLC#4) + 1.3(BLC#5) + LLF*ML#1
Applying LL to deck only. Minimum load factors on horizontal loads to maximize positive moment in the deck.
LC#9 = 1.25(BLC#1) + 0.9(BLC#2 + BLC#3) + 0.75(BLC#4) + 1.3(BLC#5) + LLF*ML#2
Applying LL to deck only. Minimum load factors on horizontal loads to maximize positive moment in the deck.
LC#10 = 1.25(BLC#1) + 1.5(BLC#2 + BLC#3) + 1.5(BLC#4) + 1.3(BLC#5) + 1.75(BLC#6) + LLF*ML#1
Applying LL surcharge behind the left leg and deck. Maximum load factors on horizontal loads to increase the negative moment in the knees.
LC#11 = 1.25(BLC#1) + 1.5(BLC#2 + BLC#3) + 1.5(BLC#4) + 1.3(BLC#5) + 1.75(BLC#6) + LLF*ML#2
Applying LL surcharge behind the left leg and deck. Maximum load factors on horizontal loads to increase the negative moment in the knees.
LC#12 = 1.25(BLC#1) + 1.5(BLC#2 + BLC#3) + 1.5(BLC#4) + 1.3(BLC#5) + 1.75(BLC#6 + BLC#7) + LLF*ML#1
Applying LL surcharge behind both legs and deck. Maximum load factors on horizontal loads to increase the negative moment in the knees.
LC#13 = 1.25(BLC#1) + 1.5(BLC#2 + BLC#3) + 1.5(BLC#4) + 1.3(BLC#5) + 1.75(BLC#6 + BLC#7) + LLF*ML#2
Applying LL surcharge behind both legs and deck. Maximum load factors on horizontal loads to increase the negative moment in the knees.

Note: LC #9, #11, & #13 are the same as their respective preceeding LC, except with ML#2.

Strength II Load Factors (AASHTO Table 3.4.1-1 and 3.4.1-2)

Note: Only the LS and LL load factors have changed from Strength I to Strength II.

LC#15 = 1.25(BLC#1) + 1.5(BLC#2 + BLC#3) + 1.5(BLC#4) + 1.3(BLC#5) + 1.35(BLC#6)
Applying LL surcharge behind the left leg only. Maximum load factors on horizontal loads to increase the negative moment in the knees.

LC#16 = 1.25(BLC#1) + 1.5(BLC#2 + BLC#3) + 1.5(BLC#4) + 1.3(BLC#5) + 1.35(BLC#6+BLC#7)
Applying LL surcharge behind both legs. Maximum load factors on horizontal loads to increase the negative moment in the knees.

LC#17 = 1.25(BLC#1) + 0.9(BLC#2 + BLC#3) + 0.75(BLC#4) + 1.3(BLC#5) + LLF*ML#1
Applying LL to deck only. Minimum load factors on horizontal loads to maximize positive moment in the deck.

LC#18 = 1.25(BLC#1) + 0.9(BLC#2 + BLC#3) + 0.75(BLC#4) + 1.3(BLC#5) + LLF*ML#2
Applying LL to deck only. Minimum load factors on horizontal loads to maximize positive moment in the deck.

LC#19 = 1.25(BLC#1) + 1.5(BLC#2 + BLC#3) + 1.5(BLC#4) + 1.3(BLC#5) + 1.35(BLC#6) + LLF*ML#1
Applying LL surcharge behind the left leg and deck. Maximum load factors on horizontal loads to increase the negative moment in the knees.

LC#20 = 1.25(BLC#1) + 1.5(BLC#2 + BLC#3) + 1.5(BLC#4) + 1.3(BLC#5) + 1.35(BLC#6) + LLF*ML#2
Applying LL surcharge behind the left leg and deck. Maximum load factors on horizontal loads to increase the negative moment in the knees.

LC#21 = 1.25(BLC#1) + 1.5(BLC#2 + BLC#3) + 1.5(BLC#4) + 1.3(BLC#5) + 1.35(BLC#6 + BLC#7) + LLF*ML#1
Applying LL surcharge behind both legs and deck. Maximum load factors on horizontal loads to increase the negative moment in the knees.

LC#22 = 1.25(BLC#1) + 1.5(BLC#2 + BLC#3) + 1.5(BLC#4) + 1.3(BLC#5) + 1.35(BLC#6 + BLC#7) + LLF*ML#2
Applying LL surcharge behind both legs and deck. Maximum load factors on horizontal loads to increase the negative moment in the knees.

Note: LC #18, #20, & #22 are the same as their respective preceeding LC, except with ML#2.

Service I Load Factors (AASHTO Table 3.4.1-1 and 3.4.1-2)

Note: A separate model is run for the service load cases

LC#1 = 1.00(BLC#1)
LC#2 = 1.00(BLC#1) + 1.00(BLC#2)
To check structure for backfill behind one leg only.
LC#3 = 1.00(BLC#1) + 1.00(BLC#2 + BLC#3) + 1.00(BLC#6 + BLC#7))
To check structure when it is backfilled to top of legs and a construction live load is present for placing stone fill in the culvert. Use maximum load factors for EH and LS to increase the effect on negative moments in the knees.
LC#4 = 1.00(BLC#1) + 1.00(BLC#2+BLC#3) + 1.00(BLC#4) + 1.00(BLC#5)
To check structure when it is backfilled to final grade. Minimum load factors on horizontal loads to maximize positive moment in the deck.
LC#5 = 1.00(BLC#1) + 1.00(BLC#2 + BLC#3) + 1.00(BLC#4) + 1.00(BLC#5)
To check structure when it is backfilled to final grade. Maximum load factors on horizontal loads to increase the negative moments in the knees.
LC#6 = 1.00(BLC#1) + 1.00(BLC#2 + BLC#3) + 1.00(BLC#4) + 1.00(BLC#5) + 1.00(BLC#6)
Applying LL surcharge behind the left leg only. Maximum load factors on horizontal loads to increase the negative moment in the knees.
LC#7 = 1.00(BLC#1) + 1.00(BLC#2 + BLC#3) + 1.00(BLC#4) + 1.00(BLC#5) + 1.00(BLC#6+BLC#7)
Applying LL surcharge behind both legs. Maximum load factors on horizontal loads to increase the negative moment in the knees.
LC#8 = 1.00(BLC#1) + 1.00(BLC#2 + BLC#3) + 1.00(BLC#4) + 1.00(BLC#5) + LLF*ML#1
Applying LL to deck only. Minimum load factors on horizontal loads to maximize positive moment in the deck.
LC#9 = 1.00(BLC#1) + 1.00(BLC#2 + BLC#3) + 1.00(BLC#4) + 1.00(BLC#5) + LLF*ML#2
Applying LL to deck only. Minimum load factors on horizontal loads to maximize positive moment in the deck.
LC#10 = 1.00(BLC#1) + 1.00(BLC#2 + BLC#3) + 1.00(BLC#4) + 1.00(BLC#5) + 1.00(BLC#6) + LLF*ML#1
Applying LL surcharge behind the left leg and deck. Maximum load factors on horizontal loads to increase the negative moment in the knees.
LC#11 = 1.00(BLC#1) + 1.00(BLC#2 + BLC#3) + 1.00(BLC#4) + 1.00(BLC#5) + 1.00(BLC#6) + LLF*ML#2
Applying LL surcharge behind the left leg and deck. Maximum load factors on horizontal loads to increase the negative moment in the knees.
LC#12 = 1.00(BLC#1) + 1.00(BLC#2 + BLC#3) + 1.00(BLC#4) + 1.00(BLC#5) + 1.00(BLC#6 + BLC#7) + LLF*ML#1
Applying LL surcharge behind both legs and deck. Maximum load factors on horizontal loads to increase the negative moment in the knees.
LC#13 = 1.00(BLC#1) + 1.00(BLC#2 + BLC#3) + 1.00(BLC#4) + 1.00(BLC#5) + 1.00(BLC#6 + BLC#7) + LLF*ML#2
Applying LL surcharge behind both legs and deck. Maximum load factors on horizontal loads to increase the negative moment in the knees.

Note: LC #9, #11, & #13 are the same as their respective preceeding LC, except with ML#2.

Design By: PJL
Checked By:
Date Printed: 2/23/2015

Renaud #5778
BR #52 - 12x7 BCwTS
VTrans #STP CULV(31)
Winhall, VT

Determine Number of RISA Design Sections

Need to choose number of sections such that RISA reports forces close to critical locations in the structure.

Number of Design Sections in RISA. $n_{sections} := 13$

Length of Leg in Model

$$H + \frac{1}{2}\cdot\left(t_{deck} + t_{btm}\right) = 94\cdot in$$

Closest Design Section in Leg

$sec_{leg} := 11$

Each Leg Section is:

$$\frac{H + \frac{1}{2}\cdot\left(t_{deck} + t_{btm}\right)}{n_{sections} - 1} = 7.833\cdot in$$

Location of Leg Design Section:

$$\frac{H + t_{deck}}{n_{sections} - 1}\cdot\left(sec_{leg} - 1\right) = 78.333\cdot in$$

Critical Section of Leg is at:

$$H + \frac{1}{2}\cdot t_{deck} - haunch = 80\cdot in$$

Length of Deck in Model

$$S + t_{leg} = 152\cdot in$$

Closest Design Section in Deck

$sec_{deck} := 2$

Each Deck Section is:

$$\frac{S + t_{leg}}{n_{sections} - 1} = 12.667\cdot in$$

Location of Deck Design Section:

$$\frac{S + t_{leg}}{n_{sections} - 1}\cdot\left(sec_{deck} - 1\right) = 12.667\cdot in$$

Critical Section of Deck is at:

$$\frac{1}{2}\cdot t_{leg} + haunch = 13\cdot in$$

Length of Btm in Model

$$S + t_{leg} = 152\cdot in$$

Closest Design Section in Btm

$sec_{btm} := 2$

Each Btm Section is:

$$\frac{S + t_{leg}}{n_{sections} - 1} = 12.667\cdot in$$

Location of Btm Design Section:

$$\frac{S + t_{leg}}{n_{sections} - 1}\cdot\left(sec_{btm} - 1\right) = 12.667\cdot in$$

Critical Section of Btm is at:

$$\frac{1}{2}\cdot t_{leg} + haunch = 13\cdot in$$

Calculate Sping Constant and Spring Spacing

$k_m := 0.200 \frac{ksi}{in}$

Modulus of Subgrade Reaction per Figure 7.36 Pavement Analysis and Design, Huang 1993 Based on Assumed bearing value of 3000psf = 20psi

$n_{spring} := 13$

Number of Soil Springs

$s_{spring} := \frac{S + t_{leg}}{n_{spring} - 1} = 1.056\,ft$

Soil Spring Spacing

$k_{spring} := k_m \cdot s_{spring} \cdot b_w = 30.4 \cdot \frac{kip}{in}$

Spring Constant

Check Outside Leg Moment (Design Section 1M):

Service Limit State

Check Crack Control in Section 5.7.3.4

$Ms_{outsideleg} := 6.33kip \cdot ft$

Load Case #3

$Ns_{outsideleg} := -0.631kip$

Min value at same section as Ms

Bar Layout: $bar_{outsideleg} := 6$ $s_{outsideleg} := 9in$

$diam_{outsideleg} := \frac{bar_{outsideleg}}{8} in$ $diam_{outsideleg} = 0.75 \cdot in$

$As_{outsideleg} := \frac{\pi \cdot diam_{outsideleg}^2}{4} \cdot 12 \frac{in}{s_{outsideleg}}$ $As_{outsideleg} = 0.59 \cdot in^2$

$d_{outsideleg} := t_{leg} - cover_{out} - \frac{diam_{outsideleg}}{2}$ $d_{outsideleg} = 5.625 \cdot in$

Stress in reinforcement calculated per MacGregor
"Reinforced Concrete Mechanics and Design" 4th Ed, Section 9-2

$\eta := \frac{E_s}{E_c} = 7.118$

$\rho_{outsideleg} := \frac{As_{outsideleg}}{b_w \cdot d_{outsideleg}} = 0.009$

$$k := \sqrt{2\rho_{outsideleg} + \left(\rho_{outsideleg} \cdot \eta\right)^2} - \rho_{outsideleg} \cdot \eta$$

$$j_{outsideleg} := 1 - \frac{k}{3} = 0.972$$

$$fss_{outsideleg} := \frac{Ms_{outsideleg} + Ns_{outsideleg} \cdot \left(d_{outsideleg} - \frac{t_{leg}}{2}\right)}{As_{outsideleg} \cdot j_{outsideleg} \cdot d_{outsideleg}} = 23.266 \cdot ksi$$

Stress in Reinforcement at Service Limit State

$$d_{c_outsideleg} := t_{leg} - d_{outsideleg}$$ $$d_{c_outsideleg} = 2.375 \cdot in$$

$$\beta_s := 1 + \frac{d_{c_outsideleg}}{0.7 \cdot \left(t_{leg} - d_{c_outsideleg}\right)}$$ $$\beta_s = 1.603$$

$$\gamma_e := 1.00$$ exposure factor

$$s_{max1} := \frac{700 \frac{kip}{in} \cdot \gamma_e}{\beta_s \cdot fss_{outsideleg}} - 2 \cdot d_{c_outsideleg}$$ $$\boxed{s_{max1} = 14.017 \cdot in}$$

Check Minimum Bar Spacing in Section 5.10.3.1.2:

$$s_{min} := \max\left(diam_{outsideleg}, 1.33 Aggregate_{diam}, 1in\right)$$ $$\boxed{s_{min} = 1 \cdot in}$$

Check Maximum Bar Spacing in Section 5.10.3.2:

$$s_{max2} := \min\left(1.5 \cdot t_{leg}, 18in\right)$$ $$\boxed{s_{max2} = 12 \cdot in}$$

$$\boxed{s_{outsideleg} = 9 \cdot in}$$

$$CheckSpacing_{Outsideleg} := \begin{cases} \text{"OK"} & \text{if } s_{min} \le s_{outsideleg} \le \min\left(s_{max1}, s_{max2}\right) \\ \text{"NG"} & \text{otherwise} \end{cases} = \text{"OK"}$$

Check Deflection Control (AASHTO 2.5.2.6.2):

Not Applicable to Legs

Strength Limit State

Flexural Resistance in Section 5.7.3.2

$Mu_{outsideleg} := 10.326 kip \cdot ft$ Load Case #3

$Nu_{outsideleg} := -0.789 kip$ Min value at the same section & LC as $Mu_{outsideleg}$
+ if tensile, - if compressive

$Vu_{outsideleg} := 3.855 kip$ Max value at the same section & LC as $Mu_{outsideleg}$

Verify that f_y can be substituted for f_s in the equations of 5.7.3.2. This is allowed when $\frac{c}{d_s} \le 0.60$.

$c := \frac{As_{outsideleg} \cdot f_y}{0.85 \cdot f_c \cdot \beta_1 \cdot b_w}$ $c = 0.866 \cdot in$ Simplified equation 5.7.3.1.2-4

$\frac{c}{d_{outsideleg}} = 0.154$ **This is less than 0.60 therefore f_y can be substituted for f_s**

$a_{outsideleg} := \beta_1 \cdot c$ $a_{outsideleg} = 0.693 \cdot in$

$Mn_{outsideleg} := As_{outsideleg} \cdot f_y \cdot \left(d_{outsideleg} - \frac{a_{outsideleg}}{2} \right)$

$Mr_{outsideleg} := \phi_{moment} \cdot Mn_{outsideleg}$

$Mr_{outsideleg} = 13.992 \cdot kip \cdot ft$

$Mu_{outsideleg} = 10.326 \cdot kip \cdot ft$

$$CheckMoment_{OutsideLeg} := \begin{cases} \text{"OK"} & \text{if } Mu_{outsideleg} < Mr_{outsideleg} \\ \text{"NG"} & \text{otherwise} \end{cases} = \text{"OK"}$$

Minimum Reinforcement in Section 5.7.3.3.2

$f_r := 0.24 \cdot \sqrt{f_c \cdot ksi}$ $\quad f_r = 0.537 \cdot ksi$ 5.4.2.6

$I_{g_leg} := \frac{b_w \cdot t_{leg}^3}{12}$ $\quad I_{g_leg} = 512 \cdot in^4$

$y_{t_leg} := \frac{t_{leg}}{2}$ $\quad y_{t_leg} = 4 \cdot in$

$S_{c_leg} := \frac{I_{g_leg}}{y_{t_leg}} = 128 \cdot in^3$

$\gamma_1 := 1.2$ For precast members

$\gamma_3 := 0.67$ 0.67 for deformed bar

$M_{cr_leg} := \gamma_3 \cdot \gamma_1 \cdot f_r \cdot S_{c_leg}$ $\quad \boxed{M_{cr_leg} = 4.602 \cdot kip \cdot ft}$ 5.7.3.3.2

$\boxed{1.33 \cdot Mu_{outsideleg} = 13.734 \cdot kip \cdot ft}$

The factored resistance shall be at least equal to the lesser of the above two values.

$$CheckMinRein_{Outsideleg1} := \begin{cases} \text{"OK"} & \text{if } Mr_{outsideleg} \geq \min(M_{cr_leg}, 1.33 \cdot Mu_{outsideleg}) \\ \text{"NG"} & \text{otherwise} \end{cases} = \text{"OK"}$$

Minimum Reinforcement in Section 12.11.4.3.2

$\rho_{outsideleg} := \frac{As_{outsideleg}}{t_{leg} \cdot b_w}$ $\quad \boxed{\rho_{outsideleg} = 0.006}$

$\boxed{\rho_{min} := .002}$

$$CheckMinReinf_{Outsideleg2} := \begin{cases} \text{"OK"} & \text{if } \rho_{outsideleg} \geq \rho_{min} \\ \text{"NG"} & \text{otherwise} \end{cases} = \text{"OK"}$$

Check Inside Frame Leg Moment (Design Section 2M):

Service Limit State

Check Crack Control in Section 5.7.3.4

$Ms_{insideleg} := 2.856kip \cdot ft$

Load Case #7

$Ns_{insideleg} := -6.604kip$

Min value at same section as Ms

Rebar Layout

$bar_{insideleg} := 4$

$s_{insideleg} := 12in$

$diam_{insideleg} := \frac{bar_{insideleg}}{8} in$

$diam_{insideleg} = 0.5 \cdot in$

$As_{insideleg} := \frac{\pi \cdot diam_{insideleg}^2}{4} \cdot 12 \frac{in}{s_{insideleg}}$

$As_{insideleg} = 0.2 \cdot in^2$

$d_{insideleg} := t_{leg} - cover - \frac{diam_{insideleg}}{2}$

$d_{insideleg} = 6.25 \cdot in$

Stress in reinforcement calculated per MacGregor
"Reinforced Concrete Mechanics and Design" 4th Ed, Section 9-2

$\eta := \frac{E_s}{E_c} = 7.118$

$\rho_{insideleg} := \frac{As_{insideleg}}{b_w \cdot d_{insideleg}} = 0.003$

$k := \sqrt{2\rho_{insideleg} + (\rho_{insideleg} \cdot \eta)^2} - \rho_{insideleg} \cdot \eta$

$j_{insideleg} := 1 - \frac{k}{3} = 0.981$

$fss_{insideleg} := \frac{Ms_{insideleg} + Ns_{insideleg} \cdot \left(d_{insideleg} - \frac{t_{leg}}{2}\right)}{As_{insideleg} \cdot j_{insideleg} \cdot d_{insideleg}} = 16.121 \cdot ksi$

Stress in Reinforcement at Service Limit State

$d_{c_insideleg} := t_{leg} - d_{insideleg}$

$d_{c_insideleg} = 1.75 \cdot in$

$\beta_s := 1 + \frac{d_{c_insideleg}}{0.7 \cdot (t_{leg} - d_{c_insideleg})}$

$\beta_s = 1.4$

$\gamma_e := 1.00$ exposure factor

$$s_{max1} := \frac{700\frac{kip}{in}\cdot\gamma_e}{\beta_s\cdot fss_{insideleg}} - 2\cdot d_{c_insideleg}$$ $s_{max1} = 27.516\cdot in$

Check Minimum Bar Spacing in Section 5.10.3.1.2:

$s_{min} := \max(diam_{insideleg}, 1.33Aggregate_{diam}, 1in)$ $s_{min} = 1\cdot in$

Check Maximum Bar Spacing in Section 5.10.3.2:

$s_{max2} := \min(1.5\cdot t_{leg}, 18in)$ $s_{max2} = 12\cdot in$

$s_{insideleg} = 12\cdot in$

$$CheckSpacing_{insideleg} := \begin{cases} \text{"OK"} & \text{if } s_{min} \le s_{insideleg} \le \min(s_{max1}, s_{max2}) \\ \text{"NG"} & \text{otherwise} \end{cases} = \text{"OK"}$$

Check Deflection Control (AASHTO 2.5.2.6.2):

Not Applicable to Legs

Strength Limit State

Flexural Resistance in Section 5.7.3.2

$Mu_{insideleg} := 4.886kip\cdot ft$ Load Case #7

$Nu_{insideleg} := -8.613kip$ Min value at the same section & LC as $Mu_{insideleg}$
+ if tensile, - if compressive

$Vu_{insideleg} := 0.378kip$ Max value at the same section & LC as $Mu_{insideleg}$

Verify that f_y can be substituted for f_s in the equations of 5.7.3.2. This is allowed when

$$\frac{c}{d_s} \le 0.60 .$$

$c := \frac{As_{insideleg} \cdot f_y}{0.85 \cdot f_c \cdot \beta_1 \cdot b_w}$ $\quad c = 0.289 \cdot in$ Simplified equation 5.7.3.1.2-4

$\frac{c}{d_{insideleg}} = 0.046$ **This is less than 0.60 therefore f_y can be substituted for f_s**

$a_{insideleg} := \beta_1 \cdot c$ $\quad a_{insideleg} = 0.231 \cdot in$

$$Mn_{insideleg} := As_{insideleg} \cdot f_y \cdot \left(d_{insideleg} - \frac{a_{insideleg}}{2} \right)$$

$Mr_{insideleg} := \phi_{moment} \cdot Mn_{insideleg}$

$\boxed{Mr_{insideleg} = 5.42 \cdot kip \cdot ft}$

$Mu_{insideleg} = 4.886 \cdot kip \cdot ft$

$$CheckMoment_{InsideLeg} := \begin{cases} \text{"OK"} & \text{if } Mu_{insideleg} < Mr_{insideleg} \\ \text{"NG"} & \text{otherwise} \end{cases} = \text{"OK"}$$

Minimum Reinforcement in Section 5.7.3.3.2

$f_r := 0.24 \cdot \sqrt{f_c \cdot ksi}$ $\quad f_r = 0.537 \cdot ksi$ 5.4.2.6

$I_{g_leg} := \frac{b_w \cdot t_{leg}^3}{12}$ $\quad I_{g_leg} = 512 \cdot in^4$

$y_{t_leg} := \frac{t_{leg}}{2}$ $\quad y_{t_leg} = 4 \cdot in$

$S_{c_leg} := \frac{I_{g_leg}}{y_{t_leg}} = 128 \cdot in^3$

$\gamma_1 := 1.2$ For precast members

$\gamma_3 := 0.67$ 0.67 for deformed bar

$M_{cr_leg} := \gamma_3 \cdot \gamma_1 \cdot f_r \cdot S_{c_leg}$ $\quad \boxed{M_{cr_leg} = 4.602 \cdot kip \cdot ft}$ 5.7.3.3.2

$$1.33 \cdot Mu_{insideleg} = 6.498 \cdot kip \cdot ft$$

The factored resistance shall be at least equal to the lesser of the above two values.

$$CheckMinRein_{Insideleg1} := \begin{cases} "OK" & \text{if } Mr_{insideleg} \geq \min(M_{cr_leg}, 1.33 \cdot Mu_{insideleg}) \\ "NG" & \text{otherwise} \end{cases} = "OK"$$

Minimum Reinforcement in Section 12.11.4.3.2

$$\rho_{insideleg} := \frac{As_{insideleg}}{t_{leg} \cdot b_w}$$

$$\rho_{insideleg} = 0.002$$

$$\rho_{min} := .002$$

$$CheckMinRein_{Insideleg2} := \begin{cases} "OK" & \text{if } \rho_{insideleg} \geq \rho_{min} \\ "NG" & \text{otherwise} \end{cases} = "OK"$$

Check Leg Shear (Design Section 3S):
Strength Limit State

$$d_{v_leg} := \min\left(\frac{Mn_{insideleg}}{As_{insideleg} \cdot f_y}, \frac{Mn_{outsideleg}}{As_{outsideleg} \cdot f_y}\right)$$ C5.8.2.9-1

$$d_{v_leg} = 5.279 \cdot in$$ Conservatively taking the smallest value for the leg.

$$Vu_{leg} := 5.834kip$$ Load Case #11

$$Mu_{leg_RISA} := 9.086kip \cdot ft$$ Max value at the same section & LC as Vu_{leg}

$$Nu_{leg} := -9.007kip$$ Min value at the same section & LC as Vu_{leg}
+ if tensile, - if compressive

Note: This is a conservative approach, since we are taking the worse values for each of

shear, moment, and axial.

Determine Shear Resistance Section 5.8.3.4.2

The section contains less than the minimum transverse reinforcement specified in 5.8.2.5, therefore use equation 5.8.3.4.2-2 to determine the longitudinal strain (ξ_x) at the location of maximum shear.

$$Mu_{leg} := \max(Mu_{leg_RISA}, Vu_{leg} \cdot d_{v_leg}) \qquad Mu_{leg} = 9.086 \cdot kip \cdot ft$$

In the eqtn below Mu shall not be less than $Vu \cdot d_v$

$$\xi_{sleg} := \frac{\frac{|Mu_{leg}|}{d_{v_leg}} + 0.5Nu_{leg} + |Vu_{leg}|}{E_s \cdot As_{outsideleg}} \qquad (5.8.3.4.2\text{-}4) \qquad 1000 \cdot \xi_{sleg} = 1.29$$

$$s_{x_leg} := d_{v_leg}$$

$$s_{xe_leg} := s_{x_leg} \cdot \frac{1.38in}{Aggregate_{diam} + 0.63in} = 5.279 \cdot in \qquad (5.8.3.4.2\text{-}5)$$

$$\beta_{leg} := \left(\frac{4.8}{1 + 750 \cdot \xi_{sleg}}\right) \cdot \left(\frac{51}{39 + \frac{s_{xe_leg}}{1in}}\right) = 2.813 \qquad (5.8.3.4.2\text{-}2)$$

$$\Theta_{leg} := 29deg + 3500deg \cdot \xi_{sleg} = 33.505 \cdot deg \qquad (5.8.3.4.2\text{-}3)$$

$$Vn_{leg} := \min\left(0.25 \cdot f_c \cdot b_w \cdot d_{v_leg}, 0.0316 \cdot \beta_{leg} \cdot \sqrt{f_c \cdot ksi} \cdot b_w \cdot d_{v_leg}\right) = 12.591 \cdot kip$$

$$Vr_{leg} := \phi_{shear} \cdot Vn_{leg} = 11.332 \cdot kip$$

$$Vu_{leg} = 5.834 \cdot kip$$

$$Check_{Vr} := \begin{cases} \text{"OK"} & \text{if } Vr_{leg} \geq Vu_{leg} \\ \text{"NG"} & \text{otherwise} \end{cases} = \text{"OK"}$$

Note: Per 5.8.2.4, Slabs, Footings, and Culverts are exempt from requiring transverse steel when $Vu > 0.5\phi Vc$.

Check Longitudinal Reinforcement per Section 5.8.3.5

Need to check each section investigated. Section 1M, 2M, & 3S.

Section 1M:

$Mu_{outsideleg} = 10.326 \cdot kip \cdot ft$ Restated from above

$Nu_{outsideleg} = -0.789 \cdot kip$ Restated from above

$Vu_{outsideleg} = 3.855 \cdot kip$ Restated from above

$As_{outsideleg} \cdot f_y = 35.343 \cdot kip$

Equation 5.8.3.5-1

$$long_{1M} := \frac{|Mu_{outsideleg}|}{d_{v_leg} \cdot \phi_{moment}} + 0.5 \cdot \frac{Nu_{outsideleg}}{\phi_{axial}} + \left| \frac{Vu_{outsideleg}}{\phi_{shear}} \right| \cdot \cot(\Theta_{leg}) = 32.115 \cdot kip$$

$$Check_{long1M} := \begin{cases} \text{"OK"} & \text{if } As_{outsideleg} \cdot f_y \geq long_{1M} \\ \text{"NG"} & \text{otherwise} \end{cases} = \text{"OK"}$$

Section 2M:

$Mu_{insideleg} = 4.886 \cdot kip \cdot ft$ Restated from above

$Nu_{insideleg} = -8.613 \cdot kip$ Restated from above

$Vu_{insideleg} = 0.378 \cdot kip$ Restated from above

$As_{insideleg} \cdot f_y = 11.781 \cdot kip$

Equation 5.8.3.5-1

$$long_{2M} := \frac{|Mu_{insideleg}|}{d_{v_leg} \cdot \phi_{moment}} + 0.5 \cdot \frac{Nu_{insideleg}}{\phi_{axial}} + \left| \frac{Vu_{insideleg}}{\phi_{shear}} \right| \cdot \cot(\Theta_{leg}) = 8.191 \cdot kip$$

$$Check_{long2M} := \begin{cases} \text{"OK"} & \text{if } As_{insideleg} \cdot f_y \geq long_{2M} \\ \text{"NG"} & \text{otherwise} \end{cases} = \text{"OK"}$$

Section 3S:

$Mu_{leg} = 9.086 \cdot kip \cdot ft$ Restated from above

$Nu_{leg} = -9.007 \cdot kip$ Restated from above

$Vu_{leg} = 5.834 \cdot kip$ Restated from Above

This design section is in the negative moment area near the knee so use outside leg reinforcing information.

$As_{outsideleg} \cdot f_y = 35.343 \cdot kip$

Equation 5.8.3.5-1

$$long_{3S} := \frac{|Mu_{leg}|}{d_{v_leg} \cdot \phi_{moment}} + 0.5 \cdot \frac{Nu_{leg}}{\phi_{axial}} + \left| \frac{Vu_{leg}}{\phi_{shear}} \right| \cdot \cot(\Theta_{leg}) = 27.739 \cdot kip$$

$$Check_{long3S} := \begin{cases} \text{"OK"} & \text{if } As_{outsideleg} \cdot f_y \geq long_{3S} \\ \text{"NG"} & \text{otherwise} \end{cases} = \text{"OK"}$$

Check Outside Frame Btm Slab Moment (Design Section 4M): Service Limit State

Check Crack Control in Section 5.7.3.4

$Ms_{outsidebtm} := 9.115 kip \cdot ft$ Load Case #3

$Ns_{outsidebtm} := -3.212 kip$ Min value at same section as Ms

Rebar Layout: $bar_{outsidebtm} := 6$ $s_{outsidebtm} := s_{outsideleg} = 9 \cdot in$

$$diam_{outsidebtm} := \frac{bar_{outsidebtm}}{8} in \qquad diam_{outsidebtm} = 0.75 \cdot in$$

$$As_{outsidebtm} := \frac{\pi \cdot diam_{outsidebtm}^2}{4} \cdot 12 \frac{in}{s_{outsidebtm}} \qquad As_{outsidebtm} = 0.59 \cdot in^2$$

$$d_{outsidebtm} := t_{btm} - cover - \frac{diam_{outsidebtm}}{2} \qquad d_{outsidebtm} = 8.125 \cdot in$$

Stress in reinforcement calculated per MacGregor
"Reinforced Concrete Mechanics and Design" 4th Ed, Section 9-2

$$\eta := \frac{E_s}{E_c} = 7.118$$

$$\rho_{outsidebtm} := \frac{As_{outsidebtm}}{b_w \cdot d_{outsidebtm}} = 0.006$$

$$k := \sqrt{2\rho_{outsidebtm} + \left(\rho_{outsidebtm} \cdot \eta\right)^2} - \rho_{outsidebtm} \cdot \eta$$

$$j_{outsidebtm} := 1 - \frac{k}{3} = 0.975$$

$$fss_{outsidebtm} := \frac{Ms_{outsidebtm} + Ns_{outsidebtm} \cdot \left(d_{outsidebtm} - \frac{t_{btm}}{2}\right)}{As_{outsidebtm} \cdot j_{outsidebtm} \cdot d_{outsidebtm}} = 21.289 \cdot ksi$$

Stress in Reinforcement at Service Limit State

$$d_{c_outsidebtm} := t_{btm} - d_{outsidebtm} \qquad d_{c_outsidebtm} = 1.875 \cdot in$$

$$\beta_s := 1 + \frac{d_{c_outsidebtm}}{0.7 \cdot \left(t_{btm} - d_{c_outsidebtm}\right)} \qquad \beta_s = 1.33$$

$$\gamma_e := 1.00$$ exposure factor

$$s_{max1} := \frac{700 \frac{kip}{in} \cdot \gamma_e}{\beta_s \cdot fss_{outsidebtm}} - 2 \cdot d_{c_outsidebtm} \qquad \boxed{s_{max1} = 20.978 \cdot in}$$

Check Minimum Bar Spacing in Section 5.10.3.1.2:

$$s_{min} := \max\left(diam_{outsidebtm}, 1.33 Aggregate_{diam}, 1in\right) \qquad \boxed{s_{min} = 1 \cdot in}$$

Check Minimum Bar Spacing in Section 5.10.3.2:

$$s_{max2} := \min\left(1.5 \cdot t_{btm}, 18in\right) \qquad \boxed{s_{max2} = 15 \cdot in}$$

$$CheckSpacing_{Outsidebtm} := \begin{cases} \text{"OK"} & \text{if } s_{min} \le s_{outsidebtm} \le \min(s_{max1}, s_{max2}) \\ \text{"NG"} & \text{otherwise} \end{cases} = \text{"OK"}$$

Check Deflection Control (AASHTO 2.5.2.6.2):

Not Applicable to this Design Section

Strength Limit State

Flexural Resistance in Section 5.7.3.2

$Mu_{outsidebtm} := 15.085 kip \cdot ft$ Load Case #3

$Nu_{outsidebtm} := -5.123 kip$ Min value at the same section & LC as $Mu_{outsidebtm}$
+ if tensile, - if compressive

$Vu_{outsidebtm} := 1.106 kip$ Max value at the same section & LC as $Mu_{outsidebtm}$

Verify that f_y can e substituted for f_s in the equations of 5.7.3.2. This is allowed when $\frac{c}{d_s} \le 0.60$.

$$c := \frac{As_{outsidebtm} \cdot f_y}{0.85 \cdot f_c \cdot \beta_1 \cdot b_w} \qquad c = 0.866 \cdot in$$

Simplified equation 5.7.3.1.2-4

$$\frac{c}{d_{outsidebtm}} = 0.107$$

This is less than 0.60 therefore f_y can be substituted for f_s

$$a_{outsidebtm} := \beta_1 \cdot c \qquad a_{outsidebtm} = 0.693 \cdot in$$

$$Mn_{outsidebtm} := As_{outsidebtm} \cdot f_y \cdot \left(d_{outsidebtm} - \frac{a_{outsidebtm}}{2} \right)$$

$$Mr_{outsidebtm} := \phi_{moment} \cdot Mn_{outsidebtm}$$

$$Mr_{outsidebtm} = 20.619 \cdot kip \cdot ft$$

$Mu_{outsidebtm} = 15.085 \cdot kip \cdot ft$

$$CheckMoment_{Outsidebtm} := \begin{cases} \text{"OK"} & \text{if } Mu_{outsidebtm} < Mr_{outsidebtm} \\ \text{"NG"} & \text{otherwise} \end{cases} = \text{"OK"}$$

Minimum Reinforcement in Section 5.7.3.3.2

$f_r := 0.24 \cdot \sqrt{f_c \cdot ksi}$ $\qquad f_r = 0.537 \cdot ksi$ $\qquad$ 5.4.2.6

$I_{g_btm} := \dfrac{b_w \cdot t_{btm}^3}{12}$ $\qquad I_{g_btm} = 1000 \cdot in^4$

$y_{t_btm} := \dfrac{t_{btm}}{2}$ $\qquad y_{t_btm} = 5 \cdot in$

$S_{c_btm} := \dfrac{I_{g_btm}}{y_{t_btm}} = 200 \cdot in^3$

$\gamma_1 := 1.2$ $\qquad$ For precast members

$\gamma_3 := 0.67$ $\qquad$ 0.67 for deformed bar

$M_{cr_btm} := \gamma_3 \cdot \gamma_1 \cdot f_r \cdot S_{c_btm}$ $\qquad \boxed{M_{cr_btm} = 7.191 \cdot kip \cdot ft}$ $\qquad$ 5.7.3.3.2

$\boxed{1.33 \cdot Mu_{outsidebtm} = 20.063 \cdot kip \cdot ft}$

The factored resistance shall be at least equal to the lesser of the above two values.

$$CheckMin_{Outbtm1} := \begin{cases} \text{"OK"} & \text{if } Mr_{outsidebtm} \geq \min\left(M_{cr_btm}, 1.33 \cdot Mu_{outsidebtm}\right) \\ \text{"NG"} & \text{otherwise} \end{cases} = \text{"OK"}$$

Minimum Reinforcement in Section 12.11.4.3.2

$\rho_{outsidebtm} := \dfrac{As_{outsidebtm}}{t_{btm} \cdot b_w}$ $\qquad \boxed{\rho_{outsidebtm} = 0.005}$

$\boxed{\rho_{min} := .002}$

$$CheckMinRein_{Outsidebtm2} := \begin{cases} \text{"OK"} & \text{if } \rho_{outsidebtm} \geq \rho_{min} \\ \text{"NG"} & \text{otherwise} \end{cases} = \text{"OK"}$$

Check Inside Btm Slab Moment (Design Section 5M):

Service Limit State

Check Crack Control in Section 5.7.3.4

$Ms_{insidebtm} := 5.271kip \cdot ft$ Load Case #9

$Ns_{insidebtm} := -2.363kip$ Min value at same section as Ms

Rebar Layout: $bar_{insidebtm} := 5$ $s_{insidebtm} := 12in$

$$diam_{insidebtm} := \frac{bar_{insidebtm}}{8} in \qquad diam_{insidebtm} = 0.625 \cdot in$$

$$As_{insidebtm} := \frac{\pi \cdot diam_{insidebtm}^2}{4} \cdot 12 \frac{in}{s_{insidebtm}} \qquad As_{insidebtm} = 0.31 \cdot in^2$$

$$d_{insidebtm} := t_{btm} - cover - \frac{diam_{insidebtm}}{2} \qquad d_{insidebtm} = 8.188 \cdot in$$

Stress in reinforcement calculated per MacGregor
"Reinforced Concrete Mechanics and Design" 4th Ed, Section 9-2

$$\eta := \frac{E_s}{E_c} = 7.118$$

$$\rho_{insidebtm} := \frac{As_{insidebtm}}{b_w \cdot d_{insidebtm}} = 0.003$$

$$k := \sqrt{2\rho_{insidebtm} + \left(\rho_{insidebtm} \cdot \eta\right)^2} - \rho_{insidebtm} \cdot \eta$$

$$j_{insidebtm} := 1 - \frac{k}{3} = 0.98$$

$$fss_{insidebtm} := \frac{Ms_{insidebtm} + Ns_{insidebtm} \cdot \left(d_{insidebtm} - \frac{t_{btm}}{2}\right)}{As_{insidebtm} \cdot j_{insidebtm} \cdot d_{insidebtm}} = 22.634 \cdot ksi$$

Stress in Reinforcement at Service Limit State

$d_{c_insidebtm} := t_{btm} - d_{insidebtm} = 1.813 \cdot in$

$\beta_s := 1 + \frac{d_{c_insidebtm}}{0.7 \cdot (t_{btm} - d_{c_insidebtm})}$ $\beta_s = 1.316$

$\gamma_e := 1.00$ exposure factor

$s_{max1} := \frac{700 \frac{kip}{in} \cdot \gamma_e}{\beta_s \cdot fss_{insidebtm}} - 2 \cdot d_{c_insidebtm}$ $s_{max1} = 19.871 \cdot in$

Check Minimum Bar Spacing in Section 5.10.3.1.2:

$s_{min} := \max(diam_{insidebtm}, 1.33 Aggregate_{diam}, 1in)$ $s_{min} = 1 \cdot in$

Check Minimum Bar Spacing in Section 5.10.3.2:

$s_{max2} := \min(1.5 \cdot t_{btm}, 18in)$ $s_{max2} = 15 \cdot in$

$$CheckSpacing_{Insidebtm} := \begin{cases} \text{"OK"} & \text{if } s_{min} \le s_{insidebtm} \le \min(s_{max1}, s_{max2}) \\ \text{"NG"} & \text{otherwise} \end{cases} = \text{"OK"}$$

Check Deflection Control (AASHTO 2.5.2.6.2):

Not Applicable to this Design Section

Strength Limit State

Flexural Resistance in Section 5.7.3.2

$Mu_{insidebtm} := 7.628 kip \cdot ft$ Load Case #11

$Nu_{insidebtm} := -5.471 kip$ Min value at the same section & LC as $Mu_{insidebtm}$
+ if tensile, - if compressive

$Vu_{insidebtm} := 1.001kip$ Max value at the same section & LC as $Mu_{insidebtm}$

Verify that f_y can be substituted for f_s in the equations of 5.7.3.2. This is allowed when $\frac{c}{d_s} \le 0.60$.

$c := \frac{As_{insidebtm} \cdot f_y}{0.85 \cdot f_c \cdot \beta_1 \cdot b_w}$ $c = 0.451 \cdot in$ Simplified equation 5.7.3.1.2-4

$\frac{c}{d_{insidebtm}} = 0.055$ **This is less than 0.60 therefore f_y can be substituted for f_s**

$a_{insidebtm} := \beta_1 \cdot c$ $a_{insidebtm} = 0.361 \cdot in$

$Mn_{insidebtm} := As_{insidebtm} \cdot f_y \cdot \left(d_{insidebtm} - \frac{a_{insidebtm}}{2} \right)$

$Mr_{insidebtm} := \phi_{moment} \cdot Mn_{insidebtm}$

$Mr_{insidebtm} = 11.054 \cdot kip \cdot ft$

$Mu_{insidebtm} = 7.628 \cdot kip \cdot ft$

$$CheckMoment_{Insidebtm} := \begin{cases} "OK" & \text{if } Mu_{insidebtm} < Mr_{insidebtm} \\ "NG" & \text{otherwise} \end{cases} = "OK"$$

Minimum Reinforcement in Section 5.7.3.3.2

$f_r := 0.24 \cdot \sqrt{f_c \cdot ksi}$ $f_r = 0.537 \cdot ksi$ 5.4.2.6

$I_{g_btm} := \frac{b_w \cdot t_{btm}^3}{12}$ $I_{g_btm} = 1000 \cdot in^4$

$y_{t_btm} := \frac{t_{btm}}{2}$ $y_{t_btm} = 5 \cdot in$

$S_{c_btm} := \frac{I_{g_btm}}{y_{t_btm}} = 200 \cdot in^3$

$\gamma_1 := 1.2$ For precast members

$\gamma_3 := 0.67$ 0.67 for deformed bar

$M_{cr_leg} := \gamma_3 \cdot \gamma_1 \cdot f_r \cdot S_{c_leg}$ $M_{cr_btm} = 7.191 \cdot kip \cdot ft$ 5.7.3.3.2

$1.33 \cdot Mu_{insidebtm} = 10.145 \cdot kip \cdot ft$

The factored resistance shall be at least equal to the lesser of the above two values.

$$CheckMin_{Insidebtm1} := \begin{cases} \text{"OK"} & \text{if } Mr_{insidebtm} \geq \min(M_{cr_btm}, 1.33 \cdot Mu_{insidebtm}) \\ \text{"NG"} & \text{otherwise} \end{cases} = \text{"OK"}$$

Minimum Reinforcement in Section 12.11.4.3.2

$$\rho_{insidebtm} := \frac{As_{insidebtm}}{t_{btm} \cdot b_w}$$ $\rho_{insidebtm} = 0.003$

$\rho_{min} := .002$

$$CheckMinRein_{Insidebtm2} := \begin{cases} \text{"OK"} & \text{if } \rho_{insidebtm} \geq \rho_{min} \\ \text{"NG"} & \text{otherwise} \end{cases} = \text{"OK"}$$

Check Btm Slab Shear (Design Section 6S): Strength Limit State

$$d_{v_btm} := \min\left(\frac{Mn_{insidebtm}}{As_{insidebtm} \cdot f_y}, \frac{Mn_{outsidebtm}}{As_{outsidebtm} \cdot f_y}\right)$$ C5.8.2.9-1

$d_{v_btm} = 7.779 \cdot in$ Conservatively taking the smallest value for the btm.

$Vu_{btm} := 9.684kip$ Load Case #11

$Mu_{btm_RISA} := 8.537kip \cdot ft$ Max value at the same section & LC as Vu_{btm}

$Nu_{btm} := -5.471kip$ Min value at the same section & LC as Vu_{btm}
+ if tensile, - if compressive

Note: This is a conservative approach, since we are taking the worse values for each of

shear, moment, and axial.

Determine Shear Resistance Section 5.8.3.4.2

The section contains less than the minimum transverse reinforcement specified in 5.8.2.5, therefore use equation 5.8.3.4.2-2 to determine the longitudinal strain (ξ_x) at the location of maximum shear.

$Mu_{btm} := \max(Mu_{btm_RISA}, Vu_{btm} \cdot d_{v_btm})$ $\qquad Mu_{btm} = 8.537 \cdot kip \cdot ft$

In the eqtn below Mu shall not be less than $Vu \cdot d_v$

$$\xi_{sbtm} := \frac{\frac{|Mu_{btm}|}{d_{v_btm}} + 0.5Nu_{btm} + |Vu_{btm}|}{E_s \cdot As_{outsidebtm}} \qquad (5.8.3.4.2\text{-}4) \qquad 1000 \cdot \xi_{sbtm} = 1.18$$

$s_{x_btm} := d_{v_btm}$

$$s_{xe_btm} := s_{x_btm} \cdot \frac{1.38in}{Aggregate_{diam} + 0.63in} = 7.779 \cdot in \qquad (5.8.3.4.2\text{-}5)$$

$$\beta_{btm} := \left(\frac{4.8}{1 + 750 \cdot \xi_{sbtm}}\right) \cdot \left(\frac{51}{39 + \frac{s_{xe_btm}}{1in}}\right) = 2.779 \qquad (5.8.3.4.2\text{-}2)$$

$$\Theta_{btm} := 29deg + 3500deg \cdot \xi_{sbtm} = 33.122 \cdot deg \qquad (5.8.3.4.2\text{-}3)$$

$$Vn_{btm} := \min\left(0.25 \cdot f_c \cdot b_w \cdot d_{v_btm}, 0.0316 \cdot \beta_{btm} \cdot \sqrt{f_c \cdot ksi} \cdot b_w \cdot d_{v_btm}\right) = 18.327 \cdot kip$$

$$\boxed{Vr_{btm} := \phi_{shear} \cdot Vn_{btm} = 16.494 \cdot kip}$$

$Vu_{btm} = 9.684 \cdot kip$

$$Check_{Vr} := \begin{cases} \text{"OK"} & \text{if } Vr_{btm} \geq Vu_{btm} \\ \text{"NG"} & \text{otherwise} \end{cases} = \text{"OK"}$$

Note: Per 5.8.2.4 Slabs, Footings, and Culverts are exempt from requiring transverse steel when $Vu > 0.5\phi Vc$.

Check Longitudinal Reinforcement per Section 5.8.3.5

Need to check each section investigated. Section 4M, 5M, & 6S.

Section 4M:

$Mu_{outsidebtm} = 15.085 \cdot kip \cdot ft$ Restated from above

$Nu_{outsidebtm} = -5.123 \cdot kip$ Restated from above

$Vu_{outsidebtm} = 1.106 \cdot kip$ Restated from above

$As_{outsidebtm} \cdot f_y = 35.343 \cdot kip$ Equation 5.8.3.5-1

$$long_{4M} := \frac{\left|Mu_{outsidebtm}\right|}{d_{v_btm} \cdot \phi_{moment}} + 0.5 \cdot \frac{Nu_{outsidebtm}}{\phi_{axial}} + \left|\frac{Vu_{outsidebtm}}{\phi_{shear}}\right| \cdot \cot\left(\Theta_{btm}\right) = 24.895 \cdot kip$$

$$Check_{long4M} := \begin{cases} \text{"OK"} & \text{if } As_{outsidebtm} \cdot f_y \geq long_{4M} \\ \text{"NG"} & \text{otherwise} \end{cases} = \text{"OK"}$$

Section 5M:

$Mu_{insidebtm} = 7.628 \cdot kip \cdot ft$ Restated from above

$Nu_{insidebtm} = -5.471 \times 10^3 \, lbf$ Restated from above

$Vu_{insidebtm} = 1.001 \cdot kip$ Restated from above

$As_{insidebtm} \cdot f_y = 18.408 \cdot kip$

Equation 5.8.3.5-1

$$long_{5M} := \frac{\left|Mu_{insidebtm}\right|}{d_{v_btm} \cdot \phi_{moment}} + 0.5 \cdot \frac{Nu_{insidebtm}}{\phi_{axial}} + \left|\frac{Vu_{insidebtm}}{\phi_{shear}}\right| \cdot \cot\left(\Theta_{btm}\right) = 11.741 \cdot kip$$

$$Check_{long5M} := \begin{cases} \text{"OK"} & \text{if } As_{insidebtm} \cdot f_y \geq long_{5M} \\ \text{"NG"} & \text{otherwise} \end{cases} = \text{"OK"}$$

Section 6S:

$Mu_{btm} = 8.537 \cdot kip \cdot ft$ Restated from above

$Nu_{btm} = -5.471 \cdot kip$ Restated from above

$Vu_{btm} = 9.684 \cdot kip$ Restated from Above

This design section is in the negative moment area near the knee so use outside btm reinforcing information.

$As_{outsidebtm} \cdot f_y = 35.343 \cdot kip$

Equation 5.8.3.5-1

$$long_{6S} := \frac{|Mu_{btm}|}{d_{v_btm} \cdot \phi_{moment}} + 0.5 \cdot \frac{Nu_{btm}}{\phi_{axial}} + \left| \frac{Vu_{btm}}{\phi_{shear}} \right| \cdot \cot(\Theta_{btm}) = 28.086 \cdot kip$$

$$Check_{long6S} := \begin{cases} \text{"OK"} & \text{if } As_{outsidebtm} \cdot f_y \geq long_{6S} \\ \text{"NG"} & \text{otherwise} \end{cases} = \text{"OK"}$$

Check Inside Deck Moment (Design Section 7M):

Service Limit State

Check Crack Control in Section 5.7.3.4

$Ms_{insidedeck} := 27.534 kip \cdot ft$ Load Case #9

$Ns_{insidedeck} := -0.161 kip$ Min value at same section as Ms

Rebar Layout: $bar_{insidedeck} := 8$ $s_{insidedeck} := 7 in$

$$diam_{insidedeck} := \frac{bar_{insidedeck}}{8} in \qquad diam_{insidedeck} = 1 \cdot in$$

$$As_{insidedeck} := \frac{\pi \cdot diam_{insidedeck}^2}{4} \cdot 12 \frac{in}{s_{insidedeck}} \qquad As_{insidedeck} = 1.35 \cdot in^2$$

$$d_{insidedeck} := t_{deck} - cover_{insidedeck} - \frac{diam_{insidedeck}}{2} \qquad d_{insidedeck} = 8 \cdot in$$

Stress in reinforcement calculated per MacGregor
"Reinforced Concrete Mechanics and Design" 4th Ed, Section 9-2

$$\eta := \frac{E_s}{E_c} = 7.118$$

$$\rho_{insidedeck} := \frac{As_{insidedeck}}{b_w \cdot d_{insidedeck}} = 0.014$$

$$k := \sqrt{2\rho_{insidedeck} + \left(\rho_{insidedeck} \cdot \eta\right)^2} - \rho_{insidedeck} \cdot \eta$$

$$j_{insidedeck} := 1 - \frac{k}{3} = 0.968$$

$$fss_{insidedeck} := \frac{Ms_{insidedeck} + Ns_{insidedeck} \cdot \left(d_{insidedeck} - \frac{t_{deck}}{2}\right)}{As_{insidedeck} \cdot j_{insidedeck} \cdot d_{insidedeck}} = 31.634 \cdot ksi$$

Stress in Reinforcement at Service Limit State

$$d_{c_insidedeck} := t_{deck} - d_{insidedeck} \qquad d_{c_insidedeck} = 2 \cdot in$$

$$\beta_s := 1 + \frac{d_{c_insidedeck}}{0.7 \cdot \left(t_{deck} - d_{c_insidedeck}\right)} \qquad \beta_s = 1.357$$

$$\gamma_e := 1.00$$ exposure factor

$$s_{max1} := \frac{700 \frac{kip}{in} \cdot \gamma_e}{\beta_s \cdot fss_{insidedeck}} - 2 \cdot d_{c_insidedeck} \qquad \boxed{s_{max1} = 12.305 \cdot in}$$

Check Minimum Bar Spacing in Section 5.10.3.1.2:

$s_{min} := \max(diam_{insidedeck}, 1.33Aggregate_{diam}, 1in)$ $\boxed{s_{min} = 1 \cdot in}$

Check Minimum Bar Spacing in Section 5.10.3.2:

$s_{max2} := \min(1.5 \cdot t_{deck}, 18in)$ $\boxed{s_{max2} = 15 \cdot in}$

$$CheckSpacing_{InsideDeck} := \begin{cases} \text{"OK"} & \text{if } s_{min} \le s_{insidedeck} \le \min(s_{max1}, s_{max2}) \\ \text{"NG"} & \text{otherwise} \end{cases} = \text{"OK"}$$

Check Deflection Control (AASHTO 2.5.2.6.2):

See Below

Strength Limit State

Flexural Resistance in Section 5.7.3.2

$\boxed{Mu_{insidedeck} := 39.005kip \cdot ft}$ Load Case #9

$\boxed{Nu_{insidedeck} := -0.411kip}$ Min value at the same section & LC as $Mu_{insidedeck}$
+ if tensile, - if compressive

$\boxed{Vu_{insidedeck} := 0.969kip}$ Max value at the same section & LC as $Mu_{insidedeck}$

Verify that f_y can be substituted for f_s in the equations of 5.7.3.2. This is allowed when $\frac{c}{d_s} \le 0.60$.

$c := \frac{As_{insidedeck} \cdot f_y}{0.85 \cdot f_c \cdot \beta_1 \cdot b_w}$ $c = 1.98 \cdot in$ Simplified equation 5.7.3.1.2-4

$\frac{c}{d_{insidedeck}} = 0.247$ **This is less than 0.60 therefore f_y can be substituted for f_s**

$a_{insidedeck} := \beta_1 \cdot c$ $a_{insidedeck} = 1.584 \cdot in$

$$Mn_{insidedeck} := As_{insidedeck} \cdot f_y \cdot \left(d_{insidedeck} - \frac{a_{insidedeck}}{2} \right)$$

$$Mr_{insidedeck} := \phi_{moment} \cdot Mn_{insidedeck}$$

$$\boxed{Mr_{insidedeck} = 43.672 \cdot kip \cdot ft}$$

$$Mu_{insidedeck} = 39.005 \cdot kip \cdot ft$$

$$CheckMoment_{Insidedeck} := \begin{cases} \text{"OK"} & \text{if } Mu_{insidedeck} < Mr_{insidedeck} \\ \text{"NG"} & \text{otherwise} \end{cases} = \text{"OK"}$$

Minimum Reinforcement in Section 5.7.3.3.2

$f_r := 0.24 \cdot \sqrt{f_c \cdot ksi}$ $\qquad f_r = 0.537 \cdot ksi$ $\qquad$ 5.4.2.6

$I_{g_deck} := \dfrac{b_w \cdot t_{deck}^3}{12}$ $\qquad I_{g_deck} = 1000 \cdot in^4$

$y_{t_deck} := \dfrac{t_{deck}}{2}$ $\qquad y_{t_deck} = 5 \cdot in$

$S_{c_deck} := \dfrac{I_{g_deck}}{y_{t_deck}} = 200 \cdot in^3$

$\gamma_1 := 1.2$ $\qquad$ For precast members

$\gamma_3 := 0.67$ $\qquad$ 0.67 for deformed bar

$M_{cr_deck} := \gamma_3 \cdot \gamma_1 \cdot f_r \cdot S_{c_deck}$ $\qquad \boxed{M_{cr_deck} = 7.191 \cdot kip \cdot ft}$ $\qquad$ 5.7.3.3.2

$$\boxed{1.33 \cdot Mu_{insidedeck} = 51.877 \cdot kip \cdot ft}$$

The factored resistance shall be at least equal to the lesser of the above two values.

$$CheckMin_{Insidedeck1} := \begin{cases} \text{"OK"} & \text{if } Mr_{insidedeck} \geq \min\left(M_{cr_deck}, 1.33 \cdot Mu_{insidedeck}\right) \\ \text{"NG"} & \text{otherwise} \end{cases} = \text{"OK"}$$

Minimum Reinforcement in Section 12.11.4.3.2

$$\rho_{insidedeck} := \frac{As_{insidedeck}}{t_{deck} \cdot b_w}$$ $\rho_{insidedeck} = 0.011$

$\rho_{min} := .002$

$$CheckMinRein_{Insidedeck2} := \begin{cases} \text{"OK"} & \text{if } \rho_{insidedeck} \geq \rho_{min} \\ \text{"NG"} & \text{otherwise} \end{cases} = \text{"OK"}$$

Check Deck Shear (Design Section 8S):

Strength Limit State

$$d_{v_deck} := \frac{Mn_{insidedeck}}{As_{insidedeck} \cdot f_y} = 7.208 \cdot in$$ C5.8.2.9-1

$Vu_{deck} := 10.312kip$ Load Case #9

$Mu_{deck_RISA} := 11.922kip \cdot ft$ Max value at the same section & LC as Vu_{deck}

$Nu_{deck} := -0.411kip$ Min value at the same section & LC as Vu_{deck}

+ if tensile, - if compressive

Note: This is a conservative approach, since we are taking the worse values for each of shear, moment, and axial.

Determine Shear Resistance Section 5.8.3.4.2

The section contains less than the minimum transverse reinforcement specified in 5.8.2.5, therefore use equation 5.8.3.4.2-2 to determine the longitudinal strain (ξ_x) at the location of maximum shear.

$$Mu_{deck} := \max(Mu_{deck_RISA}, Vu_{deck} \cdot d_{v_deck})$$ $Mu_{deck} = 11.922 \cdot kip \cdot ft$

In the eqtn below Mu shall not be less than $Vu \cdot d_v$

$$\xi_{sdeck} := \frac{\frac{|Mu_{deck}|}{d_{v_deck}} + 0.5Nu_{deck} + |Vu_{deck}|}{E_s \cdot As_{insidedeck}}$$ (5.8.3.4.2-4) $1000 \cdot \xi_{sdeck} = 0.77$

$s_{x_deck} := d_{v_deck} = 7.208 \cdot in$

$s_{xe_deck} := s_{x_deck} \cdot \frac{1.38in}{Aggregate_{diam} + 0.63in} = 7.208 \cdot in$ (5.8.3.4.2-5)

$\beta_{deck} := \left(\frac{4.8}{1 + 750 \cdot \xi_{sdeck}}\right) \cdot \left(\frac{51}{39 + \frac{s_{xe_deck}}{1in}}\right) = 3.363$ (5.8.3.4.2-2)

$\Theta_{deck} := 29deg + 3500deg \cdot \xi_{sdeck} = 31.685 \cdot deg$ (5.8.3.4.2-3)

$Vn_{deck} := \min\left(0.25 \cdot f_c \cdot b_w \cdot d_{v_deck}, 0.0316 \cdot \beta_{deck} \cdot \sqrt{f_c \cdot ksi} \cdot b_w \cdot d_{v_deck}\right) = 20.553 \cdot kip$

$\boxed{Vr_{deck} := \phi_{shear} \cdot Vn_{deck} = 18.498 \cdot kip}$

$Vu_{deck} = 10.312 \cdot kip$

$Check_{Vr} := \begin{cases} \text{"OK"} & \text{if } Vr_{deck} \geq Vu_{deck} \\ \text{"NG"} & \text{otherwise} \end{cases} = \text{"OK"}$

Note: Per 5.8.2.4 Slabs, Footings, and Culverts are exempt from requiring transverse steel when $Vu > 0.5\phi Vc$.

Check Longitudinal Reinforcement per Section 5.8.3.5

Need to check each section investigated. Section 7M & 8S.

Section 7M:

$Mu_{insidedeck} = 39.005 \cdot kip \cdot ft$ Restated from above

$Nu_{insidedeck} = -411\ lbf$ Restated from above

$Vu_{insidedeck} = 0.969 \cdot kip$ Restated from above

$As_{insidedeck} \cdot f_y = 80.784 \cdot kip$

Equation 5.8.3.5-1

$$long_{7M} := \frac{\left|Mu_{insidedeck}\right|}{d_{v_deck} \cdot \phi_{moment}} + 0.5 \cdot \frac{Nu_{insidedeck}}{\phi_{axial}} + \left|\frac{Vu_{insidedeck}}{\phi_{shear}}\right| \cdot \cot\left(\Theta_{deck}\right) = 73.667 \cdot kip$$

$$Check_{long7M} := \begin{cases} \text{"OK"} & \text{if } As_{insidedeck} \cdot f_y \geq long_{7M} \\ \text{"NG"} & \text{otherwise} \end{cases} = \text{"OK"}$$

Section 8S:

$Mu_{deck} = 11.922 \cdot kip \cdot ft$ Restated from above

$Nu_{deck} = -0.411 \cdot kip$ Restated from above

$Vu_{deck} = 10.312 \cdot kip$ Restated from Above

$0.20ksi \cdot f_y = 8.006 \times 10^9 \frac{lb}{ft^3 \cdot s^2} \cdot kip$

Equation 5.8.3.5-1

$$long_{8S} := \frac{\left|Mu_{deck}\right|}{d_{v_deck} \cdot \phi_{moment}} + 0.5 \cdot \frac{Nu_{deck}}{\phi_{axial}} + \left|\frac{Vu_{deck}}{\phi_{shear}}\right| \cdot \cot\left(\Theta_{deck}\right) = 40.387 \cdot kip$$

$$Check_{long8S} := \begin{cases} \text{"OK"} & \text{if } As_{insidedeck} \cdot f_y \geq long_{8S} \\ \text{"NG"} & \text{otherwise} \end{cases} = \text{"OK"}$$

Check Distribution Reinforcement (AASHTO 9.7.3.2):

Not applicable for soil depths greater than 2ft

Check Deflection Control (AASHTO 2.5.2.6.2, & 5.7.3.6.2):

AASHTO does not specify deflection control as a requirement, but top slab deflection will still be checked in accordance with section 2.5.2.6.2
Section 2.5.2.6.2 gives a deflection limit of Span/800 for Vehicle Loads & Span/1000 for Vehicle & Pedestrian Loads. Section 5.7.3.6.2 states that deflections may be determined as follows:

$M_{cr_deck} = 7.191 \cdot kip \cdot ft$ Restated from above

$M_{DL_midspan} := 20.112 kip \cdot ft$ Midspan Moment, Load Case #4 (Service I)

$M_{DL_knee} := 0 kip \cdot ft$ No End Moment in separate top slab

$Ms_{insidedeck} = 27.534 \cdot kip \cdot ft$ Restated from above

Since Service Dead Load Moment at Midspan (where we are calculating the deflection) is greater than the cracking moment need to use effective moment of inertia.

Conservatively neglect Top mat of steel in calculating cracked moment of inertia.

$\rho_{insidedeck} = 0.011$

$n := \frac{E_s}{E_c}$ $n = 7.118$

$k := \sqrt{2 \cdot \rho_{insidedeck} \cdot n + \left(\rho_{insidedeck} \cdot n\right)^2} - \rho_{insidedeck} \cdot n$ MacGregor - 2nd Ed. Reinforced Concrete Design (9-3)

$k = 0.328$

$y_n := k \cdot d_{insidedeck}$ $y_n = 2.622 \cdot in$ Depth from compression fiber to bottom of compression block.

$area_{comp_block} := b_w \cdot y_n$ $area_{comp_block} = 31.459 \cdot in^2$

$$I_{comp_block} := \frac{b_w \cdot y_n^3}{12} \qquad I_{comp_block} = 18.017 \cdot in^4$$

$$area_{steel} := As_{insidedeck} \cdot n \qquad area_{steel} = 9.583 \cdot in^2$$

$$I_{cr_insidedeck} := I_{comp_block} + area_{comp_block} \cdot \left(\frac{y_n}{2}\right)^2 + area_{steel} \cdot \left(d_{insidedeck} - y_n\right)^2$$

$$I_{cr_insidedeck} = 349.293 \cdot in^4$$

$$I_{e_DL} := \min\left[\left[\left(\frac{M_{cr_deck}}{M_{DL_midspan}}\right)^3 \cdot I_{g_deck} + \left[1 - \left(\frac{M_{cr_deck}}{M_{DL_midspan}}\right)^3\right] \cdot I_{cr_insidedeck}\right], I_{g_deck}\right]$$

$$I_{e_DL} = 379.039 \cdot in^4$$

AASHTO Eqtn:5.7.3.6.2-1

$$\Delta_{DL} := \frac{5}{48} \cdot \frac{S^2}{E_c \cdot I_{e_DL}} \cdot \left(M_{DL_midspan} + 0.2 \cdot M_{DL_knee}\right)$$

$$\Delta_{DL} = 0.338 \cdot in$$

$$M_{DL_LL_mid} := Ms_{insidedeck} = 27.534 \cdot kip \cdot ft$$

$$M_{DL_LL_knee} := 0 kip \cdot ft$$

No End Moment in separate top slab

Since Total Service Load Moment at Midspan (where we are calculating the deflection) is greater than the cracking moment need to use effective moment of inertia to calculate deflections.

Conservatively neglect Top mat of steel in calculating cracked moment of inertia.

$$\rho_{insidedeck} = 0.011$$

$n := \frac{E_s}{E_c}$ $\quad n = 7.118$

$k := \sqrt{2 \cdot \rho_{insidedeck} \cdot n + \left(\rho_{insidedeck} \cdot n\right)^2} - \rho_{insidedeck} \cdot n$

MacGregor - 2nd Ed.
Reinforced Concrete Design (9-3)

$k = 0.328$

$y_n := k \cdot d_{insidedeck}$ $\quad y_n = 2.622 \cdot in$

Depth from compression fiber to bottom of compression block.

$area_{comp_block} := b_w \cdot y_n$ $\quad area_{comp_block} = 31.459 \cdot in^2$

$I_{comp_block} := \frac{b_w \cdot y_n^3}{12}$ $\quad I_{comp_block} = 18.017 \cdot in^4$

$area_{steel} := As_{insidedeck} \cdot n$ $\quad area_{steel} = 9.583 \cdot in^2$

$I_{cr_insidedeck} := I_{comp_block} + area_{comp_block} \cdot \left(\frac{y_n}{2}\right)^2 + area_{steel} \cdot \left(d_{insidedeck} - y_n\right)^2$

$I_{cr_insidedeck} = 349.293 \cdot in^4$

$$I_{e_DL_LL} := \min\left[\left[\left(\frac{M_{cr_deck}}{M_{DL_LL_mid}}\right)^3 \cdot I_{g_deck} + \left[1 - \left(\frac{M_{cr_deck}}{M_{DL_LL_mid}}\right)^3\right] \cdot I_{cr_insidedeck}\right], I_{g_deck}\right]$$

$I_{e_DL_LL} = 360.886 \cdot in^4$

$$\Delta_{DL_LL} := \frac{5}{48} \cdot \frac{S^2}{E_c \cdot I_{e_DL_LL}} \cdot \left(M_{DL_LL_mid} + 0.2 \cdot M_{DL_LL_knee}\right)$$

$\Delta_{DL_LL} = 0.485 \cdot in$

$\Delta_{LL} := \Delta_{DL_LL} - \Delta_{DL}$ $\Delta_{LL} = 0.148 \cdot in$

$\Delta_{LL_Ratio} := \frac{S}{\Delta_{LL}}$ $\Delta_{LL_Ratio} = 974$

$\Delta_{LL_allow} := 800$

800 for vehicle. 1000 for vehicle and pedestrian

$$Check_{deflection} := \begin{cases} \text{"OK"} & \text{if } \Delta_{LL_Ratio} \geq \Delta_{LL_allow} \\ \text{"NG"} & \text{otherwise} \end{cases} = \text{"OK"}$$

Company : Renaud
Designer : P Lefebvre
Job Number : 5778
12x7 BCwTS - BR52 - In Service Phase - Factored Loads - LC11 Only

Feb 23, 2015
5:29 PM
Checked By:_____

Concrete Properties

	Label	E [ksi]	G [ksi]	Nu	Therm (\1E...	Density[k/ft...	f'c[ksi]	Lambda	Flex Steel[...	Shear Stee...
1	Conc3000NW	3156	1372	.15	.6	.145	3	1	60	60
2	Conc3500NW	3409	1482	.15	.6	.145	3.5	1	60	60
3	Conc4000NW	3644	1584	.15	.6	.145	4	1	60	60
4	Conc5000NW	4074		.15	.6	.145	5	1	60	60
5	Conc3000LW	2085	907	.15	.6	.11	3	.75	60	60
6	Conc3500LW	2252	979	.15	.6	.11	3.5	.75	60	60
7	Conc4000LW	2408	1047	.15	.6	.11	4	.75	60	60

Concrete Section Sets

	Label	Shape	Type	Design List	Material	Design Rules	A [in2]	Iyy [in4]	Izz [in4]	J [in4]
1	LEG	CRECT8X12	Column	Rectangular...	Conc5000NW	Typical	96	1152	512	1187.84
2	DECK	CRECT10X12	Beam	Rectangular...	Conc5000NW	Typical	120	1440	1000	1900
3	BOTTOM	CRECT10X12	Beam	Rectangular...	Conc5000NW	Typical	120	1440	1000	1900

Joint Coordinates and Temperatures

	Label	X [in]	Y [in]	Z [in]	Temp [F]	Detach From Diap...
1	N1	0	0	0	0	
2	N2	0	94	0	0	
3	N3	152	94	0	0	
4	N4	152	0	0	0	
5	N5	12.666667	0	0	0	
6	N6	25.333333	0	0	0	
7	N7	38	0	0	0	
8	N8	50.666667	0	0	0	
9	N9	63.333333	0	0	0	
10	N10	76	0	0	0	
11	N11	88.666667	0	0	0	
12	N12	101.333333	0	0	0	
13	N13	114	0	0	0	
14	N14	126.666667	0	0	0	
15	N15	139.333333	0	0	0	

Joint Boundary Conditions

	Joint Label	X [k/in]	Y [k/in]	Z [k/in]	X Rot.[k-ft/rad]	Y Rot.[k-ft/rad]	Z Rot.[k-ft/rad]	Footing
1	N1	Reaction	CS30.4	Reaction	Reaction	Reaction		
2	N2							
3	N3							
4	N4		CS30.4					
5	N5		CS30.4					
6	N6		CS30.4					
7	N7		CS30.4					
8	N8		CS30.4					
9	N9		CS30.4					
10	N10		CS30.4					
11	N11		CS30.4					
12	N12		CS30.4					
13	N13		CS30.4					
14	N14		CS30.4					
15	N15		CS30.4					

Member Primary Data

	Label	I Joint	J Joint	K Joint	Rotate(d...	Section/Sha...	Type	Design List	Material	Design Ru...
1	M1	N2	N1			LEG	Column	Rectangular_MM	Conc500...	Typical
2	M2	N3	N4			LEG	Column	Rectangular_MM	Conc500...	Typical
3	M3	N1	N4			BOTTOM	Beam	Rectangular_MM	Conc500...	Typical
4	M4	N2	N3			DECK	Beam	Rectangular_MM	Conc500...	Typical

Member Advanced Data

	Label	I Release	J Release	I Offset[in]	J Offset[in]	T/C Only	Physical	TOM	Inactive	Seismic Design...
1	M1						Yes			None
2	M2						Yes			None
3	M3						Yes			None
4	M4	BenPIN	BenPIN				Yes			None

Basic Load Cases

	BLC Description	Category	X Gra...	Y Gra...	Z Gra...	Joint	Point	Distri...	Area(Member)	Surface(Plate/...
1	DEAD LOAD	DL		-1						
2	EP LEFT LEG	EPL						1		
3	EP RIGHT LEG	EPL						1		
4	OVERBURDEN SOIL LEG	EPL						2		
5	OVERBURDEN SOIL DECK	LL						1		
6	SUR LEFT LEG	LL						1		
7	SUR RIGHT LEG	LL						1		

Member Distributed Loads (BLC 2 : EP LEFT LEG)

	Member Label	Direction	Start Magnitude[k/ft,F]	End Magnitude[k/ft...	Start Location[in,%]	End Location[in,%]
1	M1	X	0	.508	0	0

Member Distributed Loads (BLC 3 : EP RIGHT LEG)

	Member Label	Direction	Start Magnitude[k/ft,F]	End Magnitude[k/ft...	Start Location[in,%]	End Location[in,%]
1	M2	X	0	-.508	0	0

Member Distributed Loads (BLC 4 : OVERBURDEN SOIL LEG)

	Member Label	Direction	Start Magnitude[k/ft,F]	End Magnitude[k/ft...	Start Location[in,%]	End Location[in,%]
1	M1	X	.443	.443	0	0
2	M2	X	-.443	-.443	0	0

Member Distributed Loads (BLC 5 : OVERBURDEN SOIL DECK)

	Member Label	Direction	Start Magnitude[k/ft,F]	End Magnitude[k/ft...	Start Location[in,%]	End Location[in,%]
1	M4	Y	-.882	-.882	0	0

Member Distributed Loads (BLC 6 : SUR LEFT LEG)

	Member Label	Direction	Start Magnitude[k/ft,F]	End Magnitude[k/ft...	Start Location[in,%]	End Location[in,%]
1	M1	X	.156	.156	0	0

Member Distributed Loads (BLC 7 : SUR RIGHT LEG)

	Member Label	Direction	Start Magnitude[k/ft,F]	End Magnitude[k/ft...	Start Location[in,%]	End Location[in,%]
1	M2	X	-.156	-.156	0	0

Moving Loads

	Tag	Pattern	Increment[in]	Bot...	1st J...	2nd J...	3rd J...	4th J...	5th J...	6th J...	7th J...	8th J...	9th J...	10th ...
1	M1	6FT_DISTRIB_TRUCK	6	Yes	N2	N3								
2	M2	6FT_DISTRIB_TANDEM	6	Yes	N2	N3								

Moving Load Patterns

Pattern Label	Load (k)	Direction	Distance (in)

¢7

Pattern Label	Load (k)	Direction	Distance (in)
6FT_DISTRIB_TRUCK	-.105	V	0
	-.105	V	3.864
	-.105	V	3.864
	-.105	V	3.864
	-.105	V	3.864
	-.105	V	3.864
	-.105	V	3.864
	-.105	V	3.864
	-.105	V	3.864
	-.105	V	3.864
	-.105	V	3.864
	-.105	V	3.864
	-.105	V	3.864
	-.105	V	3.864
	-.105	V	3.864
	-.105	V	3.864
	-.105	V	3.864
	-.105	V	3.864
	-.105	V	3.864
	-.105	V	3.864
	-.105	V	3.864
	-.105	V	3.864
	-.105	V	3.864
	-.105	V	3.864
	-.105	V	3.864
	-.105	V	3.864
	-.105	V	3.864
	-.105	V	3.864
	-.105	V	75.204
	-.105	V	3.864
	-.105	V	3.864
	-.105	V	3.864
	-.105	V	3.864
	-.105	V	3.864
	-.105	V	3.864
	-.105	V	3.864
	-.105	V	3.864
	-.105	V	3.864
	-.105	V	3.864
	-.105	V	3.864
	-.105	V	3.864
	-.105	V	3.864
	-.105	V	3.864
	-.105	V	3.864
	-.105	V	3.864
	-.105	V	3.864
	-.105	V	3.864
	-.105	V	3.864
	-.105	V	3.864
	-.105	V	3.864

¢ 7

Pattern Label	Load (k)	Direction	Distance (in)
6FT_DISTRIB_TANDEM	-.082	V	0
	-.082	V	2.868
	-.082	V	2.868
	-.082	V	2.868
	-.082	V	2.868
	-.082	V	2.868
	-.082	V	2.868
	-.082	V	2.868
	-.082	V	2.868
	-.082	V	2.868
	-.082	V	2.868
	-.082	V	2.868
	-.082	V	2.868
	-.082	V	2.868
	-.082	V	2.868
	-.082	V	2.868
	-.082	V	2.868
	-.082	V	2.868
	-.082	V	2.868
	-.082	V	2.868
	-.082	V	2.868
	-.082	V	2.868
	-.082	V	2.868
	-.082	V	2.868
	-.082	V	2.868
	-.082	V	2.868
	-.082	V	2.868
	-.082	V	2.868
	-.082	V	2.868
	-.082	V	2.868
	-.082	V	2.868
	-.082	V	2.868
	-.082	V	2.868
	-.082	V	2.868
	-.082	V	2.868
	-.082	V	2.868
	-.082	V	2.868
	-.082	V	2.868
	-.082	V	2.868
	-.082	V	2.868
	-.082	V	2.868
	-.082	V	2.868
	-.082	V	2.868
	-.082	V	2.868
	-.082	V	2.868
	-.082	V	2.868
	-.082	V	2.868
	-.082	V	2.868
	-.082	V	2.868
	-.082	V	2.868
	-.082	V	2.868
	-.082	V	2.868
	-.082	V	2.868
	-.082	V	2.868
	-.082	V	2.868
	-.082	V	2.868
	-.082	V	2.868
	-.082	V	2.868
	-.082	V	2.868
	-.082	V	2.868
	-.082	V	2.868
	-.082	V	2.868
	-.082	V	2.868

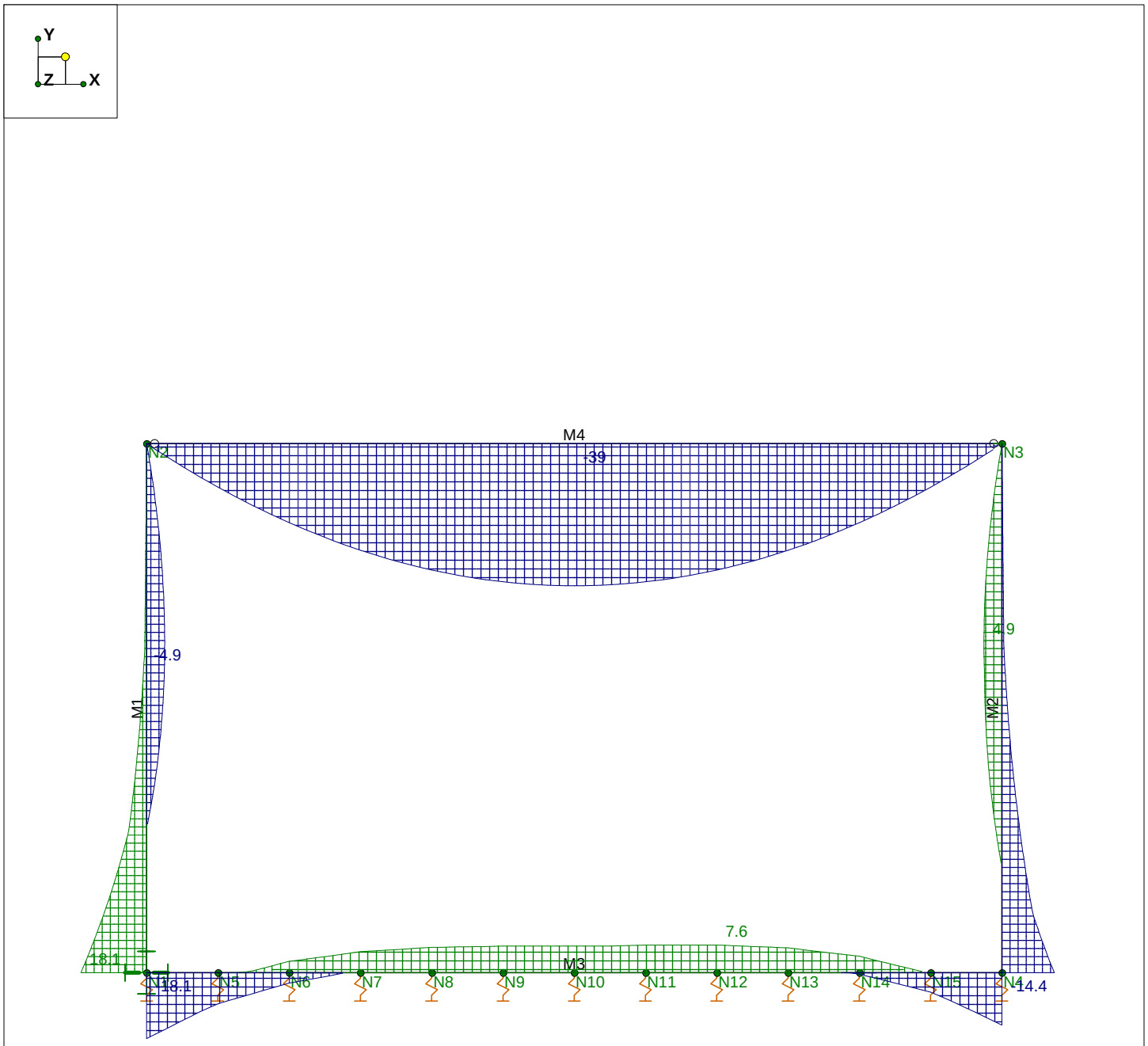

Solution: Envelope
Member z Bending Moments (k-ft)

Renaud		SK - 1
P Lefebvre	12x7 BCwTS - BR52 - In Service Phase - Factored Loa...	Feb 23, 2015 at 5:28 PM
5778	Moment Envelope	12x7 box top_LRFD BR 52 Renau...

MICHIE CORPORATION
173 BUXTON INDUSTRIAL DRIVE; PO BOX 870
HENNIKER, NH 03242
PHONE: 603-428-3218
FAX: 603-428-7426

Re.:

REINFORCING SUMMARY

Customer:	RENAUD
Project:	WINNALL VAOT STP CULV(3)
Location:	BR 52
Project #:	5778
Description:	12x7 BCWTS
Proj. Contact:	

Date: 2/23/15	Designed by: PJL	Checked by:	Date Checked:

Page 1 of 1

- NEOPRENE IN HORIZ. JOINT
- TORCH APPLIED MEMBRANE TO EXTEND 6" MIN BELOW HORIZ. JOINT.

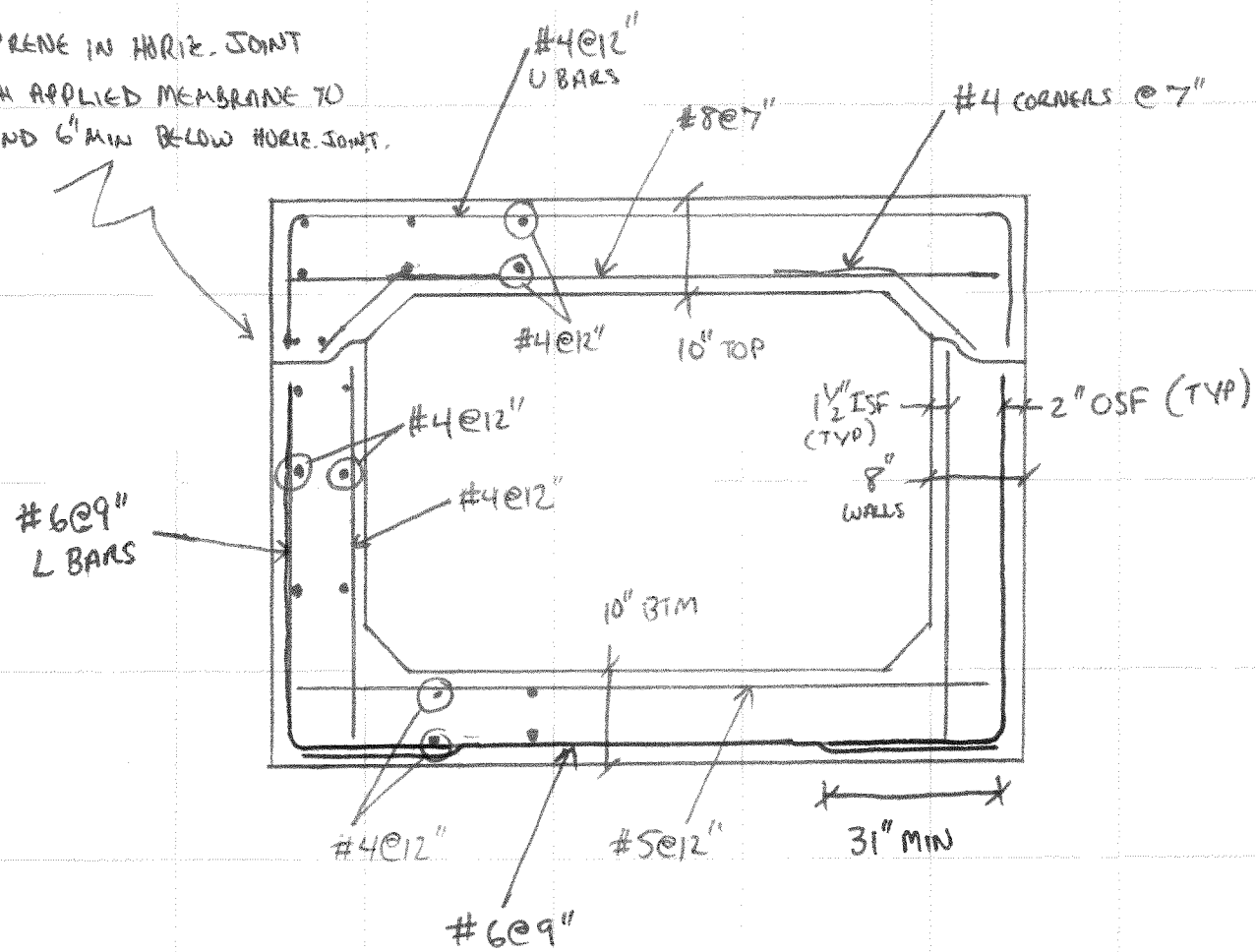

MICHIE CORPORATION
173 BUXTON INDUSTRIAL DRIVE; PO BOX 870
HENNIKER, NH 03242
PHONE: 603-428-3218
FAX: 603-428-7426

Re.:

DESIGN FORCES SUMMARY

(FORCES ARE KIP & KIP-FT)

Customer: RENAUD
Project: WINHALL VT - VAOT STP (LWS)
Location: -BR52-
Project #: 5778
Description: 12X7 BCWTS
Proj. Contact:

Date:	Designed by:	Checked by:	Date Checked:

Page ____ of ____

	LEG OSF (SEC 1-11)	LEG ISF (1-11)	FLOOR OSF (2-12)	FLOOR ISF (2-12)	DECK ISF (2-12)	DEFLECTION
M_S	6.33 (LC3)	2.856 (LC7)	9.115 (LC3)	5.271 (LC9)	27.534 (LC9)	M_{S_DL} = 20.112 (LC4)
N_S	-0.631	-6.604	-3.212	-2.363	-0.161	
M_U	10.326 (LC3)	4.886 (LC7)	15.085 (LC3)	7.628 (LC11)	39.005 (LC9)	
N_U	-0.789	-8.613	-5.123	-5.471	-0.411	
V_U	3.855	0.378	1.106	1.001	0.969	
V_U		5.834 (LC11)		9.684 (LC11)	10.312 (LC9)	
M_{U_RISA}		9.086		8.537	11.922	
N_U		-9.007		-5.471	-0.411	

Company : Renaud
Designer : P Lefebvre
Job Number : 5778

12x7 BCwTS - BR52 - Construction Phase - Service Loads

Feb 23, 2015
4:17 PM
Checked By:_____

Load Combinations

	Description	Solve	PDelta	SRSS	B...	Fa...	B...	Fa...	B...	Fa...	B...	Fa...	B...	Fa...	B...	Fa...	B...	Fa...	B...	Fa...
1	DL	Yes			1	1														
2	Backfill one leg	Yes			1	1	2	1												
3	Backfill two legs + Surcharge two ...	Yes			1	1	2	1	3	1	6	1	7	1						
4	Backfill to FG (Deck Moment)				1	1	2	.5	3	.5	4	.5	5	1						
5	Backfill to FG (Knee Moment)				1	1	2	1	3	1	4	1	5	1						
6	Backfill to FG + LS left leg only				1	1	2	1	3	1	4	1	5	1	6	1				
7	Backfill to FG + LS both legs				1	1	2	1	3	1	4	1	5	1	6	1	7	1		
8	LC#4 + Truck				1	1	2	.5	3	.5	4	.5	5	1	M1	1.0...				
9	LC#4 + Tandem				1	1	2	.5	3	.5	4	.5	5	1	M2	1.0...				
10	LC#6 + Truck				1	1	2	1	3	1	4	1	5	1	6	1	M1	1.0...		
11	LC#6 + Tandem				1	1	2	1	3	1	4	1	5	1	6	1	M2	1.0...		
12	LC#7 + Truck				1	1	2	1	3	1	4	1	5	1	6	1	7	1	M1	1.0...
13	LC#7 + Tandem				1	1	2	1	3	1	4	1	5	1	6	1	7	1	M2	1.0...

Envelope Member Section Forces

	Member	Sec		Axial[k]	LC	y She...	LC	z Shear[...	LC	Torque[k-ft]	LC	y-y Moment[k-...	LC	z-z Moment[...	LC
1	M1	1	max	0	1	0	1	0	1	0	1	0	1	0	1
2			min	0	1	0	1	0	1	0	1	0	1	0	1
3		2	max	.063	3	0	1	0	1	0	1	0	1	.036	3
4			min	.063	2	-.116	3	0	1	0	1	0	1	0	1
5		3	max	.126	3	0	1	0	1	0	1	0	1	.157	3
6			min	.126	2	-.259	3	0	1	0	1	0	1	0	1
7		4	max	.189	3	0	1	0	1	0	1	0	1	.38	3
8			min	.189	2	-.43	3	0	1	0	1	0	1	0	1
9		5	max	.252	3	0	1	0	1	0	1	0	1	.724	3
10			min	.252	2	-.628	3	0	1	0	1	0	1	0	1
11		6	max	.316	3	0	1	0	1	0	1	0	1	1.207	3
12			min	.316	2	-.855	3	0	1	0	1	0	1	0	1
13		7	max	.379	3	0	1	0	1	0	1	0	1	1.846	3
14			min	.379	2	-1.108	3	0	1	0	1	0	1	0	1
15		8	max	.442	3	0	1	0	1	0	1	0	1	2.66	3
16			min	.442	2	-1.39	3	0	1	0	1	0	1	0	1
17		9	max	.505	3	0	1	0	1	0	1	0	1	3.667	3
18			min	.505	2	-1.699	3	0	1	0	1	0	1	0	1
19		10	max	.568	3	0	1	0	1	0	1	0	1	4.884	3
20			min	.568	2	-2.036	3	0	1	0	1	0	1	0	1
21		11	max	.631	3	0	1	0	1	0	1	0	1	6.33	3
22			min	.631	2	-2.4	3	0	1	0	1	0	1	0	1
23		12	max	.694	3	0	1	0	1	0	1	0	1	8.023	3
24			min	.694	2	-2.792	3	0	1	0	1	0	1	0	1
25		13	max	.757	3	0	1	0	1	0	1	0	1	9.981	3
26			min	.757	2	-3.212	3	0	1	0	1	0	1	0	1
27	M2	1	max	0	1	0	1	0	1	0	1	0	1	0	1
28			min	0	1	0	1	0	1	0	1	0	1	0	1
29		2	max	.063	1	.116	3	0	1	0	1	0	1	0	1
30			min	.063	3	0	1	0	1	0	1	0	1	-.036	3
31		3	max	.126	1	.259	3	0	1	0	1	0	1	0	1
32			min	.126	3	0	1	0	1	0	1	0	1	-.157	3
33		4	max	.189	1	.43	3	0	1	0	1	0	1	0	1
34			min	.189	3	0	1	0	1	0	1	0	1	-.38	3
35		5	max	.252	1	.628	3	0	1	0	1	0	1	0	1
36			min	.252	3	0	1	0	1	0	1	0	1	-.724	3
37		6	max	.316	1	.855	3	0	1	0	1	0	1	0	1
38			min	.316	3	0	1	0	1	0	1	0	1	-1.207	3
39		7	max	.379	1	1.108	3	0	1	0	1	0	1	0	1

M_s

Company : Renaud
Designer : P Lefebvre
Job Number : 5778
12x7 BCwTS - BR52 - Construction Phase - Service Loads
Feb 23, 2015
4:17 PM
Checked By:_____

Envelope Member Section Forces (Continued)

	Member	Sec		Axial[k]	LC	y She...	LC	z Shear[...	LC	Torque[k-ft]	LC	y-y Moment[k-...	LC	z-z Moment[...	LC
40			min	.379	3	0	1	0	1	0	1	0	1	-1.846	3
41		8	max	.442	1	1.39	3	0	1	0	1	0	1	0	1
42			min	.442	3	0	1	0	1	0	1	0	1	-2.66	3
43		9	max	.505	1	1.699	3	0	1	0	1	0	1	0	1
44			min	.505	3	0	1	0	1	0	1	0	1	-3.667	3
45		10	max	.568	1	2.036	3	0	1	0	1	0	1	0	1
46			min	.568	3	0	1	0	1	0	1	0	1	-4.884	3
47		11	max	.631	1	2.4	3	0	1	0	1	0	1	0	1
48			min	.631	3	0	1	0	1	0	1	0	1	-6.33	3
49		12	max	.694	1	2.792	3	0	1	0	1	0	1	0	1
50			min	.694	3	0	1	0	1	0	1	0	1	-8.023	3
51		13	max	.757	1	3.212	3	0	1	0	1	0	1	0	1
52			min	.757	3	0	1	0	1	0	1	0	1	-9.981	3
53	M3	1	max	3.212	3	-.302	1	0	1	0	1	0	1	0	1
54			min	0	1	-.757	2	0	1	0	1	0	1	-9.981	3
55		2	max	3.212	3	-.43	1	0	1	0	1	0	1	.386	1
56			min	0	1	-.885	2	0	1	0	1	0	1	-9.115	3
57		3	max	3.212	3	-.21	1	0	1	0	1	0	1	.541	1
58			min	0	1	-1.012	2	0	1	0	1	0	1	-8.114	3
59		4	max	3.212	3	.099	1	0	1	0	1	0	1	.561	1
60			min	0	1	-1.14	3	0	1	0	1	0	1	-6.978	3
61		5	max	3.212	3	.104	1	0	1	0	1	0	1	.524	1
62			min	0	1	-1.267	3	0	1	0	1	0	1	-5.707	3
63		6	max	3.212	3	.08	1	0	1	0	1	0	1	.481	1
64			min	0	1	-.978	3	0	1	0	1	0	1	-4.742	3
65		7	max	3.212	3	-.047	1	0	1	0	1	0	1	.463	1
66			min	0	1	-.582	2	0	1	0	1	0	1	-4.388	3
67		8	max	3.212	3	.978	3	0	1	0	1	0	1	.481	1
68			min	0	1	-.421	2	0	1	0	1	0	1	-4.742	3
69		9	max	3.212	3	1.267	3	0	1	0	1	0	1	.542	2
70			min	0	1	-.286	2	0	1	0	1	0	1	-5.707	3
71		10	max	3.212	3	1.14	3	0	1	0	1	0	1	.65	2
72			min	0	1	-.166	2	0	1	0	1	0	1	-6.978	3
73		11	max	3.212	3	1.012	3	0	1	0	1	0	1	.622	2
74			min	0	1	.21	1	0	1	0	1	0	1	-8.114	3
75		12	max	3.212	3	.885	3	0	1	0	1	0	1	.426	2
76			min	0	1	.43	1	0	1	0	1	0	1	-9.115	3
77		13	max	3.212	3	.757	3	0	1	0	1	0	1	0	1
78			min	0	1	.302	1	0	1	0	1	0	1	-9.981	3

M_s

Envelope Joint Reactions

	Joint		X [k]	LC	Y [k]	LC	Z [k]	LC	MX [k-ft]	LC	MY [k-ft]	LC	MZ [k-ft]	LC
1	N1	max	0	3	.455	1	0	1	0	1	0	1	0	1
2		min	-1.99	2	0	2	0	1	0	1	0	1	0	1
3	N4	max	0	1	.455	1	0	1	0	1	0	1	0	1
4		min	0	1	0	3	0	1	0	1	0	1	0	1
5	N5	max	0	1	.347	1	0	1	0	1	0	1	0	1
6		min	0	1	0	2	0	1	0	1	0	1	0	1
7	N6	max	0	1	.254	1	0	1	0	1	0	1	0	1
8		min	0	1	0	3	0	1	0	1	0	1	0	1
9	N7	max	0	1	.242	2	0	1	0	1	0	1	0	1
10		min	0	1	0	3	0	1	0	1	0	1	0	1
11	N8	max	0	1	.417	3	0	1	0	1	0	1	0	1
12		min	0	1	.133	1	0	1	0	1	0	1	0	1
13	N9	max	0	1	.707	3	0	1	0	1	0	1	0	1
14		min	0	1	.104	1	0	1	0	1	0	1	0	1

Envelope Joint Reactions (Continued)

	Joint		X [k]	LC	Y [k]	LC	Z [k]	LC	MX [k-ft]	LC	MY [k-ft]	LC	MZ [k-ft]	LC
15	N10	max	0	1	.799	3	0	1	0	1	0	1	0	1
16		min	0	1	.094	1	0	1	0	1	0	1	0	1
17	N11	max	0	1	.707	3	0	1	0	1	0	1	0	1
18		min	0	1	.104	1	0	1	0	1	0	1	0	1
19	N12	max	0	1	.417	3	0	1	0	1	0	1	0	1
20		min	0	1	.133	1	0	1	0	1	0	1	0	1
21	N13	max	0	1	.255	2	0	1	0	1	0	1	0	1
22		min	0	1	0	3	0	1	0	1	0	1	0	1
23	N14	max	0	1	.288	2	0	1	0	1	0	1	0	1
24		min	0	1	0	3	0	1	0	1	0	1	0	1
25	N15	max	0	1	.347	1	0	1	0	1	0	1	0	1
26		min	0	1	0	3	0	1	0	1	0	1	0	1
27	Totals:	max	0	3	3.045	1	0	1						
28		min	-1.99	2	3.045	3	0	1						

Company : Renaud
Designer : P Lefebvre
Job Number : 5778
12x7 BCwTS - BR52 - Construction Phase - Service Loads - LC3 Only

Feb 23, 2015
4:53 PM
Checked By:_____

Member Section Forces

	LC	Member Label	Sec	Axial[k]	y Shear[k]	z Shear[k]	Torque[k-ft]	y-y Mo...	z-z Mo...
1	3	M1	1	0	0	0	0	0	0
2			2	.063	-.116	0	0	0	.036
3			3	.126	-.259	0	0	0	.157
4			4	.189	-.43	0	0	0	.38
5			5	.252	-.628	0	0	0	.724
6			6	.316	-.855	0	0	0	1.207
7			7	.379	-1.108	0	0	0	1.846
8			8	.442	-1.39	0	0	0	2.66
9			9	.505	-1.699	0	0	0	3.667
10			10	.568	-2.036	0	0	0	4.884
11			11	.631 N_s	-2.4	0	0	0	6.33
12			12	.694	-2.792	0	0	0	8.023
13			13	.757	-3.212	0	0	0	9.981
14	3	M2	1	0	0	0	0	0	0
15			2	.063	.116	0	0	0	-.036
16			3	.126	.259	0	0	0	-.157
17			4	.189	.43	0	0	0	-.38
18			5	.252	.628	0	0	0	-.724
19			6	.316	.855	0	0	0	-1.207
20			7	.379	1.108	0	0	0	-1.846
21			8	.442	1.39	0	0	0	-2.66
22			9	.505	1.699	0	0	0	-3.667
23			10	.568	2.036	0	0	0	-4.884
24			11	.631	2.4	0	0	0	-6.33
25			12	.694	2.792	0	0	0	-8.023
26			13	.757	3.212	0	0	0	-9.981
27	3	M3	1	3.212	-.757	0	0	0	-9.981
28			2	3.212 N_s	-.885	0	0	0	-9.115
29			3	3.212	-1.012	0	0	0	-8.114
30			4	3.212	-1.14	0	0	0	-6.978
31			5	3.212	-1.267	0	0	0	-5.707
32			6	3.212	-.978	0	0	0	-4.742
33			7	3.212	-.399	0	0	0	-4.388
34			8	3.212	.978	0	0	0	-4.742
35			9	3.212	1.267	0	0	0	-5.707
36			10	3.212	1.14	0	0	0	-6.978
37			11	3.212	1.012	0	0	0	-8.114
38			12	3.212	.885	0	0	0	-9.115
39			13	3.212	.757	0	0	0	-9.981

Company : Renaud
Designer : P Lefebvre
Job Number : 5778

12x7 BCwTS - BR52 - In Service Phase - Service Loads

Feb 23, 2015
4:20 PM
Checked By:_____

Load Combinations

	Description	Solve	PDelta	SRSS	B...	Fa...	B...	Fa...	B...	Fa...	B...	Fa...	B...	Fa...	B...	Fa...	B...	Fa...	B...	Fa...
1	DL	Yes			1	1														
2	Backfill one leg				1	1	2	1												
3	Backfill two legs + Surcharge two ...				1	1	2	1	3	1	6	1	7	1						
4	Backfill to FG (Deck Moment)	Yes			1	1	2	.5	3	.5	4	.5	5	1						
5	Backfill to FG (Knee Moment)	Yes			1	1	2	1	3	1	4	1	5	1						
6	Backfill to FG + LS left leg only	Yes			1	1	2	1	3	1	4	1	5	1	6	1				
7	Backfill to FG + LS both legs	Yes			1	1	2	1	3	1	4	1	5	1	6	1	7	1		
8	LC#4 + Truck	Yes			1	1	2	.5	3	.5	4	.5	5	1	M1	1.0...				
9	LC#4 + Tandem	Yes			1	1	2	.5	3	.5	4	.5	5	1	M2	1.0...				
10	LC#6 + Truck	Yes			1	1	2	1	3	1	4	1	5	1	6	1	M1	1.0...		
11	LC#6 + Tandem	Yes			1	1	2	1	3	1	4	1	5	1	6	1	M2	1.0...		
12	LC#7 + Truck	Yes			1	1	2	1	3	1	4	1	5	1	6	1	7	1	M1	1.0...
13	LC#7 + Tandem	Yes			1	1	2	1	3	1	4	1	5	1	6	1	7	1	M2	1.0...

Envelope Member Section Forces

	Member	Sec		Axial[k]	LC	y She...	LC	z Shear[...	LC	Torque[k-ft]	LC	y-y Moment[k-...	LC	z-z Moment[...	LC
1	M1	1	max	8.723	9	1.95	7	0	1	0	1	0	1	0	1
2			min	.765	1	-.137	1	0	1	0	1	0	1	0	1
3		2	max	8.786	9	1.545	7	0	1	0	1	0	1	.09	1
4			min	.828	1	-.137	1	0	1	0	1	0	1	-1.142	7
5		3	max	8.849	9	1.112	7	0	1	0	1	0	1	.179	1
6			min	.891	1	-.155	9	0	1	0	1	0	1	-2.011	7
7		4	max	8.912	9	.652	7	0	1	0	1	0	1	.269	1
8			min	.955	1	-.335	9	0	1	0	1	0	1	-2.588	7
9		5	max	8.975	9	.165	7	0	1	0	1	0	1	.43	9
10			min	1.018	1	-.528	9	0	1	0	1	0	1	-2.856	7
11		6	max	9.038	9	-.137	1	0	1	0	1	0	1	.841	9
12			min	1.081	1	-.831	11	0	1	0	1	0	1	-2.797	7
13		7	max	9.101	9	-.137	1	0	1	0	1	0	1	1.392	9
14			min	1.144	1	-1.374	11	0	1	0	1	0	1	-2.392	7
15		8	max	9.164	9	-.137	1	0	1	0	1	0	1	2.091	9
16			min	1.207	1	-1.945	11	0	1	0	1	0	1	-1.624	7
17		9	max	9.227	9	-.137	1	0	1	0	1	0	1	2.947	9
18			min	1.27	1	-2.543	11	0	1	0	1	0	1	-.474	7
19		10	max	9.291	9	-.137	1	0	1	0	1	0	1	3.971	9
20			min	1.333	1	-3.169	11	0	1	0	1	0	1	.807	1
21		11	max	9.354	9	-.137	1	0	1	0	1	0	1	6.179	11
22			min	1.396	1	-3.823	11	0	1	0	1	0	1	.896	1
23		12	max	9.417	9	-.137	1	0	1	0	1	0	1	8.896	11
24			min	1.459	1	-4.504	11	0	1	0	1	0	1	.986	1
25		13	max	9.48	9	-.137	1	0	1	0	1	0	1	12.066	11
26			min	1.523	1	-5.213	11	0	1	0	1	0	1	1.076	1
27	M2	1	max	8.723	9	.137	1	0	1	0	1	0	1	0	1
28			min	.765	1	-1.95	7	0	1	0	1	0	1	0	1
29		2	max	8.786	9	.137	1	0	1	0	1	0	1	1.142	7
30			min	.828	1	-1.545	7	0	1	0	1	0	1	-.09	1
31		3	max	8.849	9	.155	9	0	1	0	1	0	1	2.011	7
32			min	.891	1	-1.112	7	0	1	0	1	0	1	-.179	1
33		4	max	8.912	9	.335	9	0	1	0	1	0	1	2.588	7
34			min	.955	1	-.687	6	0	1	0	1	0	1	-.269	1
35		5	max	8.975	9	.528	9	0	1	0	1	0	1	2.856	7
36			min	1.018	1	-.301	6	0	1	0	1	0	1	-.43	9
37		6	max	9.038	9	.734	9	0	1	0	1	0	1	2.797	7
38			min	1.081	1	.112	6	0	1	0	1	0	1	-.841	9
39		7	max	9.101	9	1.104	13	0	1	0	1	0	1	2.53	6

M_5

Company : Renaud
Designer : P Lefebvre
Job Number : 5778
12x7 BCwTS - BR52 - In Service Phase - Service Loads
Feb 23, 2015
4:20 PM
Checked By:_____

Envelope Member Section Forces (Continued)

	Member	Sec		Axial[k]	LC	y She...	LC	z Shear[...	LC	Torque[k-ft]	LC	y-y Moment[k-...	LC	z-z Moment[...	LC
40			min	1.144	1	.137	1	0	1	0	1	0	1	-1.392	9
41		8	max	9.164	9	1.675	13	0	1	0	1	0	1	2.017	6
42			min	1.207	1	.137	1	0	1	0	1	0	1	-2.091	9
43		9	max	9.227	9	2.273	13	0	1	0	1	0	1	1.189	6
44			min	1.27	1	.137	1	0	1	0	1	0	1	-2.947	9
45		10	max	9.291	9	2.899	13	0	1	0	1	0	1	.028	6
46			min	1.333	1	.137	1	0	1	0	1	0	1	-3.971	9
47		11	max	9.354	9	3.552	13	0	1	0	1	0	1	-.896	1
48			min	1.396	1	.137	1	0	1	0	1	0	1	-5.169	9
49		12	max	9.417	9	4.234	13	0	1	0	1	0	1	-.986	1
50			min	1.459	1	.137	1	0	1	0	1	0	1	-6.954	13
51		13	max	9.48	9	4.942	13	0	1	0	1	0	1	-1.076	1
52			min	1.522	1	.137	1	0	1	0	1	0	1	-9.947	13
53	M3	1	max	4.942	13	-.867	1	0	1	0	1	0	1	-1.076	1
54			min	.137	1	-6.661	11	0	1	0	1	0	1	-12.066	11
55		2	max	4.942	13	-.994	1	0	1	0	1	0	1	-.094	1
56			min	.137	1	-6.789	11	0	1	0	1	0	1	-5.308	11
57		3	max	4.942	13	-.591	1	0	1	0	1	0	1	2.313	9
58			min	.137	1	-4.448	11	0	1	0	1	0	1	-1.284	11
59		4	max	4.942	13	-.318	1	0	1	0	1	0	1	4.2	9
60			min	.137	1	-2.691	11	0	1	0	1	0	1	.731	1
61		5	max	4.942	13	-.16	1	0	1	0	1	0	1	5.005	9
62			min	.137	1	-1.569	11	0	1	0	1	0	1	.832	1
63		6	max	4.942	13	-.087	1	0	1	0	1	0	1	5.244	9
64			min	.137	1	-.961	11	0	1	0	1	0	1	.856	1
65		7	max	4.942	13	.34	13	0	1	0	1	0	1	5.271	9
66			min	.137	1	-.639	11	0	1	0	1	0	1	.858	1
67		8	max	4.942	13	.646	13	0	1	0	1	0	1	5.362	11
68			min	.137	1	-.425	11	0	1	0	1	0	1	.856	1
69		9	max	4.942	13	1.213	13	0	1	0	1	0	1	5.32	11
70			min	.137	1	.16	1	0	1	0	1	0	1	.832	1
71		10	max	4.942	13	2.298	13	0	1	0	1	0	1	4.676	11
72			min	.137	1	.318	1	0	1	0	1	0	1	.731	1
73		11	max	4.942	13	4.06	13	0	1	0	1	0	1	2.934	11
74			min	.137	1	.591	1	0	1	0	1	0	1	.127	13
75		12	max	4.942	13	6.507	13	0	1	0	1	0	1	-.094	1
76			min	.137	1	.994	1	0	1	0	1	0	1	-3.487	13
77		13	max	4.942	13	6.379	13	0	1	0	1	0	1	-1.076	1
78			min	.137	1	.867	1	0	1	0	1	0	1	-9.947	13
79	M4	1	max	1.95	7	8.723	9	0	1	0	1	0	1	0	1
80			min	-.137	1	.765	1	0	1	0	1	0	1	0	1
81		2	max	1.95	7	7.273	9	0	1	0	1	0	1	-.74	1
82			min	-.137	1	.638	1	0	1	0	1	0	1	-8.416	9
83		3	max	1.95	7	5.888	9	0	1	0	1	0	1	-1.346	1
84			min	-.137	1	.51	1	0	1	0	1	0	1	-15.301	9
85		4	max	1.95	7	4.499	9	0	1	0	1	0	1	-1.818	1
86			min	-.137	1	.383	1	0	1	0	1	0	1	-20.658	9
87		5	max	1.95	7	3.176	9	0	1	0	1	0	1	-2.154	1
88			min	-.137	1	.255	1	0	1	0	1	0	1	-24.48	9
89		6	max	1.95	7	1.883	9	0	1	0	1	0	1	-2.356	1
90			min	-.137	1	.128	1	0	1	0	1	0	1	-26.774	9
91		7	max	1.95	7	.554	9	0	1	0	1	0	1	-2.423	1
92			min	-.137	1	-.554	9	0	1	0	1	0	1	-27.534	9
93		8	max	1.95	7	-.128	1	0	1	0	1	0	1	-2.356	1
94			min	-.137	1	-1.883	9	0	1	0	1	0	1	-26.774	9
95		9	max	1.95	7	-.255	1	0	1	0	1	0	1	-2.154	1
96			min	-.137	1	-3.176	9	0	1	0	1	0	1	-24.48	9

M_s

M_s

Envelope Member Section Forces (Continued)

	Member	Sec		Axial[k]	LC	y She...	LC	z Shear[...	LC	Torque[k-ft]	LC	y-y Moment[k-...	LC	z-z Moment[...	LC
97		10	max	1.95	7	-.383	1	0	1	0	1	0	1	-1.818	1
98			min	-.137	1	-4.499	9	0	1	0	1	0	1	-20.658	9
99		11	max	1.95	7	-.51	1	0	1	0	1	0	1	-1.346	1
100			min	-.137	1	-5.888	9	0	1	0	1	0	1	-15.301	9
101		12	max	1.95	7	-.638	1	0	1	0	1	0	1	-.74	1
102			min	-.137	1	-7.273	9	0	1	0	1	0	1	-8.416	9
103		13	max	1.95	7	-.765	1	0	1	0	1	0	1	0	1
104			min	-.137	1	-8.723	9	0	1	0	1	0	1	0	1

Envelope Joint Reactions

	Joint		X [k]	LC	Y [k]	LC	Z [k]	LC	MX [k-ft]	LC	MY [k-ft]	LC	MZ [k-ft]	LC
1	N1	max	0	12	3.38	9	0	1	0	1	0	1	0	1
2		min	-1.222	10	.656	1	0	1	0	1	0	1	0	1
3	N4	max	0	1	3.47	11	0	1	0	1	0	1	0	1
4		min	0	1	.656	1	0	1	0	1	0	1	0	1
5	N5	max	0	1	2.678	9	0	1	0	1	0	1	0	1
6		min	0	1	.531	1	0	1	0	1	0	1	0	1
7	N6	max	0	1	1.909	13	0	1	0	1	0	1	0	1
8		min	0	1	.4	1	0	1	0	1	0	1	0	1
9	N7	max	0	1	1.317	11	0	1	0	1	0	1	0	1
10		min	0	1	.286	1	0	1	0	1	0	1	0	1
11	N8	max	0	1	.824	11	0	1	0	1	0	1	0	1
12		min	0	1	.201	1	0	1	0	1	0	1	0	1
13	N9	max	0	1	.489	11	0	1	0	1	0	1	0	1
14		min	0	1	.149	1	0	1	0	1	0	1	0	1
15	N10	max	0	1	.362	13	0	1	0	1	0	1	0	1
16		min	0	1	.131	1	0	1	0	1	0	1	0	1
17	N11	max	0	1	.473	13	0	1	0	1	0	1	0	1
18		min	0	1	.149	1	0	1	0	1	0	1	0	1
19	N12	max	0	1	.784	13	0	1	0	1	0	1	0	1
20		min	0	1	.201	1	0	1	0	1	0	1	0	1
21	N13	max	0	1	1.279	13	0	1	0	1	0	1	0	1
22		min	0	1	.286	1	0	1	0	1	0	1	0	1
23	N14	max	0	1	1.911	11	0	1	0	1	0	1	0	1
24		min	0	1	.4	1	0	1	0	1	0	1	0	1
25	N15	max	0	1	2.714	11	0	1	0	1	0	1	0	1
26		min	0	1	.531	1	0	1	0	1	0	1	0	1
27	Totals:	max	0	12	20.188	9	0	1						
28		min	-1.222	10	4.576	1	0	1						

Company : Renaud
Designer : P Lefebvre
Job Number : 5778
12x7 BCwTS - BR52 - In Service Phase - Service Loads - LC7 Only

Feb 23, 2015
4:52 PM
Checked By:_____

Member Section Forces

	LC	Member Label	Sec	Axial[k]	y Shear[k]	z Shear[k]	Torque[k-ft]	y-y Mo...	z-z Mo...
1	7	M1	1	6.351	1.95	0	0	0	0
2			2	6.414	1.545	0	0	0	-1.142
3			3	6.477	1.112	0	0	0	-2.011
4			4	6.541	.652	0	0	0	-2.588
5			5	6.604 N_s	.165	0	0	0	-2.856
6			6	6.667	-.351	0	0	0	-2.797
7			7	6.73	-.894	0	0	0	-2.392
8			8	6.793	-1.464	0	0	0	-1.624
9			9	6.856	-2.063	0	0	0	-.474
10			10	6.919	-2.689	0	0	0	1.075
11			11	6.982	-3.342	0	0	0	3.042
12			12	7.045	-4.023	0	0	0	5.444
13			13	7.108	-4.732	0	0	0	8.301
14	7	M2	1	6.351	-1.95	0	0	0	0
15			2	6.414	-1.545	0	0	0	1.142
16			3	6.477	-1.112	0	0	0	2.011
17			4	6.541	-.652	0	0	0	2.588
18			5	6.604	-.165	0	0	0	2.856
19			6	6.667	.351	0	0	0	2.797
20			7	6.73	.894	0	0	0	2.392
21			8	6.793	1.464	0	0	0	1.624
22			9	6.856	2.063	0	0	0	.474
23			10	6.919	2.689	0	0	0	-1.075
24			11	6.982	3.342	0	0	0	-3.042
25			12	7.045	4.023	0	0	0	-5.444
26			13	7.108	4.732	0	0	0	-8.301
27	7	M3	1	4.732	-4.891	0	0	0	-8.301
28			2	4.732	-5.018	0	0	0	-3.071
29			3	4.732	-3.24	0	0	0	.282
30			4	4.732	-1.908	0	0	0	2.228
31			5	4.732	-1.019	0	0	0	3.236
32			6	4.732	-.485	0	0	0	3.682
33			7	4.732	-.179	0	0	0	3.803
34			8	4.732	.485	0	0	0	3.682
35			9	4.732	1.019	0	0	0	3.236
36			10	4.732	1.908	0	0	0	2.228
37			11	4.732	3.24	0	0	0	.282
38			12	4.732	5.018	0	0	0	-3.071
39			13	4.732	4.891	0	0	0	-8.301
40	7	M4	1	1.95	6.351	0	0	0	0
41			2	1.95	5.293	0	0	0	-6.145
42			3	1.95	4.234	0	0	0	-11.174
43			4	1.95	3.176	0	0	0	-15.084
44			5	1.95	2.117	0	0	0	-17.878
45			6	1.95	1.059	0	0	0	-19.554
46			7	1.95	0	0	0	0	-20.112
47			8	1.95	-1.059	0	0	0	-19.554
48			9	1.95	-2.117	0	0	0	-17.878
49			10	1.95	-3.176	0	0	0	-15.084
50			11	1.95	-4.234	0	0	0	-11.174
51			12	1.95	-5.293	0	0	0	-6.145
52			13	1.95	-6.351	0	0	0	0

Company : Renaud
Designer : P Lefebvre
Job Number : 5778

12x7 BCwTS - BR52 - In Service Phase - Service Loads - LC9 Only

Feb 23, 2015
4:53 PM
Checked By:_____

Envelope Member Section Forces

	Member	Sec		Axial[k]	LC	y She...	LC	z Shear[...	LC	Torque[k-ft]	LC	y-y Moment[k-...	LC	z-z Moment[...	LC
1	M1	1	max	8.723	9	.367	9	0	9	0	9	0	9	0	9
2			min	6.351	9	.161	9	0	9	0	9	0	9	0	9
3		2	max	8.786	9	.216	9	0	9	0	9	0	9	-.057	9
4			min	6.414	9	.01	9	0	9	0	9	0	9	-.191	9
5		3	max	8.849	9	.051	9	0	9	0	9	0	9	-.01	9
6			min	6.477	9	-.155	9	0	9	0	9	0	9	-.279	9
7		4	max	8.912	9	-.129	9	0	9	0	9	0	9	.149	9
8			min	6.541	9	-.335	9	0	9	0	9	0	9	-.254	9
9		5	max	8.975	9	-.322	9	0	9	0	9	0	9	.43	9
10			min	6.604	9	-.528	9	0	9	0	9	0	9	-.108	9
11		6	max	9.038	9	-.528	9	0	9	0	9	0	9	.841	9
12			min	6.667	9	-.734	9	0	9	0	9	0	9	.169	9
13		7	max	9.101	9	-.749	9	0	9	0	9	0	9	1.392	9
14			min	6.73	9	-.955	9	0	9	0	9	0	9	.585	9
15		8	max	9.164	9	-.983	9	0	9	0	9	0	9	2.091	9
16			min	6.793	9	-1.189	9	0	9	0	9	0	9	1.15	9
17		9	max	9.227	9	-1.232	9	0	9	0	9	0	9	2.947	9
18			min	6.856	9	-1.438	9	0	9	0	9	0	9	1.872	9
19		10	max	9.291	9	-1.494	9	0	9	0	9	0	9	3.971	9
20			min	6.919	9	-1.7	9	0	9	0	9	0	9	2.76	9
21		11	max	9.354	9	-1.769	9	0	9	0	9	0	9	5.169	9
22			min	6.982	9	-1.975	9	0	9	0	9	0	9	3.825	9
23		12	max	9.417	9	-2.059	9	0	9	0	9	0	9	6.553	9
24			min	7.045	9	-2.265	9	0	9	0	9	0	9	5.074	9
25		13	max	9.48	9	-2.363	9	0	9	0	9	0	9	8.13	9
26			min	7.108	9	-2.569	9	0	9	0	9	0	9	6.516	9
27	M2	1	max	8.723	9	-.161	9	0	9	0	9	0	9	0	9
28			min	6.351	9	-.367	9	0	9	0	9	0	9	0	9
29		2	max	8.786	9	-.01	9	0	9	0	9	0	9	.191	9
30			min	6.414	9	-.216	9	0	9	0	9	0	9	.057	9
31		3	max	8.849	9	.155	9	0	9	0	9	0	9	.279	9
32			min	6.477	9	-.051	9	0	9	0	9	0	9	.01	9
33		4	max	8.912	9	.335	9	0	9	0	9	0	9	.254	9
34			min	6.541	9	.129	9	0	9	0	9	0	9	-.149	9
35		5	max	8.975	9	.528	9	0	9	0	9	0	9	.108	9
36			min	6.604	9	.322	9	0	9	0	9	0	9	-.43	9
37		6	max	9.038	9	.734	9	0	9	0	9	0	9	-.169	9
38			min	6.667	9	.528	9	0	9	0	9	0	9	-.841	9
39		7	max	9.101	9	.955	9	0	9	0	9	0	9	-.585	9
40			min	6.73	9	.749	9	0	9	0	9	0	9	-1.392	9
41		8	max	9.164	9	1.189	9	0	9	0	9	0	9	-1.15	9
42			min	6.793	9	.983	9	0	9	0	9	0	9	-2.091	9
43		9	max	9.227	9	1.438	9	0	9	0	9	0	9	-1.872	9
44			min	6.856	9	1.232	9	0	9	0	9	0	9	-2.947	9
45		10	max	9.291	9	1.7	9	0	9	0	9	0	9	-2.76	9
46			min	6.919	9	1.494	9	0	9	0	9	0	9	-3.971	9
47		11	max	9.354	9	1.975	9	0	9	0	9	0	9	-3.825	9
48			min	6.982	9	1.769	9	0	9	0	9	0	9	-5.169	9
49		12	max	9.417	9	2.265	9	0	9	0	9	0	9	-5.074	9
50			min	7.045	9	2.059	9	0	9	0	9	0	9	-6.553	9
51		13	max	9.48	9	2.569	9	0	9	0	9	0	9	-6.516	9
52			min	7.108	9	2.363	9	0	9	0	9	0	9	-8.13	9
53	M3	1	max	2.569	9	-4.622	9	0	9	0	9	0	9	-6.516	9
54			min	2.363	9	-6.105	9	0	9	0	9	0	9	-8.13	9
55		2	max	2.569	9	-4.75	9	0	9	0	9	0	9	-1.284	9
56			min	2.363	9	-6.233	9	0	9	0	9	0	9	-1.959	9

Company : Renaud
Designer : P Lefebvre
Job Number : 5778
12x7 BCwTS - BR52 - In Service Phase - Service Loads - LC9 Only

Feb 23, 2015
4:53 PM
Checked By:_____

Envelope Member Section Forces (Continued)

	Member	Sec		Axial[k]	LC	y She...	LC	z Shear[...	LC	Torque[k-ft]	LC	y-y Moment[k-...	LC	z-z Moment[...	LC
57		3	max	2.569	9	-2.873	9	0	9	0	9	0	9	2.313	9
58			min	2.363	9	-3.685	9	0	9	0	9	0	9	1.26	9
59		4	max	2.569	9	-1.549	9	0	9	0	9	0	9	4.2	9
60			min	2.363	9	-1.932	9	0	9	0	9	0	9	2.937	9
61		5	max	2.569	9	-.689	9	0	9	0	9	0	9	5.005	9
62			min	2.363	9	-.922	9	0	9	0	9	0	9	3.677	9
63		6	max	2.569	9	-.175	9	0	9	0	9	0	9	5.244	9
64			min	2.363	9	-.462	9	0	9	0	9	0	9	3.939	9
65		7	max	2.569	9	.277	9	0	9	0	9	0	9	5.271	9
66			min	2.363	9	-.277	9	0	9	0	9	0	9	4.007	9
67		8	max	2.569	9	.462	9	0	9	0	9	0	9	5.244	9
68			min	2.363	9	.175	9	0	9	0	9	0	9	3.939	9
69		9	max	2.569	9	.922	9	0	9	0	9	0	9	5.005	9
70			min	2.363	9	.689	9	0	9	0	9	0	9	3.677	9
71		10	max	2.569	9	1.932	9	0	9	0	9	0	9	4.2	9
72			min	2.363	9	1.549	9	0	9	0	9	0	9	2.937	9
73		11	max	2.569	9	3.685	9	0	9	0	9	0	9	2.313	9
74			min	2.363	9	2.873	9	0	9	0	9	0	9	1.26	9
75		12	max	2.569	9	6.233	9	0	9	0	9	0	9	-1.284	9
76			min	2.363	9	4.75	9	0	9	0	9	0	9	-1.959	9
77		13	max	2.569	9	6.105	9	0	9	0	9	0	9	-6.516	9
78			min	2.363	9	4.622	9	0	9	0	9	0	9	-8.13	9
79	M4	1	max	.367	9	8.723	9	0	9	0	9	0	9	0	9
80			min	.161	9	6.351	9	0	9	0	9	0	9	0	9
81		2	max	.367	9	7.273	9	0	9	0	9	0	9	-6.145	9
82			min	.161	9	5.274	9	0	9	0	9	0	9	-8.416	9
83		3	max	.367	9	5.888	9	0	9	0	9	0	9	-11.174	9
84			min	.161	9	4.168	9	0	9	0	9	0	9	-15.301	9
85		4	max	.367	9	4.499	9	0	9	0	9	0	9	-15.084	9
86			min	.161	9	3.033	9	0	9	0	9	0	9	-20.658	9
87		5	max	.367	9	3.176	9	0	9	0	9	0	9	-17.878	9
88			min	.161	9	1.868	9	0	9	0	9	0	9	-24.48	9
89		6	max	.367	9	1.883	9	0	9	0	9	0	9	-19.554	9
90			min	.161	9	.674	9	0	9	0	9	0	9	-26.774	9
91		7	max	.367	9	.554	9	0	9	0	9	0	9	-20.112	9
92			min	.161	9	-.554	9	0	9	0	9	0	9	-27.534	9
93		8	max	.367	9	-.674	9	0	9	0	9	0	9	-19.554	9
94			min	.161	9	-1.883	9	0	9	0	9	0	9	-26.774	9
95		9	max	.367	9	-1.868	9	0	9	0	9	0	9	-17.878	9
96			min	.161	9	-3.176	9	0	9	0	9	0	9	-24.48	9
97		10	max	.367	9	-3.033	9	0	9	0	9	0	9	-15.084	9
98			min	.161	9	-4.499	9	0	9	0	9	0	9	-20.658	9
99		11	max	.367	9	-4.168	9	0	9	0	9	0	9	-11.174	9
100			min	.161	9	-5.888	9	0	9	0	9	0	9	-15.301	9
101		12	max	.367	9	-5.274	9	0	9	0	9	0	9	-6.145	9
102			min	.161	9	-7.273	9	0	9	0	9	0	9	-8.416	9
103		13	max	.367	9	-6.351	9	0	9	0	9	0	9	0	9
104			min	.161	9	-8.723	9	0	9	0	9	0	9	0	9

Company : Renaud
Designer : P Lefebvre
Job Number : 5778

12x7 BCwTS - BR52 - In Service Phase - Service Loads - LC4 Only

Feb 23, 2015
4:59 PM
Checked By:_____

Member Section Forces

	LC	Member Label	Sec	Axial[k]	y Shear[k]	z Shear[k]	Torque[k-ft]	y-y Mo...	z-z Mo...
1	4	M1	1	6.351	.372	0	0	0	0
2			2	6.414	.22	0	0	0	-.194
3			3	6.477	.055	0	0	0	-.284
4			4	6.541	-.124	0	0	0	-.262
5			5	6.604	-.317	0	0	0	-.119
6			6	6.667	-.524	0	0	0	.155
7			7	6.73	-.745	0	0	0	.568
8			8	6.793	-.979	0	0	0	1.13
9			9	6.856	-1.227	0	0	0	1.85
10			10	6.919	-1.489	0	0	0	2.736
11			11	6.982	-1.765	0	0	0	3.797
12			12	7.045	-2.055	0	0	0	5.043
13			13	7.108	-2.358	0	0	0	6.483
14	4	M2	1	6.351	-.372	0	0	0	0
15			2	6.414	-.22	0	0	0	.194
16			3	6.477	-.055	0	0	0	.284
17			4	6.541	.124	0	0	0	.262
18			5	6.604	.317	0	0	0	.119
19			6	6.667	.524	0	0	0	-.155
20			7	6.73	.745	0	0	0	-.568
21			8	6.793	.979	0	0	0	-1.13
22			9	6.856	1.227	0	0	0	-1.85
23			10	6.919	1.489	0	0	0	-2.736
24			11	6.982	1.765	0	0	0	-3.797
25			12	7.045	2.055	0	0	0	-5.043
26			13	7.108	2.358	0	0	0	-6.483
27	4	M3	1	2.358	-4.617	0	0	0	-6.483
28			2	2.358	-4.744	0	0	0	-1.542
29			3	2.358	-2.865	0	0	0	1.414
30			4	2.358	-1.543	0	0	0	2.975
31			5	2.358	-.727	0	0	0	3.675
32			6	2.358	-.301	0	0	0	3.926
33			7	2.358	-.116	0	0	0	3.981
34			8	2.358	.301	0	0	0	3.926
35			9	2.358	.727	0	0	0	3.675
36			10	2.358	1.543	0	0	0	2.975
37			11	2.358	2.865	0	0	0	1.414
38			12	2.358	4.744	0	0	0	-1.542
39			13	2.358	4.617	0	0	0	-6.483
40	4	M4	1	.372	6.351	0	0	0	0
41			2	.372	5.293	0	0	0	-6.145
42			3	.372	4.234	0	0	0	-11.174
43			4	.372	3.176	0	0	0	-15.084
44			5	.372	2.117	0	0	0	-17.878
45			6	.372	1.059	0	0	0	-19.554
46			7	.372	0	0	0	0	-20.112
47			8	.372	-1.059	0	0	0	-19.554
48			9	.372	-2.117	0	0	0	-17.878
49			10	.372	-3.176	0	0	0	-15.084
50			11	.372	-4.234	0	0	0	-11.174
51			12	.372	-5.293	0	0	0	-6.145
52			13	.372	-6.351	0	0	0	0

M_{s_DL}

Company : Renaud
Designer : P Lefebvre
Job Number : 5778

12x7 BCwTS - BR52 - Construction Phase - Factored Loads

Feb 23, 2015
4:17 PM
Checked By:_____

Load Combinations

	Description	Solve	PDelta	SRSS	B...	Fa...	B...	Fa...	B...	Fa...	B...	Fa...	B...	Fa...	B...	Fa...	B...	Fa...	B...	Fa...
1	DL	Yes			1	1.25														
2	Backfill one leg	Yes			1	1.25	2	1.5												
3	Backfill two legs + Surcharge two ...	Yes			1	1.25	2	1.5	3	1.5	6	1.75	7	1.75						
4	Backfill to FG (Deck Moment)				1	1.25	2	.9	3	.9	4	.75	5	1.3						
5	Backfill to FG (Knee Moment)				1	1.25	2	1.5	3	1.5	4	1.5	5	1.3						
6	Backfill to FG + LS left leg only				1	1.25	2	1.5	3	1.5	4	1.5	5	1.3	6	1.75				
7	Backfill to FG + LS both legs				1	1.25	2	1.5	3	1.5	4	1.5	5	1.3	6	1.75	7	1.75		
8	LC#4 + Truck				1	1.25	2	.9	3	.9	4	.75	5	1.3	M1	1.8...				
9	LC#4 + Tandem				1	1.25	2	.9	3	.9	4	.75	5	1.3	M2	1.8...				
10	LC#6 + Truck				1	1.25	2	1.5	3	1.5	4	1.5	5	1.3	6	1.75	M1	1.8...		
11	LC#6 + Tandem				1	1.25	2	1.5	3	1.5	4	1.5	5	1.3	6	1.75	M2	1.8...		
12	LC#7 + Truck				1	1.25	2	1.5	3	1.5	4	1.5	5	1.3	6	1.75	7	1.75	M1	1.8...
13	LC#7 + Tandem				1	1.25	2	1.5	3	1.5	4	1.5	5	1.3	6	1.75	7	1.75	M2	1.8...
14	Strength II																			
15	Backfill to FG + LS left leg only				1	1.25	2	1.5	3	1.5	4	1.5	5	1.3	6	1.35				
16	Backfill to FG + LS both legs				1	1.25	2	1.5	3	1.5	4	1.5	5	1.3	6	1.35	7	1.35		
17	LC#4 + Truck				1	1.25	2	.9	3	.9	4	.75	5	1.3	M1	1.4...				
18	LC#4 + Tandem				1	1.25	2	.9	3	.9	4	.75	5	1.3	M2	1.4...				
19	LC#15 + Truck				1	1.25	2	1.5	3	1.5	4	1.5	5	1.3	6	1.35	M1	1.4...		
20	LC#15 + Tandem				1	1.25	2	1.5	3	1.5	4	1.5	5	1.3	6	1.35	M2	1.4...		
21	LC#16 + Truck				1	1.25	2	1.5	3	1.5	4	1.5	5	1.3	6	1.35	7	1.35	M1	1.4...
22	LC#16 + Tandem				1	1.25	2	1.5	3	1.5	4	1.5	5	1.3	6	1.35	7	1.35	M2	1.4...

Envelope Member Section Forces

	Member	Sec		Axial[k]	LC	y She...	LC	z Shear[...	LC	Torque[k-ft]	LC	y-y Moment[k-...	LC	z-z Moment[...	LC
1	M1	1	max	0	1	0	1	0	1	0	1	0	1	0	1
2			min	0	1	0	1	0	1	0	1	0	1	0	1
3		2	max	.079	3	0	1	0	1	0	1	0	1	.063	3
4			min	.079	1	-.199	3	0	1	0	1	0	1	0	1
5		3	max	.158	3	0	1	0	1	0	1	0	1	.269	3
6			min	.158	1	-.439	3	0	1	0	1	0	1	0	1
7		4	max	.237	3	0	1	0	1	0	1	0	1	.645	3
8			min	.237	1	-.721	3	0	1	0	1	0	1	0	1
9		5	max	.316	3	0	1	0	1	0	1	0	1	1.219	3
10			min	.316	1	-1.044	3	0	1	0	1	0	1	0	1
11		6	max	.394	3	0	1	0	1	0	1	0	1	2.018	3
12			min	.394	1	-1.409	3	0	1	0	1	0	1	0	1
13		7	max	.473	3	0	1	0	1	0	1	0	1	3.068	3
14			min	.473	1	-1.815	3	0	1	0	1	0	1	0	1
15		8	max	.552	3	0	1	0	1	0	1	0	1	4.397	3
16			min	.552	1	-2.263	3	0	1	0	1	0	1	0	1
17		9	max	.631	3	0	1	0	1	0	1	0	1	6.032	3
18			min	.631	1	-2.752	3	0	1	0	1	0	1	0	1
19		10	max	.71	3	0	1	0	1	0	1	0	1	7.999	3
20			min	.71	1	-3.283	3	0	1	0	1	0	1	0	1
21		11	max	.789	3	0	1	0	1	0	1	0	1	10.326	3
22			min	.789	1	-3.855	3	0	1	0	1	0	1	0	1
23		12	max	.868	3	0	1	0	1	0	1	0	1	13.04	3
24			min	.868	1	-4.468	3	0	1	0	1	0	1	0	1
25		13	max	.947	3	0	1	0	1	0	1	0	1	16.169	3
26			min	.947	1	-5.123	3	0	1	0	1	0	1	0	1
27	M2	1	max	0	1	0	1	0	1	0	1	0	1	0	1
28			min	0	1	0	1	0	1	0	1	0	1	0	1
29		2	max	.079	3	.199	3	0	1	0	1	0	1	0	1
30			min	.079	1	0	1	0	1	0	1	0	1	-.063	3

Mu

Envelope Member Section Forces (Continued)

	Member	Sec		Axial[k]	LC	y She...	LC	z Shear[...	LC	Torque[k-ft]	LC	y-y Moment[k-...	LC	z-z Moment[...	LC
31		3	max	.158	3	.439	3	0	1	0	1	0	1	0	1
32			min	.158	1	0	1	0	1	0	1	0	1	-.269	3
33		4	max	.237	3	.721	3	0	1	0	1	0	1	0	1
34			min	.237	1	0	1	0	1	0	1	0	1	-.645	3
35		5	max	.316	3	1.044	3	0	1	0	1	0	1	0	1
36			min	.316	1	0	1	0	1	0	1	0	1	-1.219	3
37		6	max	.394	3	1.409	3	0	1	0	1	0	1	0	1
38			min	.394	1	0	1	0	1	0	1	0	1	-2.018	3
39		7	max	.473	3	1.815	3	0	1	0	1	0	1	0	1
40			min	.473	1	0	1	0	1	0	1	0	1	-3.068	3
41		8	max	.552	3	2.263	3	0	1	0	1	0	1	0	1
42			min	.552	1	0	1	0	1	0	1	0	1	-4.397	3
43		9	max	.631	3	2.752	3	0	1	0	1	0	1	0	1
44			min	.631	1	0	1	0	1	0	1	0	1	-6.032	3
45		10	max	.71	3	3.283	3	0	1	0	1	0	1	0	1
46			min	.71	1	0	1	0	1	0	1	0	1	-7.999	3
47		11	max	.789	3	3.855	3	0	1	0	1	0	1	0	1
48			min	.789	1	0	1	0	1	0	1	0	1	-10.326	3
49		12	max	.868	3	4.468	3	0	1	0	1	0	1	0	1
50			min	.868	1	0	1	0	1	0	1	0	1	-13.04	3
51		13	max	.947	3	5.123	3	0	1	0	1	0	1	0	1
52			min	.947	1	0	1	0	1	0	1	0	1	-16.169	3
53	M3	1	max	5.123	3	-.378	1	0	1	0	1	0	1	0	1
54			min	0	1	-.947	2	0	1	0	1	0	1	-16.169	3
55		2	max	5.123	3	-.537	1	0	1	0	1	0	1	.483	1
56			min	0	1	-1.106	2	0	1	0	1	0	1	-15.085	3
57		3	max	5.123	3	-.262	1	0	1	0	1	0	1	.676	1
58			min	0	1	-1.265	2	0	1	0	1	0	1	-13.834	3
59		4	max	5.123	3	.124	1	0	1	0	1	0	1	.701	1
60			min	0	1	-1.425	2	0	1	0	1	0	1	-12.414	3
61		5	max	5.123	3	.13	1	0	1	0	1	0	1	.654	1
62			min	0	1	-1.584	3	0	1	0	1	0	1	-10.826	3
63		6	max	5.123	3	.1	1	0	1	0	1	0	1	.601	1
64			min	0	1	-1.367	3	0	1	0	1	0	1	-9.467	3
65		7	max	5.123	3	-.059	1	0	1	0	1	0	1	.579	1
66			min	0	1	-.954	2	0	1	0	1	0	1	-8.948	3
67		8	max	5.123	3	1.367	3	0	1	0	1	0	1	.601	1
68			min	0	1	-.705	2	0	1	0	1	0	1	-9.467	3
69		9	max	5.123	3	1.584	3	0	1	0	1	0	1	.654	1
70			min	0	1	-.482	2	0	1	0	1	0	1	-10.826	3
71		10	max	5.123	3	1.425	3	0	1	0	1	0	1	.764	2
72			min	0	1	-.281	2	0	1	0	1	0	1	-12.414	3
73		11	max	5.123	3	1.265	3	0	1	0	1	0	1	.768	2
74			min	0	1	.262	1	0	1	0	1	0	1	-13.834	3
75		12	max	5.123	3	1.106	3	0	1	0	1	0	1	.534	2
76			min	0	1	.537	1	0	1	0	1	0	1	-15.085	3
77		13	max	5.123	3	.947	3	0	1	0	1	0	1	0	1
78			min	0	1	.378	1	0	1	0	1	0	1	-16.169	3

M_u

Envelope Joint Reactions

	Joint		X [k]	LC	Y [k]	LC	Z [k]	LC	MX [k-ft]	LC	MY [k-ft]	LC	MZ [k-ft]	LC
1	N1	max	0	3	.569	1	0	1	0	1	0	1	0	1
2		min	-2.985	2	0	2	0	1	0	1	0	1	0	1
3	N4	max	0	1	.569	1	0	1	0	1	0	1	0	1
4		min	0	1	0	3	0	1	0	1	0	1	0	1
5	N5	max	0	1	.434	1	0	1	0	1	0	1	0	1

Envelope Joint Reactions (Continued)

	Joint		X [k]	LC	Y [k]	LC	Z [k]	LC	MX [k-ft]	LC	MY [k-ft]	LC	MZ [k-ft]	LC
6		min	0	1	0	2	0	1	0	1	0	1	0	1
7	N6	max	0	1	.318	1	0	1	0	1	0	1	0	1
8		min	0	1	0	2	0	1	0	1	0	1	0	1
9	N7	max	0	1	.228	1	0	1	0	1	0	1	0	1
10		min	0	1	0	3	0	1	0	1	0	1	0	1
11	N8	max	0	1	.376	3	0	1	0	1	0	1	0	1
12		min	0	1	.166	1	0	1	0	1	0	1	0	1
13	N9	max	0	1	.956	3	0	1	0	1	0	1	0	1
14		min	0	1	.13	1	0	1	0	1	0	1	0	1
15	N10	max	0	1	1.142	3	0	1	0	1	0	1	0	1
16		min	0	1	.118	1	0	1	0	1	0	1	0	1
17	N11	max	0	1	.956	3	0	1	0	1	0	1	0	1
18		min	0	1	.13	1	0	1	0	1	0	1	0	1
19	N12	max	0	1	.376	3	0	1	0	1	0	1	0	1
20		min	0	1	.166	1	0	1	0	1	0	1	0	1
21	N13	max	0	1	.357	2	0	1	0	1	0	1	0	1
22		min	0	1	0	3	0	1	0	1	0	1	0	1
23	N14	max	0	1	.385	2	0	1	0	1	0	1	0	1
24		min	0	1	0	3	0	1	0	1	0	1	0	1
25	N15	max	0	1	.443	2	0	1	0	1	0	1	0	1
26		min	0	1	0	3	0	1	0	1	0	1	0	1
27	Totals:	max	0	3	3.806	1	0	1						
28		min	-2.985	2	3.806	3	0	1						

Company : Renaud
Designer : P Lefebvre
Job Number : 5778

12x7 BCwTS - BR52 - Construction Phase - Factored Loads - LC3 Only

Feb 23, 2015
5:03 PM
Checked By:_____

Member Section Forces

	LC	Member Label	Sec	Axial[k]	y Shear[k]	z Shear[k]	Torque[k-ft]	y-y Mo...	z-z Mo...
1	3	M1	1	0	0	0	0	0	0
2			2	.079	-.199	0	0	0	.063
3			3	.158	-.439	0	0	0	.269
4			4	.237	-.721	0	0	0	.645
5			5	.316	-1.044	0	0	0	1.219
6			6	.394	-1.409	0	0	0	2.018
7			7	.473	-1.815	0	0	0	3.068
8			8	.552	-2.263	0	0	0	4.397
9			9	.631	-2.752	0	0	0	6.032
10			10	.71	-3.283	0	0	0	7.999
11			11	.789 N_u	-3.855 V_u	0	0	0	10.326
12			12	.868	-4.468	0	0	0	13.04
13			13	.947	-5.123	0	0	0	16.169
14	3	M2	1	0	0	0	0	0	0
15			2	.079	.199	0	0	0	-.063
16			3	.158	.439	0	0	0	-.269
17			4	.237	.721	0	0	0	-.645
18			5	.316	1.044	0	0	0	-1.219
19			6	.394	1.409	0	0	0	-2.018
20			7	.473	1.815	0	0	0	-3.068
21			8	.552	2.263	0	0	0	-4.397
22			9	.631	2.752	0	0	0	-6.032
23			10	.71	3.283	0	0	0	-7.999
24			11	.789	3.855	0	0	0	-10.326
25			12	.868	4.468	0	0	0	-13.04
26			13	.947	5.123	0	0	0	-16.169
27	3	M3	1	5.123	-.947	0	0	0	-16.169
28			2	5.123 N_u	-1.106 V_u	0	0	0	-15.085
29			3	5.123	-1.265	0	0	0	-13.834
30			4	5.123	-1.425	0	0	0	-12.414
31			5	5.123	-1.584	0	0	0	-10.826
32			6	5.123	-1.367	0	0	0	-9.467
33			7	5.123	-.571	0	0	0	-8.948
34			8	5.123	1.367	0	0	0	-9.467
35			9	5.123	1.584	0	0	0	-10.826
36			10	5.123	1.425	0	0	0	-12.414
37			11	5.123	1.265	0	0	0	-13.834
38			12	5.123	1.106	0	0	0	-15.085
39			13	5.123	.947	0	0	0	-16.169

Company : Renaud
Designer : P Lefebvre
Job Number : 5778

12x7 BCwTS - BR52 - In Service Phase - Factored Loads

Feb 23, 2015
4:19 PM
Checked By:_____

Load Combinations

	Description	Solve	PDelta	SRSS	B...	Fa...	B...	Fa...	B...	Fa...	B...	Fa...	B...	Fa...	B...	Fa...	B...	Fa...	B...	Fa...
1	DL	Yes			1	1.25														
2	Backfill one leg				1	1.25	2	1.5												
3	Backfill two legs + Surcharge two ...				1	1.25	2	1.5	3	1.5	6	1.75	7	1.75						
4	Backfill to FG (Deck Moment)	Yes			1	1.25	2	.9	3	.9	4	.75	5	1.3						
5	Backfill to FG (Knee Moment)	Yes			1	1.25	2	1.5	3	1.5	4	1.5	5	1.3						
6	Backfill to FG + LS left leg only	Yes			1	1.25	2	1.5	3	1.5	4	1.5	5	1.3	6	1.75				
7	Backfill to FG + LS both legs	Yes			1	1.25	2	1.5	3	1.5	4	1.5	5	1.3	6	1.75	7	1.75		
8	LC#4 + Truck	Yes			1	1.25	2	.9	3	.9	4	.75	5	1.3	M1	1.8...				
9	LC#4 + Tandem	Yes			1	1.25	2	.9	3	.9	4	.75	5	1.3	M2	1.8...				
10	LC#6 + Truck	Yes			1	1.25	2	1.5	3	1.5	4	1.5	5	1.3	6	1.75	M1	1.8...		
11	LC#6 + Tandem	Yes			1	1.25	2	1.5	3	1.5	4	1.5	5	1.3	6	1.75	M2	1.8...		
12	LC#7 + Truck	Yes			1	1.25	2	1.5	3	1.5	4	1.5	5	1.3	6	1.75	7	1.75	M1	1.8...
13	LC#7 + Tandem	Yes			1	1.25	2	1.5	3	1.5	4	1.5	5	1.3	6	1.75	7	1.75	M2	1.8...
14	Strength II																			
15	Backfill to FG + LS left leg only	Yes			1	1.25	2	1.5	3	1.5	4	1.5	5	1.3	6	1.35				
16	Backfill to FG + LS both legs	Yes			1	1.25	2	1.5	3	1.5	4	1.5	5	1.3	6	1.35	7	1.35		
17	LC#4 + Truck	Yes			1	1.25	2	.9	3	.9	4	.75	5	1.3	M1	1.4...				
18	LC#4 + Tandem	Yes			1	1.25	2	.9	3	.9	4	.75	5	1.3	M2	1.4...				
19	LC#15 + Truck	Yes			1	1.25	2	1.5	3	1.5	4	1.5	5	1.3	6	1.35	M1	1.4...		
20	LC#15 + Tandem	Yes			1	1.25	2	1.5	3	1.5	4	1.5	5	1.3	6	1.35	M2	1.4...		
21	LC#16 + Truck	Yes			1	1.25	2	1.5	3	1.5	4	1.5	5	1.3	6	1.35	7	1.35	M1	1.4...
22	LC#16 + Tandem	Yes			1	1.25	2	1.5	3	1.5	4	1.5	5	1.3	6	1.35	7	1.35	M2	1.4...

Envelope Member Section Forces

	Member	Sec		Axial[k]	LC	y She...	LC	z Shear[...	LC	Torque[k-ft]	LC	y-y Moment[k-...	LC	z-z Moment[...	LC
1	M1	1	max	12.365	11	3.2	7	0	1	0	1	0	1	0	1
2			min	.957	1	-.172	1	0	1	0	1	0	1	0	1
3		2	max	12.444	11	2.567	7	0	1	0	1	0	1	.112	1
4			min	1.035	1	-.172	1	0	1	0	1	0	1	-1.884	7
5		3	max	12.523	11	1.893	7	0	1	0	1	0	1	.224	1
6			min	1.114	1	-.172	1	0	1	0	1	0	1	-3.342	7
7		4	max	12.602	11	1.177	7	0	1	0	1	0	1	.336	1
8			min	1.193	1	-.352	9	0	1	0	1	0	1	-4.347	7
9		5	max	12.681	11	.42	7	0	1	0	1	0	1	.448	1
10			min	1.272	1	-.656	9	0	1	0	1	0	1	-4.87	7
11		6	max	12.76	11	-.172	1	0	1	0	1	0	1	.767	9
12			min	1.351	1	-1.219	11	0	1	0	1	0	1	-4.886	7 M_u
13		7	max	12.839	11	-.172	1	0	1	0	1	0	1	1.523	9
14			min	1.43	1	-2.059	11	0	1	0	1	0	1	-4.367	7
15		8	max	12.918	11	-.172	1	0	1	0	1	0	1	2.519	9
16			min	1.509	1	-2.941	11	0	1	0	1	0	1	-3.286	7
17		9	max	12.997	11	-.172	1	0	1	0	1	0	1	3.77	9
18			min	1.588	1	-3.863	11	0	1	0	1	0	1	-1.617	7
19		10	max	13.075	11	-.172	1	0	1	0	1	0	1	5.609	11
20			min	1.666	1	-4.828	11	0	1	0	1	0	1	.669	7
21		11	max	13.154	11	-.172	1	0	1	0	1	0	1	9.086	11
22			min	1.745	1	-5.834	11 V_u	0	1	0	1	0	1	1.121	1
23		12	max	13.233	11	-.172	1	0	1	0	1	0	1	13.234	11
24			min	1.824	1	-6.881	11	0	1	0	1	0	1	1.233	1
25		13	max	13.312	11	-.172	1	0	1	0	1	0	1	18.078	11
26			min	1.903	1	-7.969	11	0	1	0	1	0	1	1.345	1
27	M2	1	max	12.365	9	.172	1	0	1	0	1	0	1	0	1
28			min	.957	1	-3.2	7	0	1	0	1	0	1	0	1
29		2	max	12.444	9	.172	1	0	1	0	1	0	1	1.884	7
30			min	1.035	1	-2.567	7	0	1	0	1	0	1	-.112	1

Envelope Member Section Forces (Continued)

	Member	Sec		Axial[k]	LC	y She...	LC	z Shear[...	LC	Torque[k-ft]	LC	y-y Moment[k-...	LC	z-z Moment[...	LC
31		3	max	12.523	9	.172	1	0	1	0	1	0	1	3.342	7
32			min	1.114	1	-1.893	7	0	1	0	1	0	1	-.224	1
33		4	max	12.602	9	.352	9	0	1	0	1	0	1	4.347	7
34			min	1.193	1	-1.239	6	0	1	0	1	0	1	-.336	1
35		5	max	12.681	9	.656	9	0	1	0	1	0	1	4.87	7
36			min	1.272	1	-.66	6	0	1	0	1	0	1	-.448	1
37		6	max	12.76	9	.984	9	0	1	0	1	0	1	4.886	7
38			min	1.351	1	-.039	6	0	1	0	1	0	1	-.767	9
39		7	max	12.839	9	1.586	13	0	1	0	1	0	1	4.608	6
40			min	1.43	1	.172	1	0	1	0	1	0	1	-1.523	9
41		8	max	12.918	9	2.467	13	0	1	0	1	0	1	3.974	6
42			min	1.509	1	.172	1	0	1	0	1	0	1	-2.519	9
43		9	max	12.997	9	3.39	13	0	1	0	1	0	1	2.868	6
44			min	1.588	1	.172	1	0	1	0	1	0	1	-3.77	9
45		10	max	13.075	9	4.355	13	0	1	0	1	0	1	1.262	6
46			min	1.666	1	.172	1	0	1	0	1	0	1	-5.292	9
47		11	max	13.154	9	5.36	13	0	1	0	1	0	1	-.87	6
48			min	1.745	1	.172	1	0	1	0	1	0	1	-7.102	9
49		12	max	13.233	9	6.407	13	0	1	0	1	0	1	-1.233	1
50			min	1.824	1	.172	1	0	1	0	1	0	1	-9.835	13
51		13	max	13.312	9	7.496	13	0	1	0	1	0	1	-1.345	1
52			min	1.903	1	.172	1	0	1	0	1	0	1	-14.371	13
53	M3	1	max	7.496	13	-1.083	1	0	1	0	1	0	1	-1.345	1
54			min	.172	1	-9.525	11	0	1	0	1	0	1	-18.078	11
55		2	max	7.496	13	-1.243	1	0	1	0	1	0	1	-.117	1
56			min	.172	1	-9.684	11	0	1	0	1	0	1	-8.537	11
57		3	max	7.496	13	-.738	1	0	1	0	1	0	1	3.14	9
58			min	.172	1	-6.451	11	0	1	0	1	0	1	-2.867	11
59		4	max	7.496	13	-.398	1	0	1	0	1	0	1	5.811	9
60			min	.172	1	-3.986	11	0	1	0	1	0	1	.74	11
61		5	max	7.496	13	-.2	1	0	1	0	1	0	1	6.966	9
62			min	.172	1	-2.399	11	0	1	0	1	0	1	1.04	1
63		6	max	7.496	13	.276	9	0	1	0	1	0	1	7.312	9
64			min	.172	1	-1.536	11	0	1	0	1	0	1	1.071	1
65		7	max	7.496	13	.537	13	0	1	0	1	0	1	7.35	9
66			min	.172	1	-1.06	11	0	1	0	1	0	1	1.073	1
67		8	max	7.496	13	.985	13	0	1	0	1	0	1	7.581	11
68			min	.172	1	-.738	11	0	1	0	1	0	1	1.071	1
69		9	max	7.496	13	1.777	13	0	1	0	1	0	1	7.628	11
70			min	.172	1	.2	1	0	1	0	1	0	1	1.04	1
71		10	max	7.496	13	3.298	13	0	1	0	1	0	1	6.832	11
72			min	.172	1	.398	1	0	1	0	1	0	1	.914	1
73		11	max	7.496	13	5.772	13	0	1	0	1	0	1	4.514	11
74			min	.172	1	.738	1	0	1	0	1	0	1	-.397	13
75		12	max	7.496	13	9.191	13	0	1	0	1	0	1	-.117	1
76			min	.172	1	1.243	1	0	1	0	1	0	1	-5.35	13
77		13	max	7.496	13	9.032	13	0	1	0	1	0	1	-1.345	1
78			min	.172	1	1.083	1	0	1	0	1	0	1	-14.371	13
79	M4	1	max	3.2	7	12.365	9	0	1	0	1	0	1	0	1
80			min	-.172	1	.957	1	0	1	0	1	0	1	0	1
81		2	max	3.2	7	10.312	9	0	1	0	1	0	1	-.926	1
82			min	-.172	1	.797	1	0	1	0	1	0	1	-11.922	9
83		3	max	3.2	7	8.371	9	0	1	0	1	0	1	-1.683	1
84			min	-.172	1	.638	1	0	1	0	1	0	1	-21.676	9
85		4	max	3.2	7	6.423	9	0	1	0	1	0	1	-2.272	1
86			min	-.172	1	.478	1	0	1	0	1	0	1	-29.266	9
87		5	max	3.2	7	4.591	9	0	1	0	1	0	1	-2.693	1

V_u V_u M_u

Envelope Member Section Forces (Continued)

	Member	Sec		Axial[k]	LC	y She...	LC	z Shear[...	LC	Torque[k-ft]	LC	y-y Moment[k-...	LC	z-z Moment[...	LC
88			min	-.172	1	.319	1	0	1	0	1	0	1	-34.679	9
89		6	max	3.2	7	2.811	9	0	1	0	1	0	1	-2.945	1
90			min	-.172	1	.159	1	0	1	0	1	0	1	-37.929	9
91		7	max	3.2	7	.969	9	0	1	0	1	0	1	-3.029	1
92			min	-.172	1	-.969	9	0	1	0	1	0	1	-39.005	9 M_u
93		8	max	3.2	7	-.159	1	0	1	0	1	0	1	-2.945	1
94			min	-.172	1	-2.811	9	0	1	0	1	0	1	-37.929	9
95		9	max	3.2	7	-.319	1	0	1	0	1	0	1	-2.693	1
96			min	-.172	1	-4.591	9	0	1	0	1	0	1	-34.679	9
97		10	max	3.2	7	-.478	1	0	1	0	1	0	1	-2.272	1
98			min	-.172	1	-6.423	9	0	1	0	1	0	1	-29.266	9
99		11	max	3.2	7	-.638	1	0	1	0	1	0	1	-1.683	1
100			min	-.172	1	-8.371	9	0	1	0	1	0	1	-21.676	9
101		12	max	3.2	7	-.797	1	0	1	0	1	0	1	-.926	1
102			min	-.172	1	-10.312	9	0	1	0	1	0	1	-11.922	9
103		13	max	3.2	7	-.957	1	0	1	0	1	0	1	0	1
104			min	-.172	1	-12.365	9	0	1	0	1	0	1	0	1

Envelope Joint Reactions

	Joint		X [k]	LC	Y [k]	LC	Z [k]	LC	MX [k-ft]	LC	MY [k-ft]	LC	MZ [k-ft]	LC
1	N1	max	0	12	4.699	9	0	1	0	1	0	1	0	1
2		min	-2.138	10	.82	1	0	1	0	1	0	1	0	1
3	N4	max	0	1	4.927	11	0	1	0	1	0	1	0	1
4		min	0	1	.82	1	0	1	0	1	0	1	0	1
5	N5	max	0	1	3.733	9	0	1	0	1	0	1	0	1
6		min	0	1	.664	1	0	1	0	1	0	1	0	1
7	N6	max	0	1	2.668	13	0	1	0	1	0	1	0	1
8		min	0	1	.5	1	0	1	0	1	0	1	0	1
9	N7	max	0	1	1.863	11	0	1	0	1	0	1	0	1
10		min	0	1	.357	1	0	1	0	1	0	1	0	1
11	N8	max	0	1	1.179	11	0	1	0	1	0	1	0	1
12		min	0	1	.251	1	0	1	0	1	0	1	0	1
13	N9	max	0	1	.704	11	0	1	0	1	0	1	0	1
14		min	0	1	.186	1	0	1	0	1	0	1	0	1
15	N10	max	0	1	.519	13	0	1	0	1	0	1	0	1
16		min	0	1	.164	1	0	1	0	1	0	1	0	1
17	N11	max	0	1	.675	13	0	1	0	1	0	1	0	1
18		min	0	1	.186	1	0	1	0	1	0	1	0	1
19	N12	max	0	1	1.108	13	0	1	0	1	0	1	0	1
20		min	0	1	.251	1	0	1	0	1	0	1	0	1
21	N13	max	0	1	1.796	13	0	1	0	1	0	1	0	1
22		min	0	1	.357	1	0	1	0	1	0	1	0	1
23	N14	max	0	1	2.672	11	0	1	0	1	0	1	0	1
24		min	0	1	.5	1	0	1	0	1	0	1	0	1
25	N15	max	0	1	3.822	11	0	1	0	1	0	1	0	1
26		min	0	1	.664	1	0	1	0	1	0	1	0	1
27	Totals:	max	0	12	28.008	9	0	1						
28		min	-2.138	10	5.719	1	0	1						

Company : Renaud
Designer : P Lefebvre
Job Number : 5778
12x7 BCwTS - BR52 - In Service Phase - Factored Loads - LC7 Only

Feb 23, 2015
5:03 PM
Checked By:_____

Member Section Forces

	LC	Member Label	Sec	Axial[k]	y Shear[k]	z Shear[k]	Torque[k-ft]	y-y Mo...	z-z Mo...
1	7	M1	1	8.218	3.2	0	0	0	0
2			2	8.297	2.567	0	0	0	-1.884
3			3	8.376	1.893	0	0	0	-3.342
4			4	8.455	1.177	0	0	0	-4.347
5			5	8.534	.42	0	0	0	-4.87
6			6	8.613 N_u	-.378 V_u	0	0	0	-4.886
7			7	8.692	-1.218	0	0	0	-4.367
8			8	8.771	-2.1	0	0	0	-3.286
9			9	8.849	-3.023	0	0	0	-1.617
10			10	8.928	-3.987	0	0	0	.669
11			11	9.007	-4.993	0	0	0	3.597
12			12	9.086	-6.04	0	0	0	7.196
13			13	9.165	-7.129	0	0	0	11.492
14	7	M2	1	8.218	-3.2	0	0	0	0
15			2	8.297	-2.567	0	0	0	1.884
16			3	8.376	-1.893	0	0	0	3.342
17			4	8.455	-1.177	0	0	0	4.347
18			5	8.534	-.42	0	0	0	4.87
19			6	8.613	.378	0	0	0	4.886
20			7	8.692	1.218	0	0	0	4.367
21			8	8.771	2.1	0	0	0	3.286
22			9	8.849	3.023	0	0	0	1.617
23			10	8.928	3.987	0	0	0	-.669
24			11	9.007	4.993	0	0	0	-3.597
25			12	9.086	6.04	0	0	0	-7.196
26			13	9.165	7.129	0	0	0	-11.492
27	7	M3	1	7.129	-6.429	0	0	0	-11.492
28			2	7.129	-6.588	0	0	0	-4.622
29			3	7.129	-4.338	0	0	0	-.127
30			4	7.129	-2.616	0	0	0	2.55
31			5	7.129	-1.437	0	0	0	3.984
32			6	7.129	-.703	0	0	0	4.642
33			7	7.129	-.255	0	0	0	4.827
34			8	7.129	.703	0	0	0	4.642
35			9	7.129	1.437	0	0	0	3.984
36			10	7.129	2.616	0	0	0	2.55
37			11	7.129	4.338	0	0	0	-.127
38			12	7.129	6.588	0	0	0	-4.622
39			13	7.129	6.429	0	0	0	-11.492
40	7	M4	1	3.2	8.218	0	0	0	0
41			2	3.2	6.849	0	0	0	-7.952
42			3	3.2	5.479	0	0	0	-14.458
43			4	3.2	4.109	0	0	0	-19.519
44			5	3.2	2.739	0	0	0	-23.133
45			6	3.2	1.37	0	0	0	-25.302
46			7	3.2	0	0	0	0	-26.025
47			8	3.2	-1.37	0	0	0	-25.302
48			9	3.2	-2.739	0	0	0	-23.133
49			10	3.2	-4.109	0	0	0	-19.519
50			11	3.2	-5.479	0	0	0	-14.458
51			12	3.2	-6.849	0	0	0	-7.952
52			13	3.2	-8.218	0	0	0	0

Company : Renaud
Designer : P Lefebvre
Job Number : 5778
12x7 BCwTS - BR52 - In Service Phase - Factored Loads - LC9 Only

Feb 23, 2015
5:03 PM
Checked By:_____

Envelope Member Section Forces

	Member	Sec		Axial[k]	LC	y She...	LC	z Shear[...	LC	Torque[k-ft]	LC	y-y Moment[k-...	LC	z-z Moment[...	LC
1	M1	1	max	12.365	9	.771	9	0	9	0	9	0	9	0	9
2			min	8.218	9	.411	9	0	9	0	9	0	9	0	9
3		2	max	12.444	9	.542	9	0	9	0	9	0	9	-.195	9
4			min	8.297	9	.182	9	0	9	0	9	0	9	-.43	9
5		3	max	12.523	9	.288	9	0	9	0	9	0	9	-.232	9
6			min	8.376	9	-.073	9	0	9	0	9	0	9	-.702	9
7		4	max	12.602	9	.009	9	0	9	0	9	0	9	-.095	9
8			min	8.455	9	-.352	9	0	9	0	9	0	9	-.8	9
9		5	max	12.681	9	-.295	9	0	9	0	9	0	9	.233	9
10			min	8.534	9	-.656	9	0	9	0	9	0	9	-.708	9
11		6	max	12.76	9	-.624	9	0	9	0	9	0	9	.767	9
12			min	8.613	9	-.984	9	0	9	0	9	0	9	-.409	9
13		7	max	12.839	9	-.978	9	0	9	0	9	0	9	1.523	9
14			min	8.692	9	-1.338	9	0	9	0	9	0	9	.112	9
15		8	max	12.918	9	-1.356	9	0	9	0	9	0	9	2.519	9
16			min	8.771	9	-1.717	9	0	9	0	9	0	9	.873	9
17		9	max	12.997	9	-1.76	9	0	9	0	9	0	9	3.77	9
18			min	8.849	9	-2.12	9	0	9	0	9	0	9	1.889	9
19		10	max	13.075	9	-2.188	9	0	9	0	9	0	9	5.292	9
20			min	8.928	9	-2.548	9	0	9	0	9	0	9	3.176	9
21		11	max	13.154	9	-2.641	9	0	9	0	9	0	9	7.102	9
22			min	9.007	9	-3.001	9	0	9	0	9	0	9	4.751	9
23		12	max	13.233	9	-3.119	9	0	9	0	9	0	9	9.216	9
24			min	9.086	9	-3.48	9	0	9	0	9	0	9	6.63	9
25		13	max	13.312	9	-3.622	9	0	9	0	9	0	9	11.65	9
26			min	9.165	9	-3.982	9	0	9	0	9	0	9	8.829	9
27	M2	1	max	12.365	9	-.411	9	0	9	0	9	0	9	0	9
28			min	8.218	9	-.771	9	0	9	0	9	0	9	0	9
29		2	max	12.444	9	-.182	9	0	9	0	9	0	9	.43	9
30			min	8.297	9	-.542	9	0	9	0	9	0	9	.195	9
31		3	max	12.523	9	.073	9	0	9	0	9	0	9	.702	9
32			min	8.376	9	-.288	9	0	9	0	9	0	9	.232	9
33		4	max	12.602	9	.352	9	0	9	0	9	0	9	.8	9
34			min	8.455	9	-.009	9	0	9	0	9	0	9	.095	9
35		5	max	12.681	9	.656	9	0	9	0	9	0	9	.708	9
36			min	8.534	9	.295	9	0	9	0	9	0	9	-.233	9
37		6	max	12.76	9	.984	9	0	9	0	9	0	9	.409	9
38			min	8.613	9	.624	9	0	9	0	9	0	9	-.767	9
39		7	max	12.839	9	1.338	9	0	9	0	9	0	9	-.112	9
40			min	8.692	9	.978	9	0	9	0	9	0	9	-1.523	9
41		8	max	12.918	9	1.717	9	0	9	0	9	0	9	-.873	9
42			min	8.771	9	1.356	9	0	9	0	9	0	9	-2.519	9
43		9	max	12.997	9	2.12	9	0	9	0	9	0	9	-1.889	9
44			min	8.849	9	1.76	9	0	9	0	9	0	9	-3.77	9
45		10	max	13.075	9	2.548	9	0	9	0	9	0	9	-3.176	9
46			min	8.928	9	2.188	9	0	9	0	9	0	9	-5.292	9
47		11	max	13.154	9	3.001	9	0	9	0	9	0	9	-4.751	9
48			min	9.007	9	2.641	9	0	9	0	9	0	9	-7.102	9
49		12	max	13.233	9	3.48	9	0	9	0	9	0	9	-6.63	9
50			min	9.086	9	3.119	9	0	9	0	9	0	9	-9.216	9
51		13	max	13.312	9	3.982	9	0	9	0	9	0	9	-8.829	9
52			min	9.165	9	3.622	9	0	9	0	9	0	9	-11.65	9
53	M3	1	max	3.982	9	-6.027	9	0	9	0	9	0	9	-8.829	9
54			min	3.622	9	-8.622	9	0	9	0	9	0	9	-11.65	9
55		2	max	3.982	9	-6.187	9	0	9	0	9	0	9	-1.882	9
56			min	3.622	9	-8.781	9	0	9	0	9	0	9	-3.062	9

Company : Renaud
Designer : P Lefebvre
Job Number : 5778
12x7 BCwTS - BR52 - In Service Phase - Factored Loads - LC9 Only

Feb 23, 2015
5:03 PM
Checked By:_____

Envelope Member Section Forces (Continued)

	Member	Sec		Axial[k]	LC	y She...	LC	z Shear[...	LC	Torque[k-ft]	LC	y-y Moment[k-...	LC	z-z Moment[...	LC
57		3	max	3.982	9	-3.79	9	0	9	0	9	0	9	3.14	9
58			min	3.622	9	-5.211	9	0	9	0	9	0	9	1.298	9
59		4	max	3.982	9	-2.08	9	0	9	0	9	0	9	5.811	9
60			min	3.622	9	-2.751	9	0	9	0	9	0	9	3.602	9
61		5	max	3.982	9	-.935	9	0	9	0	9	0	9	6.966	9
62			min	3.622	9	-1.341	9	0	9	0	9	0	9	4.643	9
63		6	max	3.982	9	.276	9	0	9	0	9	0	9	7.312	9
64			min	3.622	9	-.708	9	0	9	0	9	0	9	5.031	9
65		7	max	3.982	9	.443	9	0	9	0	9	0	9	7.35	9
66			min	3.622	9	-.443	9	0	9	0	9	0	9	5.138	9
67		8	max	3.982	9	.708	9	0	9	0	9	0	9	7.312	9
68			min	3.622	9	-.276	9	0	9	0	9	0	9	5.031	9
69		9	max	3.982	9	1.341	9	0	9	0	9	0	9	6.966	9
70			min	3.622	9	.935	9	0	9	0	9	0	9	4.643	9
71		10	max	3.982	9	2.751	9	0	9	0	9	0	9	5.811	9
72			min	3.622	9	2.08	9	0	9	0	9	0	9	3.602	9
73		11	max	3.982	9	5.211	9	0	9	0	9	0	9	3.14	9
74			min	3.622	9	3.79	9	0	9	0	9	0	9	1.298	9
75		12	max	3.982	9	8.781	9	0	9	0	9	0	9	-1.882	9
76			min	3.622	9	6.187	9	0	9	0	9	0	9	-3.062	9
77		13	max	3.982	9	8.622	9	0	9	0	9	0	9	-8.829	9
78			min	3.622	9	6.027	9	0	9	0	9	0	9	-11.65	9
79	M4	1	max	.771	9	12.365	9	0	9	0	9	0	9	0	9
80			min	.411	9	8.218	9	0	9	0	9	0	9	0	9
81		2	max	.771	9	10.312	9	0	9	0	9	0	9	-7.952	9
82			min	.411 M_u	9	6.817	9	0	9	0	9	0	9	-11.922	9
83		3	max	.771	9	8.371	9	0	9	0	9	0	9	-14.458	9
84			min	.411	9	5.364	9	0	9	0	9	0	9	-21.676	9
85		4	max	.771	9	6.423	9	0	9	0	9	0	9	-19.519	9
86			min	.411	9	3.86	9	0	9	0	9	0	9	-29.266	9
87		5	max	.771	9	4.591	9	0	9	0	9	0	9	-23.133	9
88			min	.411	9	2.304	9	0	9	0	9	0	9	-34.679	9
89		6	max	.771	9	2.811	9	0	9	0	9	0	9	-25.302	9
90			min	.411	9	.698	9	0	9	0	9	0	9	-37.929	9
91		7	max	.771 M_u	9	.969 V_u	9	0	9	0	9	0	9	-26.025	9
92			min	.411	9	-.969	9	0	9	0	9	0	9	-39.005	9
93		8	max	.771	9	-.698	9	0	9	0	9	0	9	-25.302	9
94			min	.411	9	-2.811	9	0	9	0	9	0	9	-37.929	9
95		9	max	.771	9	-2.304	9	0	9	0	9	0	9	-23.133	9
96			min	.411	9	-4.591	9	0	9	0	9	0	9	-34.679	9
97		10	max	.771	9	-3.86	9	0	9	0	9	0	9	-19.519	9
98			min	.411	9	-6.423	9	0	9	0	9	0	9	-29.266	9
99		11	max	.771	9	-5.364	9	0	9	0	9	0	9	-14.458	9
100			min	.411	9	-8.371	9	0	9	0	9	0	9	-21.676	9
101		12	max	.771	9	-6.817	9	0	9	0	9	0	9	-7.952	9
102			min	.411	9	-10.312	9	0	9	0	9	0	9	-11.922	9
103		13	max	.771	9	-8.218	9	0	9	0	9	0	9	0	9
104			min	.411	9	-12.365	9	0	9	0	9	0	9	0	9

M_u-RISA

Company : Renaud
Designer : P Lefebvre
Job Number : 5778
12x7 BCwTS - BR52 - In Service Phase - Factored Loads - LC11 Only

Feb 23, 2015
5:04 PM
Checked By:_____

Envelope Member Section Forces

	Member	Sec		Axial[k]	LC	y She...	LC	z Shear[...	LC	Torque[k-ft]	LC	y-y Moment[k-...	LC	z-z Moment[...	LC
1	M1	1	max	12.365	11	2.719	11	0	11	0	11	0	11	0	11
2			min	8.218	11	2.359	11	0	11	0	11	0	11	0	11
3		2	max	12.444	11	2.086	11	0	11	0	11	0	11	-1.336	11
4			min	8.297	11	1.726	11	0	11	0	11	0	11	-1.571	11
5		3	max	12.523	11	1.412	11	0	11	0	11	0	11	-2.245	11
6			min	8.376	11	1.052	11	0	11	0	11	0	11	-2.715	11
7		4	max	12.602	11	.697	11	0	11	0	11	0	11	-2.7	11
8			min	8.455	11	.336	11	0	11	0	11	0	11	-3.405	11
9		5	max	12.681	11	-.06	11	0	11	0	11	0	11	-2.675	11
10			min	8.534	11	-.421	11	0	11	0	11	0	11	-3.615	11
11		6	max	12.76	11	-.859	11	0	11	0	11	0	11	-2.142	11
12			min	8.613	11	-1.219	11	0	11	0	11	0	11	-3.317	11
13		7	max	12.839	11	-1.699	11	0	11	0	11	0	11	-1.074	11
14			min	8.692	11	-2.059	11	0	11	0	11	0	11	-2.485	11
15		8	max	12.918	11	-2.58	11	0	11	0	11	0	11	.556	11
16			min	8.771	11	-2.941	11	0	11	0	11	0	11	-1.09	11
17		9	max	12.997	11	-3.503	11	0	11	0	11	0	11	2.774	11
18			min	8.849	11	-3.863	11	0	11	0	11	0	11	.893	11
19		10	max	13.075	11	-4.468	11	0	11	0	11	0	11	5.609	11
20			min	8.928	11	-4.828	11	0	11	0	11	0	11	3.492	11
21		11	max	13.154	11	-5.473	11	0	11	0	11	0	11	9.086	11
22			min	9.007	11	-5.834	11	0	11	0	11	0	11	6.735	11
23		12	max	13.233	11	-6.521	11	0	11	0	11	0	11	13.234	11
24			min	9.086	11	-6.881	11	0	11	0	11	0	11	10.647	11
25		13	max	13.312	11	-7.609	11	0	11	0	11	0	11	18.078	11
26			min	9.165	11	-7.969	11	0	11	0	11	0	11	15.257	11
27	M2	1	max	12.365	11	-2.359	11	0	11	0	11	0	11	0	11
28			min	8.218	11	-2.719	11	0	11	0	11	0	11	0	11
29		2	max	12.444	11	-1.904	11	0	11	0	11	0	11	1.629	11
30			min	8.297	11	-2.265	11	0	11	0	11	0	11	1.394	11
31		3	max	12.523	11	-1.408	11	0	11	0	11	0	11	2.947	11
32			min	8.376	11	-1.769	11	0	11	0	11	0	11	2.477	11
33		4	max	12.602	11	-.871	11	0	11	0	11	0	11	3.929	11
34			min	8.455	11	-1.231	11	0	11	0	11	0	11	3.223	11
35		5	max	12.681	11	-.292	11	0	11	0	11	0	11	4.546	11
36			min	8.534	11	-.652	11	0	11	0	11	0	11	3.605	11
37		6	max	12.76	11	.328	11	0	11	0	11	0	11	4.772	11
38			min	8.613	11	-.032	11	0	11	0	11	0	11	3.596	11
39		7	max	12.839	11	.99	11	0	11	0	11	0	11	4.579	11
40			min	8.692	11	.63	11	0	11	0	11	0	11	3.168	11
41		8	max	12.918	11	1.693	11	0	11	0	11	0	11	3.94	11
42			min	8.771	11	1.333	11	0	11	0	11	0	11	2.294	11
43		9	max	12.997	11	2.438	11	0	11	0	11	0	11	2.83	11
44			min	8.849	11	2.078	11	0	11	0	11	0	11	.948	11
45		10	max	13.075	11	3.224	11	0	11	0	11	0	11	1.219	11
46			min	8.928	11	2.864	11	0	11	0	11	0	11	-.897	11
47		11	max	13.154	11	4.051	11	0	11	0	11	0	11	-.918	11
48			min	9.007	11	3.691	11	0	11	0	11	0	11	-3.27	11
49		12	max	13.233	11	4.92	11	0	11	0	11	0	11	-3.609	11
50			min	9.086	11	4.56	11	0	11	0	11	0	11	-6.196	11
51		13	max	13.312	11	5.831	11	0	11	0	11	0	11	-6.881	11
52			min	9.165	11	5.471	11	0	11	0	11	0	11	-9.703	11
53	M3	1	max	5.831	11	-6.931	11	0	11	0	11	0	11	-15.257	11
54			min	5.471	11	-9.525	11	0	11	0	11	0	11	-18.078	11
55		2	max	5.831	11	-7.09	11	0	11	0	11	0	11	-7.357	11
56			min	5.471	11	-9.684	11	0	11	0	11	0	11	-8.537	11

Mv_RISA

Mu

Mu

MuRISA

Company : Renaud
Designer : P Lefebvre
Job Number : 5778

12x7 BCwTS - BR52 - In Service Phase - Factored Loads - LC11 Only

Feb 23, 2015
5:04 PM
Checked By:_____

Envelope Member Section Forces (Continued)

	Member	Sec		Axial[k]	LC	y She...	LC	z Shear[...	LC	Torque[k-ft]	LC	y-y Moment[k-...	LC	z-z Moment[...	LC
57		3	max	5.831	11	-5.031	11	0	11	0	11	0	11	-1.025	11
58			min	5.471	11	-6.451	11	0	11	0	11	0	11	-2.867	11
59		4	max	5.831	11	-3.315	11	0	11	0	11	0	11	2.95	11
60			min	5.471	11	-3.986	11	0	11	0	11	0	11	.74	11
61		5	max	5.831	11	-1.993	11	0	11	0	11	0	11	5.222	11
62			min	5.471	11	-2.399	11	0	11	0	11	0	11	2.899	11
63		6	max	5.831	11	-1.035	11	0	11	0	11	0	11	6.442	11
64			min	5.471	11	-1.536	11	0	11	0	11	0	11	4.16	11
65		7	max	5.831	11	-.5	11	0	11	0	11	0	11	7.13	11
66			min	5.471	11	-1.06	11	0	11	0	11	0	11	4.919	11
67		8	max	5.831	11	.335	11	0	11	0	11	0	11	7.581	11
68			min	5.471	11	-.738	11	0	11	0	11	0	11	5.299	11
69		9	max	5.831	11	1.001	11	0	11	0	11	0	11	7.628	11
70			min	5.471	11	.595	11	0	11	0	11	0	11	5.306	11
71		10	max	5.831	11	2.416	11	0	11	0	11	0	11	6.832	11
72			min	5.471	11	1.745	11	0	11	0	11	0	11	4.622	11
73		11	max	5.831	11	4.895	11	0	11	0	11	0	11	4.514	11
74			min	5.471	11	3.474	11	0	11	0	11	0	11	2.672	11
75		12	max	5.831	11	8.553	11	0	11	0	11	0	11	-.175	11
76			min	5.471	11	5.959	11	0	11	0	11	0	11	-1.355	11
77		13	max	5.831	11	8.394	11	0	11	0	11	0	11	-6.881	11
78			min	5.471	11	5.8	11	0	11	0	11	0	11	-9.703	11
79	M4	1	max	2.719	11	12.365	11	0	11	0	11	0	11	0	11
80			min	2.359	11	8.218	11	0	11	0	11	0	11	0	11
81		2	max	2.719	11	10.312	11	0	11	0	11	0	11	-7.952	11
82			min	2.359	11	6.817	11	0	11	0	11	0	11	-11.922	11
83		3	max	2.719	11	8.371	11	0	11	0	11	0	11	-14.458	11
84			min	2.359	11	5.364	11	0	11	0	11	0	11	-21.676	11
85		4	max	2.719	11	6.423	11	0	11	0	11	0	11	-19.519	11
86			min	2.359	11	3.86	11	0	11	0	11	0	11	-29.266	11
87		5	max	2.719	11	4.591	11	0	11	0	11	0	11	-23.133	11
88			min	2.359	11	2.304	11	0	11	0	11	0	11	-34.679	11
89		6	max	2.719	11	2.811	11	0	11	0	11	0	11	-25.302	11
90			min	2.359	11	.698	11	0	11	0	11	0	11	-37.929	11
91		7	max	2.719	11	.969	11	0	11	0	11	0	11	-26.025	11
92			min	2.359	11	-.969	11	0	11	0	11	0	11	-39.005	11
93		8	max	2.719	11	-.698	11	0	11	0	11	0	11	-25.302	11
94			min	2.359	11	-2.811	11	0	11	0	11	0	11	-37.929	11
95		9	max	2.719	11	-2.304	11	0	11	0	11	0	11	-23.133	11
96			min	2.359	11	-4.591	11	0	11	0	11	0	11	-34.679	11
97		10	max	2.719	11	-3.86	11	0	11	0	11	0	11	-19.519	11
98			min	2.359	11	-6.423	11	0	11	0	11	0	11	-29.266	11
99		11	max	2.719	11	-5.364	11	0	11	0	11	0	11	-14.458	11
100			min	2.359	11	-8.371	11	0	11	0	11	0	11	-21.676	11
101		12	max	2.719	11	-6.817	11	0	11	0	11	0	11	-7.952	11
102			min	2.359	11	-10.312	11	0	11	0	11	0	11	-11.922	11
103		13	max	2.719	11	-8.218	11	0	11	0	11	0	11	0	11
104			min	2.359	11	-12.365	11	0	11	0	11	0	11	0	11

Designed By: PJL
Checked By:
Date Printed: 3/26/2015

Renaud Brothers, #5779
12x5 BCwTS - WW2
Bridge 47
Winhall, VT

Design/Analysis References:

1. AASHTO LRFD Bridge Design Specifications, 6th Edition.
2. NHDOT 2010 Standard Specifications for Road and Bridge Construction.
3. Das, Principles of Foundation Engineering, 5th Edition.
4. Holtz & Kovacs, Introduction to Geotechnical Engineering
5. AISC, Steel Construction Manual, 13th Edition
6. Highway Innovative Technology Evaluation Center (HITEC), Evaluation of the Con/Span Wingwall System, CERF Report #40580, July 2001.

Assumptions:

1. It is assumed that the failure plane of the soil to be retained by this wall will lie within the proposed backfill material.
2. Backfill and foundation material assumptions shall match that of the shop drawings.
3. The installation of the weepholes will preclude the development of hydrostatic pressures on the wall.
4. Passive earth pressure in front of the wall is ignored per AASHTO 11.6.3.5.
5. Wing Angles (w.r.t roadway). The 12x7 Box Culvert and Wingwalls comprise the crossing of VT Route 30 over an unnamed brook. All 4 WW's are skewed 45 deg from the culvert. The roadway is skewed 76 degrees from the culvert (i.e. 14 degrees off of square). Therefore, WW1 and WW4 are skewed 31 deg from the roadway, WW2 and WW3 are skewed 59 deg from the roadway.
6. Backslope Angle. The roadway behind WW4 has a backslope of 2:1. The roadway behind WW2 is 3:1.
7. Live Load Surcharge. Vehicular Surcharge is applied when traffic can come within a distance of half the height of the wall to the back face of wall (measured perpendicular to the road). Conservatively take distance to traffic (d.traffic) at the wing-culvert connection. All wings are greater than H/2 from traffic. Use 10' for simplicity.
8. Controlling Wingwall Design(s). WW4 and WW2 are the tallest wings and have +- the same design height. Since WW4 has a 2:1 backslope behind it, WW4 will control design.
9. Design Methodology.
   - The HITEC Evaluation (page 3) explains that the Anchor Wall acts as a cantilever wall for most of its length since the weight of the soil within and above the anchors provides resistance to overturning. The wall also has attributes of a bin wall since arching and friction of soil masses between anchors provides additional resistance. Therefore, the provisions of AASHTO Sections 11.6 (Conventional Retaining Walls) and 11.11 (Modular Walls) shall be applied.
   - Per AASHTO 11.11.4.4, a maximum of 80% of the weight of the retained soil is effective in resisting overturning. The HITEC Evaluation (pages D29-D33) evaluated the accuracy of this assumption and found that using 80% of the soil weight is a conservative assumption.

Designed By: PJL
Checked By:
Date Printed: 3/26/2015

Renaud Brothers, #5779
12x5 BCwTS - WW2
Bridge 47
Winhall, VT

General Input:

$ELV_{walltop} := 1930.25ft - 2in = 1930.08\,ft$	Elevation of the Wingwall at its tallest point
$ELV_{walltip} := 1929.25ft$	Elevation of Wingwall at its tip.
$ELV_{bot.ftg} := 1916.52ft$	Elevation of the Bottom of the Wall Footing
$t_{ftg} := 3ft$	Thickness of Wall Footing
$h_{ftg} := 3ft + 2in = 3.167\,ft$	Height of Wall Footing
$h_{short} := ELV_{walltip} - ELV_{bot.ftg} - h_{ftg} - 1in = 9.48\,ft$	Short end of wall (less 1" for shim)
$h_{tall} := ELV_{walltop} - ELV_{bot.ftg} - h_{ftg} - 1in = 10.313\,ft$	Tall end of wall (less 1" for shim)
$l_{wall} := 10ft$	Length of Wall Panel
$l_{flat} := 1ft$	Length of flat portion of wingwall before break in slope.
$t_{wall} := 10in$	Thickness of Wall Panel
$t_{stem} := 6in$	Thickness of Anchor Stem
$w_{flange} := 2ft + 6in$	Width of Anchor Flange
$\alpha_{skew} := 76deg - 45deg = 31\,deg$	Angle of ww skew in plan view, measured from edge of roadway. (to measure distance to traffic for each anchor)
$\theta_{wall} := 90deg$	Wall batter angle with horizontal
$\theta_{anchor} := \theta_{wall} + 30deg$	Anchor batter angle with horizontal
$\beta := atan\left(\frac{\cos(\alpha_{skew})}{2}\right) = 23.199 \cdot deg$	Backfill slope angle with horizontal, measured perpendicular to the wall.
$d_{traffic} := 10ft$	Estimated minimum distance to traffic, measured from backfill side of wall and perpendicular to the wall.
$BreakInSlope := 2ft$	Assumed distance from face of guardrail to break-in-slope, meaured perpendicular to the wall.

Wall Material Properties

Concrete

Designed By: PJL
Checked By:
Date Printed: 3/26/2015

Renaud Brothers, #5779
12x5 BCwTS - WW2
Bridge 47
Winhall, VT

$f_c := 5000 \frac{lbf}{in^2}$ $E_c := 4074ksi$ $Aggregate_{diam} := .75in$

$\gamma_c := 150pcf$ Assumed unit weight of concrete panel.

β_1 = Stress Block Factor specified in Article 5.7.2.2

$$\beta_1 := \max\left[.65, \left[\begin{array}{l} .85 \text{ if } f_c < 4000psi \\ .85 - \frac{.05}{psi}\cdot\left(\frac{f_c - 4000psi}{1000}\right) \text{ otherwise} \end{array}\right]\right] = 0.8$$

Steel:

$f_y := 60000 \frac{lbf}{in^2}$ $E_s := 29000ksi$

Soil:

$q_R := 6ksf$ Factored Bearing Resistance (per contract) at service limit state controls. Conservatively use factored loads at strength limit state against the service level bearing resistance shown.

$\gamma_s := 140pcf$ Assumed soil unit weight for all soil

$q_{sur} := 2ft\cdot\gamma_s = 280\cdot psf$ Surcharge Soil Pressure (AASHTO Tbl 3.11.6.4-2)

$\phi_{ftg} := 35deg$ Friction Angle of Soil below Wall Footing

$\phi_{backfill} := 34deg$ Friction Angle of Backfill Soil

$\delta_{wall} := 0.75\cdot\phi_{backfill} = 25.5\cdot deg$ AASHTO C3.11.5.9-1 and HITEC p.D19

$\delta_{anchor} := 0.50\cdot\phi_{backfill} = 17\cdot deg$ AASHTO C3.11.5.9-1 and HITEC p.D19

$$k_{a.wall} := \frac{\sin(\theta_{wall} + \phi_{backfill})^2}{\sin(\theta_{wall})^2\cdot\sin(\theta_{wall} - \delta_{wall})\cdot\left(1 + \sqrt{\frac{\sin(\phi_{backfill} + \delta_{wall})\cdot\sin(\phi_{backfill} - \beta)}{\sin(\theta_{wall} - \delta_{wall})\cdot\sin(\theta_{wall} + \beta)}}\right)^2} = 0.367$$

AASHTO 3.11.5.3

Designed By: PJL
Checked By:
Date Printed: 3/26/2015

Renaud Brothers, #5779
12x5 BCwTS - WW2
Bridge 47
Winhall, VT

$$k_{a.anchor} := \frac{\sin(\theta_{anchor} + \phi_{backfill})^2}{\sin(\theta_{anchor})^2 \cdot \sin(\theta_{anchor} - \delta_{anchor}) \cdot \left(1 + \sqrt{\frac{\sin(\phi_{backfill} + \delta_{anchor}) \cdot \sin(\phi_{backfill} - \beta)}{\sin(\theta_{anchor} - \delta_{anchor}) \cdot \sin(\theta_{anchor} + \beta)}}\right)^2} = 0.117$$

AASHTO 3.11.5.3

$$k_0 := 1 - \sin(\phi_{backfill}) = 0.441$$

AASHTO 3.11.5.2-1

Determine Load Factors (Strength I) (AASHTO 1.3 and Table 3.4.1-1)

Load Modifiers

$\eta_D := 1.00$ Ductility for a conventional design

$\eta_R := 1.00$ Redundancy for conventional design

$\eta_I := 1.00$ Importance for a conventional bridge

$\eta_i := \max(\eta_D \cdot \eta_R \cdot \eta_I, 0.95)$ $\eta_i = 1$

Load Factor	Max	Min	Service	
γ_{DC}	1.25	0.9	1.0	Component Dead Loads
γ_{EH}	1.5	0.9	1.0	Horizontal Earth Loads
γ_{EV}	1.35	1.0	1.0	Vertical Earth Loads
γ_{LL}	1.75	1.75	1.0	Live Loads

Anchor Types, Layout and Backfill Geometry

ConnectedToBridge := "No"

To account for the connection of the wing to the bridge. Choose between Yes and No.

$AnchorType_1$:= "C"

Anchor Type to be tied to the back face of the wall. Chosen between Anchor Type B, C, D, and E as defined below.

$AnchorType_2$:= "C"

$AnchorType_3 := \text{"C"}$

$dist_{anchor.1} := 2.5ft$

$dist_{anchor.2} := 5ft$

$dist_{anchor.3} := 0$

Distance to each anchor is from culvert end of wing. Anchor 1 is closest to culvert.

Note: Research in HITEC report supports spacing from 2.5 ft (anchors are touching) to 5.5 feet (HITEC Report pages D29-D33). If distance between anchors increases beyond 5.5 ft, data supporting the usable 80% soil weight assumption shall be provided due to possible affects on soil arching between the anchors. Similarly, anchor closest to the wall tip shall not exceed 3 feet without supporting data.

If only 1 anchor is used, set $dist_{anchor2} = dist_{anchor3} = 0$.

If only 2 anchors are used, set $dist_{anchor3} = 0$.

Tributary Width of Wall for each Anchor

$$trib_{plates} := \begin{cases} 0 & \text{if } ConnectedToBridge = \text{"No"} \\ \frac{1}{2} \cdot dist_{anchor.1} & \text{otherwise} \end{cases} = 0\,ft$$

$$trib_1 := \begin{cases} l_{wall} - trib_{plates} & \text{if } dist_{anchor.2} = 0 \\ \frac{1}{2} \cdot \left(dist_{anchor.1} + dist_{anchor.2}\right) - trib_{plates} & \text{otherwise} \end{cases} = 3.75\,ft$$

$$trib_2 := \begin{cases} \left[l_{wall} - \frac{1}{2}\left(dist_{anchor.1} + dist_{anchor.2}\right)\right] & \text{if } dist_{anchor.3} = 0 \\ \frac{1}{2}\left(dist_{anchor.2} + dist_{anchor.3}\right) - \frac{1}{2}\left(dist_{anchor.1} + dist_{anchor.2}\right) & \text{otherwise} \end{cases} = 6.25\,ft$$

$$trib_3 := l_{wall} - \left(trib_1 + trib_2 + trib_{plates}\right) = 0\,ft$$

Height of Wall at CL of Each Anchor

$$h(x) := \begin{cases} 0 & \text{if } x = 0 \\ h_{tall} & \text{if } 0 < x \le l_{flat} \\ \left[h_{tall} - \left(\frac{h_{tall} - h_{short}}{l_{wall} - l_{flat}}\right) \cdot \left(x - l_{flat}\right)\right] & \text{otherwise} \end{cases}$$

$h_{wall.1} := h\left(dist_{anchor.1}\right) = 10.174\,ft$ Height of wall at each anchor

$h_{wall.2} := h\left(dist_{anchor.2}\right) = 9.943\,ft$

$h_{wall.3} := h(dist_{anchor.3}) = 0\,ft$

Length of each Anchor Stem Extension

$$W(x) := \begin{cases} (0ft) & \text{if } x = \text{"B"} \\ (1ft) & \text{if } x = \text{"C"} \\ (2ft) & \text{if } x = \text{"D"} \\ (3ft) & \text{if } x = \text{"E"} \end{cases}$$

W is the additional anchor stem length beyond that of a "B" anchor. W(B) = 0

$W_1 := W(AnchorType_1) = 1\,ft$

$W_2 := W(AnchorType_2) = 1\,ft$

$W_3 := W(AnchorType_3) = 1\,ft$

Width of Soil Column above each Anchor

B_{bot} is the width of the soil column at the top of the anchor, measured from backfill side of wall to upper tip of each anchor.

$$B_{bot.1} := W_1 + (3ft + 5.375in) + \frac{7in}{\cos(30deg)} = 5.121\,ft$$

$$B_{bot.2} := W_2 + (3ft + 5.375in) + \frac{7in}{\cos(30deg)} = 5.121\,ft$$

$$B_{bot.3} := W_3 + (3ft + 5.375in) + \frac{7in}{\cos(30deg)} = 5.121\,ft$$

$B_{bot.lower}$ is the width of the soil column at the bottom of the anchor, measured from backfill side of wall to bottom tip of anchor.

$$B_{bot.lower.1} := W_1 + \left(1ft + 4in + \frac{7in}{\cos(30deg)}\right) = 3.007\,ft$$

$$B_{bot.lower.2} := W_2 + \left(1ft + 4in + \frac{7in}{\cos(30deg)}\right) = 3.007\,ft$$

$$B_{bot.lower.3} := W_3 + \left(1ft + 4in + \frac{7in}{\cos(30deg)}\right) = 3.007\,ft$$

Perpendicular Distance to Traffic at each Anchor

$$d_{traffic.1} := d_{traffic} + dist_{anchor.1} \cdot \tan(\alpha_{skew}) = 11.502\,ft$$

$$d_{traffic.2} := d_{traffic} + dist_{anchor.2} \cdot \tan(\alpha_{skew}) = 13.004\,ft$$

$d_{traffic.3} := d_{traffic} + dist_{anchor.3} \cdot \tan(\alpha_{skew}) = 10\,ft$

Height of backfill at CL of each anchor

$d_{slope.1} := \max(0, \min(B_{bot.1}, d_{traffic.1} - BreakInSlope)) = 5.121\,ft$

$d_{slope.2} := \max(0, \min(B_{bot.2}, d_{traffic.2} - BreakInSlope)) = 5.121\,ft$

$d_{slope.3} := \max(0, \min(B_{bot.3}, d_{traffic.3} - BreakInSlope)) = 5.121\,ft$

Distance to break in slope, measured perpendicular to wall from inside face of wall, limited by B.bot.

$h_{backfill.1} := \max(h_{wall.1}, h_{wall.1} + \min(B_{bot.1}, d_{slope.1}) \cdot \tan(\beta)) = 12.369\,ft$

$h_{backfill.2} := \max(h_{wall.2}, h_{wall.2} + \min(B_{bot.2}, d_{slope.2}) \cdot \tan(\beta)) = 12.138\,ft$

$h_{backfill.3} := \max(h_{wall.3}, h_{wall.3} + \min(B_{bot.3}, d_{slope.3}) \cdot \tan(\beta)) = 2.195\,ft$

The height of backfill is taken at the end of the reinforced soil mass.

External Stability Analysis at Anchor 1

Calculate Vertical Loads and Associated Lever Arms ***(All Lever Arms are from Point "O")***

$DC_{wall.1} := t_{wall} \cdot h_{wall.1} \cdot \gamma_c = 1.272 \cdot \frac{kip}{ft}$

$x_{DC.wall.1} := \frac{1}{2} t_{wall} = 0.417\,ft$

$EV1a_1 := \frac{1}{2} \gamma_s \cdot (h_{backfill.1} - h_{wall.1}) \cdot (d_{slope.1}) = 0.787 \cdot \frac{kip}{ft}$

$x_{EV1a.1} := t_{wall} + \frac{2}{3} d_{slope.1} = 4.248\,ft$

$EV1b_1 := \gamma_s \cdot (h_{backfill.1} - h_{wall.1}) \cdot (B_{bot.1} - d_{slope.1}) = 0 \cdot \frac{kip}{ft}$

$x_{EV1b.1} := t_{wall} + d_{slope.1} + \frac{1}{2}(B_{bot.1} - d_{slope.1}) = 5.955\,ft$

$EV2_1 := \gamma_s \cdot (h_{wall.1} - 3.5ft) \cdot B_{bot.1} = 4.786 \cdot \frac{kip}{ft}$

$x_{EV2.1} := t_{wall} + \frac{1}{2} B_{bot.1} = 3.394\,ft$

$EV3_1 := \gamma_s \cdot (3.5ft) \cdot \left(B_{bot.lower.1} - \frac{7in}{\cos(30deg)}\right) = 1.143 \cdot \frac{kip}{ft}$

$x_{EV3.1} := t_{wall} + \frac{1}{2}\left(B_{bot.lower.1} - \frac{7in}{\cos(30deg)}\right) = 2\,ft$

$$EV4_1 := \gamma_s \cdot \frac{1}{2} \cdot 3.5ft \cdot \left[\left(W_1 + 3ft + 5.375in \right) - \left(B_{bot.lower.1} - \frac{7in}{\cos(30deg)} \right) \right] = 0.518 \cdot \frac{kip}{ft}$$

$$x_{EV4.1} := t_{wall} + B_{bot.lower.1} + \frac{1}{3} \cdot \left[W_1 + 3ft + 5.375in - \left(B_{bot.lower.1} - \frac{7in}{\cos(30deg)} \right) \right] = 4.545\,ft$$

$$DC_{anchor.1} := \frac{1}{trib_1} \cdot \begin{cases} (1740lbf) & \text{if } AnchorType_1 = \text{"B"} \\ (2010lbf) & \text{if } AnchorType_1 = \text{"C"} \\ (2285lbf) & \text{if } AnchorType_1 = \text{"D"} \\ (2550lbf) & \text{if } AnchorType_1 = \text{"E"} \end{cases} = 0.536 \cdot \frac{kip}{ft}$$

(See Anchor Geometry Drawing)

$$x_{anchor.1} := t_{wall} + \begin{cases} (2ft + 2.25in) & \text{if } AnchorType_1 = \text{"B"} \\ (2ft + 8.8125in) & \text{if } AnchorType_1 = \text{"C"} \\ (3ft + 5.125in) & \text{if } AnchorType_1 = \text{"D"} \\ (4ft + 0.0625in) & \text{if } AnchorType_1 = \text{"E"} \end{cases} = 3.568 \cdot ft$$

$$LS_{vert.1} := \begin{cases} \left[q_{sur} \cdot \left[B_{bot.1} - \left(d_{traffic.1} \right) \right] \right] & \text{if } d_{traffic.1} < B_{bot.1} \\ 0 & \text{otherwise} \end{cases} = 0 \cdot \frac{kip}{ft}$$

Used in bearing calcs only

$$x_{LS.vert.1} := t_{wall} + d_{traffic.1} + \frac{1}{2} \left(B_{bot.1} - d_{traffic.1} \right) = 9.145\,ft$$

$$DC_{ftg.1} := \gamma_c \cdot t_{ftg} \cdot h_{ftg} = 1.425 \cdot \frac{kip}{ft}$$

$$x_{DC.ftg.1} := \frac{t_{ftg}}{2} = 1.5\,ft$$

Note: This moment arm is measured from the front toe of the ftg since it is only used in bearing calculations.

Calculate Lateral Loads and Associated Lever Arms

$$EH1_{1.vert} := \frac{1}{2} k_{a.wall} \cdot \gamma_s \cdot \left(h_{backfill.1} - 3.5ft \right)^2 \cdot \sin\left(\delta_{wall} \right) = 0.869 \cdot \frac{kip}{ft}$$

$$EH1_{1.hor} := \frac{1}{2} k_{a.wall} \cdot \gamma_s \cdot \left(h_{backfill.1} - 3.5ft \right)^2 \cdot \cos\left(\delta_{wall} \right) = 1.822 \cdot \frac{kip}{ft}$$

$$x_{EH1.1} := t_{wall} + B_{bot.1} = 5.955\,ft$$

$$y_{EH1.1} := 3.5ft + \frac{1}{3} \left(h_{backfill.1} - 3.5ft \right) = 6.456\,ft$$

$$EH2_{1.vert} := k_{a.anchor} \cdot \gamma_s \cdot \left(h_{backfill.1} - 3.5ft \right) \cdot (4ft) \cdot \sin\left(\delta_{anchor} - 30deg \right) = -0.131 \cdot \frac{kip}{ft}$$

$$EH2_{1.hor} := k_{a.anchor} \cdot \gamma_s \cdot (h_{backfill.1} - 3.5ft) \cdot (4ft) \cdot \cos(\delta_{anchor} - 30deg) = 0.566 \cdot \frac{kip}{ft}$$

$$x_{EH2.1} := t_{wall} + \frac{1}{2}(B_{bot.1} + B_{bot.lower.1}) = 4.898\,ft$$

$$y_{EH2.1} := 3.5ft - \frac{1}{2} \cdot 4ft = 1.5\,ft$$

$$EH3_{1.vert} := \frac{1}{2} k_{a.anchor} \cdot \gamma_s \cdot (4ft)^2 \cdot \sin(\delta_{anchor} - 30deg) = -0.029 \cdot \frac{kip}{ft}$$

$$EH3_{1.hor} := \frac{1}{2} k_{a.anchor} \cdot \gamma_s \cdot (4ft)^2 \cdot \cos(\delta_{anchor} - 30deg) = 0.128 \cdot \frac{kip}{ft}$$

$$x_{EH3.1} := t_{wall} + B_{bot.lower.1} + \left(3.5ft - \frac{2}{3} \cdot 4ft\right) \tan(30deg) = 4.321\,ft$$

$$y_{EH3.1} := 3.5ft - \frac{2}{3} \cdot 4ft = 10 \cdot in$$

$$LS_{hor.1} := \begin{cases} (k_{a.wall} \cdot q_{sur} \cdot h_{backfill.1}) & \text{if } d_{traffic.1} < \frac{h_{wall.1}}{2} \\ 0 & \text{otherwise} \end{cases} = 0 \cdot \frac{kip}{ft}$$

$$x_{LS.hor.1} := t_{wall} + \frac{1}{2}(B_{bot.lower.1} + B_{bot.1}) = 4.898\,ft$$ (Assumed for ease of calculation)

$$y_{LS.hor.1} := \frac{1}{2} h_{backfill.1} = 6.185\,ft$$

Check Sliding

Per AASHTO 11.11.4.2, Sliding shall be evaluated according to 10.6.3.4. Per 11.5.3, sliding shall be evaluated at the strength limit state. Use minimum load factors for vertical loads and maximum load factors for horizontal loads. Assume the failure plane is beneath the wall ftg, which will be grouted to the wall during construction. This is consistent with assumptions in the HITEC report (page D24).

Resisting Forces

$$\phi_\tau := 0.9$$ AASHTO Table 10.5.5.2.2-1, "Precast on Sand" or "Soil on Soil"

$$\Sigma V_1 := 0.9(DC_{wall.1} + DC_{anchor.1} + DC_{ftg.1}) + 1.0 \cdot (EV1a_1 + EV1b_1 + EV2_1 + EV3_1 + EV4_1) \ldots + \eta_i \cdot 1.50 \cdot (EH1_{1.vert} + EH2_{1.vert} + EH3_{1.vert}) = 11.207 \cdot \frac{kip}{ft}$$

$$R_{\tau.1} := 0.8 \cdot \tan(\phi_{ftg}) \cdot \Sigma V_1 = 6.278 \cdot \frac{kip}{ft}$$ AASHTO 10.6.3.4

$$\boxed{R_{r.1} := \phi_\tau \cdot R_{\tau.1} = 5.65 \cdot \frac{kip}{ft}}$$

Designed By: PJL
Checked By:
Date Printed: 3/26/2015

Renaud Brothers, #5779
12x5 BCwTS - WW2
Bridge 47
Winhall, VT

Driving Forces

$$\Sigma H_{\tau.1} := \eta_i \cdot \left[1.50 \cdot \left(EH1_{1.hor} + EH2_{1.hor} + EH3_{1.hor}\right) + 1.75 LS_{hor.1}\right] = 3.774 \cdot \frac{kip}{ft}$$

$$Check_{sliding.1} := \begin{cases} \text{"OK"} & \text{if } \frac{R_{r.1}}{\Sigma H_{\tau.1}} \geq 1 \\ \text{"NG"} & \text{otherwise} \end{cases} = \text{"OK"}$$

Check Overturning and Eccentricity

Per AASHTO 11.11.4.4, Overturning shall be evaluated according to 11.6.3.3. A maximum of 80% of the retained soil shall be used to resist overturning. Per 11.6.3.3, evaluate overturning and eccentricity at the strength limit state using maximum load factors for horizontal loads and minimum load factors for vertical loads. First, evaluate eccentricity at the base of the panel. Second, evaluate eccentricity at the base of the footing. The location of the resultant of the reaction forces shall be located within the middle half of the base width (panel width plus anchor projection for case 1; footing width plus anchor projection for case 2). Eccentricity is measured from the center of the base width toward the stream side of the footing. Assume that a negative eccentricity (beyond the center of the base, toward the backfill) is acceptable since this condition will engage passive earth pressures.

Resisting Forces

$$\begin{aligned} Resisting_1 := {} & 0.9\left(DC_{wall.1} \cdot x_{DC.wall.1} + DC_{anchor.1} \cdot x_{anchor.1}\right) \ldots \\ & + 1.0 \cdot 0.8 \cdot \left(EV1a_1 \cdot x_{EV1a.1} + EV1b_1 \cdot x_{EV1b.1} + EV2_1 \cdot x_{EV2.1} + EV3_1 \cdot x_{EV3.1} + EV4_1 \cdot x_{EV4.1}\right) \ldots \\ & + 1.50\left(EH1_{1.vert} \cdot x_{EH1.1} + EH2_{1.vert} \cdot x_{EH2.1} + EH3_{1.vert} \cdot x_{EH3.1}\right) \end{aligned} = 28.192 \cdot \frac{kip \cdot ft}{ft}$$

Driving Forces

$$Driving_1 := 1.50 \cdot \left(EH1_{1.hor} \cdot y_{EH1.1} + EH2_{1.hor} \cdot y_{EH2.1} + EH3_{1.hor} \cdot y_{EH3.1}\right) + 1.75 LS_{hor.1} \cdot y_{LS.hor.1} = 19.081 \cdot \frac{kip \cdot ft}{ft}$$

$$Check_{OT.1} := \begin{cases} \text{"OK"} & \text{if } \frac{Resisting_1}{Driving_1} \geq 1 \\ \text{"NG"} & \text{otherwise} \end{cases} = \text{"OK"}$$

$$\begin{aligned} \Sigma V_{e.1} := {} & 0.9\left(DC_{wall.1} + DC_{anchor.1}\right) + 1.0 \cdot 0.8 \cdot \left(EV1a_1 + EV1b_1 + EV2_1 + EV3_1 + EV4_1\right) \ldots \\ & + 1.50\left(EH1_{1.vert} + EH2_{1.vert} + EH3_{1.vert}\right) \end{aligned} = 8.478 \cdot \frac{kip}{ft}$$

Case 1: Eccentricity of Resultant without footing

$$l_{case1.1} := \frac{\left(Resisting_1 - Driving_1\right)}{\Sigma V_{e.1}} = 1.075\,ft$$ (Distance to resultant from face of wall)

$$B_{case1.1} := B_{bot.lower.1} + t_{wall} = 3.84\,ft$$

$$e_{case1.1} := \max\left(\frac{B_{case1.1}}{2} - l_{case1.1}, 0ft\right) = 0.845\,ft$$

$$e_{allow.case1.1} := \frac{B_{case1.1}}{4} = 0.96\,ft$$ (Within Middle Half per AASHTO 11.6.3.3)

$$Check_{e.case1.1} := \begin{cases} "OK" & \text{if } \frac{e_{case1.1}}{e_{allow.case1.1}} \le 1 \\ "NG" & \text{otherwise} \end{cases} = "OK"$$

Case 2: Eccentricity of Resultant with footing

$$l_1 := \frac{\left[\Sigma V_{e.1} \cdot \left[\frac{\left(Resisting_1 - Driving_1\right)}{\Sigma V_{e.1}} + \frac{1}{2}\left(t_{ftg} - t_{wall}\right)\right] + 0.9DC_{ftg.1} \cdot x_{DC.ftg.1}\right]}{\Sigma V_{e.1} + 0.9DC_{ftg.1}} = 2.072\,ft$$ (Distance to resultant from face of ftg)

$$B_1 := B_{bot.lower.1} + t_{wall} + \frac{1}{2}\left(t_{ftg} - t_{wall}\right) = 4.924\,ft$$

$$e_1 := \max\left(\frac{B_1}{2} - l_1, 0ft\right) = 0.39\,ft$$

$$e_{allow.1} := \frac{B_1}{4} = 1.231\,ft$$ (Within Middle Half of ftg per AASHTO 11.6.3.3)

$$Check_{e.1} := \begin{cases} "OK" & \text{if } \frac{e_1}{e_{allow.1}} \le 1 \\ "NG" & \text{otherwise} \end{cases} = "OK"$$

Check Bearing Pressure

Per 11.11.4.3 Evaluate bearing pressure with respect to resistance calculated in 10.6.3. Per HITEC p. D24, use the horizontal portion of the anchor at its base plus the footing width. Evaluate at the strength limit state. Use 100% of the weight of the retained soil. When Live Load Surcharge is present, Strength I with maximum load factors for vertical loads

and horizontal loads controls. Include the effects of live load surcharge. Since lever arms are calculated from the front face of the wall, must add to the eccentricity the distance between wall and toe of footing.

$$Resisting_{brg.1} := 1.25\left(DC_{wall.1}\cdot x_{DC.wall.1} + DC_{anchor.1}\cdot x_{anchor.1}\right) \ldots + 1.35\cdot\left(EV1a_1\cdot x_{EV1a.1} + EV1b_1\cdot x_{EV1b.1} + EV2_1\cdot x_{EV2.1} + EV3_1\cdot x_{EV3.1} + EV4_1\cdot x_{EV4.1}\right) \ldots + 1.35\left(EH1_{1.vert}\cdot x_{EH1.1} + EH2_{1.vert}\cdot x_{EH2.1} + EH3_{1.vert}\cdot x_{EH3.1}\right) \ldots + 1.75\cdot\left(LS_{vert.1}\cdot x_{LS.vert.1}\right) = 41.71\cdot\frac{kip\cdot ft}{ft}$$

$$Driving_{brg.1} := 1.35\left(EH1_{1.hor}\cdot y_{EH1.1} + EH2_{1.hor}\cdot y_{EH2.1} + EH3_{1.hor}\cdot y_{EH3.1}\right) + 1.75LS_{hor.1}\cdot y_{LS.hor.1} = 17.173\cdot\frac{kip\cdot ft}{ft}$$

$$\Sigma V_{brg.1} := 1.25\cdot\left(DC_{wall.1} + DC_{anchor.1}\right) + 1.35\cdot\left(EV1a_1 + EV1b_1 + EV2_1 + EV3_1 + EV4_1\right) \ldots + 1.35\cdot\left(EH1_{1.vert} + EH2_{1.vert} + EH3_{1.vert}\right) + 1.75\cdot\left(LS_{vert.1}\right) = 12.983\cdot\frac{kip}{ft}$$

$$l_{brg.1} := \frac{\left[\Sigma V_{brg.1}\cdot\left[\frac{\left(Resisting_{brg.1} - Driving_{brg.1}\right)}{\Sigma V_{brg.1}} + \frac{1}{2}\left(t_{ftg} - t_{wall}\right)\right] + 1.25DC_{ftg.1}\cdot x_{DC.ftg.1}\right]}{\Sigma V_{brg.1} + 1.25DC_{ftg.1}} = 2.796\,ft$$

(Distance to resultant from face of ftg)

$$e_{brg.1} := \max\left(\frac{B_1}{2} - l_{brg.1}, 0ft\right) = 0\,ft$$

$$\sigma_{foot.1} := \frac{\Sigma V_{brg.1}}{B_1 - 2\cdot e_{brg.1}} = 2.637\cdot ksf$$

Eq. 11.6.3.2-1, Rectangular Distibution for Foundations on soil

$$q_R = 6\cdot ksf$$

$$CheckBearing_1 := \begin{cases} \text{"OK"} & \text{if } \frac{q_R}{\sigma_{foot.1}} \geq 1 \\ \text{"NG"} & \text{otherwise} \end{cases} = \text{"OK"}$$

External Stability Analysis at Anchor 2

Calculate Vertical Loads and Associated Lever Arms ***(All Lever Arms are from Point "O")***

$$DC_{wall.2} := t_{wall}\cdot h_{wall.2}\cdot\gamma_c = 1.243\cdot\frac{kip}{ft}$$

$$x_{DC.wall.2} := \frac{1}{2}t_{wall} = 0.417\,ft$$

$$EV1a_2 := \frac{1}{2}\gamma_s \cdot \left(h_{backfill.2} - h_{wall.2}\right)\cdot\left(d_{slope.2}\right) = 0.787\cdot\frac{kip}{ft}$$

$$x_{EV1a.2} := t_{wall} + \frac{2}{3}d_{slope.2} = 4.248\,ft$$

$$EV1b_2 := \gamma_s \cdot \left(h_{backfill.2} - h_{wall.2}\right)\cdot\left(B_{bot.2} - d_{slope.2}\right) = 0\cdot\frac{kip}{ft}$$

$$x_{EV1b.2} := t_{wall} + d_{slope.2} + \frac{1}{2}\left(B_{bot.2} - d_{slope.2}\right) = 5.955\,ft$$

$$EV2_2 := \gamma_s \cdot \left(h_{wall.2} - 3.5ft\right)\cdot B_{bot.2} = 4.62\cdot\frac{kip}{ft}$$

$$x_{EV2.2} := t_{wall} + \frac{1}{2}B_{bot.2} = 3.394\,ft$$

$$EV3_2 := \gamma_s \cdot (3.5ft)\cdot\left(B_{bot.lower.2} - \frac{7in}{\cos(30deg)}\right) = 1.143\cdot\frac{kip}{ft}$$

$$x_{EV3.2} := t_{wall} + \frac{1}{2}\left(B_{bot.lower.2} - \frac{7in}{\cos(30deg)}\right) = 2\,ft$$

$$EV4_2 := \gamma_s \cdot \frac{1}{2}\cdot 3.5ft\cdot\left[\left(W_2 + 3ft + 5.375in\right) - \left(B_{bot.lower.2} - \frac{7in}{\cos(30deg)}\right)\right] = 0.518\cdot\frac{kip}{ft}$$

$$x_{EV4.2} := t_{wall} + B_{bot.lower.2} + \frac{1}{3}\cdot\left[W_2 + 3ft + 5.375in - \left(B_{bot.lower.2} - \frac{7in}{\cos(30deg)}\right)\right] = 4.545\,ft$$

$$DC_{anchor.2} := \frac{1}{trib_2}\cdot \begin{cases} (1740lbf) & \text{if } AnchorType_2 = \text{"B"} \\ (2010lbf) & \text{if } AnchorType_2 = \text{"C"} \\ (2285lbf) & \text{if } AnchorType_2 = \text{"D"} \\ (2550lbf) & \text{if } AnchorType_2 = \text{"E"} \end{cases} = 0.322\cdot\frac{kip}{ft}$$

(See Anchor Geometry Drawing)

$$x_{anchor.2} := t_{wall} + \begin{cases} (2ft + 2.25in) & \text{if } AnchorType_2 = \text{"B"} \\ (2ft + 8.8125in) & \text{if } AnchorType_2 = \text{"C"} \\ (3ft + 5.125in) & \text{if } AnchorType_2 = \text{"D"} \\ (4ft + 0.0625in) & \text{if } AnchorType_2 = \text{"E"} \end{cases} = 3.568\cdot ft$$

$$LS_{vert.2} := \begin{cases} \left[q_{sur}\cdot\left[B_{bot.2} - \left(d_{traffic.2}\right)\right]\right] & \text{if } d_{traffic.2} < B_{bot.2} \\ 0 & \text{otherwise} \end{cases} = 0\cdot\frac{kip}{ft}$$

Used in bearing calcs only

$$x_{LS.vert.2} := t_{wall} + d_{traffic.2} + \frac{1}{2}\left(B_{bot.2} - d_{traffic.2}\right) = 9.896\,ft$$

$$DC_{ftg.2} := \gamma_c \cdot t_{ftg} \cdot h_{ftg} = 1.425 \cdot \frac{kip}{ft}$$

$$x_{DC.ftg.2} := \frac{t_{ftg}}{2} = 1.5\,ft$$

Note: This moment arm is measured from the front toe of the ftg since it is only used in bearing calculations.

Calculate Lateral Loads and Associated Lever Arms

$$EH1_{2.vert} := \frac{1}{2} k_{a.wall} \cdot \gamma_s \cdot \left(h_{backfill.2} - 3.5ft\right)^2 \cdot \sin\left(\delta_{wall}\right) = 0.824 \cdot \frac{kip}{ft}$$

$$EH1_{2.hor} := \frac{1}{2} k_{a.wall} \cdot \gamma_s \cdot \left(h_{backfill.2} - 3.5ft\right)^2 \cdot \cos\left(\delta_{wall}\right) = 1.728 \cdot \frac{kip}{ft}$$

$$x_{EH1.2} := t_{wall} + B_{bot.2} = 5.955\,ft$$

$$y_{EH1.2} := 3.5ft + \frac{1}{3}\left(h_{backfill.2} - 3.5ft\right) = 6.379\,ft$$

$$EH2_{2.vert} := k_{a.anchor} \cdot \gamma_s \cdot \left(h_{backfill.2} - 3.5ft\right) \cdot (4ft) \cdot \sin\left(\delta_{anchor} - 30deg\right) = -0.127 \cdot \frac{kip}{ft}$$

$$EH2_{2.hor} := k_{a.anchor} \cdot \gamma_s \cdot \left(h_{backfill.2} - 3.5ft\right) \cdot (4ft) \cdot \cos\left(\delta_{anchor} - 30deg\right) = 0.551 \cdot \frac{kip}{ft}$$

$$x_{EH2.2} := t_{wall} + \frac{1}{2}\left(B_{bot.2} + B_{bot.lower.2}\right) = 4.898\,ft$$

$$y_{EH2.2} := 3.5ft - \frac{1}{2} \cdot 4ft = 1.5\,ft$$

$$EH3_{2.vert} := \frac{1}{2} k_{a.anchor} \cdot \gamma_s \cdot (4ft)^2 \cdot \sin\left(\delta_{anchor} - 30deg\right) = -0.029 \cdot \frac{kip}{ft}$$

$$EH3_{2.hor} := \frac{1}{2} k_{a.anchor} \cdot \gamma_s \cdot (4ft)^2 \cdot \cos\left(\delta_{anchor} - 30deg\right) = 0.128 \cdot \frac{kip}{ft}$$

$$x_{EH3.2} := t_{wall} + B_{bot.lower.2} + \left(3.5ft - \frac{2}{3} \cdot 4ft\right) \tan(30deg) = 4.321\,ft$$

$$y_{EH3.2} := 3.5ft - \frac{2}{3} \cdot 4ft = 10 \cdot in$$

$$LS_{hor.2} := \begin{cases} \left(k_{a.wall} \cdot q_{sur} \cdot h_{backfill.2}\right) & \text{if } d_{traffic.2} < \frac{h_{wall.2}}{2} \\ 0 & \text{otherwise} \end{cases} = 0 \cdot \frac{kip}{ft}$$

$$x_{LS.hor.2} := t_{wall} + \frac{1}{2}\left(B_{bot.lower.2} + B_{bot.2}\right) = 4.898\,ft$$

(Assumed for ease of calculation)

$$y_{LS.hor.2} := \frac{1}{2} h_{backfill.2} = 6.069\,ft$$

Check Sliding

Per AASHTO 11.11.4.2, Sliding shall be evaluated according to 10.6.3.4. Per 11.5.3, sliding shall be evaluated at the strength limit state. Use minimum load factors for vertical loads and maximum load factors for horizontal loads. Assume the failure plane is beneath the wall ftg, which will be grouted to the wall during construction. This is consistent with assumptions in the HITEC report (page D24).

Resisting Forces

$\phi_\tau := 0.9$ AASHTO Table 10.5.5.2.2-1, "Precast on Sand" or "Soil on Soil"

$$\Sigma V_2 := 0.9\left(DC_{wall.2} + DC_{anchor.2} + DC_{ftg.2}\right) + 1.0\cdot\left(EV1a_2 + EV1b_2 + EV2_2 + EV3_2 + EV4_2\right) \ldots = 10.76\cdot\frac{kip}{ft}$$
$$+\eta_i\cdot 1.50\cdot\left(EH1_{2.vert} + EH2_{2.vert} + EH3_{2.vert}\right)$$

$$R_{\tau.2} := 0.8\cdot\tan\left(\phi_{ftg}\right)\cdot\Sigma V_2 = 6.027\cdot\frac{kip}{ft}$$ AASHTO 10.6.3.4

$$\boxed{R_{r.2} := \phi_\tau\cdot R_{\tau.2} = 5.425\cdot\frac{kip}{ft}}$$

Driving Forces

$$\Sigma H_{\tau.2} := \eta_i\cdot\left[1.50\cdot\left(EH1_{2.hor} + EH2_{2.hor} + EH3_{2.hor}\right) + 1.75LS_{hor.2}\right] = 3.611\cdot\frac{kip}{ft}$$

$$Check_{sliding.2} := \begin{cases} \text{"OK"} & \text{if } \dfrac{R_{r.2}}{\Sigma H_{\tau.2}} \geq 1 \\ \text{"NG"} & \text{otherwise} \end{cases} = \text{"OK"}$$

Check Overturning and Eccentricity

Per AASHTO 11.11.4.4, Overturning shall be evaluated according to 11.6.3.3. A maximum of 80% of the retained soil shall be used to resist overturning. Per 11.6.3.3, evaluate overturning and eccentricity at the strength limit state using maximum load factors for horizontal loads and minimum load factors for vertical loads. First, evaluate eccentricity at the base of the panel. Second, evaluate eccentricity at the base of the footing. The location of the resultant of the reaction forces shall be located within the middle half of the base width (panel width plus anchor projection for case 1; footing width plus anchor projection for case 2). Eccentricity is measured from the center of the base width toward the stream side of the footing. Assume that a negative eccentricity (beyond the center of the base, toward the backfill) is acceptable since this condition will engage passive earth pressures.

Resisting Forces

$$Resisting_2 := 0.9\left(DC_{wall.2} \cdot x_{DC.wall.2} + DC_{anchor.2} \cdot x_{anchor.2}\right) \ldots + 1.0 \cdot 0.8 \cdot \left(EV1a_2 \cdot x_{EV1a.2} + EV1b_2 \cdot x_{EV1b.2} + EV2_2 \cdot x_{EV2.2} + EV3_2 \cdot x_{EV3.2} + EV4_2 \cdot x_{EV4.2}\right) \ldots + 1.50\left(EH1_{2.vert} \cdot x_{EH1.2} + EH2_{2.vert} \cdot x_{EH2.2} + EH3_{2.vert} \cdot x_{EH3.2}\right) = 26.667 \cdot \frac{kip \cdot ft}{ft}$$

Driving Forces

$$Driving_2 := 1.50 \cdot \left(EH1_{2.hor} \cdot y_{EH1.2} + EH2_{2.hor} \cdot y_{EH2.2} + EH3_{2.hor} \cdot y_{EH3.2}\right) + 1.75 LS_{hor.2} \cdot y_{LS.hor.2} = 17.939 \cdot \frac{kip \cdot ft}{ft}$$

$$Check_{OT.2} := \begin{cases} \text{"OK"} & \text{if } \frac{Resisting_2}{Driving_2} \geq 1 \\ \text{"NG"} & \text{otherwise} \end{cases} = \text{"OK"}$$

$$\Sigma V_{e.2} := 0.9\left(DC_{wall.2} + DC_{anchor.2}\right) + 1.0 \cdot 0.8 \cdot \left(EV1a_2 + EV1b_2 + EV2_2 + EV3_2 + EV4_2\right) \ldots + 1.50\left(EH1_{2.vert} + EH2_{2.vert} + EH3_{2.vert}\right) = 8.064 \cdot \frac{kip}{ft}$$

Case 1: Eccentricity of Resultant without footing

$$l_{case1.2} := \frac{\left(Resisting_2 - Driving_2\right)}{\Sigma V_{e.2}} = 1.082\,ft$$ (Distance to resultant from face of wall)

$$B_{case1.2} := B_{bot.lower.2} + t_{wall} = 3.84\,ft$$

$$e_{case1.2} := \max\left(\frac{B_{case1.2}}{2} - l_{case1.2}, 0ft\right) = 0.838\,ft$$

$$e_{allow.case1.2} := \frac{B_{case1.2}}{4} = 0.96\,ft$$ (Within Middle Half per AASHTO 11.6.3.3)

$$Check_{e.case1.2} := \begin{cases} \text{"OK"} & \text{if } \frac{e_{case1.2}}{e_{allow.case1.2}} \leq 1 \\ \text{"NG"} & \text{otherwise} \end{cases} = \text{"OK"}$$

Case 2: Eccentricity of Resultant with footing

$$l_2 := \frac{\left[\Sigma V_{e.2}\cdot\left[\frac{\left(Resisting_2 - Driving_2\right)}{\Sigma V_{e.2}} + \frac{1}{2}\left(t_{ftg} - t_{wall}\right)\right] + 0.9DC_{ftg.2}\cdot x_{DC.ftg.2}\right]}{\Sigma V_{e.2} + 0.9DC_{ftg.2}} = 2.074\,ft$$

(Distance to resultant from face of ftg)

$$B_2 := B_{bot.lower.2} + t_{wall} + \frac{1}{2}\left(t_{ftg} - t_{wall}\right) = 4.924\,ft$$

$$e_2 := \max\left(\frac{B_2}{2} - l_2, 0ft\right) = 0.387\,ft$$

$$e_{allow.2} := \frac{B_2}{4} = 1.231\,ft$$

(Within Middle Half of ftg per AASHTO 11.6.3.3)

$$Check_{e.2} := \begin{cases} \text{"OK"} & \text{if } \frac{e_2}{e_{allow.2}} \le 1 \\ \text{"NG"} & \text{otherwise} \end{cases} = \text{"OK"}$$

Check Bearing Pressure

Per 11.11.4.3 Evaluate bearing pressure with respect to resistance calculated in 10.6.3. Per HITEC p. D24, use the horizontal portion of the anchor at its base plus the footing width. Evaluate at the strength limit state. Use 100% of the weight of the retained soil. When Live Load Surcharge is present, Strength I with maximum load factors for vertical loads and horizontal loads controls. Include the effects of live load surcharge. Since lever arms are calculated from the front face of the wall, must add to the eccentricity the distance between wall and toe of footing.

$$\begin{aligned} Resisting_{brg.2} := {} & 1.25\left(DC_{wall.2}\cdot x_{DC.wall.2} + DC_{anchor.2}\cdot x_{anchor.2}\right) \ldots \\ & + 1.35\cdot\left(EV1a_2\cdot x_{EV1a.2} + EV1b_2\cdot x_{EV1b.2} + EV2_2\cdot x_{EV2.2} + EV3_2\cdot x_{EV3.2} + EV4_2\cdot x_{EV4.2}\right) \ldots \\ & + 1.35\left(EH1_{2.vert}\cdot x_{EH1.2} + EH2_{2.vert}\cdot x_{EH2.2} + EH3_{2.vert}\cdot x_{EH3.2}\right) \ldots \\ & + 1.75\cdot\left(LS_{vert.2}\cdot x_{LS.vert.2}\right) \end{aligned} = 39.641\cdot\frac{kip\cdot ft}{ft}$$

$$Driving_{brg.2} := 1.35\left(EH1_{2.hor}\cdot y_{EH1.2} + EH2_{2.hor}\cdot y_{EH2.2} + EH3_{2.hor}\cdot y_{EH3.2}\right) + 1.75LS_{hor.2}\cdot y_{LS.hor.2} = 16.145\cdot\frac{kip\cdot ft}{ft}$$

$$\begin{aligned} \Sigma V_{brg.2} := {} & 1.25\cdot\left(DC_{wall.2} + DC_{anchor.2}\right) + 1.35\cdot\left(EV1a_2 + EV1b_2 + EV2_2 + EV3_2 + EV4_2\right) \ldots \\ & + 1.35\cdot\left(EH1_{2.vert} + EH2_{2.vert} + EH3_{2.vert}\right) + 1.75\cdot\left(LS_{vert.2}\right) \end{aligned} = 12.399\cdot\frac{kip}{ft}$$

$$l_{brg.2} := \frac{\left[\Sigma V_{brg.2}\cdot\left[\frac{\left(Resisting_{brg.2} - Driving_{brg.2}\right)}{\Sigma V_{brg.2}} + \frac{1}{2}\left(t_{ftg} - t_{wall}\right)\right] + 1.25DC_{ftg.2}\cdot x_{DC.ftg.2}\right]}{\Sigma V_{brg.2} + 1.25DC_{ftg.2}} = 2.793\,ft$$

(Distance to resultant from face of ftg)

$$e_{brg.2} := \max\left(\frac{B_2}{2} - l_{brg.2}, 0ft\right) = 0\,ft$$

$$\sigma_{foot.2} := \frac{\Sigma V_{brg.2}}{B_2 - 2 \cdot e_{brg.2}} = 2.518 \cdot ksf$$

Eq. 11.6.3.2-1, Rectangular Distibution for Foundations on soil

$$q_R = 6 \cdot ksf$$

$$CheckBearing_2 := \begin{cases} \text{"OK"} & \text{if } \frac{q_R}{\sigma_{foot.2}} \geq 1 \\ \text{"NG"} & \text{otherwise} \end{cases} = \text{"OK"}$$

Check Wall Reinforcement

Assume the wall stem is cantilevered above the anchor. Use tallest wall section above anchor. Use maximum horizontal load factors to calculate moments and shears. Use minimum load factor for axial compression.

Calculate Horizontal Loads and resp. Lever Arms at top of Anchor

$$h_{wall.internal} := h_{backfill.1} - 3.5ft = 8.869\,ft$$

$$EH_{wall} := \frac{1}{2} k_{a.wall} \cdot \gamma_s \cdot h_{wall.internal}^2 = 2.019 \cdot \frac{kip}{ft} \qquad y_{EH.wall} := \frac{1}{3} h_{wall.1} = 3.391\,ft$$

$$LS_{wall} := \begin{cases} 0 & \text{if } d_{traffic.1} \geq \frac{1}{2} \cdot h_{wall.1} \\ \left(k_{a.wall} \cdot q_{sur} \cdot h_{wall.internal}\right) & \text{otherwise} \end{cases} = 0 \cdot \frac{kip}{ft} \qquad y_{LS.wall} := \frac{1}{2} h_{wall.1} = 5.087\,ft$$

$$Mu_{wall} := \eta_i \cdot \left(1.5 \cdot EH_{wall} \cdot y_{EH.wall} + 1.75 LS_{wall} \cdot y_{LS.wall}\right) = 10.271 \cdot \frac{kip \cdot ft}{ft}$$

$$Vu_{wall} := \eta_i \cdot \left(1.5 EH_{wall} + 1.75 LS_{wall}\right) = 3.028 \cdot \frac{kip}{ft}$$

$$Nu_{wall} := -\eta_i \cdot \left(0.9 \cdot \gamma_c \cdot t_{wall} \cdot h_{wall.internal}\right) = -0.998 \cdot \frac{kip}{ft}$$

Check Moment Capacity

$bar_{wall} := 5$ $\qquad s_{wall} := 12in$ $\qquad cover_{wall} := 1.5in$

$b_w := 1ft$

$$diam_{wall} := \frac{bar_{wall}}{8} in = 0.625 \cdot in$$

$$As_{wall} := \frac{\pi \cdot diam_{wall}^2}{4} \cdot 12 \frac{in}{s_{wall}} = 0.307 \cdot in^2$$

$$d_{wall} := t_{wall} - cover_{wall} - \frac{diam_{wall}}{2} = 8.188 \cdot in$$

$\phi_{moment} := 0.90$ Per AASHTO 5.5.4.2.1

$\phi_{shear} := 0.90$ Per AASHTO 5.5.4.2.1

Verify that f_y can be substituted for f_s in the equations of 5.7.3.2. This is allowed when $\frac{c}{d_s} \le 0.60$.

$$c_{wall} := \frac{As_{wall} \cdot f_y}{0.85 \cdot f_c \cdot \beta_1 \cdot b_w} = 0.451 \cdot in$$

Simplified equation 5.7.3.1.2-4

$$\frac{c_{wall}}{d_{wall}} = 0.055$$

This is less than 0.60 therefore f_y can be substituted for f_s

$$a_{wall} := \beta_1 \cdot c_{wall} = 0.361 \cdot in$$

$$Mn_{wall} := As_{wall} \cdot f_y \cdot \left(d_{wall} - \frac{a_{wall}}{2} \right)$$

$$Mr_{wall} := \phi_{moment} \cdot Mn_{wall} = 11.054 \cdot kip \cdot ft$$

$$Mu_{wall} \cdot b_w = 10.271 \cdot kip \cdot ft$$

$$Check_{WallFlexure} := \begin{cases} \text{"OK"} & \text{if } \frac{Mr_{wall}}{Mu_{wall} \cdot b_w} \ge 1 \\ \text{"NG"} & \text{otherwise} \end{cases} = \text{"OK"}$$

Check Minimum Flexural Reinforcement (5.7.3.3.2)

$f_r := 0.24 \cdot \sqrt{f_c \cdot ksi} = 0.537 \cdot ksi$ AASHTO 5.4.2.6

$$I_{g.wall} := \frac{1}{12} \cdot b_w \cdot t_{wall}^3 = 1 \times 10^3 \cdot in^4$$

$y_{t.wall} := \frac{t_{wall}}{2} = 5 \cdot in$ Distance from centroid to extreme tension fibers. Conservatively ignore reinforcement.

$S_{c.wall} := \frac{I_{g.wall}}{y_{t.wall}} = 200 \cdot in^3$

$\gamma_3 := 0.67$ 0.67 = Factor for Grade 60 ASTM A615 rebar

$\gamma_1 := 1.2$ 1.2 = Factor for precast segmental structures

$M_{cr.wall} := \gamma_3 \cdot \gamma_1 \cdot S_{c.wall} \cdot f_r = 7.191 \cdot kip \cdot ft$ Simplified AASHTO Eq 5.7.3.3.2-1

$1.33Mu_{wall} \cdot b_w = 13.66 \cdot kip \cdot ft$

$$Check_{MinSteelWall} := \begin{cases} \text{"OK"} & \text{if } Mr_{wall} \geq \min\left(1.33Mu_{wall} \cdot b_w, M_{cr.wall}\right) \\ \text{"NG"} & \text{otherwise} \end{cases} = \text{"OK"}$$

Shear Resistance at Bottom of Wall (Section 5.8.3.4.2)

The section contains less than the minimum transverse reinforcement specified in 5.8.2.5, therefore use equation 5.8.3.4.2-2 to determine the longitudinal strain effect factor (β) at the location of maximum shear.

$Mu := \max\left(Mu_{wall}, Vu_{wall} \cdot d_{wall}\right)$ In the eqtn below Mu shall not be less than $Vu \cdot d_v$

$$\xi_{s_wall} := \frac{\frac{|Mu|}{d_{wall}} + 0.5Nu_{wall} + |Vu_{wall}|}{E_s \cdot As_{wall}} \cdot b_w \qquad 1000 \cdot \xi_{s_wall} = 1.98 \qquad (5.8.3.4.2\text{-}4)$$

$s_{x_wall} := d_{wall}$

$$s_{xe_wall} := s_{x_wall} \cdot \frac{1.38in}{Aggregate_{diam} + 0.63in} = 8.187 \cdot in \qquad (5.8.3.4.2\text{-}5)$$

$$\beta_{wall} := \left(\frac{4.8}{1 + 750 \cdot \xi_{s_wall}}\right) \cdot \left(\frac{51}{39 + \frac{s_{xe_wall}}{1in}}\right) = 2.09 \qquad (5.8.3.4.2\text{-}2)$$

$$\Theta_{wall} := 29deg + 3500deg \cdot \xi_{s_wall} = 35.917 \cdot deg \qquad (5.8.3.4.2\text{-}3)$$

$$Vn_{wall} := \min\left(0.25 \cdot f_c \cdot b_w \cdot d_{wall}, 0.0316 \cdot \beta_{wall} \cdot \sqrt{f_c \cdot ksi} \cdot b_w \cdot d_{wall}\right) = 14.51 \cdot kip \qquad (5.8.3.3)$$

$Vr_{wall} := \phi_{shear} \cdot Vn_{wall} = 13.059 \cdot kip$

$Vu_{wall} \cdot b_w = 3.028 \cdot kip$

$$Check_{WallShear} := \begin{cases} \text{"OK"} & \text{if } \dfrac{Vr_{wall}}{Vu_{wall} \cdot b_w} \geq 1 \\ \text{"NG"} & \text{otherwise} \end{cases} = \text{"OK"}$$

Check Crack Control in Section 5.7.3.4

Stress in reinforcement calculated per MacGregor "Reinforced Concrete Mechanics and Design" 4th Ed

$$Ms_{wall} := \eta_i \cdot \left(1.0 \cdot EH_{wall} \cdot y_{EH.wall} + 1.0 LS_{wall} \cdot y_{LS.wall}\right) = 6.847 \cdot \frac{kip \cdot ft}{ft}$$

$$Ns_{wall} := -\eta_i \cdot \left(1.0 \cdot \gamma_c \cdot t_{wall} \cdot h_{wall.internal}\right) = -1.109 \cdot \frac{kip}{ft}$$

$$\eta := \frac{E_s}{E_c} = 7.118$$

$$\rho_{wall} := \frac{As_{wall}}{b_w \cdot d_{wall}} = 0.003$$

$$k := \sqrt{2\rho_{wall} + \left(\rho_{wall} \cdot \eta\right)^2} - \rho_{wall} \cdot \eta$$

$$j_{wall} := 1 - \frac{k}{3} = 0.98$$

$$fss_{wall} := \frac{Ms_{wall} + Ns_{wall} \cdot \left(d_{wall} - \frac{t_{wall}}{2}\right)}{As_{wall} \cdot j_{wall} \cdot d_{wall}} = 31.941 \cdot \frac{ksi}{ft}$$

Stress in Reinforcement at Service Limit State

$$d_{c_wall} := t_{wall} - d_{wall} = 1.813 \cdot in$$

$$\beta_s := 1 + \frac{d_{c_wall}}{0.7 \cdot \left(t_{wall} - d_{c_wall}\right)} = 1.316$$

$\gamma_e := 1.00$

exposure factor

$$s_{max} := \frac{700 \frac{kip}{in} \cdot \gamma_e}{\beta_s \cdot fss_{wall} \cdot b_w} - 2 \cdot d_{c_wall} = 13.025 \cdot in$$

$$Check_{MaxSpacing} := \begin{cases} \text{"OK"} & \text{if } s_{wall} \leq s_{max} \\ \text{"NG"} & \text{otherwise} \end{cases} = \text{"OK"}$$

Check Minimum Bar Spacing in Section 5.10.3.1.2:

$s_{min} := \max(diam_{wall}, 1.33Aggregate_{diam}, 1in) = 1 \cdot in$

$Check_{MinSpacing} := \begin{cases} "OK" & \text{if } s_{wall} \ge s_{min} \\ "NG" & \text{otherwise} \end{cases} = "OK"$

Check Maximum Bar Spacing in Section 5.10.3.2:

$s_{max} := \min(1.5 \cdot t_{wall}, 18in) = 15 \cdot in$

$Check_{MaxSpacing} := \begin{cases} "OK" & \text{if } s_{wall} \le s_{max} \\ "NG" & \text{otherwise} \end{cases} = "OK"$

Check Anchor Attachment to Wall

Check Moment Capacity of Connection Bars

Conservatively assume the entire wall is cantilevered about the footing, therefore consider only driving moments. Use total loads instead of loads per foot. Use 100% of soil weight. Must determine controlling anchor, since tributary width is variable, not necessarily the anchor at the tallest wall. Assume only top four connection bars resist tension. This assumption is consistent with HITEC p.D28.

$Mu_{anchor} := \max(Driving_{brg.1} \cdot trib_1, Driving_{brg.2} \cdot trib_2) = 100.904 \cdot kip \cdot ft$

$bar_{anchor} := 5$ size of bar

$diam_{anchor} := \frac{bar_{anchor}}{8} in = 0.625 \cdot in$

$As_{anchor} := \frac{\pi}{4} \cdot diam_{anchor}^2 = 0.307 \cdot in^2$

$n := 6$ Number of bars in tension

$b_{anchor} := t_{stem} = 6 \cdot in$ thickness of anchor stem

$h_{stem} := 3ft + 6in$ height of anchor stem

$d_{anchor} := 30.5in$ distance from centroid of tension reinforcement extreme compression fiber.

Verify that f_y can be substituted for f_s in the equations of 5.7.3.2. This is allowed when $\frac{c}{d_s} \le 0.60$.

$c_{anchor} := \frac{n \cdot As_{anchor} \cdot f_y}{0.85 \cdot f_c \cdot \beta_1 \cdot b_{anchor}} = 5.414 \cdot in$ Simplified equation 5.7.3.1.2-4

$\frac{c_{anchor}}{d_{anchor}} = 0.178$

This is less than 0.60 therefore f_y can be substituted for f_s

$a_{anchor} := \beta_1 \cdot c_{anchor} = 4.331 \cdot in$

$Mn_{anchor} := n \cdot As_{anchor} \cdot f_y \cdot \left(d_{anchor} - \frac{a_{anchor}}{2} \right)$

$Mr_{anchor} := \phi_{moment} \cdot Mn_{anchor} = 234.708 \cdot kip \cdot ft$

$Mu_{anchor} = 100.904 \cdot kip \cdot ft$

$$Check_{AnchorFlexure} := \begin{cases} \text{"OK"} & \text{if } \frac{Mr_{anchor}}{Mu_{anchor}} \geq 1 \\ \text{"NG"} & \text{otherwise} \end{cases} = \text{"OK"}$$

Check Minimum Flexural Reinforcement (5.7.3.3.2)

$f_r = 0.537 \cdot ksi$

AASHTO 5.4.2.6

$I_{g.anchor} := \frac{1}{12} \cdot t_{stem} \cdot h_{stem}^3 = 3.704 \times 10^4 \cdot in^4$

$y_{t.anchor} := \frac{h_{stem}}{2} = 1.75\,ft$

Distance from centroid to extreme tension fibers.
Conservatively ignore reinforcement.

$S_{c.anchor} := \frac{I_{g.anchor}}{y_{t.anchor}} = 1.764 \times 10^3 \cdot in^3$

$\gamma_3 := 0.67$

0.67 = Factor for Grade 60 ASTM A615 rebar

$\gamma_1 := 1.2$

1.2 = Factor for precast segmental structures

$M_{cr.anchor} := \gamma_3 \cdot \gamma_1 \cdot S_{c.anchor} \cdot f_r = 63.426 \cdot kip \cdot ft$

Simplified AASHTO Eq 5.7.3.3.2-1

$1.33 Mu_{anchor} \cdot b_w = 134.203\,ft \cdot kip \cdot ft$

$$Check_{MinSteelAnchor} := \begin{cases} \text{"OK"} & \text{if } Mr_{anchor} \geq \min(1.33 Mu_{anchor}, M_{cr.anchor}) \\ \text{"NG"} & \text{otherwise} \end{cases} = \text{"OK"}$$

Check Minimum Steel for Temperature and Shrinkage (11.6.1.5.1 & 5.10.8)

$$As_{min.anchor} := \max\left[0.11\frac{in^2}{ft}, \min\left[0.60\frac{in^2}{ft}, \frac{1.30 \cdot b_{anchor} \cdot h_{stem}}{2 \cdot \left(b_{anchor} + h_{stem}\right) \cdot \frac{f_y}{ksi}}\right]\right] = 0.6 \cdot \frac{in^2}{ft}$$

$$As_{min.anchor} \cdot h_{stem} = 2.1 \cdot in^2$$

$$As_{anchor} \cdot (n + 2) = 2.454 \cdot in^2$$

Account for extra two bars in compression face

Check Hook Development of Connection Steel in Wall

Per 5.10.2, A standard hook with a 180 degree bend shall have a 4*db extension, but not less than 2.5 inches. Per 5.12.3, Cover beyond free end of bar shall be 2 inches.

$$l_{hb} := \frac{38.0 diam_{anchor}}{\sqrt{\left(\frac{f_c}{ksi}\right)}} = 10.621 \cdot in$$

Basic development length for a Grade 60 bar with a standard hook (AASHTO 5.11.2.4.1)

Modification Factors to be applied to the Basic Development Length (AASHTO 5.11.2.4.2)

$M_{strength} := 1$ — Increase by fy/60 for yield strength greater than 60ksi

$M_{cover} := 0.7$ — 0.7 if side cover normal to plane of hook is at least 2.5 inches AND Cover beyond hook is at least 2.0in

$M_{stirrups} := 1.0$ — 0.8 if hook is enclose in with ties or stirrups as specified in 5.11.2.4.2

$M_{As} := 1.0$ — Conservatively assume entire area of steel provided is required.

$M_{lightweight} := 1.0$ — 1.3 if lightweight concrete is used.

$M_{epoxy} := 1.0$ — 1.2 if epoxy rebar is used.

$$M := M_{strength} \cdot M_{cover} \cdot M_{stirrups} \cdot M_{As} \cdot M_{lightweight} \cdot M_{epoxy} = 0.7$$

$l_{dh} := \max(6in, 8 \cdot diam_{anchor}, M \cdot l_{hb}) = 7.435 \cdot in$

$t_{wall.min} := cover_{wall} + l_{dh} = 8.935 \cdot in$

$$Check_{Wall.Thickness} := \begin{cases} \text{"OK"} & \text{if } t_{wall} \geq t_{wall.min} \\ \text{"NG"} & \text{otherwise} \end{cases} = \text{"OK"}$$