S:\PROJECTS\RENAUD BROTHERS\WINHALL, VT - VTRANS #STP CULV (31)\BRIDGE 52 PROJ 5778\DWGS\BCWTS 12X7 RENAUD 5778 BR52.DWG 4/15/2015 12:56 PM

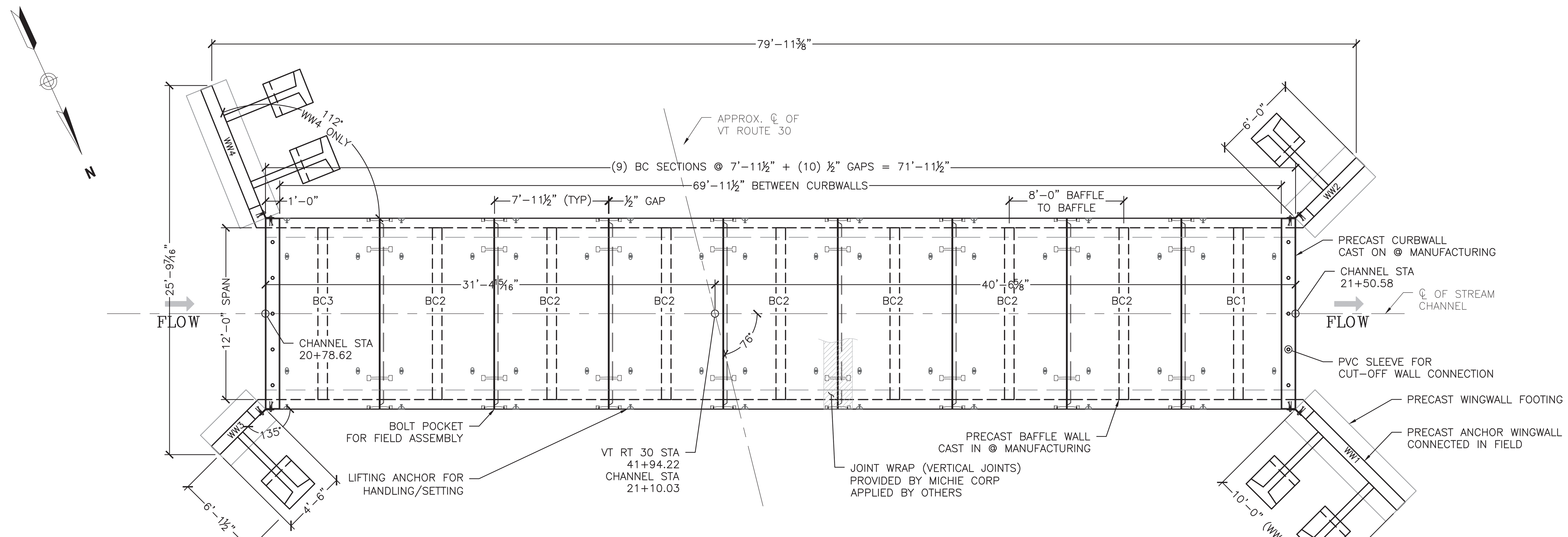

1 S1.0 LAYOUT PLAN VIEW
³⁄₁₆" = 1'-0"

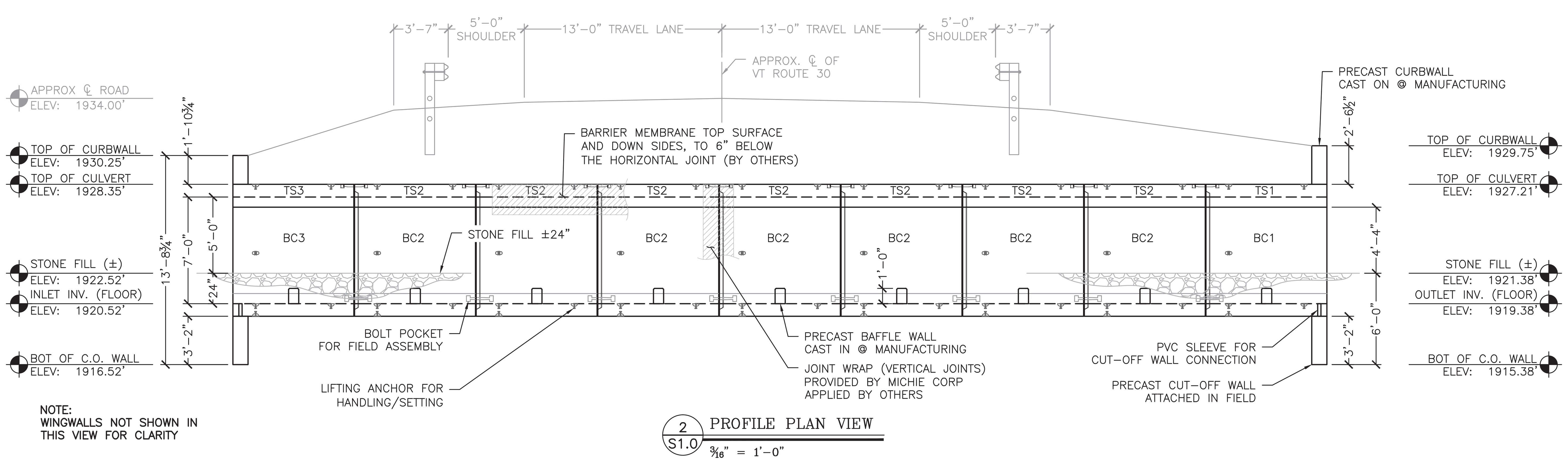

NOTE:
WINGWALLS NOT SHOWN IN THIS VIEW FOR CLARITY

2 S1.0 PROFILE PLAN VIEW
³⁄₁₆" = 1'-0"

BILL OF MATERIALS			
		IN	ORDERED
QTY	DESCRIPTION	STOCK	FROM
	ITEMS CAST-IN		
108	RL-24 4TON X 3.5" PLATE ANCHORS		
16	1-8NC 6X6 DOUBLE WW ANCHORS		
22	5-TON UTILITY ANCHORS		
10	2.5" DIA X 12" PVC SLEEVES		
16LF	4" DIA PVC SLEEVES (WEEP)		
	ITEMS FOR PRESHIPPING/PREP.		
330LF	1" CLOSED CELL NEOPRENE (25LF/ROLL)		
2 GAL	RED ADHESIVE (PRESS-SEAL 1-326)		
	ITEMS TO SHIP TO THE JOB		
20	4"X4"X.25" PLASTIC SHIMS		
240LF	ROYSTON 24" JOINT WRAP (50LF/ROLL)		
4 GAL	ROYSTON 740 ADHESIVE PRIMER (1 GAL/ROLL)		
48	7/8" X 18" GALV. THREADED ROD W/ 2 NUTS, 4 WASHERS		
6	135 DEG (1/2"T X 10" X 14") GALV. WW PLATES W/ HARDWARE		
2	112 DEG (1/2"T X 10" X 14") GALV. WW PLATES W/ HARDWARE		
10	#6 X 14" DOWEL BARS		

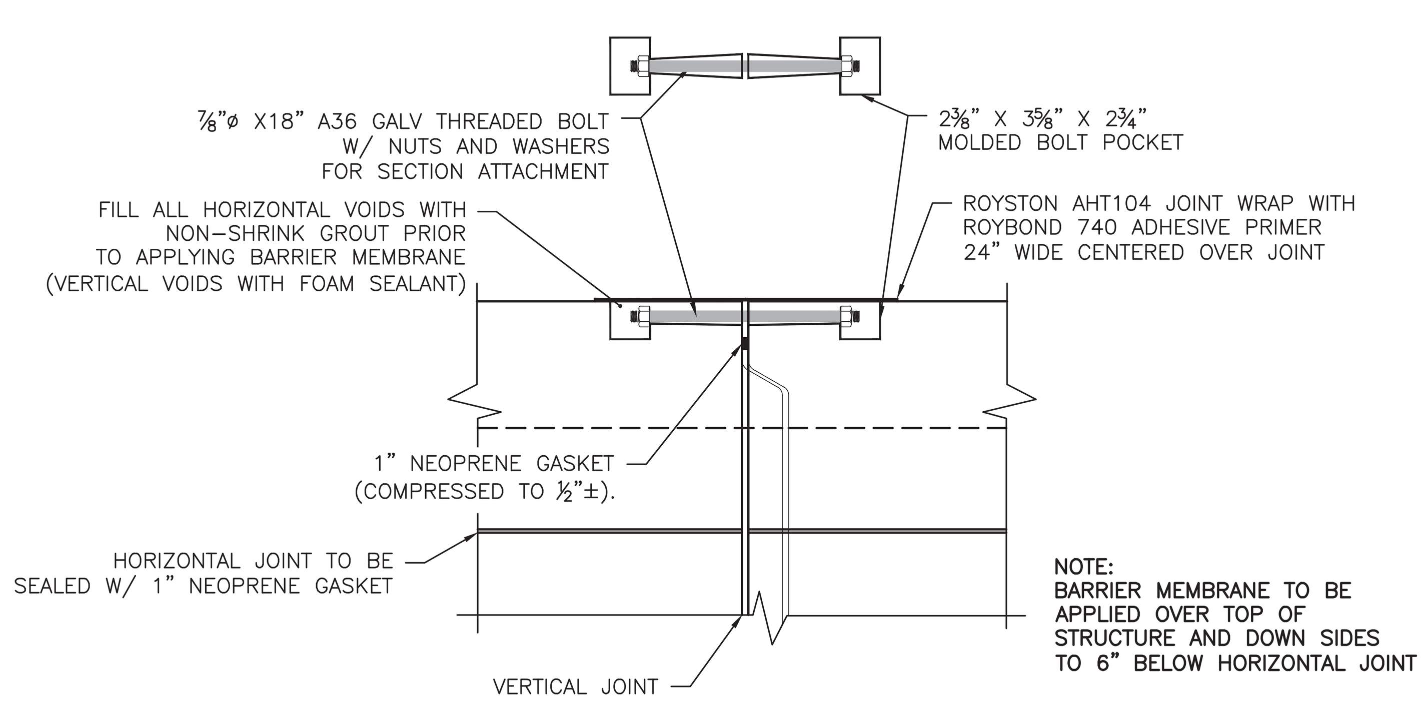

NOTE:
BARRIER MEMBRANE TO BE APPLIED OVER TOP OF STRUCTURE AND DOWN SIDES TO 6" BELOW HORIZONTAL JOINT

3 S1.0 BOX CULVERT JOINT CONNECTION DETAIL
1" = 1'-0"

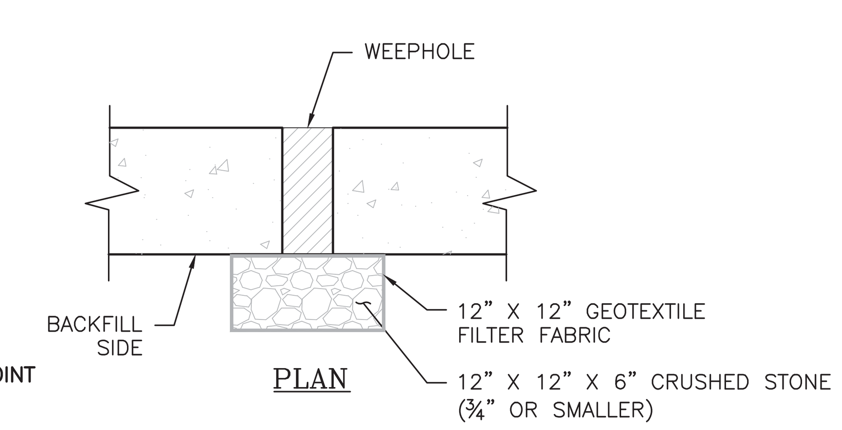

4 S1.0 WEEPHOLE BACKFILL DETAIL
1" = 1'-0"

GENERAL NOTES:

1. THE PLANS ARE INTENDED TO BE DRAWN TO SCALE. HOWEVER, IF A CRITICAL DIMENSION IS NOT PROVIDED, MICHIE CORPORATION SHOULD BE CONTACTED FOR VERIFICATION.

2. IF ANY OF THE WORK TO BE DONE AS SHOWN ON THE DRAWINGS DOES NOT CORRESPOND WITH THE EXISTING FIELD CONDITIONS, CONTACT THE ENGINEER PRIOR TO PROCEEDING WITH THE WORK IN QUESTION.

3. FIELD-VERIFY ALL ELEVATIONS PRIOR TO THE START OF CONSTRUCTION. IF THERE ARE ANY DISCREPANCIES, CONSULT THE ENGINEER PRIOR TO PROCEEDING WITH THE WORK IN QUESTION.

4. MAINTAIN MINIMUM 60 DEGREE SLING ANGLE WHEN HANDLING PRECAST COMPONENTS.

5. PRECAST COMPONENTS SHALL REACH A MINIMUM COMPRESSIVE STRENGTH OF 3,000 PSI PRIOR TO STRIPPING, AND THE MINIMUM DESIGN COMPRESSIVE STRENGTH PRIOR TO SHIPPING, UNLESS OTHERWISE DIRECTED BY THE ENGINEER.

6. ALL JOINTS AND VOIDS SHALL BE FILLED WITH NON-SHRINK GROUT. VERTICAL SURFACE VOIDS MAY BE FILLED WITH FOAM SEALANT.

7. SHOP DRAWINGS WERE DEVELOPED USING THE FOLLOWING RESOURCES FOR THE CONTRACT:
- "PROPOSED IMPROVEMENT BRIDGE PROJECT, TOWN OF WINHALL, VT ROUTE 30, BRIDGE NUMBERS 47 AND 52", PAGES 1-60 OF 60, PREPARED BY STANTEC CONSULTING SERVICES, INC. OF SOUTH BURLINGTON, VT. DATED 9/25/2014 WITH NO REVISION DATE.

8. IF THERE IS ADDITIONAL INFORMATION PERTINENT TO THE FABRICATION AND INSTALLATION OF THESE UNITS THAT IS NOT CONTAINED WITHIN THE RESOURCES LISTED ABOVE IT SHALL BE BROUGHT TO THE ATTENTION OF MICHIE CORPORATION. FAILURE TO MAKE SUCH ADDITIONAL INFORMATION AVAILABLE SHALL RELIEVE MICHIE CORPORATION OF ALL LIABILITIES ARISING FROM ERRORS OR OMISSIONS RELATED TO THE OMITTED INFORMATION.

BOX CULVERT NOTES:

1. BOX CULVERT SECTIONS ARE DESIGNED IN ACCORDANCE WITH
- AASHTO "LRFD BRIDGE DESIGN SPECIFICATIONS", 6TH EDITION.
- VTRANS 2011 "STANDARD SPECIFICATIONS FOR CONSTRUCTION".

2. THE FOLLOWING CRITERIA WAS USED FOR DESIGN:
- LIVE LOAD: HL-93
- EARTH COVER: 5-7 FEET
- BACKFILL SOIL UNIT WEIGHT: 140 PCF
- BACKFILL SOIL FRICTION ANGLE: 34 DEGREES
- CONCRETE STRENGTH: 5,000 PSI
- STEEL YIELD STRENGTH: 60,000 PSI

3. CONCRETE SHALL BE SELF-CONSOLIDATING CONFORMING TO ASTM C260 WITH A MINIMUM 28-DAY COMPRESSIVE STRENGTH OF 5,000 PSI. AGGREGATE SHALL CONFORM TO ASTM C-33 WITH A MAXIMUM DIAMETER OF 3/4". CEMENT SHALL CONFORM TO ASTM C150.

4. REINFORCING SHALL BE GRADE 60 DEFORMED BLACK BARS CONFORMING TO ASTM A-615. ALL BARS SHALL BE BENT COLD.

5. ALL EXPOSED EDGES EXCEPT WHERE NOTED SHALL BE CHAMFERED 3/4".

6. SUBGRADE PREPARATION SHALL CONFORM TO VTRANS 204.07 BEDDING FOR STRUCTURES. FOOTINGS SHALL BE PLACED AT ELEVATIONS SHOWN ON A MINIMUM OF 1'-0" OF CRUSHED STONE CONFORMING TO VTRANS 704.05(A). ALL TOPSOIL, LOOSE FILL, AND DELETERIOUS MATERIALS SHALL BE REMOVED BEFORE PLACING MATERIAL.

7. BACKFILL MATERIAL SHALL CONFORM TO VTRANS SECTION 704.08 GRANULAR BACKFILL FOR STRUCTURES. BACKFILL SHALL EXTEND FOR A MINIMUM DISTANCE OF 3'-0" BEYOND THE HORIZONTAL LIMITS OF THE STRUCTURE. PLACEMENT SHALL CONFORM TO VTRANS SECTION 204.08.

8. EXPOSED SURFACES SHOULD BE COATED WITH VTRANS APPROVED WATER REPELLENT (SUPPLIED BY OTHERS).

9. EACH SECTION SHALL BE PROVIDED WITH BOLT POCKETS FOR ATTACHMENT TO ADJACENT SECTIONS. 7/8" DIA. GALV. THREADED ROD, WASHERS AND NUTS SHALL BE PROVIDED FOR ASSEMBLY IN THE FIELD. CLOSED-CELL NEOPRENE JOINT SEALANT SHALL BE USED IN ALL JOINTS UNLESS NOTED OTHERWISE.

10. 2FT WIDE ROYSTON JOINT WRAP WITH ADHESIVE PROVIDED BY MICHIE CORP, INSTALLED BY OTHERS, CENTER ON JOINT AFTER GROUTING. BARRIER MEMBRANE PROVIDED AND INSTALLED BY OTHERS OVER TOP OF STRUCTURE AND DOWN THE SIDES TO 6" BELOW THE HORIZONTAL JOINT.

CURBWALL NOTES:

1. CURBWALL CONCRETE SHALL BE SELF-CONSOLIDATING CONFORMING TO ASTM C260 WITH A MINIMUM 28-DAY COMPRESSIVE STRENGTH OF 5,000 PSI. AGGREGATE SHALL CONFORM TO ASTM C-33 WITH A MAXIMUM DIAMETER OF 3/4". CEMENT SHALL CONFORM TO ASTM C150.

2. REINFORCING SHALL BE GRADE 60 EPOXY COATED AND SHALL CONFORM TO ASTM A-775. ALL BARS SHALL BE BENT COLD.

3. ALL EXPOSED EDGES EXCEPT WHERE NOTED SHALL BE CHAMFERED 3/4".

4. EXPOSED SURFACES SHOULD BE COATED WITH VTRANS APPROVED WATER REPELLENT (SUPPLIED BY OTHERS).

WING WALL NOTES:

1. SECTIONS ARE DESIGNED IN ACCORDANCE WITH
- AASHTO "LRFD BRIDGE DESIGN SPECIFICATIONS", 6TH EDITION
- VTRANS 2011 "STANDARD SPECIFICATIONS FOR CONSTRUCTION".

2. THE FOLLOWING SOIL PROPERTIES WERE USED IN THE DESIGN:

	SOIL WEIGHT [PCF]	FRICTION ANGLE [DEG]
• RETAINED SOIL	140	34
• FOUNDATION SOIL	140	40

- LIVE LOAD SURCHARGE = 2FT EQUIVALENT HEIGHT OF SOIL
- BACKSLOPE ANGLE: 2:1
- FACTORED BEARING RESISTANCE = 6000PSF (SERVICE), 15400PSF (STRENGTH)

3. CONCRETE SHALL BE SELF-CONSOLIDATING CONFORMING TO ASTM C260 WITH A MINIMUM 28-DAY COMPRESSIVE STRENGTH OF 5,000 PSI. AGGREGATE SHALL CONFORM TO ASTM C-33 WITH A MAXIMUM DIAMETER OF 3/4". CEMENT SHALL CONFORM TO ASTM C150.

4. UNLESS NOTED OTHERWISE, REINFORCING SHALL BE GRADE 60 DEFORMED BLACK BARS CONFORMING TO ASTM A-615. WHERE REQUIRED, EPOXY COATED REINFORCING SHALL CONFORM TO ASTM A-775. ALL BARS SHALL BE BENT COLD.

5. ALL EXPOSED EDGES EXCEPT WHERE NOTED SHALL BE CHAMFERED 3/4".

6. BACKFILL MATERIAL SHALL CONFORM TO VTRANS SECTION 704.08 GRANULAR BACKFILL FOR STRUCTURES. PLACEMENT SHALL CONFORM TO VTRANS SECTION 204.08.

7. ALL EXPOSED EDGES OF CONCRETE SHALL BE COATED WITH A VTRANS APPROVED WATER REPELLANT (BY OTHERS).

8. SUBGRADE PREPARATION SHALL CONFORM TO VTRANS 204.07 BEDDING FOR STRUCTURES. FOOTINGS SHALL BE PLACED AT ELEVATIONS SHOWN ON A MINIMUM OF 1'-0" OF CRUSHED STONE CONFORMING TO VTRANS 704.05(A). ALL TOPSOIL, LOOSE FILL, AND DELETERIOUS MATERIALS SHALL BE REMOVED BEFORE PLACING BACKFILL.

PRECAST CONCRETE FOOTING NOTES:

1. FOOTING CONCRETE SHALL BE SELF-CONSOLIDATING CONFORMING TO ASTM C260 WITH A MINIMUM 28-DAY COMPRESSIVE STRENGTH OF 5,000 PSI. AGGREGATE SHALL CONFORM TO ASTM C-33 WITH A MAXIMUM DIAMETER OF 3/4". CEMENT SHALL CONFORM TO ASTM C150.

2. UNLESS NOTED OTHERWISE, REINFORCING SHALL BE GRADE 60 DEFORMED BLACK BARS CONFORMING TO ASTM A-615. ALL BARS SHALL BE BENT COLD.

3. ALL EXPOSED EDGES EXCEPT WHERE NOTED SHALL BE CHAMFERED 3/4".

4. SUBGRADE PREPARATION FOR THE WINGWALL FOOTINGS SHALL CONFORM TO VTRANS 204.07 BEDDING FOR STRUCTURES. FOOTINGS SHALL BE PLACED AT ELEVATIONS SHOWN ON A MINIMUM OF 1'-0" OF CRUSHED STONE CONFORMING TO VTRANS 704.05(A). ALL TOPSOIL, LOOSE FILL, AND DELETERIOUS MATERIALS SHALL BE REMOVED BEFORE PLACING BACKFILL. SUBGRADE PREPARATION FOR THE CUT-OFF WALLS PER DETAIL ON SHEET 41 OF THE CONTRACT PLANS.

LIST OF SHEETS:

S1.0 LAYOUT/PROFILE VIEW & DETAILS
S2.0 FOOTING LAYOUT/DETAILS AND END ELEVATIONS
S3.0 BOX CULVERT DETAILS
S4.0 WINGWALL DETAILS
S5.0 ANCHOR DETAILS

No.	Date	Revision	By
1	4/15/2015	Revised per Stantec review 4/10/15	PJL
2	4/15/2015	Revised WW4 angle at contractor's request	PJL

STATE OF VERMONT
DARYL D. BURNS
No. 9031
Structural I
LICENSED PROFESSIONAL ENGINEER
4/20/15

MICHIE CORPORATION
173 BUXTON INDUSTRIAL DRIVE - PO BOX 870
HENNIKER, NH 03242
PHONE: 603-428-3218
FAX: 603-428-7426
WWW.MICHIECORP.COM

Bridge #52 - VT Route 30 - VAOT STP Culv(31)
Winhall, VT

12'x7' Open Top Box Culvert - Layout and Profile Views

Project No. 5778 Scale: AS SHOWN

Date: 2/24/2015 | Designed by: PJL/CFP | Drawn by: CFP | Checked by: PJL

Prepared for:
Renaud Brothers, Inc.
283 Fort Bridgeman Rd #2
Vernon, VT 05354

DWG NO. S1.0

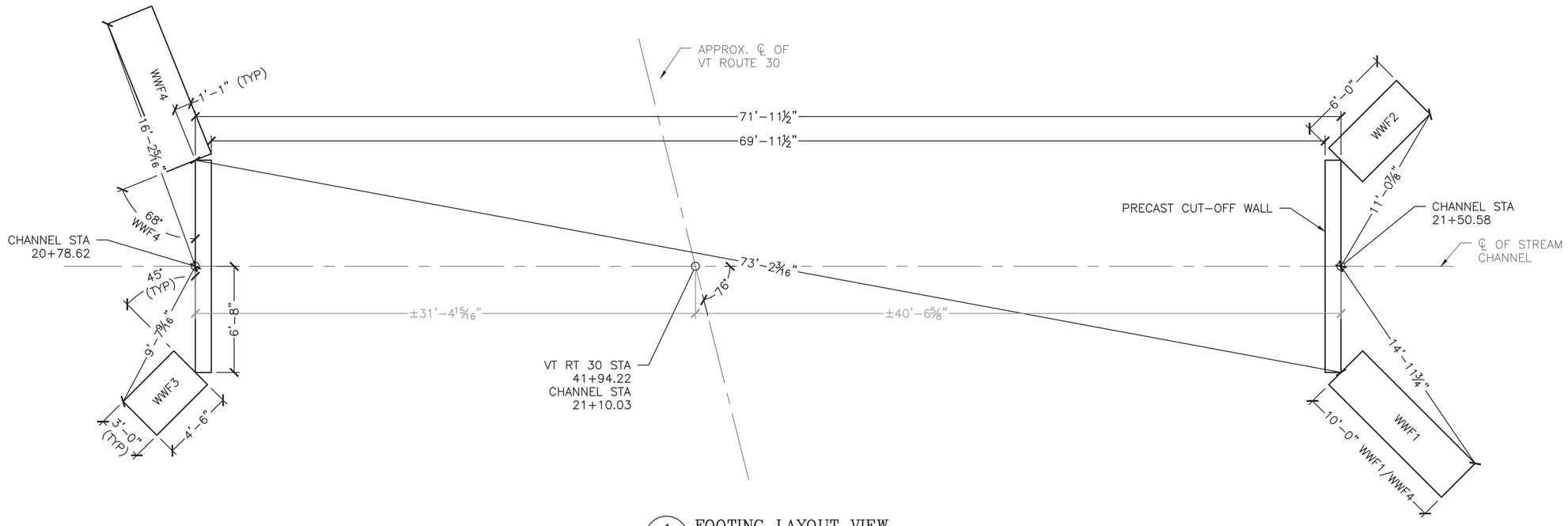

1 S2.0 FOOTING LAYOUT VIEW
3/16" = 1'-0"

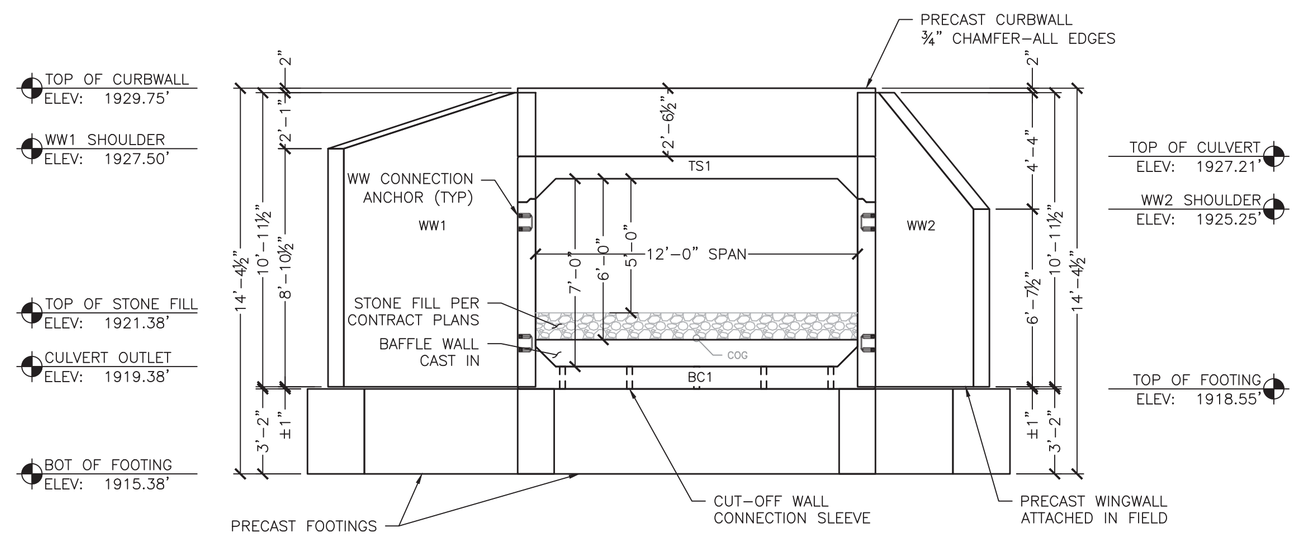

2 S2.0 OUTLET END ELEVATION
¼" = 1'-0"

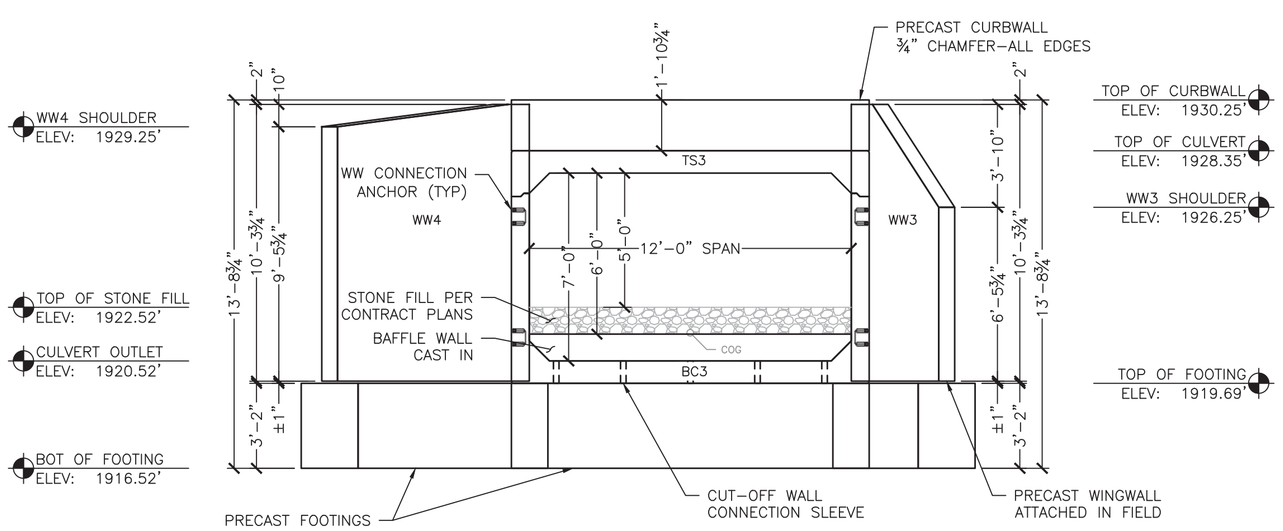

3 S2.0 INLET END ELEVATION
¼" = 1'-0"

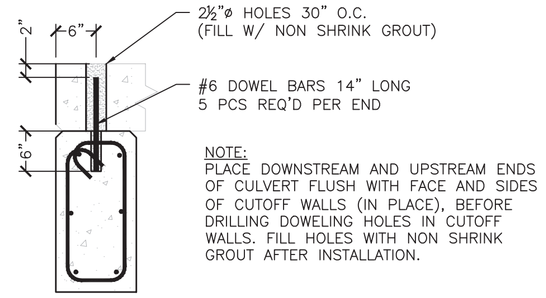

4 S1.0 CUTOFF WALL CONNECTION DETAIL
¾" = 1'-0"

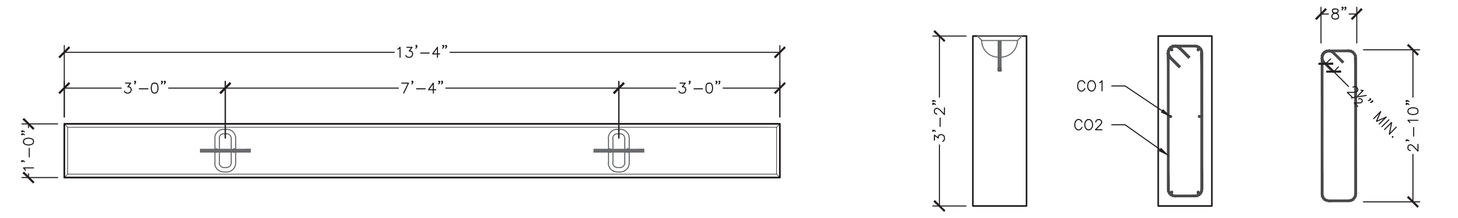

6 S2.0 C.O. WALL PLAN VIEW
½" = 1'-0"

CUT-OFF WALL - 2 REQ'D

ITEM 275800
UNIT WEIGHT AND VOLUME:
FOOTING: 1.56CY (6,550#)

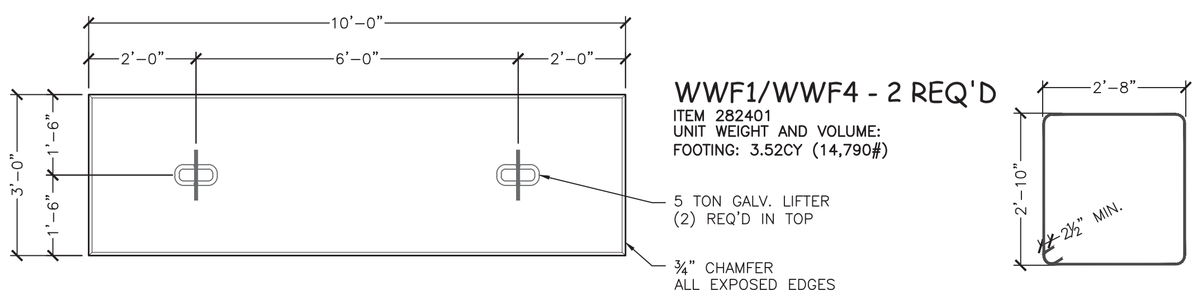

WWF1/WWF4 - 2 REQ'D

ITEM 282401
UNIT WEIGHT AND VOLUME:
FOOTING: 3.52CY (14,790#)

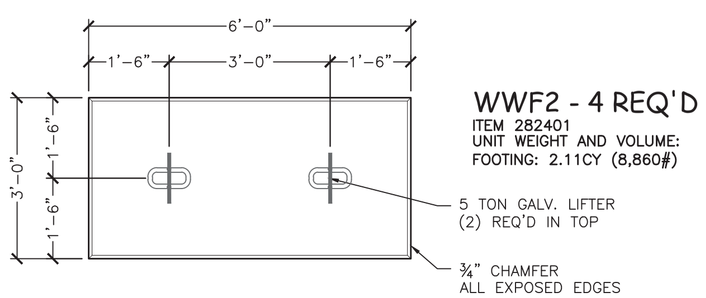

WWF2 - 4 REQ'D

ITEM 282401
UNIT WEIGHT AND VOLUME:
FOOTING: 2.11CY (8,860#)

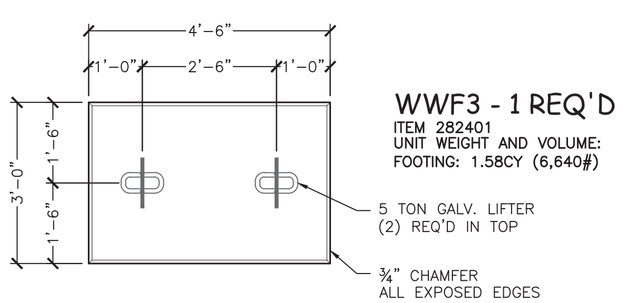

WWF3 - 1 REQ'D

ITEM 282401
UNIT WEIGHT AND VOLUME:
FOOTING: 1.58CY (6,640#)

5 S2.0 WWF PLAN VIEW
½" = 1'-0"

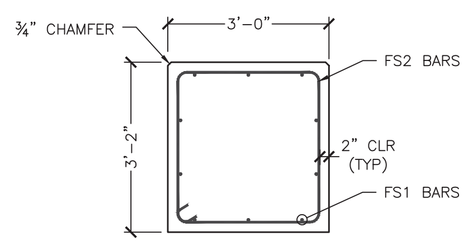

6 S2.0 WINGWALL FOOTING SECTION
½" = 1'-0"

No.	Date	Revision	By
4	4/15/2015	Revised WW4 angle at contractor's request	PJL

STATE OF VERMONT PAUL J. LEWIS No. 9031 Structural I LICENSED PROFESSIONAL ENGINEER 4/20/15

MICHIE CORPORATION
173 BUXTON INDUSTRIAL DRIVE - PO BOX 870
HENNIKER, NH 03242
PHONE: 603-428-3218
FAX: 603-428-7426
WWW.MICHIECORP.COM

Bridge #52 - VT Route 30 - VAOT STP Culv(31)
Winhall, VT
12'x7' Open Top Box Culvert - Footing Layout & Elevations

Project No. 5778
Date: 2/24/2015
Designed by: PJL/CFP
Drawn by: CFP
Checked by: PJL
Scale: AS SHOWN

Prepared for:
Renaud Brothers, Inc.
283 Fort Bridgeman Rd #2
Vernon, VT 05354

DWG NO.
S2.0

Delta 2015.059.013

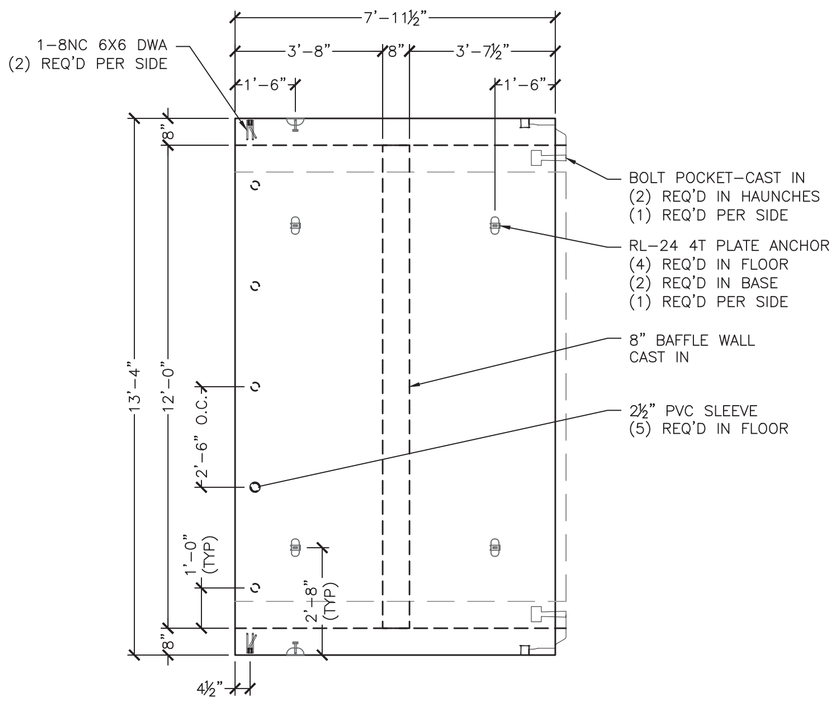

1 S3.0 BC3 PLAN VIEW
⅜" = 1'-0"

BC3 - 1 REQ'D

ITEM 281207
UNIT WEIGHT AND VOLUME:
CULVERT: 5.62CY (23,600#)
BAFFLE WALL: .28CY (1,180#)
TOTAL WEIGHT: 24,780#

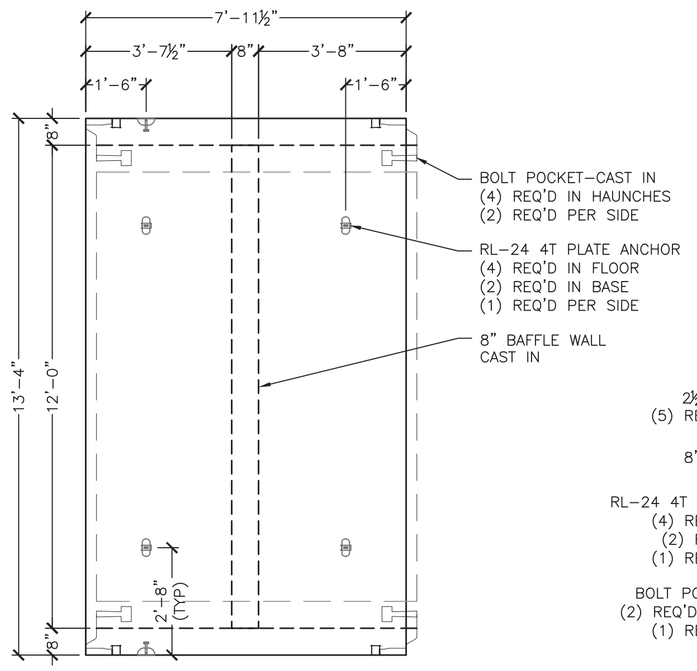

3 S3.0 BC2 PLAN VIEW
⅜" = 1'-0"

BC2 - 7 REQ'D

ITEM 281207
UNIT WEIGHT AND VOLUME:
CULVERT: 5.62CY (23,600#)
BAFFLE WALL: .28CY (1,180#)
TOTAL WEIGHT: 24,780#

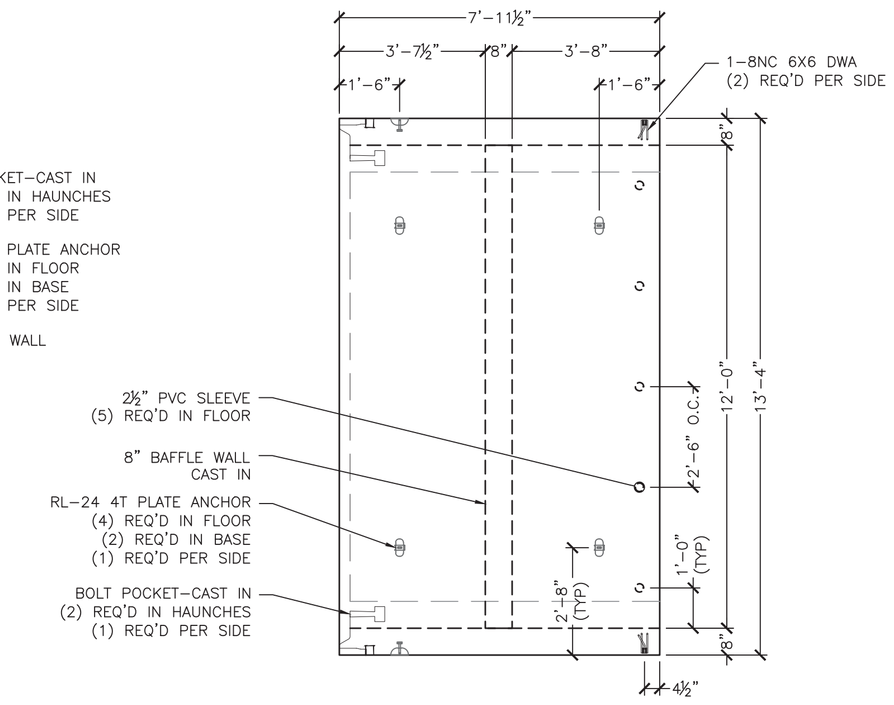

5 S3.0 BC1 PLAN VIEW
⅜" = 1'-0"

BC1 - 1 REQ'D

ITEM 281207
UNIT WEIGHT AND VOLUME:
CULVERT: 5.62CY (23,600#)
BAFFLE WALL: .28CY (1,180#)
TOTAL WEIGHT: 24,780#

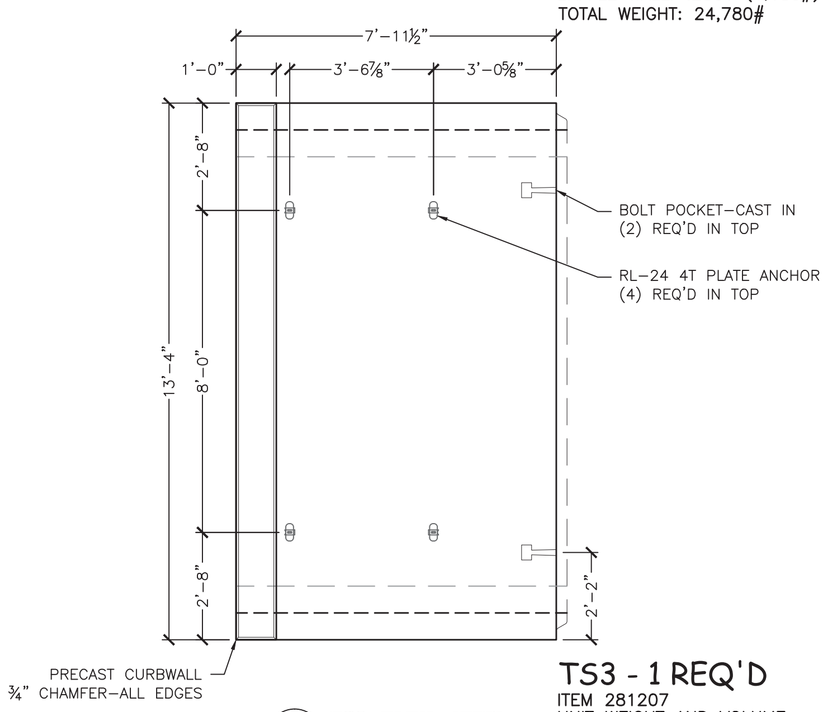

2 S3.0 TS3 ELEV. VIEW
⅜" = 1'-0"

TS3 - 1 REQ'D

ITEM 281207
UNIT WEIGHT AND VOLUME:
TOP SLAB: 3.76CY (15,790#)
CURBWALL: .94CY (3,950#)
TOTAL WEIGHT: 19,740#

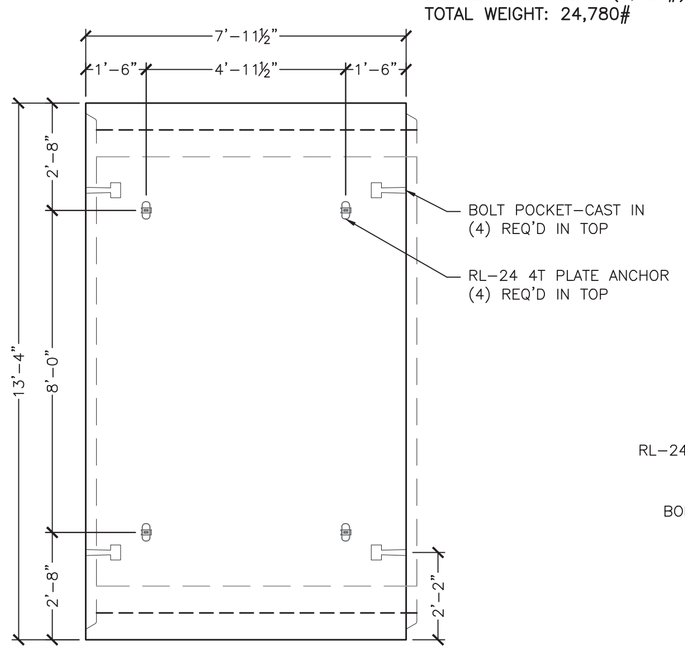

4 S3.0 TS2 ELEV. VIEW
⅜" = 1'-0"

TS2 - 7 REQ'D

ITEM 281207
UNIT WEIGHT AND VOLUME:
TOP SLAB: 3.76CY (15,790#)

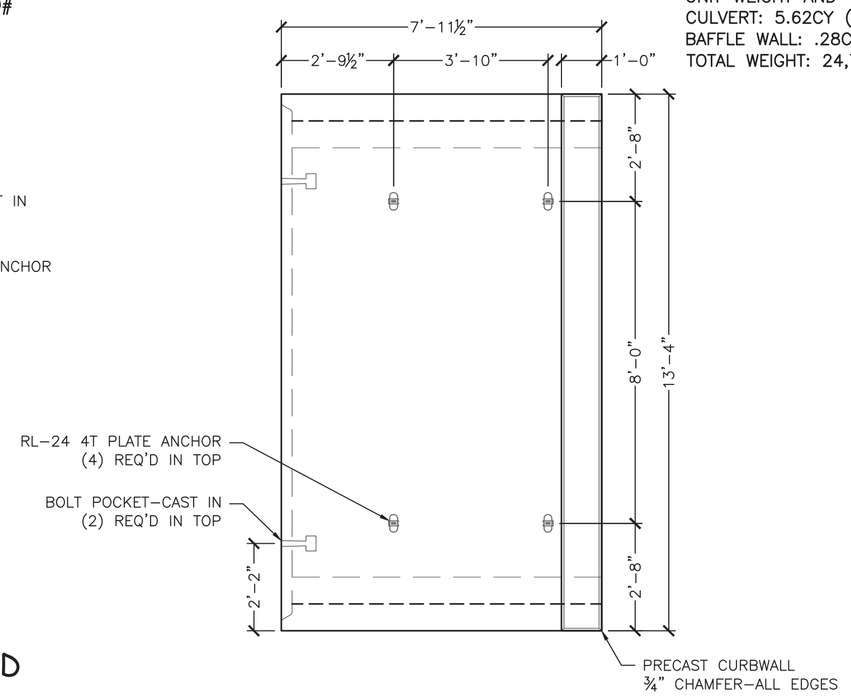

6 S3.0 TS1 ELEV. VIEW
⅜" = 1'-0"

TS1 - 1 REQ'D

ITEM 281207
UNIT WEIGHT AND VOLUME:
TOP SLAB: 3.76CY (15,790#)
CURBWALL: .94CY (3,950#)
TOTAL WEIGHT: 19,740#

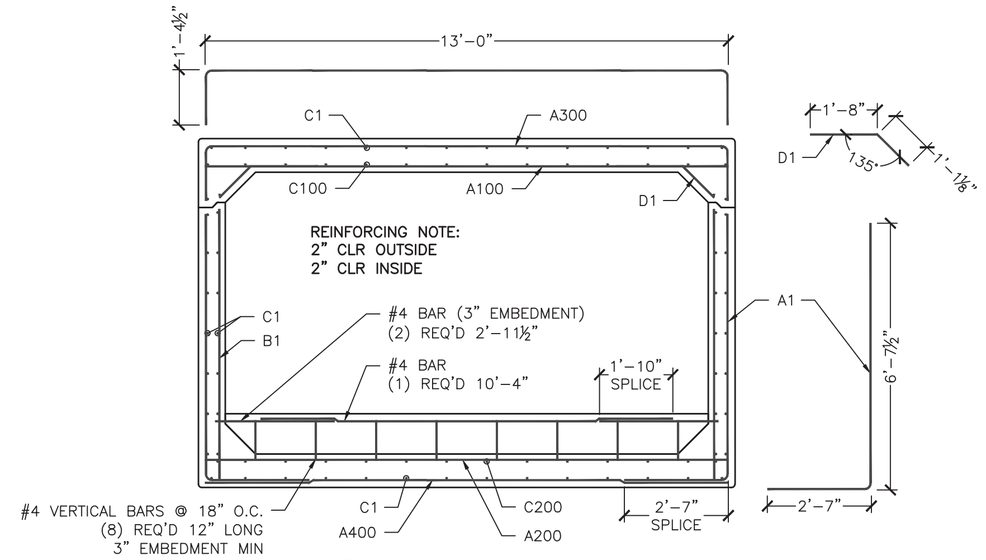

8 S3.0 REINFORCING SECTION
⅜" = 1'-0"

TS2/BC2 REINFORCING SCHEDULE (COUNTS REFLECT 1 UNIT)						
LOCATION	MARK	QTY	SIZE	SPACING	TYPE	CUT LENGTH
TOP SLAB (INT)	A100	14	#8	7"	STRAIGHT	13'-0"
BOT. SLAB (INT)	A200	8	#5	12"	STRAIGHT	13'-0"
TOP SLAB (EXT)	A300	8	#4	12"	"U" BAR	15'-6½"
BOT. SLAB (EXT)	A400	11	#6	9"	STRAIGHT	13'-0"
WALL (EXT)	A1	22	#6	9"	"L" BAR	9'-1¼"
WALL (INT)	B1	16	#4	12"	STRAIGHT	6'-9"
LONGIT. TOP (EXT)	C1	14	#4	12"	STRAIGHT	7'-7"
LONGIT. TOP (INT)	C100	14	#4	12"	STRAIGHT	7'-7"
LONGIT. BOT. (INT)	C200	14	#4	12"	STRAIGHT	7'-7"
LONGIT. BOT (EXT)	C1	14	#4	12"	STRAIGHT	7'-7"
LONGIT. WALL (EXT)	C1	14	#4	12"	STRAIGHT	7'-7"
LONGIT. WALL (INT)	C1	14	#4	12"	STRAIGHT	7'-7"
TOP SLAB (HAUNCH)	D1	28	#4	7"	BENT BARS	2'-9¼"

TS1/BC1 REINFORCING SCHEDULE (COUNTS REFLECT 1 UNIT)						
LOCATION	MARK	QTY	SIZE	SPACING	TYPE	CUT LENGTH
TOP SLAB (INT)	A100	14	#8	7"	STRAIGHT	13'-0"
BOT. SLAB (INT)	A200	8	#5	12"	STRAIGHT	13'-0"
TOP SLAB (EXT)	A300	8	#4	12"	"U" BAR	15'-6½"
BOT. SLAB (EXT)	A400	11	#6	9"	STRAIGHT	13'-0"
WALL (EXT)	A1	22	#6	9"	"L" BAR	8'-8¼"
WALL (INT)	B1	16	#4	12"	STRAIGHT	6'-9"
LONGIT. TOP (EXT)	C1	14	#4	12"	STRAIGHT	7'-7"
LONGIT. TOP (INT)	C100	14	#4	12"	STRAIGHT	7'-4"
LONGIT. BOT. (INT)	C200	14	#4	12"	STRAIGHT	7'-4"
LONGIT. BOT (EXT)	C1	14	#4	12"	STRAIGHT	7'-7"
LONGIT. WALL (EXT)	C1	14	#4	12"	STRAIGHT	7'-7"
LONGIT. WALL (INT)	C1	14	#4	12"	STRAIGHT	7'-4"
TOP SLAB (HAUNCH)	D1	28	#4	7"	BENT BARS	2'-9¼"
TOP SLAB	DBS1	28	#4	12"	"L" DOWELS	2'-0"
CURBWALL	DBI1	28	#4	12"	STRAIGHT	2'-4½"
CURBWALL	CWS1	6	#4	12"	STRAIGHT	13'-0"

TS3/BC3 REINFORCING SCHEDULE (COUNTS REFLECT 1 UNIT)						
LOCATION	MARK	QTY	SIZE	SPACING	TYPE	CUT LENGTH
TOP SLAB (INT)	A100	14	#8	7"	STRAIGHT	13'-0"
BOT. SLAB (INT)	A200	8	#5	12"	STRAIGHT	13'-0"
TOP SLAB (EXT)	A300	8	#4	12"	"U" BAR	15'-6½"
BOT. SLAB (EXT)	A400	11	#6	9"	STRAIGHT	13'-0"
WALL (EXT)	A1	22	#6	9"	"L" BAR	8'-8¼"
WALL (INT)	B1	16	#4	12"	STRAIGHT	6'-9"
LONGIT. TOP (EXT)	C1	14	#4	12"	STRAIGHT	7'-7"
LONGIT. TOP (INT)	C100	14	#4	12"	STRAIGHT	7'-10"
LONGIT. BOT. (INT)	C200	14	#4	12"	STRAIGHT	7'-10"
LONGIT. BOT (EXT)	C1	14	#4	12"	STRAIGHT	7'-7"
LONGIT. WALL (EXT)	C1	14	#4	12"	STRAIGHT	7'-7"
LONGIT. WALL (INT)	C1	14	#4	12"	STRAIGHT	7'-10"
TOP SLAB (HAUNCH)	D1	28	#4	7"	BENT BARS	2'-9¼"
TOP SLAB	DBS1	28	#4	12"	"L" DOWELS	2'-0"
CURBWALL	DBI1	28	#4	12"	STRAIGHT	1'-8¾"
CURBWALL	CWS1	6	#4	12"	STRAIGHT	13'-0"

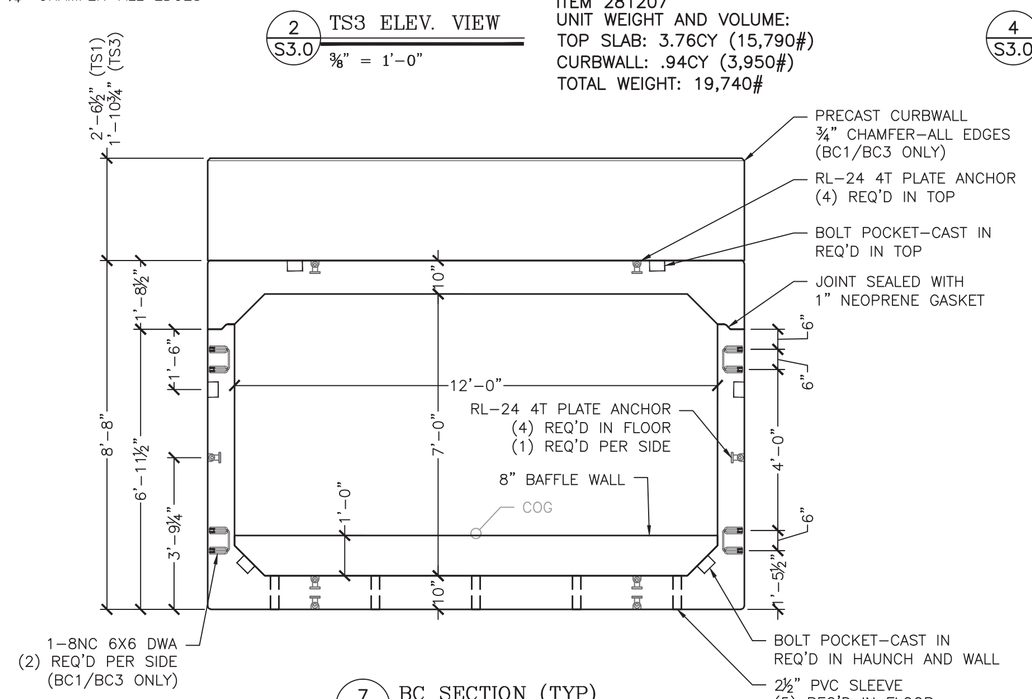

7 S3.0 BC SECTION (TYP)
⅜" = 1'-0"

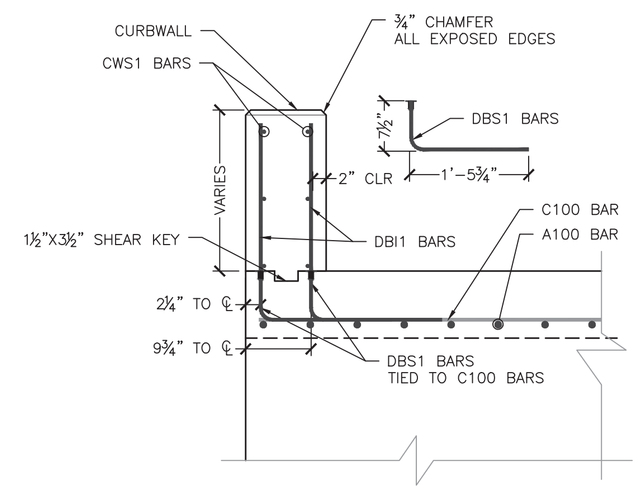

9 S3.0 CURBWALL REINFORCING SECTION
¾" = 1'-0"

No.	Date	Revision	By
1	4/15/2015	Revised per Statec review 4/10/15	PJL

STATE OF VERMONT
PAUL J. LEMIEUX
No. 9031
Structural
PROFESSIONAL ENGINEER
4/20/15

MICHIE CORPORATION
173 BUXTON INDUSTRIAL DRIVE - PO BOX 870
HENNIKER, NH 03242
PHONE: 603-428-3218
FAX: 603-428-7426
WWW.MICHIECORP.COM

Bridge #52 - VT Route 30 - VAOT STP Culv(31)
Winhall, VT

12'x7' Open Top Box Culvert - Footing Layout & Elevations

Project No. 5778
Date: 2/24/2015
Designed by: PJL/CFP
Drawn by: CFP
Checked by: PJL
Scale: AS SHOWN

Prepared for:
Renaud Brothers, Inc.
283 Fort Bridgeman Rd #2
Vernon, VT 05354

DWG NO.
S3.0

Delta 2015.059.013

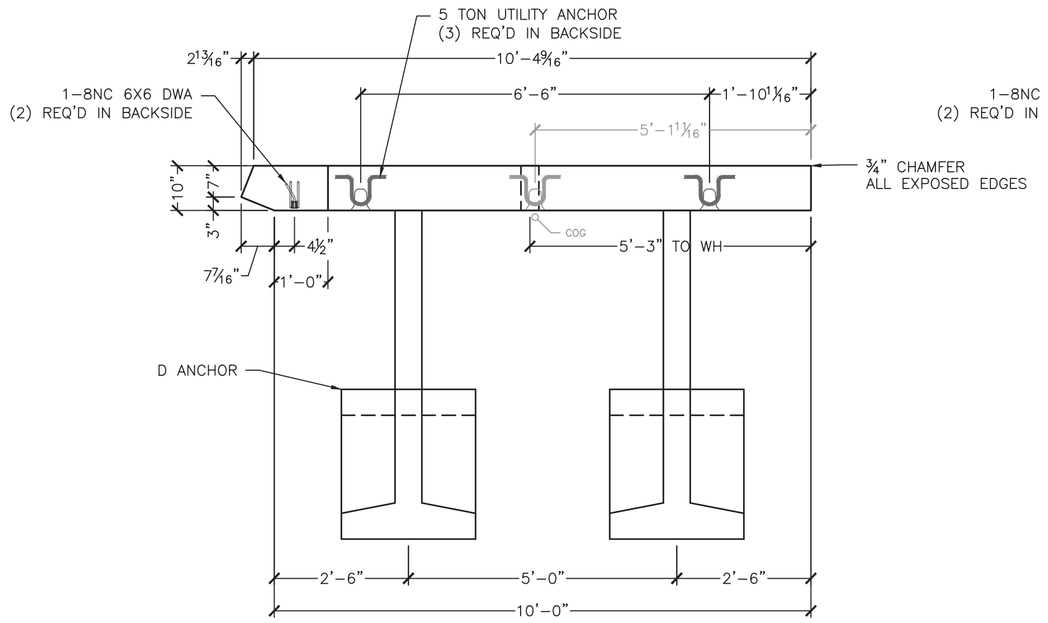

1 S4.0 WW4 PLAN VIEW
½" = 1'–0"

WW4 - 1 REQ'D
ITEM 275602
UNIT WEIGHT AND VOLUME:
WALL: 3.13CY (13,150#)
D ANCHOR: 0.54CY (2,270#)
TOTAL WEIGHT: 15,420#

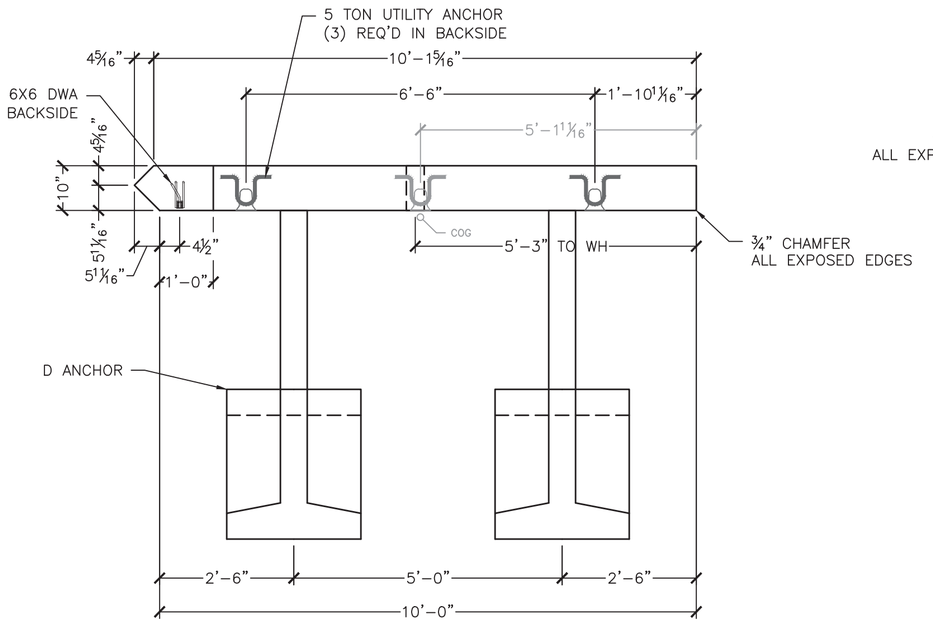

3 S4.0 WW1 PLAN VIEW
½" = 1'–0"

WW1 - 1 REQ'D
ITEM 275602
UNIT WEIGHT AND VOLUME:
WALL: 3.17CY (13,320#)
D ANCHOR: 0.54CY (2,270#)
TOTAL WEIGHT: 15,590#

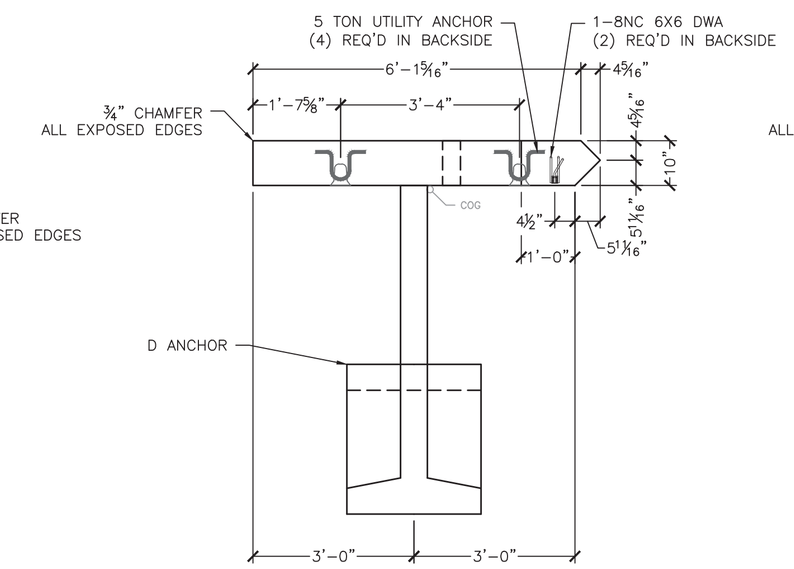

5 S4.0 WW2 PLAN VIEW
½" = 1'–0"

WW2 - 1 REQ'D
ITEM 275602
UNIT WEIGHT AND VOLUME:
WALL: 1.76CY (7,390#)
D ANCHOR: 0.54CY (2,270#)
TOTAL WEIGHT: 9,660#

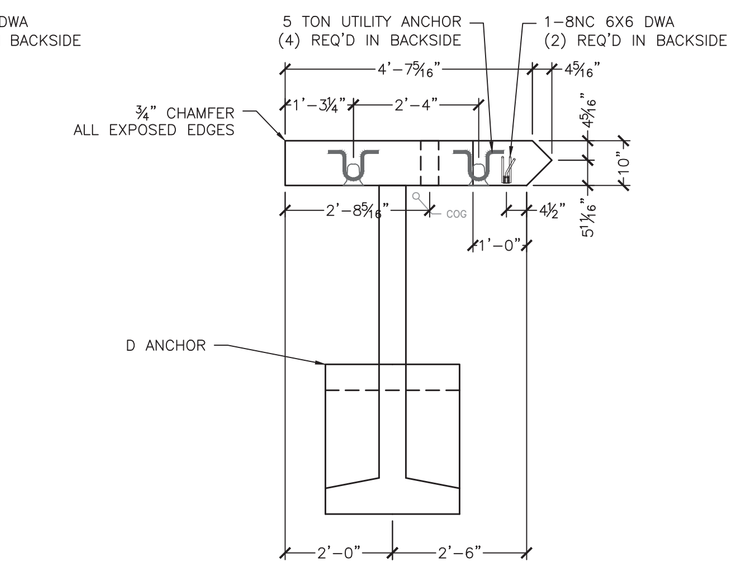

7 S4.0 WW3 PLAN VIEW
½" = 1'–0"

WW3 - 1 REQ'D
ITEM 275602
UNIT WEIGHT AND VOLUME:
WALL: 1.31CY (5,500#)
D ANCHOR: 0.54CY (2,270#)
TOTAL WEIGHT: 7,770#

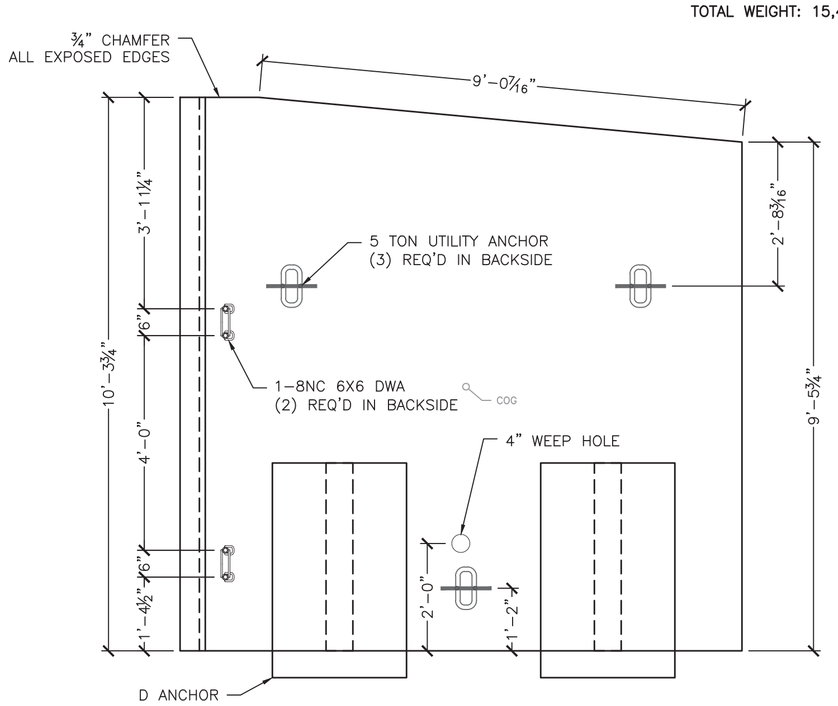

2 S4.0 WW4 ELEV. VIEW
½" = 1'–0" (Looking @ Backside)

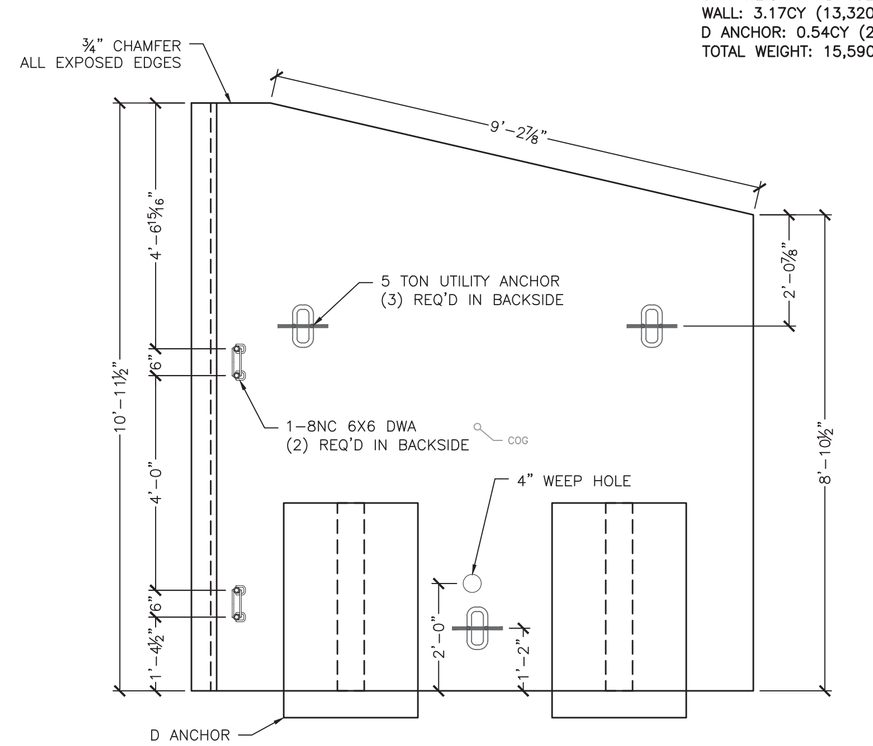

4 S4.0 WW1 ELEV. VIEW
½" = 1'–0" (Looking @ Backside)

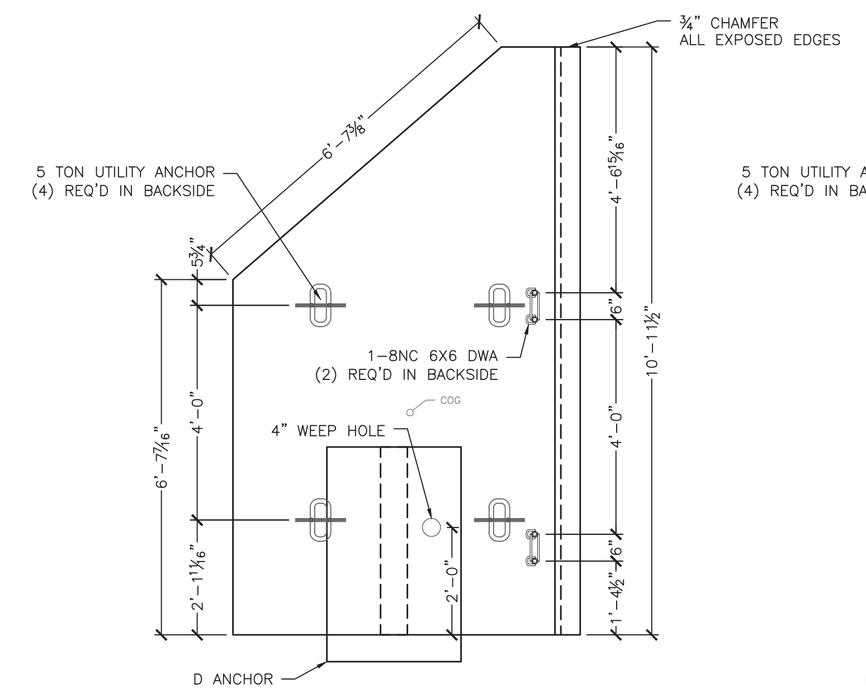

6 S4.0 WW2 ELEV. VIEW
½" = 1'–0" (Looking @ Backside)

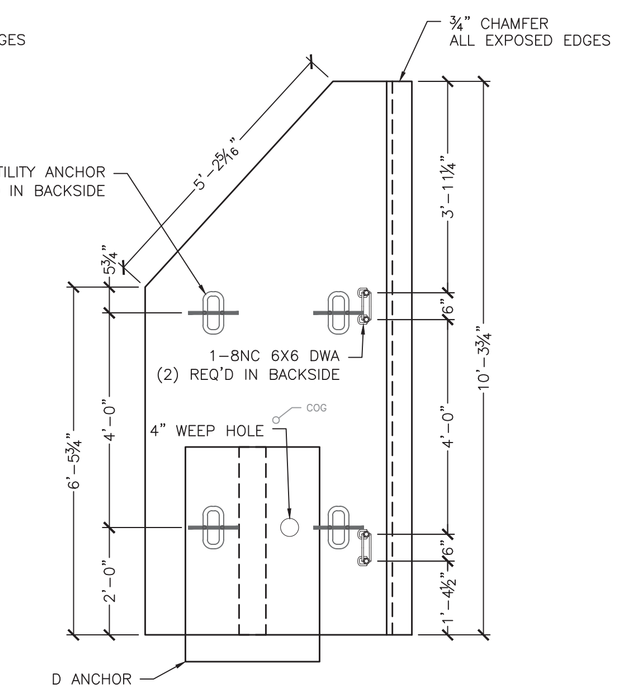

8 S4.0 WW3 ELEV. VIEW
½" = 1'–0" (Looking @ Backside)

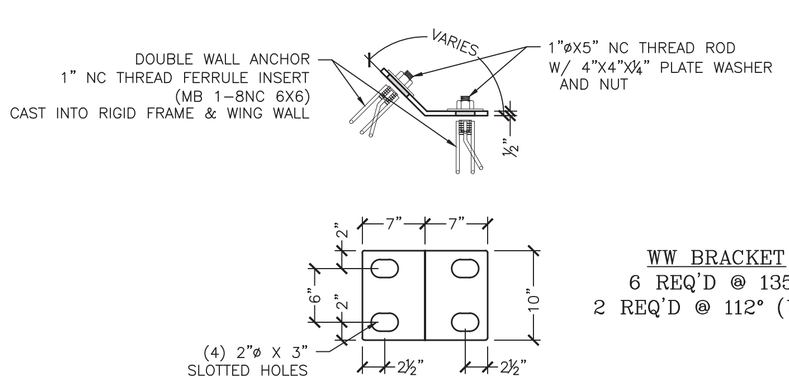

WW BRACKET
6 REQ'D @ 135°
2 REQ'D @ 112° (WW4)

PLATES TO BE MADE OF ½" MILD STEEL, PLASMA CUT, AND BENT AS REQUIRED. (HOT DIPPED GALVANIZED AFTER BENDING)

9 S4.0 WINGWALL BRACKET DETAIL
1" = 1'–0"

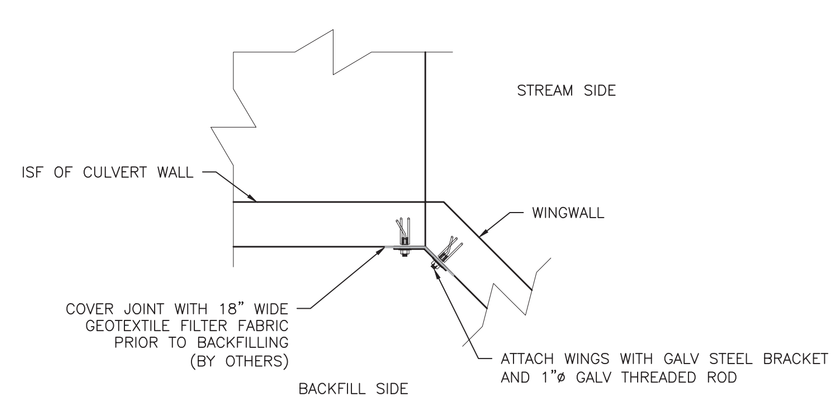

10 S4.0 BRIDGE TO WW JOINT DETAIL
½" = 1'–0"

No.	Date	Revision	By
4	4/15/2015	Revised WW4 angle at contractor's request	PJL

STATE OF VERMONT
Peter J. Lawson
No. 9031
Structural I
Vermont, USA
PROFESSIONAL ENGINEER
4/20/15

MICHE CORPORATION
173 BUXTON INDUSTRIAL DRIVE - PO BOX 870
HENNIKER, NH 03242
PHONE: 603-428-3218
FAX: 603-428-7426
WWW.MICHECORP.COM

Bridge #52 - VT Route 30 - VAOT STP Culv(31)
Winhall, VT
12'x7' Open Top Box Culvert - Wingwall Details

Scale: AS SHOWN
Project No. 5778
Date: 2/24/2015
Designed by: PJL/CFP
Drawn by: CFP
Checked by: PJL

Prepared for:
Renaud Brothers, Inc.
283 Fort Bridgeman Rd #2
Vernon, VT 05354

DWG NO.
S4.0

Delta 2015.059.013

NOTE: BAR COUNTS REPRESENT 1 UNIT.

WW4 REINFORCING SCHEDULE					
BAR MARK	LOCATION	TYPE	SIZE/SPACING	CUT LENGTH	# OF PCS
VERTICAL	OSF	STRAIGHT	#4 @ 12"	9'-11¾" TO 9'-1¾"	10
VERTICAL	ISF	STRAIGHT	#5 @ 9"	9'-11¾" TO 9'-1¾"	10
HORIZONTAL	OSF	STRAIGHT	#4 @ 12"	9'-11½"	10
HORIZONTAL	ISF	STRAIGHT	#4 @ 12"	9'-10¼"	10
DIAGONAL	FOLLOW SLOPE	STRAIGHT	#4	9'-0"	2

WW2 REINFORCING SCHEDULE					
BAR MARK	LOCATION	TYPE	SIZE/SPACING	CUT LENGTH	# OF PCS
VERTICAL	OSF	STRAIGHT	#4 @ 12"	10'-7½" TO 6'-3½"	6
VERTICAL	ISF	STRAIGHT	#5 @ 9"	10'-7½" TO 6'-3½"	6
HORIZONTAL	OSF	STRAIGHT	#4 @ 12"	5'-11½"	11
HORIZONTAL	ISF	STRAIGHT	#4 @ 12"	5'-10¼"	11
DIAGONAL	FOLLOW SLOPE	STRAIGHT	#4	6'-5"	2

WW3 REINFORCING SCHEDULE					
BAR MARK	LOCATION	TYPE	SIZE/SPACING	CUT LENGTH	# OF PCS
VERTICAL	OSF	STRAIGHT	#4 @ 12"	9'-11¾" TO 6'-1¾"	5
VERTICAL	ISF	STRAIGHT	#5 @ 9"	9'-11¾" TO 6'-1¾"	5
HORIZONTAL	OSF	STRAIGHT	#4 @ 12"	4'-5½"	10
HORIZONTAL	ISF	STRAIGHT	#4 @ 12"	4'-4¼"	10
DIAGONAL	FOLLOW SLOPE	STRAIGHT	#4	5'-0"	2

WW1 REINFORCING SCHEDULE					
BAR MARK	LOCATION	TYPE	SIZE/SPACING	CUT LENGTH	# OF PCS
VERTICAL	OSF	STRAIGHT	#4 @ 12"	9'-11¾" TO 8'-6½"	10
VERTICAL	ISF	STRAIGHT	#5 @ 9"	9'-11¾" TO 8'-6½"	10
HORIZONTAL	OSF	STRAIGHT	#4 @ 12"	9'-11½"	10
HORIZONTAL	ISF	STRAIGHT	#4 @ 12"	9'-10¼"	10
DIAGONAL	FOLLOW SLOPE	STRAIGHT	#4	9'-0"	2

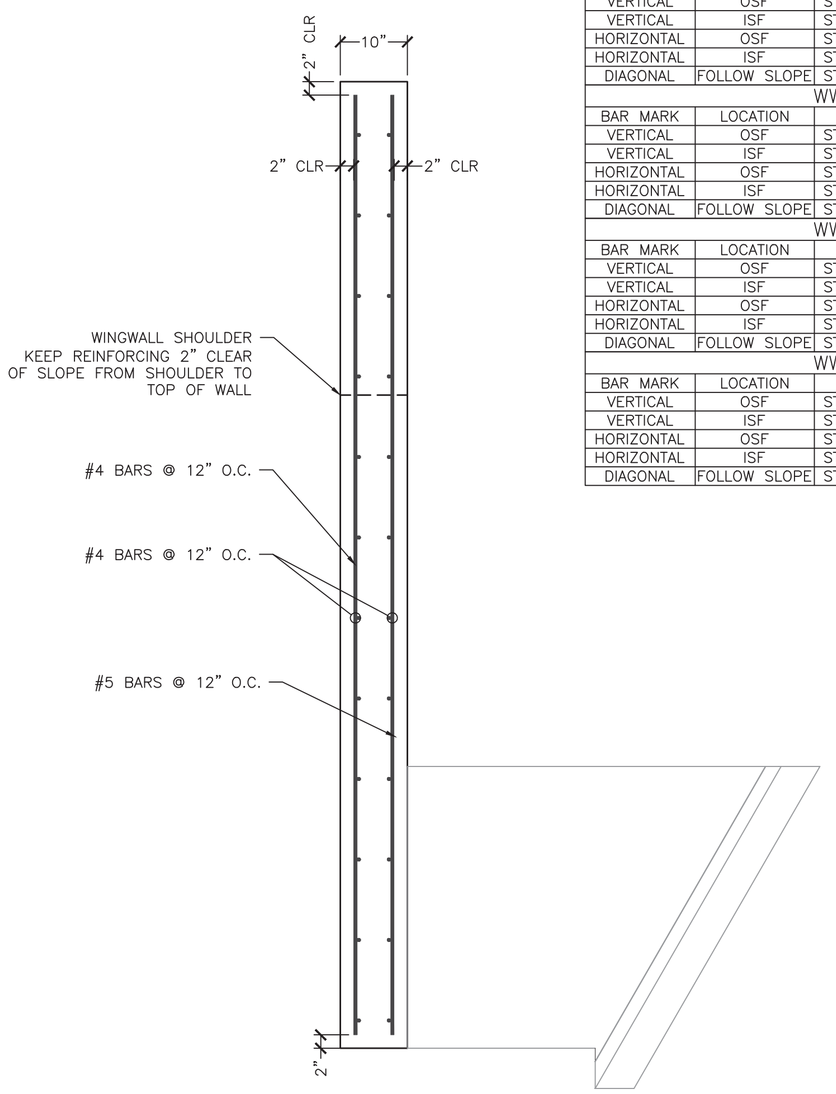

1 S5.0 WINGWALL REINFORCING (TYP)
¾" = 1'-0"

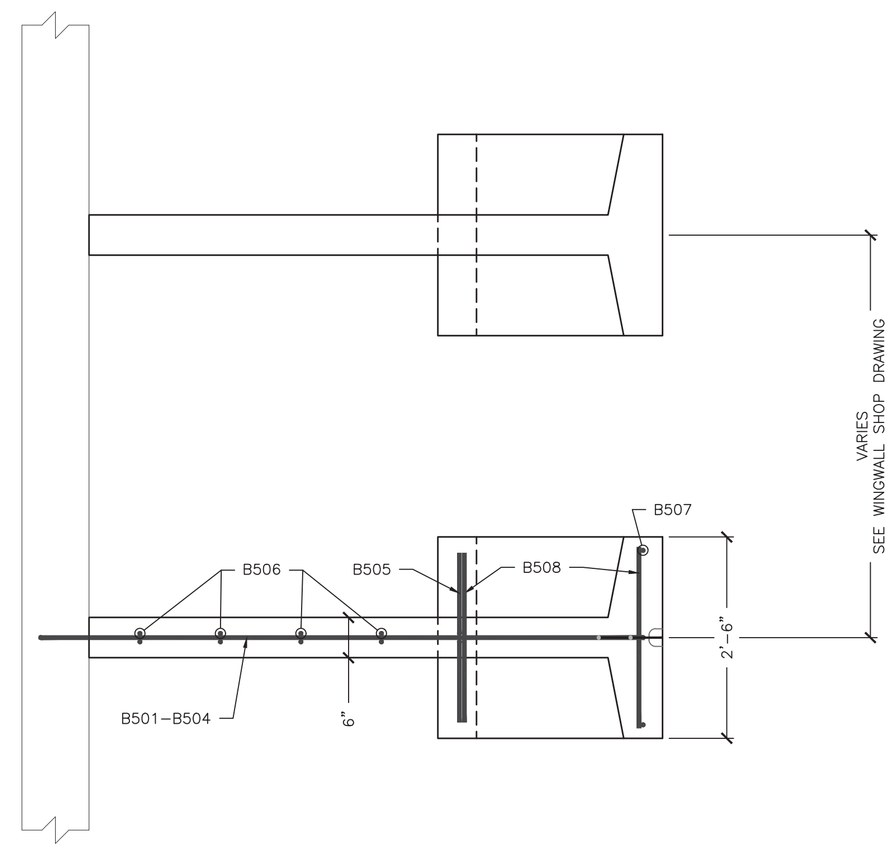

6 REQ'D

NOTE: REINFORCING SHOWN REPRESENTS "E" ANCHOR
OTHER ANCHOR REINFORCING SIMILAR

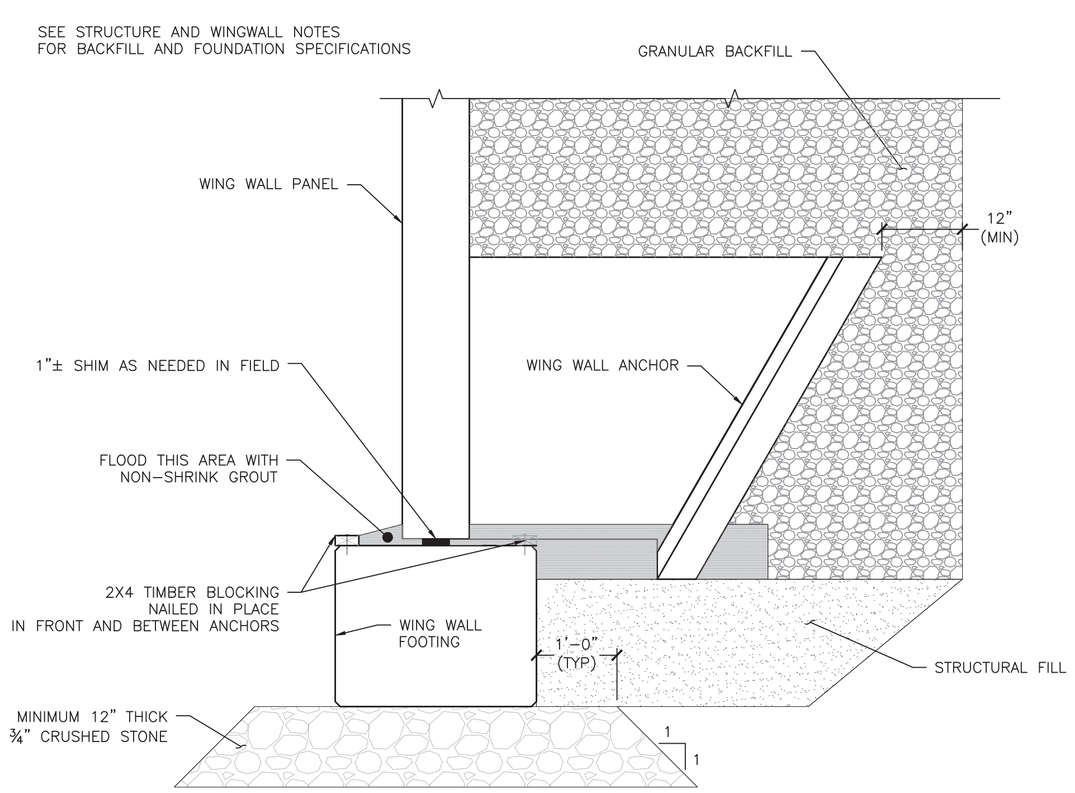

2 S5.0 FOOTING TO WW ATTACHMENT DETAIL
¾" = 1'-0"

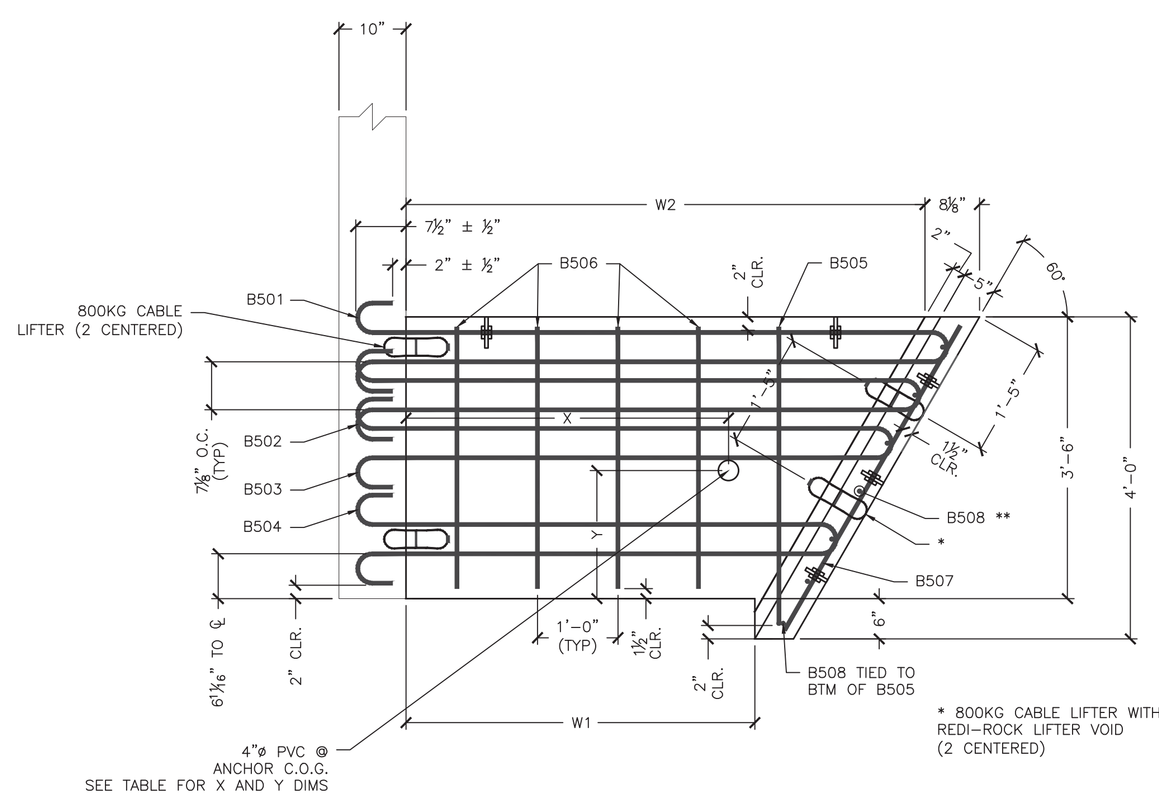

3 S5.0 ANCHOR DETAIL
¾" = 1'-0"

* 800KG CABLE LIFTER WITH
REDI-ROCK LIFTER VOID
(2 CENTERED)

** PLACE (1) B508 THROUGH EACH HOOP BARS,
(1) CENTERED BETWEEN HOOP BARS 503 & 504, AND
(2) BELOW B504 HOOP BAR W/ BOTTOM B508
2" CLEAR FROM BOTTOM (7 TOTAL)

ANCHOR TYPE "B"					
CONCRETE QUANTITY				0.41 CY	
WEIGHT				1740 LB	
W1				1'-4"	
W2				3'-5⅞"	
X =	2'-2⅛"	Y=	1'-8⅜"		
BAR LIST					
MARK	QTY	SIZE	L	TYPE	LENGTH
B501	1	#5	4'-4½"	1	10'-1½"
B502	1	#5	4'-0½"	1	9'-5"
B503	1	#5	3'-8¼"	1	8'-9"
B504	1	#5	3'-0"	1	7'-4½"
B505	2	#5	3'-8½"	2	4'-7"
B506	2	#5	----	Str.	3'-3"
B507	4	#5	----	Str.	4'-4½"
B508	7	#5	----	Str.	2'-3"

ANCHOR TYPE "C"					
CONCRETE QUANTITY				0.48 CY	
WEIGHT				2010 LB	
W1				2'-4"	
W2				4'-5⅜"	
X =	2'-8¾"	Y=	1'-8½"		
BAR LIST					
MARK	QTY	SIZE	L	TYPE	LENGTH
B501	1	#5	5'-4½"	1	12'-1½"
B502	1	#5	5'-0½"	1	11'-5"
B503	1	#5	4'-8¼"	1	10'-9"
B504	1	#5	4'-0"	1	9'-4½"
B505	2	#5	3'-8½"	2	4'-7"
B506	4	#5	----	Str.	3'-3"
B507	4	#5	----	Str.	4'-4½"
B508	7	#5	----	Str.	2'-3"

ANCHOR TYPE "D"					
CONCRETE QUANTITY				0.54 CY	
WEIGHT				2285 LB	
W1				3'-4"	
W2				5'-5⅞"	
X =	3'-5⅛"	Y=	1'-8½"		
BAR LIST					
MARK	QTY	SIZE	L	TYPE	LENGTH
B501	1	#5	6'-4½"	1	14'-1½"
B502	1	#5	6'-0½"	1	13'-5"
B503	1	#5	5'-8¼"	1	12'-9"
B504	1	#5	5'-0"	1	11'-4½"
B505	2	#5	3'-8½"	2	4'-7"
B506	6	#5	----	Str.	3'-3"
B507	4	#5	----	Str.	4'-4½"
B508	7	#5	----	Str.	2'-3"

ANCHOR TYPE "E"					
CONCRETE QUANTITY				0.61 CY	
WEIGHT				2550 LB	
W1				4'-4"	
W2				6'-5⅞"	
X =	4'-0"	Y=	1'-8⅝"		
BAR LIST					
MARK	QTY	SIZE	L	TYPE	LENGTH
B501	1	#5	7'-4½"	1	16'-1½"
B502	1	#5	7'-0½"	1	15'-5"
B503	1	#5	6'-8¼"	1	14'-9"
B504	1	#5	6'-0"	1	13'-4½"
B505	2	#5	3'-8½"	2	4'-7"
B506	8	#5	----	Str.	3'-3"
B507	4	#5	----	Str.	4'-4½"
B508	7	#5	----	Str.	2'-3"

ANCHOR TYPE "F"					
CONCRETE QUANTITY				0.68 CY	
WEIGHT				2860 LB	
W1				5'-4"	
W2				7'-5⅞"	
X =	4'-7⅝"	Y=	1'-8⅝"		
BAR LIST					
MARK	QTY	SIZE	L	TYPE	LENGTH
B501	1	#5	8'-4½"	1	18'-1½"
B502	1	#5	8'-0½"	1	17'-5"
B503	1	#5	7'-8¼"	1	16'-9"
B504	1	#5	7'-0"	1	15'-4½"
B505	2	#5	3'-8½"	2	4'-7"
B506	10	#5	----	Str.	3'-3"
B507	4	#5	----	Str.	4'-4½"
B508	7	#5	----	Str.	2'-3"

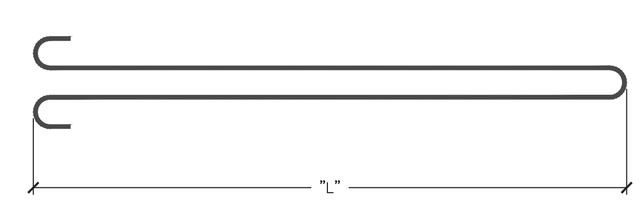

TYPE 1

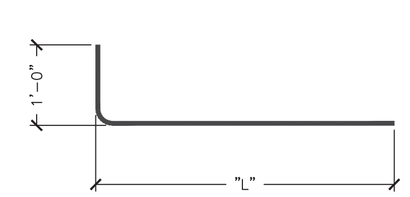

TYPE 2

No.	Date	Revision	By
1	4/15/2015	Revised WW4 angle at contractor's request	PJL
2	4/15/2015	Revised per Statec review 4/10/15	PJL

STATE OF VERMONT
PAUL J. LEMIEUX
No. 9031
Structural I
Licensed Professional Engineer
4/20/15

MICHIE CORPORATION
173 BUXTON INDUSTRIAL DRIVE - PO BOX 870
HENNIKER, NH 03242
PHONE: 603-428-3218
FAX: 603-428-7426
WWW.MICHIECORP.COM

Bridge #52 - VT Route 30 - VAOT STP Culv(31)
Winhall, VT
12'x7' Open Top Box Culvert - Anchor Details

Scale: AS SHOWN
Checked by: XXX
Drawn by: CFP
Designed by: xxx
Project No. 5778
Date: 2/24/2015

Prepared for:
Renaud Brothers, Inc.
283 Fort Bridgeman Rd #2
Vernon, VT 05354

DWG NO.
S5.0

Delta 2015.059.013