DESIGN COMPUTATIONS FOR

VAOT STP Culv (31)
Bridge #47 Route 30
Winhall, VT

PREPARED BY:

Michie Corporation
PO Box 870
Henniker, New Hampshire 03242

REVIEWED BY:

DELTA
ENGINEERS, ARCHITECTS, & LAND SURVEYORS
860 Hooper Road, Endwell, New York 13760
TEL: 607-231-6600 FAX: 607-231-6650
EMAIL: precast@deltaengineers.com
www.deltaengineers.com

STATE OF VERMONT
DARYL D. BURNS
No. 9031
Structural I
LICENSED
PROFESSIONAL ENGINEER

4/20/15

Delta 2015.059.012 Chk: RJA

MICHIE CORPORATION

WHITE MOUNTAIN PRECAST LLC
Serving All Your Precast Bridge Needs

173 Buxton Industrial Drive • PO Box 870 • Henniker, NH 03242 • Tel: 603.428.3218 • 800.322.6949 • Fax: 603.428.7426

DESIGN CALCULATIONS
12'-0" x 7'-0" Open Top Box Culvert
With Precast Anchor Wingwalls

Prepared For:
Renaud Brothers
283 Fort Bridgeman Rd #2
Vernon, VT 05354

Project Information:
VAOT STP Culv (31)
Bridge #47 Route 30
Winhall, VT

Michie Project No: 5779

Delta 2015.059.012 Chk: RJA

CALCULATIONS FOR 12 X 7 OPEN TOP BOX CULVERT - BR #47

References

1. AASHTO LRFD Bridge Design Specifications, 5th Edition.
2. Contract Plans, "Proposed Improvement Bridge Project, Town of Winhall, VT Route 30, Bridge Numbers 47 and 52 VTRANS #STP CULV(31)" by Stantec of South Burlington VT, dated 10/9/14.

Material Information

Concrete:

$f_c := 5000 \frac{lbf}{in^2}$ $\quad Aggregate_{diam} := .75in$ $\quad w_c := 0.145$ $\quad \gamma_c := 150 \frac{lbf}{ft^3}$ $\quad K_1 := 1$

$E_c := 33000 \cdot K_1 \cdot w_c^{1.5} \cdot \sqrt{\frac{f_c}{1000psi}} \cdot ksi = 4074 \cdot ksi$ AASHTO 5.4.2.4-1

Steel:

$f_y := 60000 \frac{lbf}{in^2}$ $\quad E_s := 29000ksi$

Culvert Geometry

$S := 12ft$	Inside Span of Culvert
$H := 7ft$	Inside Rise of Culvert
$t_{leg} := 8in$	Thickness of Leg
$t_{deck} := 10in$	Thickness of Deck
$t_{btm} := 10in$	Thickness of Bottom Slab
$haunch := 9in$	Length of haunch
$cover_{out} := 2.0in$	Cover to top Mat in Deck
$notch := 0in$	Thickness of notch in btm of top slab
$cover_{insidedeck} := 2in + notch = 2 \cdot in$	Cover to inside mat in deck
$cover := 2in$	Cover everywhere else
$b_w := 12in$	Design Section Width

Assumptions

The structure will be analyzed for load combinations at two stages:
1. Construction Loading - After backfilling of the lower half of the structure and with live load surcharge applied to the walls. No top slab.
2. In-service condition - After installation of the top slab and backfilling to finished grade.

Weepholes will be installed in the box culvert, which will prevent hydrostatic pressure from developing behind the culvert walls.

Structure will be analyzed as a 1'-0" wide strip.The structure will be modeled as a centerline model. The soil loads will be calculated according to actual outside dimensions. The top slab will be assumed hinged at the top of the legs. The haunch will be ignored at the top slab for modeling purposes, but will be used to determine the critical section in the top slab.

The base slab is continuously supported by the foundation soil beneath it. This will be modeled by soils springs. Sping constant, in kips/in, is dependent on the spacing of the springs. Reference for calculation based on Modulus of Subgrade Reaction k = 200psi per in, "Pavement Analysis and Design" Figure 7.36, Huang, YH, 1993.

One end of the base will also be fixed wrt translation in the x and z directions and rotation about the x and y directions.

The structure will have the following locations analyzed:
1M. Outside Leg Moment (at or below the haunch) for negative moments at the knee.
2M. Inside Leg (if applicable) for positive moments in the leg.
3S. Leg for Shear
4M. Outside Bottom Deck Moment (at or inside the haunch) for negative moments at the knee.
5M. Inside Bottom Deck Moment (usually near midspan) for positive moments in the deck.
6S. Bottom Deck for Shear (at or inside the haunch).
7M. Inside Top Deck Moment (usually near midspan) for positive moments in the deck.
8S. Top Deck for Shear (at or near the inside face of the leg).

Per 12.5.2 and 12.5.3, this structure shall be investigated at Service Load Combination I and Strength Load Combinations I & II.

Due to curbwall and assumed distance from curb to wheel load, traffic cannot come within 24" of the end of the culvert, therefore an Edge Beam is not required per 12.11.2.1. The area of the deck supporting the curbwall will not have an independent check because after the curbwall is attached the design section becomes significantly deeper (including the depth of curbwall).

The contract plans show a culvert with 13ft of earth cover. AASHTO 12.11.2.1 states that for culverts with 2ft or more of fill, wheel loads shall be distributed as specified in section 3.6.1.2.6, which states, for single span culverts with depths of fill greater than both 8ft and the span length, live load may be neglected.

Soil backfill material assumptions as follows:

Dry unit weight of soil = 140 pcf. Soil Friction angle = 34-degrees. Concrete unit weight: 150 pcf

Design Parameters:

$\eta_D := 1.00$

Ductility Load Modifier (AASHTO 1.3.3) Conventional. Design complying with LRFD Specifications

$\eta_R := 1.0$

$\eta_{R.earth} := 1.05$

Redundancy Load Modifiers (AASHTO 1.3.4) Conventional levels of Redundancy.
Note: per 12.5.4, Buried structures will be considered nonredundant under earth loads. Therefore, basic load cases applying earth loads will be multiplied by 1.05.

$\eta_I := 1.00$

Importance Load Modifier (AASHTO 1.3.5) typical bridge

$\eta_i := \eta_D \cdot \eta_R \cdot \eta_I = 1$

$\eta_{i.earth} := \eta_D \cdot \eta_{R.earth} \cdot \eta_I = 1.05$

Load Modifiers (AASHTO 1.3.2.1)
(it will be applied to the BLCs below)

$\phi_{moment} := 0.90$

$\phi_{shear} := 0.90$

$\phi_{axial} := 0.90$

Per AASHTO 5.5.4.2.1

β_1 = Stress Block Factor specified in Article 5.7.2.2

$$\beta_1 := \max\left[.65, \left[\begin{array}{l} .85 \quad \text{if } f_c < 4000\text{psi} \\ .85 - \frac{.05}{\text{psi}} \cdot \left(\frac{f_c - 4000\text{psi}}{1000}\right) \quad \text{otherwise} \end{array}\right]\right] \qquad \beta_1 = 0.8$$

$\gamma_w := 62.4 \frac{lb}{ft^3}$ $\qquad k_w := 1$

Site Conditions

$H_{overburden} := 13ft$

Depth of Soil over the Top of Deck

Backfill

$\gamma_{soil} := 140 \frac{lb}{ft^3}$

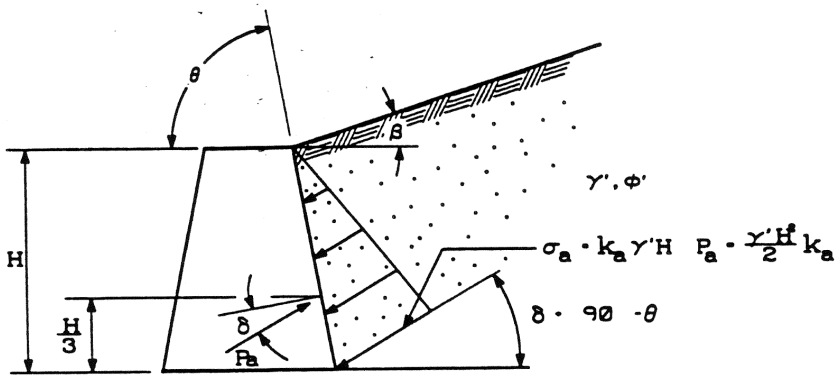

$$k_a = \frac{\sin^2(\theta - \phi')}{\sin^2\theta \, \sin(\theta - \delta)\left[1 + \sqrt{\frac{\sin(\phi' - \delta)\,\sin(\phi' - \beta)}{\sin(\theta - \delta)\,\sin(\theta - \beta)}}\right]^2}$$

γ' = EFFECTIVE UNIT WEIGHT
ϕ' = EFFECTIVE ANGLE OF INTERNAL FRICTION
δ = ANGLE OF WALL FRICTION (SEE TABLE 5.5.2B)
β = SLOPE ANGLE
θ = WALL FACE BATTER
ALL ANGLES ARE POSITIVE (+) AS SHOWN

FIGURE 5.5.2A Computational Procedures for Active Earth Pressures (Coulomb Analysis)

$\phi := 34deg$ $\beta := 0deg$ $\delta := \frac{2}{3} \cdot \phi$ $\delta = 22.667 \cdot deg$ $\theta := 90deg$

$k_a := 1 - \sin(\phi) = 0.441$ Conservatively use at rest earth pressure condition

Basic Load Cases for Risa-3D

BLC #1 - Dead Load of Structure (DC)
BLC #2 - Earth Pressure against Left Leg (EH)
BLC #3 - Earth Pressure against Right Leg (EH)
BLC #4 - Overburden Soil Pressure on Both Legs. This is the pressure exerted on the legs from the overburden soil when backfilling is complete to proposed finished grade. (ES)
BLC #5 - Overburden Soil Pressure on the Bridge Deck. (EV)
BLC #6 - Live Load Surcharge on the Left Leg. (LS)
BLC #7 - Live Load Surcharge on the Right Leg. (LS)

Moving Load Cases for Risa-3D

ML#1 - N/A
ML#2 - N/A

Determine load for each BLC

BLC #2 & BLC #3:

These load cases apply earth pressure to the culvert legs from the submerged soil that is backfilled just to the top of the legs. The value of the distributed pressure at the bottom of the leg is:

$$\sigma_{legbackfill} := \eta_{i.earth} \cdot k_a \cdot \gamma_{soil} \cdot (H + t_{btm}) \qquad \sigma_{legbackfill} = 507.589 \frac{lb}{ft^2}$$

BLC #4:

This load case applies earth pressure to the frame legs from the soil that is backfilled over the the box culvert. The value of the distributed pressure along the entire leg is:

$$\sigma_{legoverburden} := \eta_{i.earth} \cdot k_a \cdot \gamma_{soil} \cdot (H_{overburden} + t_{deck}) \qquad \sigma_{legoverburden} = 896.381 \frac{lb}{ft^2}$$

BLC #5:

This load case applies earth pressure to the deck from the soil that is backfilled over the the box culvert. The value of the distributed pressure along the entire deck is:

$$\sigma_{deckoverburden} := \eta_{i.earth} \cdot \gamma_{soil} \cdot H_{overburden} \qquad \sigma_{deckoverburden} = 1911 \frac{lb}{ft^2}$$

BLC #6 & BLC#7:

These load cases apply LL surcharge earth pressure to the legs. The equivalent height of soil is given by AASHTO Table 3.11.6.4-1:

$$H_{LS}(n) := \begin{cases} 4ft & \text{if } n \le 5ft \\ 4ft - \dfrac{n - 5ft}{5} & \text{if } 5ft < n \le 10ft \\ 3ft - \dfrac{n - 10ft}{10} & \text{if } 10ft < n \le 20ft \\ 2ft & \text{otherwise} \end{cases}$$

Height of Soil for Vehicular Loading on Abutments Perpendicular to Traffic. Table 3.11.6.4-1

$$H_{LS}\left(H + t_{btm} + t_{deck} + H_{overburden}\right) = 2\ ft$$

The value of the distributed pressure along the entire leg is:

$$\sigma_{legLL} := k_a \cdot \gamma_{soil} \cdot H_{LS}\left(H + t_{btm} + t_{deck} + H_{overburden}\right) \qquad \sigma_{legLL} = 123.426\ \frac{lb}{ft^2}$$

Moving Loads ML1 and ML2:

Live load is neglected due to depth of fill

Load Combinations for Risa-3D

Strength I Load Factors (AASHTO Table 3.4.1-1 and 3.4.1-2)

LC#1 = 1.25(BLC#1)
LC#2 = 1.25(BLC#1) + 1.5(BLC#2)
To check structure for backfill behind one leg only.
LC#3 = 1.25(BLC#1) + 1.5(BLC#2 + BLC#3) + 1.75(BLC#6 + BLC#7))
To check structure when it is backfilled to top of legs and a construction live load is present for placing stone fill in the culvert. Use maximum load factors for EH and LS to increase the effect on negative moments in the knees.
LC#4 = 1.25(BLC#1) + 0.9(BLC#2+BLC#3) + 0.75(BLC#4) + 1.3(BLC#5)
To check structure when it is backfilled to final grade. Minimum load factors on horizontal loads to maximize positive moment in the deck.
LC#5 = 1.25(BLC#1) + 1.5(BLC#2 + BLC#3) + 1.5(BLC#4) + 1.3(BLC#5)
To check structure when it is backfilled to final grade. Maximum load factors on horizontal loads to increase the negative moments in the knees.
LC#6 = 1.25(BLC#1) + 1.5(BLC#2 + BLC#3) + 1.5(BLC#4) + 1.3(BLC#5) + 1.75(BLC#6)
Applying LL surcharge behind the left leg only. Maximum load factors on horizontal loads to increase the negative moment in the knees.
LC#7 = 1.25(BLC#1) + 1.5(BLC#2 + BLC#3) + 1.5(BLC#4) + 1.3(BLC#5) + 1.75(BLC#6+BLC#7)
Applying LL surcharge behind both legs. Maximum load factors on horizontal loads to increase the negative moment in the knees.

Strength II Load Factors (AASHTO Table 3.4.1-1 and 3.4.1-2)

By inspection, Strength I load combinations control

Service I Load Factors (AASHTO Table 3.4.1-1 and 3.4.1-2)

Note: A separate model is run for the service load cases

LC#1 = 1.00(BLC#1)
LC#2 = 1.00(BLC#1) + 1.00(BLC#2)
To check structure for backfill behind one leg only.
LC#3 = 1.00(BLC#1) + 1.00(BLC#2 + BLC#3) + 1.00(BLC#6 + BLC#7))
To check structure when it is backfilled to top of legs and a construction live load is present for placing stone fill in the culvert. Use maximum load factors for EH and LS to increase the effect on negative moments in the knees.
LC#4 = 1.00(BLC#1) + 1.00(BLC#2+BLC#3) + 1.00(BLC#4) + 1.00(BLC#5)
To check structure when it is backfilled to final grade. Minimum load factors on horizontal loads to maximize positive moment in the deck.
LC#5 = 1.00(BLC#1) + 1.00(BLC#2 + BLC#3) + 1.00(BLC#4) + 1.00(BLC#5)
To check structure when it is backfilled to final grade. Maximum load factors on horizontal loads to increase the negative moments in the knees.
LC#6 = 1.00(BLC#1) + 1.00(BLC#2 + BLC#3) + 1.00(BLC#4) + 1.00(BLC#5) + 1.00(BLC#6)
Applying LL surcharge behind the left leg only. Maximum load factors on horizontal loads to increase the negative moment in the knees.
LC#7 = 1.00(BLC#1) + 1.00(BLC#2 + BLC#3) + 1.00(BLC#4) + 1.00(BLC#5) + 1.00(BLC#6+BLC#7)
Applying LL surcharge behind both legs. Maximum load factors on horizontal loads to increase the negative moment in the knees.

Determine Number of RISA Design Sections

Need to choose number of sections such that RISA reports forces close to critical locations in the structure.

Number of Design Sections in RISA. $n_{sections} := 13$

Length of Leg in Model

$$H + \frac{1}{2}\cdot\left(t_{deck} + t_{btm}\right) = 94\cdot in$$

Closest Design Section in Leg

$sec_{leg} := 11$

Each Leg Section is:

$$\frac{H + \frac{1}{2}\cdot\left(t_{deck} + t_{btm}\right)}{n_{sections} - 1} = 7.833\cdot in$$

Location of Leg Design Section:

$$\frac{H + t_{deck}}{n_{sections} - 1}\cdot\left(sec_{leg} - 1\right) = 78.333\cdot in$$

Critical Section of Leg is at:

$$H + \frac{1}{2}\cdot t_{deck} - haunch = 80\cdot in$$

Length of Deck in Model

$$S + t_{leg} = 152\cdot in$$

Closest Design Section in Deck

$sec_{deck} := 2$

Each Deck Section is:

$$\frac{S + t_{leg}}{n_{sections} - 1} = 12.667\cdot in$$

Location of Deck Design Section:

$$\frac{S + t_{leg}}{n_{sections} - 1}\cdot\left(sec_{deck} - 1\right) = 12.667\cdot in$$

Critical Section of Deck is at:

$$\frac{1}{2}\cdot t_{leg} + haunch = 13\cdot in$$

Length of Btm in Model

$$S + t_{leg} = 152\cdot in$$

Closest Design Section in Btm

$sec_{btm} := 2$

Each Btm Section is:

$$\frac{S + t_{leg}}{n_{sections} - 1} = 12.667\cdot in$$

Location of Btm Design Section:

$$\frac{S + t_{leg}}{n_{sections} - 1}\cdot\left(sec_{btm} - 1\right) = 12.667\cdot in$$

Critical Section of Btm is at:

$$\frac{1}{2}\cdot t_{leg} + haunch = 13\cdot in$$

Calculate Sping Constant and Spring Spacing

$k_m := 0.200 \frac{ksi}{in}$ — Modulus of Subgrade Reaction per Figure 7.36 Pavement Analysis and Design, Huang 1993 Based on Assumed bearing value of 3000psf = 20psi

$n_{spring} := 13$ — Number of Soil Springs

$s_{spring} := \frac{S + t_{leg}}{n_{spring} - 1} = 1.056\,ft$ — Soil Spring Spacing

$k_{spring} := k_m \cdot s_{spring} \cdot b_w = 30.4 \cdot \frac{kip}{in}$ — Spring Constant

Check Outside Leg Moment (Design Section 1M):
Service Limit State

Check Crack Control in Section 5.7.3.4

$Ms_{outsideleg} := 7.912 kip \cdot ft$ — Load Case #6

$Ns_{outsideleg} := -13.499 kip$ — Min value at same section as Ms

Bar Layout: $bar_{outsideleg} := 6$ $s_{outsideleg} := 7in$

$diam_{outsideleg} := \frac{bar_{outsideleg}}{8} in$ $diam_{outsideleg} = 0.75 \cdot in$

$As_{outsideleg} := \frac{\pi \cdot diam_{outsideleg}^2}{4} \cdot 12 \frac{in}{s_{outsideleg}}$ $As_{outsideleg} = 0.76 \cdot in^2$

$d_{outsideleg} := t_{leg} - cover_{out} - \frac{diam_{outsideleg}}{2}$ $d_{outsideleg} = 5.625 \cdot in$

Stress in reinforcement calculated per MacGregor
"Reinforced Concrete Mechanics and Design" 4th Ed, Section 9-2

$\eta := \frac{E_s}{E_c} = 7.118$

$\rho_{outsideleg} := \frac{As_{outsideleg}}{b_w \cdot d_{outsideleg}} = 0.011$

$$k := \sqrt{2\rho_{outsideleg} + \left(\rho_{outsideleg} \cdot \eta\right)^2} - \rho_{outsideleg} \cdot \eta$$

$$j_{outsideleg} := 1 - \frac{k}{3} = 0.97$$

$$fss_{outsideleg} := \frac{Ms_{outsideleg} + Ns_{outsideleg} \cdot \left(d_{outsideleg} - \frac{t_{leg}}{2}\right)}{As_{outsideleg} \cdot j_{outsideleg} \cdot d_{outsideleg}} = 17.667 \cdot ksi$$

Stress in Reinforcement at Service Limit State

$$d_{c_outsideleg} := t_{leg} - d_{outsideleg} \qquad d_{c_outsideleg} = 2.375 \cdot in$$

$$\beta_s := 1 + \frac{d_{c_outsideleg}}{0.7 \cdot \left(t_{leg} - d_{c_outsideleg}\right)} \qquad \beta_s = 1.603$$

$$\gamma_e := 1.00$$ exposure factor

$$s_{max1} := \frac{700 \frac{kip}{in} \cdot \gamma_e}{\beta_s \cdot fss_{outsideleg}} - 2 \cdot d_{c_outsideleg} \qquad \boxed{s_{max1} = 19.964 \cdot in}$$

Check Minimum Bar Spacing in Section 5.10.3.1.2:

$$s_{min} := \max\left(diam_{outsideleg}, 1.33 Aggregate_{diam}, 1in\right) \qquad \boxed{s_{min} = 1 \cdot in}$$

Check Maximum Bar Spacing in Section 5.10.3.2:

$$s_{max2} := \min\left(1.5 \cdot t_{leg}, 18in\right) \qquad \boxed{s_{max2} = 12 \cdot in}$$

$$\boxed{s_{outsideleg} = 7 \cdot in}$$

$$CheckSpacing_{Outsideleg} := \begin{cases} \text{"OK"} & \text{if } s_{min} \le s_{outsideleg} \le \min\left(s_{max1}, s_{max2}\right) \\ \text{"NG"} & \text{otherwise} \end{cases} = \text{"OK"}$$

Check Deflection Control (AASHTO 2.5.2.6.2):

Not Applicable to Legs

Strength Limit State

Flexural Resistance in Section 5.7.3.2

$Mu_{outsideleg} := 10.456 kip \cdot ft$ Load Case #6

$Nu_{outsideleg} := -17.479 kip$ Min value at the same section & LC as $Mu_{outsideleg}$
+ if tensile, - if compressive

$Vu_{outsideleg} := 8.073 kip$ Max value at the same section & LC as $Mu_{outsideleg}$

Verify that f_y can be substituted for f_s in the equations of 5.7.3.2. This is allowed when $\frac{c}{d_s} \le 0.60$.

$c := \frac{As_{outsideleg} \cdot f_y}{0.85 \cdot f_c \cdot \beta_1 \cdot b_w}$ $c = 1.114 \cdot in$ Simplified equation 5.7.3.1.2-4

$\frac{c}{d_{outsideleg}} = 0.198$ **This is less than 0.60 therefore f_y can be substituted for f_s**

$a_{outsideleg} := \beta_1 \cdot c$ $a_{outsideleg} = 0.891 \cdot in$

$Mn_{outsideleg} := As_{outsideleg} \cdot f_y \cdot \left(d_{outsideleg} - \frac{a_{outsideleg}}{2} \right)$

$Mr_{outsideleg} := \phi_{moment} \cdot Mn_{outsideleg}$

$Mr_{outsideleg} = 17.652 \cdot kip \cdot ft$

$Mu_{outsideleg} = 10.456 \cdot kip \cdot ft$

$$CheckMoment_{OutsideLeg} := \begin{cases} \text{"OK"} & \text{if } Mu_{outsideleg} < Mr_{outsideleg} \\ \text{"NG"} & \text{otherwise} \end{cases} = \text{"OK"}$$

Minimum Reinforcement in Section 5.7.3.3.2

$f_r := 0.24 \cdot \sqrt{f_c \cdot ksi}$ $\quad f_r = 0.537 \cdot ksi$ 5.4.2.6

$I_{g_leg} := \frac{b_w \cdot t_{leg}^3}{12}$ $\quad I_{g_leg} = 512 \cdot in^4$

$y_{t_leg} := \frac{t_{leg}}{2}$ $\quad y_{t_leg} = 4 \cdot in$

$S_{c_leg} := \frac{I_{g_leg}}{y_{t_leg}} = 128 \cdot in^3$

$\gamma_1 := 1.2$ For precast members

$\gamma_3 := 0.67$ 0.67 for deformed bar

$M_{cr_leg} := \gamma_3 \cdot \gamma_1 \cdot f_r \cdot S_{c_leg}$ $\quad \boxed{M_{cr_leg} = 4.602 \cdot kip \cdot ft}$ 5.7.3.3.2

$\boxed{1.33 \cdot Mu_{outsideleg} = 13.906 \cdot kip \cdot ft}$

The factored resistance shall be at least equal to the lesser of the above two values.

$$CheckMinRein_{Outsideleg1} := \begin{cases} \text{"OK"} & \text{if } Mr_{outsideleg} \geq \min(M_{cr_leg}, 1.33 \cdot Mu_{outsideleg}) \\ \text{"NG"} & \text{otherwise} \end{cases} = \text{"OK"}$$

Minimum Reinforcement in Section 12.11.4.3.2

$\rho_{outsideleg} := \frac{As_{outsideleg}}{t_{leg} \cdot b_w}$ $\quad \boxed{\rho_{outsideleg} = 0.008}$

$\boxed{\rho_{min} := .002}$

$$CheckMinReinf_{Outsideleg2} := \begin{cases} \text{"OK"} & \text{if } \rho_{outsideleg} \geq \rho_{min} \\ \text{"NG"} & \text{otherwise} \end{cases} = \text{"OK"}$$

Check Inside Frame Leg Moment (Design Section 2M):

Service Limit State

Check Crack Control in Section 5.7.3.4

$Ms_{insideleg} := 3.613kip \cdot ft$

Load Case #7

$Ns_{insideleg} := -13.121kip$

Min value at same section as Ms

Rebar Layout

$bar_{insideleg} := 4$

$s_{insideleg} := 9in$

$diam_{insideleg} := \frac{bar_{insideleg}}{8} in$

$diam_{insideleg} = 0.5 \cdot in$

$As_{insideleg} := \frac{\pi \cdot diam_{insideleg}^2}{4} \cdot 12 \frac{in}{s_{insideleg}}$

$As_{insideleg} = 0.26 \cdot in^2$

$d_{insideleg} := t_{leg} - cover - \frac{diam_{insideleg}}{2}$

$d_{insideleg} = 5.75 \cdot in$

Stress in reinforcement calculated per MacGregor
"Reinforced Concrete Mechanics and Design" 4th Ed, Section 9-2

$\eta := \frac{E_s}{E_c} = 7.118$

$\rho_{insideleg} := \frac{As_{insideleg}}{b_w \cdot d_{insideleg}} = 0.004$

$k := \sqrt{2\rho_{insideleg} + (\rho_{insideleg} \cdot \eta)^2} - \rho_{insideleg} \cdot \eta$

$j_{insideleg} := 1 - \frac{k}{3} = 0.979$

$fss_{insideleg} := \frac{Ms_{insideleg} + Ns_{insideleg} \cdot \left(d_{insideleg} - \frac{t_{leg}}{2}\right)}{As_{insideleg} \cdot j_{insideleg} \cdot d_{insideleg}} = 13.844 \cdot ksi$

Stress in Reinforcement at Service Limit State

$d_{c_insideleg} := t_{leg} - d_{insideleg}$

$d_{c_insideleg} = 2.25 \cdot in$

$\beta_s := 1 + \frac{d_{c_insideleg}}{0.7 \cdot (t_{leg} - d_{c_insideleg})}$

$\beta_s = 1.559$

$\gamma_e := 1.00$ exposure factor

$$s_{max1} := \frac{700\frac{kip}{in}\cdot\gamma_e}{\beta_s\cdot fss_{insideleg}} - 2\cdot d_{c_insideleg}$$ $s_{max1} = 27.933\cdot in$

Check Minimum Bar Spacing in Section 5.10.3.1.2:

$s_{min} := \max(diam_{insideleg}, 1.33Aggregate_{diam}, 1in)$ $s_{min} = 1\cdot in$

Check Maximum Bar Spacing in Section 5.10.3.2:

$s_{max2} := \min(1.5\cdot t_{leg}, 18in)$ $s_{max2} = 12\cdot in$

$s_{insideleg} = 9\cdot in$

$$CheckSpacing_{insideleg} := \begin{cases} \text{"OK"} & \text{if } s_{min} \le s_{insideleg} \le \min(s_{max1}, s_{max2}) \\ \text{"NG"} & \text{otherwise} \end{cases} = \text{"OK"}$$

Check Deflection Control (AASHTO 2.5.2.6.2):

Not Applicable to Legs

Strength Limit State

Flexural Resistance in Section 5.7.3.2

$Mu_{insideleg} := 6.28kip\cdot ft$ Load Case #7

$Nu_{insideleg} := -17.006kip$ Min value at the same section & LC as $Mu_{insideleg}$
+ if tensile, - if compressive

$Vu_{insideleg} := 0.148kip$ Max value at the same section & LC as $Mu_{insideleg}$

Verify that f_y can be substituted for f_s in the equations of 5.7.3.2. This is allowed when

$\frac{c}{d_s} \le 0.60$.

$c := \frac{As_{insideleg} \cdot f_y}{0.85 \cdot f_c \cdot \beta_1 \cdot b_w}$ $\quad c = 0.385 \cdot in$ Simplified equation 5.7.3.1.2-4

$\frac{c}{d_{insideleg}} = 0.067$ **This is less than 0.60 therefore f_y can be substituted for f_s**

$a_{insideleg} := \beta_1 \cdot c$ $\quad a_{insideleg} = 0.308 \cdot in$

$Mn_{insideleg} := As_{insideleg} \cdot f_y \cdot \left(d_{insideleg} - \frac{a_{insideleg}}{2} \right)$

$Mr_{insideleg} := \phi_{moment} \cdot Mn_{insideleg}$

$\boxed{Mr_{insideleg} = 6.593 \cdot kip \cdot ft}$

$Mu_{insideleg} = 6.28 \cdot kip \cdot ft$

$$CheckMoment_{InsideLeg} := \begin{cases} \text{"OK"} & \text{if } Mu_{insideleg} < Mr_{insideleg} \\ \text{"NG"} & \text{otherwise} \end{cases} = \text{"OK"}$$

Minimum Reinforcement in Section 5.7.3.3.2

$f_r := 0.24 \cdot \sqrt{f_c \cdot ksi}$ $\quad f_r = 0.537 \cdot ksi$ 5.4.2.6

$I_{g_leg} := \frac{b_w \cdot t_{leg}^3}{12}$ $\quad I_{g_leg} = 512 \cdot in^4$

$y_{t_leg} := \frac{t_{leg}}{2}$ $\quad y_{t_leg} = 4 \cdot in$

$S_{c_leg} := \frac{I_{g_leg}}{y_{t_leg}} = 128 \cdot in^3$

$\gamma_1 := 1.2$ For precast members

$\gamma_3 := 0.67$ 0.67 for deformed bar

$M_{cr_leg} := \gamma_3 \cdot \gamma_1 \cdot f_r \cdot S_{c_leg}$ $\quad \boxed{M_{cr_leg} = 4.602 \cdot kip \cdot ft}$ 5.7.3.3.2

$$1.33 \cdot Mu_{insideleg} = 8.352 \cdot kip \cdot ft$$

The factored resistance shall be at least equal to the lesser of the above two values.

$$CheckMinRein_{Insideleg1} := \begin{cases} \text{"OK"} & \text{if } Mr_{insideleg} \geq \min(M_{cr_leg}, 1.33 \cdot Mu_{insideleg}) \\ \text{"NG"} & \text{otherwise} \end{cases} = \text{"OK"}$$

Minimum Reinforcement in Section 12.11.4.3.2

$$\rho_{insideleg} := \frac{As_{insideleg}}{t_{leg} \cdot b_w}$$

$$\rho_{insideleg} = 0.003$$

$$\rho_{min} := .002$$

$$CheckMinRein_{Insideleg2} := \begin{cases} \text{"OK"} & \text{if } \rho_{insideleg} \geq \rho_{min} \\ \text{"NG"} & \text{otherwise} \end{cases} = \text{"OK"}$$

Check Leg Shear (Design Section 3S): Strength Limit State

$$d_{v_leg} := \min\left(\frac{Mn_{insideleg}}{As_{insideleg} \cdot f_y}, \frac{Mn_{outsideleg}}{As_{outsideleg} \cdot f_y}\right)$$ C5.8.2.9-1

$$d_{v_leg} = 5.18 \cdot in$$ Conservatively taking the smallest value for the leg.

$$Vu_{leg} := 8.073kip$$ Load Case #6

$$Mu_{leg_RISA} := 10.456kip \cdot ft$$ Max value at the same section & LC as Vu_{leg}

$$Nu_{leg} := -17.479kip$$ Min value at the same section & LC as Vu_{leg}
+ if tensile, - if compressive

Note: This is a conservative approach, since we are taking the worse values for each of

shear, moment, and axial.

Determine Shear Resistance Section 5.8.3.4.2

The section contains less than the minimum transverse reinforcement specified in 5.8.2.5, therefore use equation 5.8.3.4.2-2 to determine the longitudinal strain (ξ_x) at the location of maximum shear.

$Mu_{leg} := \max(Mu_{leg_RISA}, Vu_{leg} \cdot d_{v_leg})$ $\qquad Mu_{leg} = 10.456 \cdot kip \cdot ft$

In the eqtn below Mu shall not be less than $Vu \cdot d_v$

$$\xi_{sleg} := \frac{\frac{|Mu_{leg}|}{d_{v_leg}} + 0.5Nu_{leg} + |Vu_{leg}|}{E_s \cdot As_{outsideleg}} \qquad (5.8.3.4.2\text{-}4) \qquad 1000 \cdot \xi_{sleg} = 1.07$$

$s_{x_leg} := d_{v_leg}$

$$s_{xe_leg} := s_{x_leg} \cdot \frac{1.38in}{Aggregate_{diam} + 0.63in} = 5.18 \cdot in \qquad (5.8.3.4.2\text{-}5)$$

$$\beta_{leg} := \left(\frac{4.8}{1 + 750 \cdot \xi_{sleg}}\right) \cdot \left(\frac{51}{39 + \frac{s_{xe_leg}}{1in}}\right) = 3.071 \qquad (5.8.3.4.2\text{-}2)$$

$$\Theta_{leg} := 29deg + 3500deg \cdot \xi_{sleg} = 32.754 \cdot deg \qquad (5.8.3.4.2\text{-}3)$$

$$Vn_{leg} := \min\left(0.25 \cdot f_c \cdot b_w \cdot d_{v_leg}, 0.0316 \cdot \beta_{leg} \cdot \sqrt{f_c \cdot ksi} \cdot b_w \cdot d_{v_leg}\right) = 13.486 \cdot kip$$

$Vr_{leg} := \phi_{shear} \cdot Vn_{leg} = 12.137 \cdot kip$

$Vu_{leg} = 8.073 \cdot kip$

$$Check_{Vr} := \begin{cases} \text{"OK"} & \text{if } Vr_{leg} \geq Vu_{leg} \\ \text{"NG"} & \text{otherwise} \end{cases} = \text{"OK"}$$

Note: Per 5.8.2.4, Slabs, Footings, and Culverts are exempt from requiring transverse steel when $Vu > 0.5\phi Vc$.

Check Longitudinal Reinforcement per Section 5.8.3.5

Need to check each section investigated. Section 1M, 2M, & 3S.

Section 1M:

$Mu_{outsideleg} = 10.456 \cdot kip \cdot ft$ Restated from above

$Nu_{outsideleg} = -17.479 \cdot kip$ Restated from above

$Vu_{outsideleg} = 8.073 \cdot kip$ Restated from above

$As_{outsideleg} \cdot f_y = 45.441 \cdot kip$

Equation 5.8.3.5-1

$$long_{1M} := \frac{|Mu_{outsideleg}|}{d_{v_leg} \cdot \phi_{moment}} + 0.5 \cdot \frac{Nu_{outsideleg}}{\phi_{axial}} + \left| \frac{Vu_{outsideleg}}{\phi_{shear}} \right| \cdot \cot(\Theta_{leg}) = 31.149 \cdot kip$$

$$Check_{long1M} := \begin{cases} \text{"OK"} & \text{if } As_{outsideleg} \cdot f_y \geq long_{1M} \\ \text{"NG"} & \text{otherwise} \end{cases} = \text{"OK"}$$

Section 2M:

$Mu_{insideleg} = 6.28 \cdot kip \cdot ft$ Restated from above

$Nu_{insideleg} = -17.006 \cdot kip$ Restated from above

$Vu_{insideleg} = 0.148 \cdot kip$ Restated from above

$As_{insideleg} \cdot f_y = 15.708 \cdot kip$

Equation 5.8.3.5-1

$$long_{2M} := \frac{|Mu_{insideleg}|}{d_{v_leg} \cdot \phi_{moment}} + 0.5 \cdot \frac{Nu_{insideleg}}{\phi_{axial}} + \left| \frac{Vu_{insideleg}}{\phi_{shear}} \right| \cdot \cot(\Theta_{leg}) = 6.974 \cdot kip$$

$$Check_{long2M} := \begin{cases} \text{"OK"} & \text{if } As_{insideleg} \cdot f_y \geq long_{2M} \\ \text{"NG"} & \text{otherwise} \end{cases} = \text{"OK"}$$

Section 3S:

$Mu_{leg} = 10.456 \cdot kip \cdot ft$ Restated from above

$Nu_{leg} = -17.479 \cdot kip$ Restated from above

$Vu_{leg} = 8.073 \cdot kip$ Restated from Above

This design section is in the negative moment area near the knee so use outside leg reinforcing information.

$As_{outsideleg} \cdot f_y = 45.441 \cdot kip$

Equation 5.8.3.5-1

$$long_{3S} := \frac{|Mu_{leg}|}{d_{v_leg} \cdot \phi_{moment}} + 0.5 \cdot \frac{Nu_{leg}}{\phi_{axial}} + \left| \frac{Vu_{leg}}{\phi_{shear}} \right| \cdot \cot(\Theta_{leg}) = 31.149 \cdot kip$$

$$Check_{long3S} := \begin{cases} \text{"OK"} & \text{if } As_{outsideleg} \cdot f_y \geq long_{3S} \\ \text{"NG"} & \text{otherwise} \end{cases} = \text{"OK"}$$

Check Outside Frame Btm Slab Moment (Design Section 4M): Service Limit State

Check Crack Control in Section 5.7.3.4

$Ms_{outsidebtm} := 8.102 kip \cdot ft$ Load Case #3

$Ns_{outsidebtm} := -2.953 kip$ Min value at same section as Ms

Rebar Layout: $bar_{outsidebtm} := 6$ $s_{outsidebtm} := s_{outsideleg} = 7 \cdot in$

$$diam_{outsidebtm} := \frac{bar_{outsidebtm}}{8} in \qquad diam_{outsidebtm} = 0.75 \cdot in$$

$$As_{outsidebtm} := \frac{\pi \cdot diam_{outsidebtm}^2}{4} \cdot 12 \frac{in}{s_{outsidebtm}} \qquad As_{outsidebtm} = 0.76 \cdot in^2$$

$$d_{outsidebtm} := t_{btm} - cover - \frac{diam_{outsidebtm}}{2} \qquad d_{outsidebtm} = 7.625 \cdot in$$

Stress in reinforcement calculated per MacGregor
"Reinforced Concrete Mechanics and Design" 4th Ed, Section 9-2

$$\eta := \frac{E_s}{E_c} = 7.118$$

$$\rho_{outsidebtm} := \frac{As_{outsidebtm}}{b_w \cdot d_{outsidebtm}} = 0.008$$

$$k := \sqrt{2\rho_{outsidebtm} + \left(\rho_{outsidebtm} \cdot \eta\right)^2} - \rho_{outsidebtm} \cdot \eta$$

$$j_{outsidebtm} := 1 - \frac{k}{3} = 0.972$$

$$fss_{outsidebtm} := \frac{Ms_{outsidebtm} + Ns_{outsidebtm} \cdot \left(d_{outsidebtm} - \frac{t_{btm}}{2}\right)}{As_{outsidebtm} \cdot j_{outsidebtm} \cdot d_{outsidebtm}} = 15.932 \cdot ksi$$

Stress in Reinforcement at Service Limit State

$$d_{c_outsidebtm} := t_{btm} - d_{outsidebtm}$$ $$d_{c_outsidebtm} = 2.375 \cdot in$$

$$\beta_s := 1 + \frac{d_{c_outsidebtm}}{0.7 \cdot \left(t_{btm} - d_{c_outsidebtm}\right)}$$ $$\beta_s = 1.445$$

$$\gamma_e := 1.00$$ exposure factor

$$s_{max1} := \frac{700 \frac{kip}{in} \cdot \gamma_e}{\beta_s \cdot fss_{outsidebtm}} - 2 \cdot d_{c_outsidebtm}$$ $$\boxed{s_{max1} = 25.656 \cdot in}$$

Check Minimum Bar Spacing in Section 5.10.3.1.2:

$$s_{min} := \max\left(diam_{outsidebtm}, 1.33 Aggregate_{diam}, 1in\right)$$ $$\boxed{s_{min} = 1 \cdot in}$$

Check Minimum Bar Spacing in Section 5.10.3.2:

$$s_{max2} := \min\left(1.5 \cdot t_{btm}, 18in\right)$$ $$\boxed{s_{max2} = 15 \cdot in}$$

$$CheckSpacing_{Outsidebtm} := \begin{cases} \text{"OK"} & \text{if } s_{min} \le s_{outsidebtm} \le \min(s_{max1}, s_{max2}) \\ \text{"NG"} & \text{otherwise} \end{cases} = \text{"OK"}$$

Check Deflection Control (AASHTO 2.5.2.6.2):

Not Applicable to this Design Section

Strength Limit State

Flexural Resistance in Section 5.7.3.2

$Mu_{outsidebtm} := 13.314 kip \cdot ft$ Load Case #3

$Nu_{outsidebtm} := -4.671 kip$ Min value at the same section & LC as $Mu_{outsidebtm}$
+ if tensile, - if compressive

$Vu_{outsidebtm} := 1.106 kip$ Max value at the same section & LC as $Mu_{outsidebtm}$

Verify that f_y can e substituted for f_s in the equations of 5.7.3.2. This is allowed when $\frac{c}{d_s} \le 0.60$.

$$c := \frac{As_{outsidebtm} \cdot f_y}{0.85 \cdot f_c \cdot \beta_1 \cdot b_w} \qquad c = 1.114 \cdot in$$

Simplified equation 5.7.3.1.2-4

$$\frac{c}{d_{outsidebtm}} = 0.146$$

This is less than 0.60 therefore f_y can be substituted for f_s

$$a_{outsidebtm} := \beta_1 \cdot c \qquad a_{outsidebtm} = 0.891 \cdot in$$

$$Mn_{outsidebtm} := As_{outsidebtm} \cdot f_y \cdot \left(d_{outsidebtm} - \frac{a_{outsidebtm}}{2} \right)$$

$$Mr_{outsidebtm} := \phi_{moment} \cdot Mn_{outsidebtm}$$

$$Mr_{outsidebtm} = 24.468 \cdot kip \cdot ft$$

$Mu_{outsidebtm} = 13.314 \cdot kip \cdot ft$

$$CheckMoment_{Outsidebtm} := \begin{cases} \text{"OK"} & \text{if } Mu_{outsidebtm} < Mr_{outsidebtm} \\ \text{"NG"} & \text{otherwise} \end{cases} = \text{"OK"}$$

Minimum Reinforcement in Section 5.7.3.3.2

$f_r := 0.24 \cdot \sqrt{f_c \cdot ksi}$ $\quad f_r = 0.537 \cdot ksi$ 5.4.2.6

$I_{g_btm} := \frac{b_w \cdot t_{btm}^3}{12}$ $\quad I_{g_btm} = 1000 \cdot in^4$

$y_{t_btm} := \frac{t_{btm}}{2}$ $\quad y_{t_btm} = 5 \cdot in$

$S_{c_btm} := \frac{I_{g_btm}}{y_{t_btm}} = 200 \cdot in^3$

$\gamma_1 := 1.2$ For precast members

$\gamma_3 := 0.67$ 0.67 for deformed bar

$M_{cr_btm} := \gamma_3 \cdot \gamma_1 \cdot f_r \cdot S_{c_btm}$ $\quad \boxed{M_{cr_btm} = 7.191 \cdot kip \cdot ft}$ 5.7.3.3.2

$\boxed{1.33 \cdot Mu_{outsidebtm} = 17.708 \cdot kip \cdot ft}$

The factored resistance shall be at least equal to the lesser of the above two values.

$$CheckMin_{Outbtm1} := \begin{cases} \text{"OK"} & \text{if } Mr_{outsidebtm} \geq \min(M_{cr_btm}, 1.33 \cdot Mu_{outsidebtm}) \\ \text{"NG"} & \text{otherwise} \end{cases} = \text{"OK"}$$

Minimum Reinforcement in Section 12.11.4.3.2

$\rho_{outsidebtm} := \frac{As_{outsidebtm}}{t_{btm} \cdot b_w}$ $\quad \boxed{\rho_{outsidebtm} = 0.006}$

$\boxed{\rho_{min} := .002}$

$$CheckMinRein_{Outsidebtm2} := \begin{cases} \text{"OK"} & \text{if } \rho_{outsidebtm} \geq \rho_{min} \\ \text{"NG"} & \text{otherwise} \end{cases} = \text{"OK"}$$

Check Inside Btm Slab Moment (Design Section 5M):
Service Limit State

Check Crack Control in Section 5.7.3.4

$Ms_{insidebtm} := 7.689kip \cdot ft$ Load Case #4

$Ns_{insidebtm} := -3.965kip$ Min value at same section as Ms

Rebar Layout: $bar_{insidebtm} := 5$ $s_{insidebtm} := 9in$

$$diam_{insidebtm} := \frac{bar_{insidebtm}}{8} in \qquad diam_{insidebtm} = 0.625 \cdot in$$

$$As_{insidebtm} := \frac{\pi \cdot diam_{insidebtm}^2}{4} \cdot 12 \frac{in}{s_{insidebtm}} \qquad As_{insidebtm} = 0.41 \cdot in^2$$

$$d_{insidebtm} := t_{btm} - cover - \frac{diam_{insidebtm}}{2} \qquad d_{insidebtm} = 7.688 \cdot in$$

Stress in reinforcement calculated per MacGregor
"Reinforced Concrete Mechanics and Design" 4th Ed, Section 9-2

$$\eta := \frac{E_s}{E_c} = 7.118$$

$$\rho_{insidebtm} := \frac{As_{insidebtm}}{b_w \cdot d_{insidebtm}} = 0.004$$

$$k := \sqrt{2\rho_{insidebtm} + (\rho_{insidebtm} \cdot \eta)^2} - \rho_{insidebtm} \cdot \eta$$

$$j_{insidebtm} := 1 - \frac{k}{3} = 0.977$$

$$fss_{insidebtm} := \frac{Ms_{insidebtm} + Ns_{insidebtm} \cdot \left(d_{insidebtm} - \frac{t_{btm}}{2}\right)}{As_{insidebtm} \cdot j_{insidebtm} \cdot d_{insidebtm}} = 26.552 \cdot ksi$$

Stress in Reinforcement at Service Limit State

$d_{c_insidebtm} := t_{btm} - d_{insidebtm} = 2.313 \cdot in$

$\beta_s := 1 + \frac{d_{c_insidebtm}}{0.7 \cdot (t_{btm} - d_{c_insidebtm})}$ $\beta_s = 1.43$

$\gamma_e := 1.00$ exposure factor

$s_{max1} := \frac{700 \frac{kip}{in} \cdot \gamma_e}{\beta_s \cdot fss_{insidebtm}} - 2 \cdot d_{c_insidebtm}$ $s_{max1} = 13.814 \cdot in$

Check Minimum Bar Spacing in Section 5.10.3.1.2:

$s_{min} := \max(diam_{insidebtm}, 1.33 Aggregate_{diam}, 1in)$ $s_{min} = 1 \cdot in$

Check Minimum Bar Spacing in Section 5.10.3.2:

$s_{max2} := \min(1.5 \cdot t_{btm}, 18in)$ $s_{max2} = 15 \cdot in$

$$CheckSpacing_{Insidebtm} := \begin{cases} \text{"OK"} & \text{if } s_{min} \le s_{insidebtm} \le \min(s_{max1}, s_{max2}) \\ \text{"NG"} & \text{otherwise} \end{cases} = \text{"OK"}$$

Check Deflection Control (AASHTO 2.5.2.6.2):

Not Applicable to this Design Section

Strength Limit State

Flexural Resistance in Section 5.7.3.2

$Mu_{insidebtm} := 9.899 kip \cdot ft$ Load Case #4

$Nu_{insidebtm} := -5.901 kip$ Min value at the same section & LC as $Mu_{insidebtm}$
+ if tensile, - if compressive

$Vu_{insidebtm} := 0.212kip$ Max value at the same section & LC as $Mu_{insidebtm}$

Verify that f_y can be substituted for f_s in the equations of 5.7.3.2. This is allowed when $\frac{c}{d_s} \le 0.60$.

$c := \frac{As_{insidebtm} \cdot f_y}{0.85 \cdot f_c \cdot \beta_1 \cdot b_w}$ $c = 0.602 \cdot in$ Simplified equation 5.7.3.1.2-4

$\frac{c}{d_{insidebtm}} = 0.078$ **This is less than 0.60 therefore f_y can be substituted for f_s**

$a_{insidebtm} := \beta_1 \cdot c$ $a_{insidebtm} = 0.481 \cdot in$

$Mn_{insidebtm} := As_{insidebtm} \cdot f_y \cdot \left(d_{insidebtm} - \frac{a_{insidebtm}}{2} \right)$

$Mr_{insidebtm} := \phi_{moment} \cdot Mn_{insidebtm}$

$Mr_{insidebtm} = 13.708 \cdot kip \cdot ft$

$Mu_{insidebtm} = 9.899 \cdot kip \cdot ft$

$$CheckMoment_{Insidebtm} := \begin{cases} "OK" & \text{if } Mu_{insidebtm} < Mr_{insidebtm} \\ "NG" & \text{otherwise} \end{cases} = "OK"$$

Minimum Reinforcement in Section 5.7.3.3.2

$f_r := 0.24 \cdot \sqrt{f_c \cdot ksi}$ $f_r = 0.537 \cdot ksi$ 5.4.2.6

$I_{g_btm} := \frac{b_w \cdot t_{btm}^3}{12}$ $I_{g_btm} = 1000 \cdot in^4$

$y_{t_btm} := \frac{t_{btm}}{2}$ $y_{t_btm} = 5 \cdot in$

$S_{c_btm} := \frac{I_{g_btm}}{y_{t_btm}} = 200 \cdot in^3$

$\gamma_1 := 1.2$ For precast members

$\gamma_3 := 0.67$ 0.67 for deformed bar

$M_{cr_leg} := \gamma_3 \cdot \gamma_1 \cdot f_r \cdot S_{c_leg}$ $M_{cr_btm} = 7.191 \cdot kip \cdot ft$ 5.7.3.3.2

$1.33 \cdot Mu_{insidebtm} = 13.166 \cdot kip \cdot ft$

The factored resistance shall be at least equal to the lesser of the above two values.

$$CheckMin_{Insidebtm1} := \begin{cases} \text{"OK"} & \text{if } Mr_{insidebtm} \geq \min(M_{cr_btm}, 1.33 \cdot Mu_{insidebtm}) \\ \text{"NG"} & \text{otherwise} \end{cases} = \text{"OK"}$$

Minimum Reinforcement in Section 12.11.4.3.2

$$\rho_{insidebtm} := \frac{As_{insidebtm}}{t_{btm} \cdot b_w}$$ $\rho_{insidebtm} = 0.003$

$\rho_{min} := .002$

$$CheckMinRein_{Insidebtm2} := \begin{cases} \text{"OK"} & \text{if } \rho_{insidebtm} \geq \rho_{min} \\ \text{"NG"} & \text{otherwise} \end{cases} = \text{"OK"}$$

Check Btm Slab Shear (Design Section 6S): Strength Limit State

$$d_{v_btm} := \min\left(\frac{Mn_{insidebtm}}{As_{insidebtm} \cdot f_y}, \frac{Mn_{outsidebtm}}{As_{outsidebtm} \cdot f_y}\right)$$ C5.8.2.9-1

$d_{v_btm} = 7.18 \cdot in$ Conservatively taking the smallest value for the btm.

$Vu_{btm} := 12.708kip$ Load Case #6

$Mu_{btm_RISA} := 9.572kip \cdot ft$ Max value at the same section & LC as Vu_{btm}

$Nu_{btm} := -9.334kip$ Min value at the same section & LC as Vu_{btm}
+ if tensile, - if compressive

Note: This is a conservative approach, since we are taking the worse values for each of

shear, moment, and axial.

Determine Shear Resistance Section 5.8.3.4.2

The section contains less than the minimum transverse reinforcement specified in 5.8.2.5, therefore use equation 5.8.3.4.2-2 to determine the longitudinal strain (ξ_x) at the location of maximum shear.

$Mu_{btm} := \max(Mu_{btm_RISA}, Vu_{btm} \cdot d_{v_btm})$ $\qquad Mu_{btm} = 9.572 \cdot kip \cdot ft$

In the eqtn below Mu shall not be less than $Vu \cdot d_v$

$$\xi_{sbtm} := \frac{\frac{|Mu_{btm}|}{d_{v_btm}} + 0.5Nu_{btm} + |Vu_{btm}|}{E_s \cdot As_{outsidebtm}} \qquad (5.8.3.4.2\text{-}4) \qquad 1000 \cdot \xi_{sbtm} = 1.09$$

$s_{x_btm} := d_{v_btm}$

$$s_{xe_btm} := s_{x_btm} \cdot \frac{1.38in}{Aggregate_{diam} + 0.63in} = 7.18 \cdot in \qquad (5.8.3.4.2\text{-}5)$$

$$\beta_{btm} := \left(\frac{4.8}{1 + 750 \cdot \xi_{sbtm}}\right) \cdot \left(\frac{51}{39 + \frac{s_{xe_btm}}{1in}}\right) = 2.911 \qquad (5.8.3.4.2\text{-}2)$$

$$\Theta_{btm} := 29deg + 3500deg \cdot \xi_{sbtm} = 32.831 \cdot deg \qquad (5.8.3.4.2\text{-}3)$$

$$Vn_{btm} := \min\left(0.25 \cdot f_c \cdot b_w \cdot d_{v_btm}, 0.0316 \cdot \beta_{btm} \cdot \sqrt{f_c \cdot ksi} \cdot b_w \cdot d_{v_btm}\right) = 17.722 \cdot kip$$

$$\boxed{Vr_{btm} := \phi_{shear} \cdot Vn_{btm} = 15.95 \cdot kip}$$

$Vu_{btm} = 12.708 \cdot kip$

$$Check_{Vr} := \begin{cases} \text{"OK"} & \text{if } Vr_{btm} \geq Vu_{btm} \\ \text{"NG"} & \text{otherwise} \end{cases} = \text{"OK"}$$

Note: Per 5.8.2.4 Slabs, Footings, and Culverts are exempt from requiring transverse steel when $Vu > 0.5\phi Vc$.

Check Longitudinal Reinforcement per Section 5.8.3.5

Need to check each section investigated. Section 4M, 5M, & 6S.

Section 4M:

$Mu_{outsidebtm} = 13.314 \cdot kip \cdot ft$ Restated from above

$Nu_{outsidebtm} = -4.671 \cdot kip$ Restated from above

$Vu_{outsidebtm} = 1.106 \cdot kip$ Restated from above

$As_{outsidebtm} \cdot f_y = 45.441 \cdot kip$ Equation 5.8.3.5-1

$$long_{4M} := \frac{\left|Mu_{outsidebtm}\right|}{d_{v_btm} \cdot \phi_{moment}} + 0.5 \cdot \frac{Nu_{outsidebtm}}{\phi_{axial}} + \left|\frac{Vu_{outsidebtm}}{\phi_{shear}}\right| \cdot \cot\left(\Theta_{btm}\right) = 24.036 \cdot kip$$

$$Check_{long4M} := \begin{cases} \text{"OK"} & \text{if } As_{outsidebtm} \cdot f_y \geq long_{4M} \\ \text{"NG"} & \text{otherwise} \end{cases} = \text{"OK"}$$

Section 5M:

$Mu_{insidebtm} = 9.899 \cdot kip \cdot ft$ Restated from above

$Nu_{insidebtm} = -5.901 \times 10^3\ lbf$ Restated from above

$Vu_{insidebtm} = 0.212 \cdot kip$ Restated from above

$As_{insidebtm} \cdot f_y = 24.544 \cdot kip$

Equation 5.8.3.5-1

$$long_{5M} := \frac{\left|Mu_{insidebtm}\right|}{d_{v_btm} \cdot \phi_{moment}} + 0.5 \cdot \frac{Nu_{insidebtm}}{\phi_{axial}} + \left|\frac{Vu_{insidebtm}}{\phi_{shear}}\right| \cdot \cot\left(\Theta_{btm}\right) = 15.471 \cdot kip$$

$$Check_{long5M} := \begin{cases} \text{"OK"} & \text{if } As_{insidebtm} \cdot f_y \geq long_{5M} \\ \text{"NG"} & \text{otherwise} \end{cases} = \text{"OK"}$$

Section 6S:

$Mu_{btm} = 9.572 \cdot kip \cdot ft$ Restated from above

$Nu_{btm} = -9.334 \cdot kip$ Restated from above

$Vu_{btm} = 12.708 \cdot kip$ Restated from Above

This design section is in the negative moment area near the knee so use outside btm reinforcing information.

$As_{outsidebtm} \cdot f_y = 45.441 \cdot kip$

Equation 5.8.3.5-1

$$long_{6S} := \frac{|Mu_{btm}|}{d_{v_btm} \cdot \phi_{moment}} + 0.5 \cdot \frac{Nu_{btm}}{\phi_{axial}} + \left| \frac{Vu_{btm}}{\phi_{shear}} \right| \cdot \cot(\Theta_{btm}) = 34.475 \cdot kip$$

$$Check_{long6S} := \begin{cases} \text{"OK"} & \text{if } As_{outsidebtm} \cdot f_y \geq long_{6S} \\ \text{"NG"} & \text{otherwise} \end{cases} = \text{"OK"}$$

Check Inside Deck Moment (Design Section 7M):

Service Limit State

Check Crack Control in Section 5.7.3.4

$Ms_{insidedeck} := 40.75 kip \cdot ft$ Load Case #4

$Ns_{insidedeck} := -0.539 kip$ Min value at same section as Ms

Rebar Layout: $bar_{insidedeck} := 9$ $s_{insidedeck} := 6in$

$$diam_{insidedeck} := \frac{bar_{insidedeck}}{8} in \qquad diam_{insidedeck} = 1.125 \cdot in$$

$$As_{insidedeck} := \frac{\pi \cdot diam_{insidedeck}^2}{4} \cdot 12 \frac{in}{s_{insidedeck}} \qquad As_{insidedeck} = 1.99 \cdot in^2$$

$$d_{insidedeck} := t_{deck} - cover_{insidedeck} - \frac{diam_{insidedeck}}{2} \qquad d_{insidedeck} = 7.438 \cdot in$$

Stress in reinforcement calculated per MacGregor
"Reinforced Concrete Mechanics and Design" 4th Ed, Section 9-2

$$\eta := \frac{E_s}{E_c} = 7.118$$

$$\rho_{insidedeck} := \frac{As_{insidedeck}}{b_w \cdot d_{insidedeck}} = 0.022$$

$$k := \sqrt{2\rho_{insidedeck} + \left(\rho_{insidedeck} \cdot \eta\right)^2} - \rho_{insidedeck} \cdot \eta$$

$$j_{insidedeck} := 1 - \frac{k}{3} = 0.965$$

$$fss_{insidedeck} := \frac{Ms_{insidedeck} + Ns_{insidedeck} \cdot \left(d_{insidedeck} - \frac{t_{deck}}{2}\right)}{As_{insidedeck} \cdot j_{insidedeck} \cdot d_{insidedeck}} = 34.184 \cdot ksi$$

Stress in Reinforcement at Service Limit State

$$d_{c_insidedeck} := t_{deck} - d_{insidedeck} \qquad d_{c_insidedeck} = 2.563 \cdot in$$

$$\beta_s := 1 + \frac{d_{c_insidedeck}}{0.7 \cdot \left(t_{deck} - d_{c_insidedeck}\right)} \qquad \beta_s = 1.492$$

$$\gamma_e := 1.00$$ exposure factor

$$s_{max1} := \frac{700 \frac{kip}{in} \cdot \gamma_e}{\beta_s \cdot fss_{insidedeck}} - 2 \cdot d_{c_insidedeck} \qquad \boxed{s_{max1} = 8.598 \cdot in}$$

Check Minimum Bar Spacing in Section 5.10.3.1.2:

$s_{min} := \max(diam_{insidedeck}, 1.33Aggregate_{diam}, 1in)$ $\boxed{s_{min} = 1.125 \cdot in}$

Check Minimum Bar Spacing in Section 5.10.3.2:

$s_{max2} := \min(1.5 \cdot t_{deck}, 18in)$ $\boxed{s_{max2} = 15 \cdot in}$

$$CheckSpacing_{InsideDeck} := \begin{cases} \text{"OK"} & \text{if } s_{min} \le s_{insidedeck} \le \min(s_{max1}, s_{max2}) \\ \text{"NG"} & \text{otherwise} \end{cases} = \text{"OK"}$$

Check Deflection Control (AASHTO 2.5.2.6.2):

See Below

Strength Limit State

Flexural Resistance in Section 5.7.3.2

$\boxed{Mu_{insidedeck} := 52.853kip \cdot ft}$ Load Case #4

$\boxed{Nu_{insidedeck} := -1.153kip}$ Min value at the same section & LC as $Mu_{insidedeck}$
+ if tensile, - if compressive

$\boxed{Vu_{insidedeck} := 0kip}$ Max value at the same section & LC as $Mu_{insidedeck}$

Verify that f_y can be substituted for f_s in the equations of 5.7.3.2. This is allowed when $\frac{c}{d_s} \le 0.60$.

$c := \frac{As_{insidedeck} \cdot f_y}{0.85 \cdot f_c \cdot \beta_1 \cdot b_w}$ $c = 2.924 \cdot in$ Simplified equation 5.7.3.1.2-4

$\frac{c}{d_{insidedeck}} = 0.393$ **This is less than 0.60 therefore f_y can be substituted for f_s**

$a_{insidedeck} := \beta_1 \cdot c$ $a_{insidedeck} = 2.339 \cdot in$

$$Mn_{insidedeck} := As_{insidedeck} \cdot f_y \cdot \left(d_{insidedeck} - \frac{a_{insidedeck}}{2} \right)$$

$$Mr_{insidedeck} := \phi_{moment} \cdot Mn_{insidedeck}$$

$$\boxed{Mr_{insidedeck} = 56.075 \cdot kip \cdot ft}$$

$$Mu_{insidedeck} = 52.853 \cdot kip \cdot ft$$

$$CheckMoment_{Insidedeck} := \begin{cases} \text{"OK"} & \text{if } Mu_{insidedeck} < Mr_{insidedeck} \\ \text{"NG"} & \text{otherwise} \end{cases} = \text{"OK"}$$

Minimum Reinforcement in Section 5.7.3.3.2

$f_r := 0.24 \cdot \sqrt{f_c \cdot ksi}$ $\qquad f_r = 0.537 \cdot ksi$ $\qquad$ 5.4.2.6

$$I_{g_deck} := \frac{b_w \cdot t_{deck}^3}{12} \qquad I_{g_deck} = 1000 \cdot in^4$$

$$y_{t_deck} := \frac{t_{deck}}{2} \qquad y_{t_deck} = 5 \cdot in$$

$$S_{c_deck} := \frac{I_{g_deck}}{y_{t_deck}} = 200 \cdot in^3$$

$\gamma_1 := 1.2$ $\qquad$ For precast members

$\gamma_3 := 0.67$ $\qquad$ 0.67 for deformed bar

$M_{cr_deck} := \gamma_3 \cdot \gamma_1 \cdot f_r \cdot S_{c_deck}$ $\qquad \boxed{M_{cr_deck} = 7.191 \cdot kip \cdot ft}$ $\qquad$ 5.7.3.3.2

$$\boxed{1.33 \cdot Mu_{insidedeck} = 70.294 \cdot kip \cdot ft}$$

The factored resistance shall be at least equal to the lesser of the above two values.

$$CheckMin_{Insidedeck1} := \begin{cases} \text{"OK"} & \text{if } Mr_{insidedeck} \geq \min\left(M_{cr_deck}, 1.33 \cdot Mu_{insidedeck}\right) \\ \text{"NG"} & \text{otherwise} \end{cases} = \text{"OK"}$$

Minimum Reinforcement in Section 12.11.4.3.2

$$\rho_{insidedeck} := \frac{As_{insidedeck}}{t_{deck} \cdot b_w}$$ $\rho_{insidedeck} = 0.017$

$\rho_{min} := .002$

$$CheckMinRein_{Insidedeck2} := \begin{cases} "OK" & \text{if } \rho_{insidedeck} \geq \rho_{min} \\ "NG" & \text{otherwise} \end{cases} = "OK"$$

Check Deck Shear (Design Section 8S):

Strength Limit State

$$d_{v_deck} := \frac{Mn_{insidedeck}}{As_{insidedeck} \cdot f_y} = 6.268 \cdot in$$ C5.8.2.9-1

$Vu_{deck} := 13.909kip$ Load Case #4

$Mu_{deck_RISA} := 16.15kip \cdot ft$ Max value at the same section & LC as Vu_{deck}

$Nu_{deck} := -1.153kip$ Min value at the same section & LC as Vu_{deck}

+ if tensile, - if compressive

Note: This is a conservative approach, since we are taking the worse values for each of shear, moment, and axial.

Determine Shear Resistance Section 5.8.3.4.2

The section contains less than the minimum transverse reinforcement specified in 5.8.2.5, therefore use equation 5.8.3.4.2-2 to determine the longitudinal strain (ξ_x) at the location of maximum shear.

$$Mu_{deck} := \max(Mu_{deck_RISA}, Vu_{deck} \cdot d_{v_deck})$$ $Mu_{deck} = 16.15 \cdot kip \cdot ft$

In the eqtn below Mu shall not be less than $Vu \cdot d_v$

$$\xi_{sdeck} := \frac{\frac{|Mu_{deck}|}{d_{v_deck}} + 0.5Nu_{deck} + |Vu_{deck}|}{E_s \cdot As_{insidedeck}}$$ (5.8.3.4.2-4) $1000 \cdot \xi_{sdeck} = 0.77$

$s_{x_deck} := d_{v_deck} = 6.268 \cdot in$

$$s_{xe_deck} := s_{x_deck} \cdot \frac{1.38in}{Aggregate_{diam} + 0.63in} = 6.268 \cdot in$$ (5.8.3.4.2-5)

$$\beta_{deck} := \left(\frac{4.8}{1 + 750 \cdot \xi_{sdeck}}\right) \cdot \left(\frac{51}{39 + \frac{s_{xe_deck}}{1in}}\right) = 3.432$$ (5.8.3.4.2-2)

$$\Theta_{deck} := 29deg + 3500deg \cdot \xi_{sdeck} = 31.686 \cdot deg$$ (5.8.3.4.2-3)

$$Vn_{deck} := \min\left(0.25 \cdot f_c \cdot b_w \cdot d_{v_deck}, 0.0316 \cdot \beta_{deck} \cdot \sqrt{f_c \cdot ksi} \cdot b_w \cdot d_{v_deck}\right) = 18.241 \cdot kip$$

$$\boxed{Vr_{deck} := \phi_{shear} \cdot Vn_{deck} = 16.417 \cdot kip}$$

$Vu_{deck} = 13.909 \cdot kip$

$$Check_{Vr} := \begin{cases} \text{"OK"} & \text{if } Vr_{deck} \geq Vu_{deck} \\ \text{"NG"} & \text{otherwise} \end{cases} = \text{"OK"}$$

Note: Per 5.8.2.4 Slabs, Footings, and Culverts are exempt from requiring transverse steel when $Vu > 0.5\phi Vc$.

Check Longitudinal Reinforcement per Section 5.8.3.5

Need to check each section investigated. Section 7M & 8S.

Section 7M:

$Mu_{insidedeck} = 52.853 \cdot kip \cdot ft$ Restated from above

$Nu_{insidedeck} = -1.153 \cdot kip$ Restated from above

$Vu_{insidedeck} = 0 \cdot kip$ Restated from above

$As_{insidedeck} \cdot f_y = 119.282 \cdot kip$

Equation 5.8.3.5-1

$$long_{7M} := \frac{\left|Mu_{insidedeck}\right|}{d_{v_deck} \cdot \phi_{moment}} + 0.5 \cdot \frac{Nu_{insidedeck}}{\phi_{axial}} + \left|\frac{Vu_{insidedeck}}{\phi_{shear}}\right| \cdot \cot\left(\Theta_{deck}\right) = 111.788 \cdot kip$$

$$Check_{long7M} := \begin{cases} \text{"OK"} & \text{if } As_{insidedeck} \cdot f_y \geq long_{7M} \\ \text{"NG"} & \text{otherwise} \end{cases} = \text{"OK"}$$

Section 8S:

$Mu_{deck} = 16.15 \cdot kip \cdot ft$ Restated from above

$Nu_{deck} = -1.153 \cdot kip$ Restated from above

$Vu_{deck} = 13.909 \cdot kip$ Restated from Above

$0.20ksi \cdot f_y = 8.006 \times 10^9 \frac{lb}{ft^3 \cdot s^2} \cdot kip$

Equation 5.8.3.5-1

$$long_{8S} := \frac{\left|Mu_{deck}\right|}{d_{v_deck} \cdot \phi_{moment}} + 0.5 \cdot \frac{Nu_{deck}}{\phi_{axial}} + \left|\frac{Vu_{deck}}{\phi_{shear}}\right| \cdot \cot\left(\Theta_{deck}\right) = 58.75 \cdot kip$$

$$Check_{long8S} := \begin{cases} \text{"OK"} & \text{if } As_{insidedeck} \cdot f_y \geq long_{8S} \\ \text{"NG"} & \text{otherwise} \end{cases} = \text{"OK"}$$

Check Distribution Reinforcement (AASHTO 9.7.3.2):

Not applicable for soil depths greater than 2ft

Check Deflection Control (AASHTO 2.5.2.6.2, & 5.7.3.6.2):

No live load. therefore live load deflection is 0.

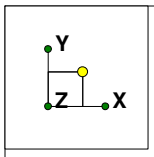

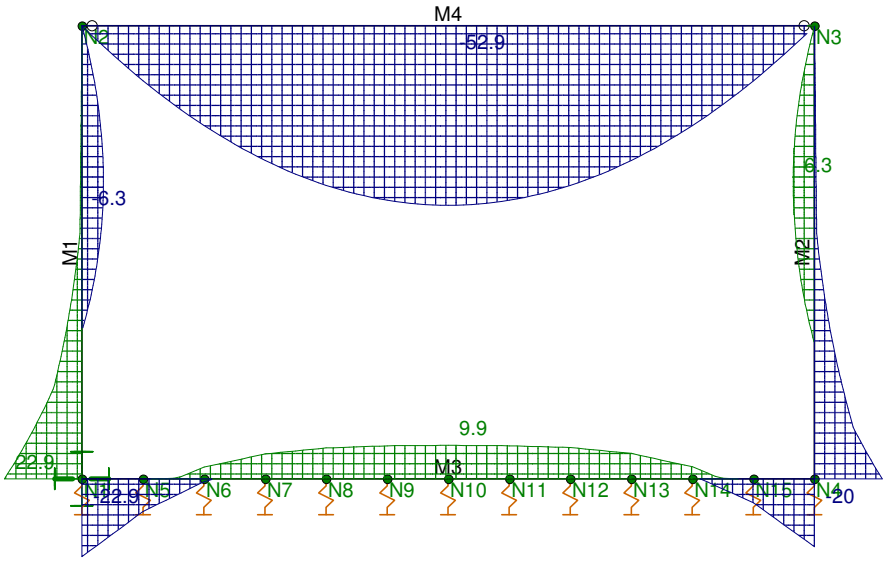

Solution: Envelope
Member z Bending Moments (k-ft)

Renaud		SK - 1
P Lefebvre	12x7 BCwTS - BR47 - In Service Phase - Factored Loads	Feb 25, 2015 at 2:51 PM
5778	Moment Envelope	12x7 box top_LRFD BR47 Renaud...

Delta 2015.059.012 Chk: RJA

Concrete Properties

	Label	E [ksi]	G [ksi]	Nu	Therm (\1E...	Density[k/ft...	f'c[ksi]	Lambda	Flex Steel[...	Shear Stee...
1	Conc3000NW	3156	1372	.15	.6	.145	3	1	60	60
2	Conc3500NW	3409	1482	.15	.6	.145	3.5	1	60	60
3	Conc4000NW	3644	1584	.15	.6	.145	4	1	60	60
4	Conc5000NW	4074		.15	.6	.145	5	1	60	60
5	Conc3000LW	2085	907	.15	.6	.11	3	.75	60	60
6	Conc3500LW	2252	979	.15	.6	.11	3.5	.75	60	60
7	Conc4000LW	2408	1047	.15	.6	.11	4	.75	60	60

Concrete Section Sets

	Label	Shape	Type	Design List	Material	Design Rules	A [in2]	Iyy [in4]	Izz [in4]	J [in4]
1	LEG	CRECT8X12	Column	Rectangular...	Conc5000NW	Typical	96	1152	512	1187.84
2	DECK	CRECT10X12	Beam	Rectangular...	Conc5000NW	Typical	120	1440	1000	1900
3	BOTTOM	CRECT10X12	Beam	Rectangular...	Conc5000NW	Typical	120	1440	1000	1900

Joint Coordinates and Temperatures

	Label	X [in]	Y [in]	Z [in]	Temp [F]	Detach From Diap...
1	N1	0	0	0	0	
2	N2	0	94	0	0	
3	N3	152	94	0	0	
4	N4	152	0	0	0	
5	N5	12.666667	0	0	0	
6	N6	25.333333	0	0	0	
7	N7	38	0	0	0	
8	N8	50.666667	0	0	0	
9	N9	63.333333	0	0	0	
10	N10	76	0	0	0	
11	N11	88.666667	0	0	0	
12	N12	101.333333	0	0	0	
13	N13	114	0	0	0	
14	N14	126.666667	0	0	0	
15	N15	139.333333	0	0	0	

Joint Boundary Conditions

	Joint Label	X [k/in]	Y [k/in]	Z [k/in]	X Rot.[k-ft/rad]	Y Rot.[k-ft/rad]	Z Rot.[k-ft/rad]	Footing
1	N1	Reaction	CS30.4	Reaction	Reaction	Reaction		
2	N2							
3	N3							
4	N4		CS30.4					
5	N5		CS30.4					
6	N6		CS30.4					
7	N7		CS30.4					
8	N8		CS30.4					
9	N9		CS30.4					
10	N10		CS30.4					
11	N11		CS30.4					
12	N12		CS30.4					
13	N13		CS30.4					
14	N14		CS30.4					
15	N15		CS30.4					

Member Primary Data

	Label	I Joint	J Joint	K Joint	Rotate(d...	Section/Sha...	Type	Design List	Material	Design Ru...
1	M1	N2	N1			LEG	Column	Rectangular_MM	Conc500...	Typical
2	M2	N3	N4			LEG	Column	Rectangular_MM	Conc500...	Typical
3	M3	N1	N4			BOTTOM	Beam	Rectangular_MM	Conc500...	Typical
4	M4	N2	N3			DECK	Beam	Rectangular_MM	Conc500...	Typical

Member Advanced Data

	Label	I Release	J Release	I Offset[in]	J Offset[in]	T/C Only	Physical	TOM	Inactive	Seismic Design...
1	M1						Yes			None
2	M2						Yes			None
3	M3						Yes			None
4	M4	BenPIN	BenPIN				Yes			None

Basic Load Cases

	BLC Description	Category	X Gra...	Y Gra...	Z Gra...	Joint	Point	Distri...	Area(Member)	Surface(Plate/...
1	DEAD LOAD	DL		-1						
2	EP LEFT LEG	EPL						1		
3	EP RIGHT LEG	EPL						1		
4	OVERBURDEN SOIL LEG	EPL						2		
5	OVERBURDEN SOIL DECK	LL						1		
6	SUR LEFT LEG	LL						1		
7	SUR RIGHT LEG	LL						1		

Member Distributed Loads (BLC 2 : EP LEFT LEG)

	Member Label	Direction	Start Magnitude[k/ft,F]	End Magnitude[k/ft...	Start Location[in,%]	End Location[in,%]
1	M1	X	0	.508	0	0

Member Distributed Loads (BLC 3 : EP RIGHT LEG)

	Member Label	Direction	Start Magnitude[k/ft,F]	End Magnitude[k/ft...	Start Location[in,%]	End Location[in,%]
1	M2	X	0	-.508	0	0

Member Distributed Loads (BLC 4 : OVERBURDEN SOIL LEG)

	Member Label	Direction	Start Magnitude[k/ft,F]	End Magnitude[k/ft...	Start Location[in,%]	End Location[in,%]
1	M1	X	.896	.896	0	0
2	M2	X	-.896	-.896	0	0

Member Distributed Loads (BLC 5 : OVERBURDEN SOIL DECK)

	Member Label	Direction	Start Magnitude[k/ft,F]	End Magnitude[k/ft...	Start Location[in,%]	End Location[in,%]
1	M4	Y	-1.911	-1.911	0	0

Member Distributed Loads (BLC 6 : SUR LEFT LEG)

	Member Label	Direction	Start Magnitude[k/ft,F]	End Magnitude[k/ft...	Start Location[in,%]	End Location[in,%]
1	M1	X	.123	.123	0	0

Member Distributed Loads (BLC 7 : SUR RIGHT LEG)

	Member Label	Direction	Start Magnitude[k/ft,F]	End Magnitude[k/ft...	Start Location[in,%]	End Location[in,%]
1	M2	X	-.123	-.123	0	0

Moving Loads

Tag	Pattern	Increment[in]	Bot...	1st J...	2nd J...	3rd J...	4th J...	5th J...	6th J...	7th J...	8th J...	9th J...	10th ...
No Data to Print ...													

MICHIE CORPORATION
173 BUXTON INDUSTRIAL DRIVE; PO BOX 870
HENNIKER, NH 03242
PHONE: 603-428-3218
FAX: 603-428-7426

Re.:

REINFORCING SUMMARY

Customer: RENAUD
Project: WINNALL VAOT STP CULVERT
Location: -BR 47-
Project #: 5779
Description: 12x7 BCWTS
Proj. Contact:

Date: 2/25/15 | Designed by: PJL | Checked by: | Date Checked:

- NEOPRENE IN HORIZ. JOINT
- TORCH APPLIED MEMBRANE TO EXTEND 6" MIN BELOW HORIZ. JOINT.

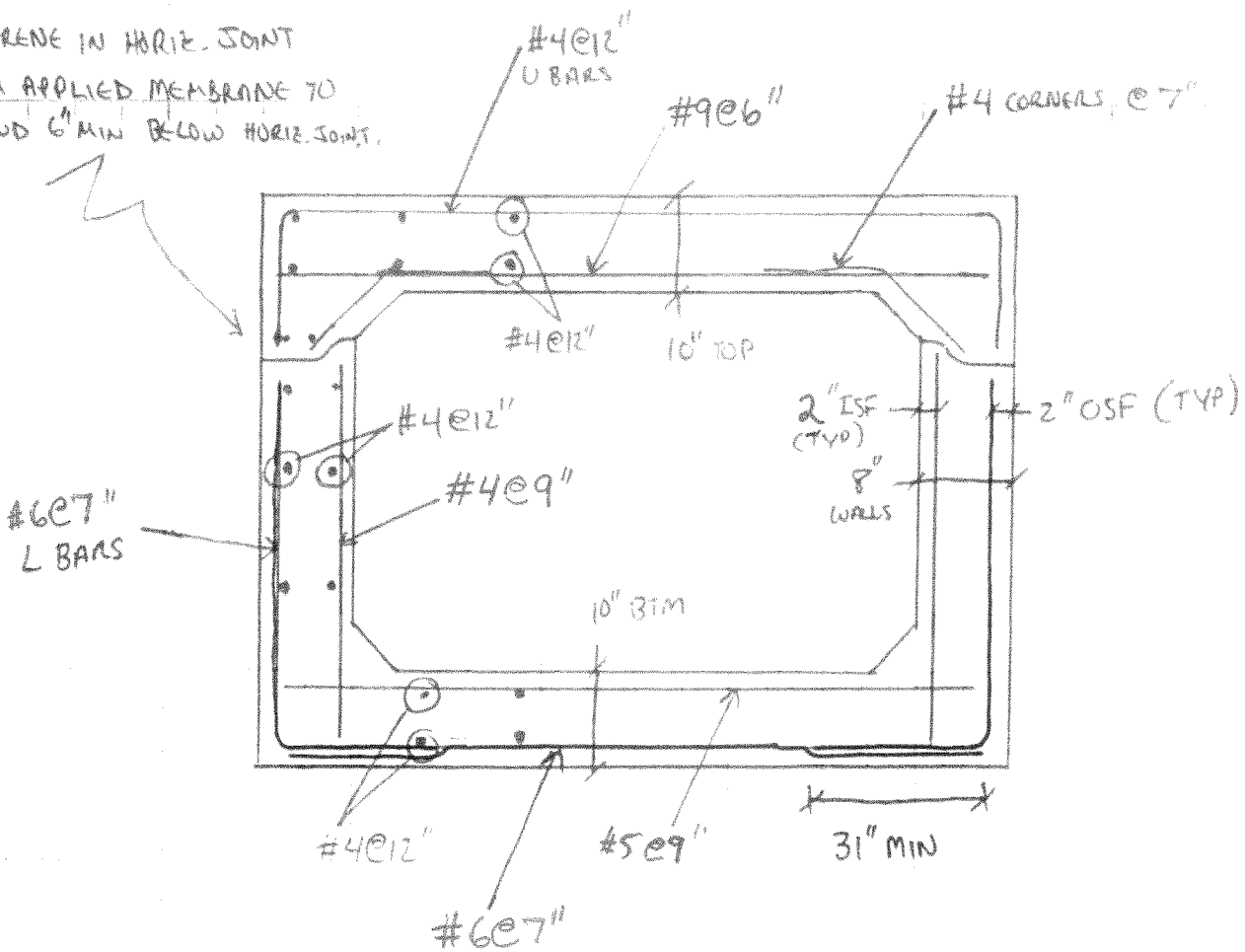

MICHIE CORPORATION
173 BUXTON INDUSTRIAL DRIVE; PO BOX 870
HENNIKER, NH 03242
PHONE: 603-428-3218
FAX: 603-428-7426

Re.:

DESIGN FORCES SUMMARY
(ALL FORCES IN K & K-FT)

Customer: RENAUD
Project: WINHALL VAOT STP CULV(31)
Location: -BR 47-
Project #: 5779
Description: 12X7 BCWTS
Proj. Contact:

Date:	Designed by:	Checked by:	Date Checked:

Page ____ of ____

	LEG OSF (SEC 1-11)	LEG ISF (SEC 1-11)	FLOOR OSF (SEC 2-12)	FLOOR ISF (SEC 2-12)	DECK ISF (SEC 2-12)	DEFLECTION
M_S	7.912 (LC6)	3.613 (LC7)	8.102 (LC3)	7.689 (LC4)	40.75 (LC4)	NO LL N/A
N_S	-13.499	-13.121	-2.953	-3.965	-0.539	
M_U	10.456 (LC6)	6.28 (LC7)	13.314 (LC3)	9.899 (LC4)	52.853 (LC4)	
N_U	-17.479	-17.006	-4.671	-5.901	-1.153	
V_U	8.073	0.148	1.106	0.212	0	
V_U	8.073 (LC6)		12.708 (LC6)		13.909 (LC4)	
$M_{U\text{-}RISA}$	10.456		9.572		16.15	
N_U	-17.479		-9.334		-1.153	

Delta 2015.059.012 Chk: RJA

Load Combinations

	Description	Solve	PDelta	SRSS	B...	Fa...	B...	Fa...	B...	Fa...	B...	Fa...	B...	Fa...	B...	Fa...	B...	Fa...	B...	Fa...
1	DL	Yes			1	1.25														
2	Backfill one leg				1	1.25	2	1.5												
3	Backfill two legs + Surcharge two ...				1	1.25	2	1.5	3	1.5	6	1.75	7	1.75						
4	Backfill to FG (Deck Moment)	Yes			1	1.25	2	.9	3	.9	4	.75	5	1.3						
5	Backfill to FG (Knee Moment)	Yes			1	1.25	2	1.5	3	1.5	4	1.5	5	1.3						
6	Backfill to FG + LS left leg only	Yes			1	1.25	2	1.5	3	1.5	4	1.5	5	1.3	6	1.75				
7	Backfill to FG + LS both legs	Yes			1	1.25	2	1.5	3	1.5	4	1.5	5	1.3	6	1.75	7	1.75		

Envelope Member Section Forces

	Member	Sec		Axial[k]	LC	y She...	LC	z Shear[...	LC	Torque[k-ft]	LC	y-y Moment[k-...	LC	z-z Moment[...	LC
1	M1	1	max	16.69	4	4.551	7	0	1	0	1	0	1	0	1
2			min	.957	1	-.172	1	0	1	0	1	0	1	0	1
3		2	max	16.769	4	3.513	7	0	1	0	1	0	1	.112	1
4			min	1.035	1	-.172	1	0	1	0	1	0	1	-2.634	7
5		3	max	16.848	4	2.433	7	0	1	0	1	0	1	.224	1
6			min	1.114	1	-.172	1	0	1	0	1	0	1	-4.577	7
7		4	max	16.927	4	1.311	7	0	1	0	1	0	1	.336	1
8			min	1.193	1	-.275	4	0	1	0	1	0	1	-5.802	7
9		5	max	17.006	4	.148	7	0	1	0	1	0	1	.448	1
10			min	1.272	1	-.8	4	0	1	0	1	0	1	-6.28	7 Mu
11		6	max	17.085	4	-.172	1	0	1	0	1	0	1	.56	1
12			min	1.351	1	-1.429	6	0	1	0	1	0	1	-5.986	7
13		7	max	17.164	4	-.172	1	0	1	0	1	0	1	1.221	4
14			min	1.43	1	-2.675	6	0	1	0	1	0	1	-4.893	7
15		8	max	17.243	4	-.172	1	0	1	0	1	0	1	2.673	4
16			min	1.509	1	-3.962	6	0	1	0	1	0	1	-2.972	7
17		9	max	17.322	4	-.172	1	0	1	0	1	0	1	4.525	4
18			min	1.588	1	-5.291	6	0	1	0	1	0	1	-.198	7
19		10	max	17.4	4	-.172	1	0	1	0	1	0	1	6.794	4
20			min	1.666	1	-6.661	6	0	1	0	1	0	1	1.009	1
21		11	max	17.479	4	-.172	1	0	1	0	1	0	1	10.456	6 Mu
22			min	1.745	1	-8.073	6 Vu	0	1	0	1	0	1	1.121	1
23		12	max	17.558	4	-.172	1	0	1	0	1	0	1	16.198	6
24			min	1.824	1	-9.526	6	0	1	0	1	0	1	1.233	1
25		13	max	17.637	4	-.172	1	0	1	0	1	0	1	22.901	6
26			min	1.903	1	-11.02	6	0	1	0	1	0	1	1.345	1
27	M2	1	max	16.69	7	.172	1	0	1	0	1	0	1	0	1
28			min	.957	1	-4.551	7	0	1	0	1	0	1	0	1
29		2	max	16.769	7	.172	1	0	1	0	1	0	1	2.634	7
30			min	1.035	1	-3.513	7	0	1	0	1	0	1	-.112	1
31		3	max	16.848	7	.172	1	0	1	0	1	0	1	4.577	7
32			min	1.114	1	-2.433	7	0	1	0	1	0	1	-.224	1
33		4	max	16.927	7	.275	4	0	1	0	1	0	1	5.802	7
34			min	1.193	1	-1.36	6	0	1	0	1	0	1	-.336	1
35		5	max	17.006	7	.8	4	0	1	0	1	0	1	6.28	7
36			min	1.272	1	-.337	6	0	1	0	1	0	1	-.448	1
37		6	max	17.085	7	1.351	4	0	1	0	1	0	1	5.986	7
38			min	1.351	1	.172	1	0	1	0	1	0	1	-.56	1
39		7	max	17.164	7	2.302	7	0	1	0	1	0	1	5.082	6
40			min	1.43	1	.172	1	0	1	0	1	0	1	-1.221	4
41		8	max	17.243	7	3.589	7	0	1	0	1	0	1	3.514	6
42			min	1.509	1	.172	1	0	1	0	1	0	1	-2.673	4
43		9	max	17.322	7	4.918	7	0	1	0	1	0	1	1.185	6
44			min	1.588	1	.172	1	0	1	0	1	0	1	-4.525	4
45		10	max	17.4	7	6.288	7	0	1	0	1	0	1	-1.009	1

Envelope Member Section Forces (Continued)

	Member	Sec		Axial[k]	LC	y She...	LC	z Shear[...	LC	Torque[k-ft]	LC	y-y Moment[k-...	LC	z-z Moment[...	LC
46			min	1.666	1	.172	1	0	1	0	1	0	1	-6.794	4
47		11	max	17.479	7	7.7	7	0	1	0	1	0	1	-1.121	1
48			min	1.745	1	.172	1	0	1	0	1	0	1	-9.494	4
49		12	max	17.558	7	9.153	7	0	1	0	1	0	1	-1.233	1
50			min	1.824	1	.172	1	0	1	0	1	0	1	-13.518	7
51		13	max	17.637	7	10.647	7	0	1	0	1	0	1	-1.345	1
52			min	1.903	1	.172	1	0	1	0	1	0	1	-19.978	7
53	M3	1	max	10.647	7	-1.083	1	0	1	0	1	0	1	-1.345	1
54			min	.172	1	-12.548	6	0	1	0	1	0	1	-22.901	6
55		2	max	10.647	7	-1.243	1	0	1	0	1	0	1	-.117	1
56			min	.172	1	-12.708	6	0	1	0	1	0	1	-9.572	6
57		3	max	10.647	7	-.738	1	0	1	0	1	0	1	3.457	4
58			min	.172	1	-8.381	6	0	1	0	1	0	1	-.809	6
59		4	max	10.647	7	-.398	1	0	1	0	1	0	1	7.365	4
60			min	.172	1	-5.073	6	0	1	0	1	0	1	.914	1
61		5	max	10.647	7	-.2	1	0	1	0	1	0	1	9.125	4
62			min	.172	1	-2.834	6	0	1	0	1	0	1	1.04	1
63		6	max	10.647	7	-.108	1	0	1	0	1	0	1	9.759	4
64			min	.172	1	-1.492	6	0	1	0	1	0	1	1.071	1
65		7	max	10.647	7	-.082	1	0	1	0	1	0	1	9.899	4
66			min	.172	1	-.753	6	0	1	0	1	0	1	1.073	1
67		8	max	10.647	7	1.057	7	0	1	0	1	0	1	9.759	4
68			min	.172	1	.108	1	0	1	0	1	0	1	1.071	1
69		9	max	10.647	7	2.344	7	0	1	0	1	0	1	9.267	6
70			min	.172	1	.2	1	0	1	0	1	0	1	1.04	1
71		10	max	10.647	7	4.531	7	0	1	0	1	0	1	7.523	6
72			min	.172	1	.398	1	0	1	0	1	0	1	.914	1
73		11	max	10.647	7	7.846	7	0	1	0	1	0	1	3.558	6
74			min	.172	1	.738	1	0	1	0	1	0	1	.578	1
75		12	max	10.647	7	12.319	7	0	1	0	1	0	1	-.117	1
76			min	.172	1	1.243	1	0	1	0	1	0	1	-7.059	7
77		13	max	10.647	7	12.16	7	0	1	0	1	0	1	-1.345	1
78			min	.172	1	1.083	1	0	1	0	1	0	1	-19.978	7
79	M4	1	max	4.551	7	16.69	4	0	1	0	1	0	1	0	1
80			min	-.172	1	.957	1	0	1	0	1	0	1	0	1
81		2	max	4.551	7	13.909	4	0	1	0	1	0	1	-.926	1
82			min	-.172	1	.797	1	0	1	0	1	0	1	-16.15	4
83		3	max	4.551	7	11.127	4	0	1	0	1	0	1	-1.683	1
84			min	-.172	1	.638	1	0	1	0	1	0	1	-29.363	4
85		4	max	4.551	7	8.345	4	0	1	0	1	0	1	-2.272	1
86			min	-.172	1	.478	1	0	1	0	1	0	1	-39.64	4
87		5	max	4.551	7	5.563	4	0	1	0	1	0	1	-2.693	1
88			min	-.172	1	.319	1	0	1	0	1	0	1	-46.981	4
89		6	max	4.551	7	2.782	4	0	1	0	1	0	1	-2.945	1
90			min	-.172	1	.159	1	0	1	0	1	0	1	-51.385	4
91		7	max	4.551	7	0	1	0	1	0	1	0	1	-3.029	1
92			min	-.172	1	0	1	0	1	0	1	0	1	-52.853	4
93		8	max	4.551	7	-.159	1	0	1	0	1	0	1	-2.945	1
94			min	-.172	1	-2.782	4	0	1	0	1	0	1	-51.385	4
95		9	max	4.551	7	-.319	1	0	1	0	1	0	1	-2.693	1
96			min	-.172	1	-5.563	4	0	1	0	1	0	1	-46.981	4
97		10	max	4.551	7	-.478	1	0	1	0	1	0	1	-2.272	1
98			min	-.172	1	-8.345	4	0	1	0	1	0	1	-39.64	4
99		11	max	4.551	7	-.638	1	0	1	0	1	0	1	-1.683	1
100			min	-.172	1	-11.127	4	0	1	0	1	0	1	-29.363	4
101		12	max	4.551	7	-.797	1	0	1	0	1	0	1	-.926	1
102			min	-.172	1	-13.909	4	0	1	0	1	0	1	-16.15	4

Vu

Vu

Mu

Mu

Envelope Member Section Forces (Continued)

	Member	Sec		Axial[k]	LC	y She...	LC	z Shear[...	LC	Torque[k-ft]	LC	y-y Moment[k-...	LC	z-z Moment[...	LC
103		13	max	4.551	7	-.957	1	0	1	0	1	0	1	0	1
104			min	-.172	1	-16.69	4	0	1	0	1	0	1	0	1

Envelope Joint Reactions

	Joint		X [k]	LC	Y [k]	LC	Z [k]	LC	MX [k-ft]	LC	MY [k-ft]	LC	MZ [k-ft]	LC
1	N1	max	0	7	6.038	4	0	1	0	1	0	1	0	1
2		min	-1.686	6	.82	1	0	1	0	1	0	1	0	1
3	N4	max	0	1	6.038	4	0	1	0	1	0	1	0	1
4		min	0	1	.82	1	0	1	0	1	0	1	0	1
5	N5	max	0	1	4.839	4	0	1	0	1	0	1	0	1
6		min	0	1	.664	1	0	1	0	1	0	1	0	1
7	N6	max	0	1	3.475	7	0	1	0	1	0	1	0	1
8		min	0	1	.5	1	0	1	0	1	0	1	0	1
9	N7	max	0	1	2.399	6	0	1	0	1	0	1	0	1
10		min	0	1	.357	1	0	1	0	1	0	1	0	1
11	N8	max	0	1	1.501	6	0	1	0	1	0	1	0	1
12		min	0	1	.251	1	0	1	0	1	0	1	0	1
13	N9	max	0	1	.899	6	0	1	0	1	0	1	0	1
14		min	0	1	.186	1	0	1	0	1	0	1	0	1
15	N10	max	0	1	.682	7	0	1	0	1	0	1	0	1
16		min	0	1	.164	1	0	1	0	1	0	1	0	1
17	N11	max	0	1	.876	7	0	1	0	1	0	1	0	1
18		min	0	1	.186	1	0	1	0	1	0	1	0	1
19	N12	max	0	1	1.446	7	0	1	0	1	0	1	0	1
20		min	0	1	.251	1	0	1	0	1	0	1	0	1
21	N13	max	0	1	2.346	7	0	1	0	1	0	1	0	1
22		min	0	1	.357	1	0	1	0	1	0	1	0	1
23	N14	max	0	1	3.478	6	0	1	0	1	0	1	0	1
24		min	0	1	.5	1	0	1	0	1	0	1	0	1
25	N15	max	0	1	4.839	4	0	1	0	1	0	1	0	1
26		min	0	1	.664	1	0	1	0	1	0	1	0	1
27	Totals:	max	0	7	37.187	4	0	1						
28		min	-1.686	6	5.719	1	0	1						

Member Section Forces

	LC	Member Label	Sec	Axial[k]	y Shear[k]	z Shear[k]	Torque[k-ft]	y-y Mo...	z-z Mo...
1	4	M1	1	16.69	1.153	0	0	0	0
2			2	16.769	.702	0	0	0	-.607
3			3	16.848	.226	0	0	0	-.911
4			4	16.927	-.275	0	0	0	-.897
5			5	17.006	-.8	0	0	0	-.548
6			6	17.085	-1.351	0	0	0	.153
7			7	17.164	-1.926	0	0	0	1.221
8			8	17.243	-2.527	0	0	0	2.673
9			9	17.322	-3.152	0	0	0	4.525
10			10	17.4	-3.802	0	0	0	6.794
11			11	17.479	-4.477	0	0	0	9.494
12			12	17.558	-5.177	0	0	0	12.644
13			13	17.637	-5.901	0	0	0	16.258
14	4	M2	1	16.69	-1.153	0	0	0	0
15			2	16.769	-.702	0	0	0	.607
16			3	16.848	-.226	0	0	0	.911
17			4	16.927	.275	0	0	0	.897
18			5	17.006	.8	0	0	0	.548
19			6	17.085	1.351	0	0	0	-.153
20			7	17.164	1.926	0	0	0	-1.221
21			8	17.243	2.527	0	0	0	-2.673
22			9	17.322	3.152	0	0	0	-4.525
23			10	17.4	3.802	0	0	0	-6.794
24			11	17.479	4.477	0	0	0	-9.494
25			12	17.558	5.177	0	0	0	-12.644
26			13	17.637	5.901	0	0	0	-16.258
27	4	M3	1	5.901	-11.599	0	0	0	-16.258
28			2	5.901	-11.758	0	0	0	-3.931
29			3	5.901	-7.078	0	0	0	3.457
30			4	5.901	-3.783	0	0	0	7.365
31			5	5.901	-1.747	0	0	0	9.125
32			6	5.901	-.68	0	0	0	9.759
33			7	5.901 N_u	-.212 V_u	0	0	0	9.899
34			8	5.901	.68	0	0	0	9.759
35			9	5.901	1.747	0	0	0	9.125
36			10	5.901	3.783	0	0	0	7.365
37			11	5.901	7.078	0	0	0	3.457
38			12	5.901	11.758	0	0	0	-3.931
39			13	5.901	11.599	0	0	0	-16.258
40	4	M4	1	1.153	16.69	0	0	0	0
41			2	1.153 N_u	13.909	0	0	0	-16.15 M_u RISA
42			3	1.153	11.127	0	0	0	-29.363
43			4	1.153	8.345	0	0	0	-39.64
44			5	1.153	5.563	0	0	0	-46.981
45			6	1.153	2.782	0	0	0	-51.385
46			7	1.153 N_u	0 V_u	0	0	0	-52.853
47			8	1.153	-2.782	0	0	0	-51.385
48			9	1.153	-5.563	0	0	0	-46.981
49			10	1.153	-8.345	0	0	0	-39.64
50			11	1.153	-11.127	0	0	0	-29.363
51			12	1.153	-13.909	0	0	0	-16.15
52			13	1.153	-16.69	0	0	0	0

Member Section Forces

	LC	Member Label	Sec	Axial[k]	y Shear[k]	z Shear[k]	Torque[k-ft]	y-y Mo...	z-z Mo...
1	6	M1	1	16.69	4.178	0	0	0	0
2			2	16.769	3.14	0	0	0	-2.391
3			3	16.848	2.06	0	0	0	-4.09
4			4	16.927	.938	0	0	0	-5.071
5			5	17.006	-.225	0	0	0	-5.306
6			6	17.085	-1.429	0	0	0	-4.768
7			7	17.164	-2.675	0	0	0	-3.431
8			8	17.243	-3.962	0	0	0	-1.267
9			9	17.322	-5.291	0	0	0	1.751
10			10	17.4	-6.661	0	0	0	5.649
11			11	17.479 N_u	-8.073 V_u	0	0	0	10.456
12			12	17.558	-9.526	0	0	0	16.198
13			13	17.637	-11.02	0	0	0	22.901
14	6	M2	1	16.69	-4.178	0	0	0	0
15			2	16.769	-3.28	0	0	0	2.437
16			3	16.848	-2.341	0	0	0	4.274
17			4	16.927	-1.36	0	0	0	5.484
18			5	17.006	-.337	0	0	0	6.04
19			6	17.085	.727	0	0	0	5.915
20			7	17.164	1.832	0	0	0	5.082
21			8	17.243	2.979	0	0	0	3.514
22			9	17.322	4.167	0	0	0	1.185
23			10	17.4	5.396	0	0	0	-1.935
24			11	17.479	6.668	0	0	0	-5.87
25			12	17.558	7.98	0	0	0	-10.649
26			13	17.637	9.334	0	0	0	-16.297
27	6	M3	1	9.334	-12.548	0	0	0	-22.901
28			2	9.334 N_u	-12.708	0	0	0	-9.572 M_u RISA
29			3	9.334	-8.381	0	0	0	-.809
30			4	9.334	-5.073	0	0	0	4.462
31			5	9.334	-2.834	0	0	0	7.37
32			6	9.334	-1.492	0	0	0	8.861
33			7	9.334	-.753	0	0	0	9.572
34			8	9.334	.545	0	0	0	9.759
35			9	9.334	1.732	0	0	0	9.267
36			10	9.334	3.836	0	0	0	7.523
37			11	9.334	7.154	0	0	0	3.558
38			12	9.334	11.816	0	0	0	-3.909
39			13	9.334	11.657	0	0	0	-16.297
40	6	M4	1	4.178	16.69	0	0	0	0
41			2	4.178	13.909	0	0	0	-16.15
42			3	4.178	11.127	0	0	0	-29.363
43			4	4.178	8.345	0	0	0	-39.64
44			5	4.178	5.563	0	0	0	-46.981
45			6	4.178	2.782	0	0	0	-51.385
46			7	4.178	0	0	0	0	-52.853
47			8	4.178	-2.782	0	0	0	-51.385
48			9	4.178	-5.563	0	0	0	-46.981
49			10	4.178	-8.345	0	0	0	-39.64
50			11	4.178	-11.127	0	0	0	-29.363
51			12	4.178	-13.909	0	0	0	-16.15
52			13	4.178	-16.69	0	0	0	0

Member Section Forces

	LC	Member Label	Sec	Axial[k]	y Shear[k]	z Shear[k]	Torque[k-ft]	y-y Mo...	z-z Mo...
1	7	M1	1	16.69	4.551	0	0	0	0
2			2	16.769	3.513	0	0	0	-2.634
3			3	16.848	2.433	0	0	0	-4.577
4			4	16.927	1.311	0	0	0	-5.802
5			5	17.006 N_u	.148 V_u	0	0	0	-6.28
6			6	17.085	-1.056	0	0	0	-5.986
7			7	17.164	-2.302	0	0	0	-4.893
8			8	17.243	-3.589	0	0	0	-2.972
9			9	17.322	-4.918	0	0	0	-.198
10			10	17.4	-6.288	0	0	0	3.457
11			11	17.479	-7.7	0	0	0	8.02
12			12	17.558	-9.153	0	0	0	13.518
13			13	17.637	-10.647	0	0	0	19.978
14	7	M2	1	16.69	-4.551	0	0	0	0
15			2	16.769	-3.513	0	0	0	2.634
16			3	16.848	-2.433	0	0	0	4.577
17			4	16.927	-1.311	0	0	0	5.802
18			5	17.006	-.148	0	0	0	6.28
19			6	17.085	1.056	0	0	0	5.986
20			7	17.164	2.302	0	0	0	4.893
21			8	17.243	3.589	0	0	0	2.972
22			9	17.322	4.918	0	0	0	.198
23			10	17.4	6.288	0	0	0	-3.457
24			11	17.479	7.7	0	0	0	-8.02
25			12	17.558	9.153	0	0	0	-13.518
26			13	17.637	10.647	0	0	0	-19.978
27	7	M3	1	10.647	-12.16	0	0	0	-19.978
28			2	10.647	-12.319	0	0	0	-7.059
29			3	10.647	-7.846	0	0	0	1.139
30			4	10.647	-4.531	0	0	0	5.837
31			5	10.647	-2.344	0	0	0	8.227
32			6	10.647	-1.057	0	0	0	9.259
33			7	10.647	-.341	0	0	0	9.534
34			8	10.647	1.057	0	0	0	9.259
35			9	10.647	2.344	0	0	0	8.227
36			10	10.647	4.531	0	0	0	5.837
37			11	10.647	7.846	0	0	0	1.139
38			12	10.647	12.319	0	0	0	-7.059
39			13	10.647	12.16	0	0	0	-19.978
40	7	M4	1	4.551	16.69	0	0	0	0
41			2	4.551	13.909	0	0	0	-16.15
42			3	4.551	11.127	0	0	0	-29.363
43			4	4.551	8.345	0	0	0	-39.64
44			5	4.551	5.563	0	0	0	-46.981
45			6	4.551	2.782	0	0	0	-51.385
46			7	4.551	0	0	0	0	-52.853
47			8	4.551	-2.782	0	0	0	-51.385
48			9	4.551	-5.563	0	0	0	-46.981
49			10	4.551	-8.345	0	0	0	-39.64
50			11	4.551	-11.127	0	0	0	-29.363
51			12	4.551	-13.909	0	0	0	-16.15
52			13	4.551	-16.69	0	0	0	0

Load Combinations

	Description	Solve	PDelta	SRSS	B...	Fa...	B...	Fa...	B...	Fa...	B...	Fa...	B...	Fa...	B...	Fa...	B...	Fa...	B...	Fa...
1	DL	Yes			1	1														
2	Backfill one leg				1	1	2	1												
3	Backfill two legs + Surcharge two ...				1	1	2	1	3	1	6	1	7	1						
4	Backfill to FG (Deck Moment)	Yes			1	1	2	.5	3	.5	4	.5	5	1						
5	Backfill to FG (Knee Moment)	Yes			1	1	2	1	3	1	4	1	5	1						
6	Backfill to FG + LS left leg only	Yes			1	1	2	1	3	1	4	1	5	1	6	1				
7	Backfill to FG + LS both legs	Yes			1	1	2	1	3	1	4	1	5	1	6	1	7	1		

Envelope Member Section Forces

	Member	Sec		Axial[k]	LC	y She...	LC	z Shear[...	LC	Torque[k-ft]	LC	y-y Moment[k-...	LC	z-z Moment[...	LC	
1	M1	1	max	12.868	4	2.788	7	0	1	0	1	0	1	0	1	
2			min	.765	1	-.137	1	0	1	0	1	0	1	0	1	
3		2	max	12.931	4	2.109	7	0	1	0	1	0	1	.09	1	
4			min	.828	1	-.137	1	0	1	0	1	0	1	-1.6	7	
5		3	max	12.994	4	1.402	7	0	1	0	1	0	1	.179	1	
6			min	.891	1	-.137	1	0	1	0	1	0	1	-2.747	7	
7		4	max	13.058	4	.668	7	0	1	0	1	0	1	.269	1	
8			min	.955	1	-.4	4	0	1	0	1	0	1	-3.424	7	
9		5	max	13.121	4	-.094	7	0	1	0	1	0	1	.359	1	
10			min	1.018	1	-.741	4	0	1	0	1	0	1	-3.613	7	M_s
11		6	max	13.184	4	-.137	1	0	1	0	1	0	1	.814	4	
12			min	1.081	1	-1.097	6	0	1	0	1	0	1	-3.295	7	
13		7	max	13.247	4	-.137	1	0	1	0	1	0	1	1.649	4	
14			min	1.144	1	-1.914	6	0	1	0	1	0	1	-2.453	7	
15		8	max	13.31	4	-.137	1	0	1	0	1	0	1	2.729	4	
16			min	1.207	1	-2.759	6	0	1	0	1	0	1	-1.068	7	
17		9	max	13.373	4	-.137	1	0	1	0	1	0	1	4.063	4	
18			min	1.27	1	-3.631	6	0	1	0	1	0	1	.717	1	
19		10	max	13.436	4	-.137	1	0	1	0	1	0	1	5.66	4	
20			min	1.333	1	-4.531	6	0	1	0	1	0	1	.807	1	
21		11	max	13.499	4	-.137	1	0	1	0	1	0	1	7.912	6	M_s
22			min	1.396	1	-5.459	6	0	1	0	1	0	1	.896	1	
23		12	max	13.562	4	-.137	1	0	1	0	1	0	1	11.786	6	
24			min	1.459	1	-6.414	6	0	1	0	1	0	1	.986	1	
25		13	max	13.626	4	-.137	1	0	1	0	1	0	1	16.293	6	
26			min	1.523	1	-7.397	6	0	1	0	1	0	1	1.076	1	
27	M2	1	max	12.868	4	.137	1	0	1	0	1	0	1	0	1	
28			min	.765	1	-2.788	7	0	1	0	1	0	1	0	1	
29		2	max	12.931	4	.137	1	0	1	0	1	0	1	1.6	7	
30			min	.828	1	-2.109	7	0	1	0	1	0	1	-.09	1	
31		3	max	12.994	4	.137	1	0	1	0	1	0	1	2.747	7	
32			min	.891	1	-1.402	7	0	1	0	1	0	1	-.179	1	
33		4	max	13.058	4	.4	4	0	1	0	1	0	1	3.424	7	
34			min	.955	1	-.695	6	0	1	0	1	0	1	-.269	1	
35		5	max	13.121	4	.741	4	0	1	0	1	0	1	3.613	7	
36			min	1.018	1	-.014	6	0	1	0	1	0	1	-.359	1	
37		6	max	13.184	4	1.096	4	0	1	0	1	0	1	3.295	7	
38			min	1.081	1	.137	1	0	1	0	1	0	1	-.814	4	
39		7	max	13.247	4	1.701	7	0	1	0	1	0	1	2.561	6	
40			min	1.144	1	.137	1	0	1	0	1	0	1	-1.649	4	
41		8	max	13.31	4	2.546	7	0	1	0	1	0	1	1.378	6	
42			min	1.207	1	.137	1	0	1	0	1	0	1	-2.729	4	
43		9	max	13.373	4	3.418	7	0	1	0	1	0	1	-.313	6	
44			min	1.27	1	.137	1	0	1	0	1	0	1	-4.063	4	
45		10	max	13.436	4	4.318	7	0	1	0	1	0	1	-.807	1	

Envelope Member Section Forces (Continued)

	Member	Sec		Axial[k]	LC	y She...	LC	z Shear[...	LC	Torque[k-ft]	LC	y-y Moment[k-...	LC	z-z Moment[...	LC	
46			min	1.333	1	.137	1	0	1	0	1	0	1	-5.66	4	
47		11	max	13.499	4	5.246	7	0	1	0	1	0	1	-.896	1	
48			min	1.396	1	.137	1	0	1	0	1	0	1	-7.529	4	
49		12	max	13.562	4	6.201	7	0	1	0	1	0	1	-.986	1	
50			min	1.459	1	.137	1	0	1	0	1	0	1	-10.255	7	
51		13	max	13.626	4	7.184	7	0	1	0	1	0	1	-1.076	1	
52			min	1.522	1	.137	1	0	1	0	1	0	1	-14.622	7	
53	M3	1	max	7.184	7	-.867	1	0	1	0	1	0	1	-1.076	1	
54			min	.137	1	-9.49	6	0	1	0	1	0	1	-16.293	6	
55		2	max	7.184	7	-.994	1	0	1	0	1	0	1	-.094	1	
56			min	.137	1	-9.618	6	0	1	0	1	0	1	-6.208	6	
57		3	max	7.184	7	-.591	1	0	1	0	1	0	1	2.944	4	
58			min	.137	1	-6.202	6	0	1	0	1	0	1	.271	6	
59		4	max	7.184	7	-.318	1	0	1	0	1	0	1	5.87	4	
60			min	.137	1	-3.649	6	0	1	0	1	0	1	.731	1	
61		5	max	7.184	7	-.16	1	0	1	0	1	0	1	7.155	4	
62			min	.137	1	-1.963	6	0	1	0	1	0	1	.832	1	
63		6	max	7.184	7	-.087	1	0	1	0	1	0	1	7.597	4	
64			min	.137	1	-.985	6	0	1	0	1	0	1	.856	1	
65		7	max	7.184	7	-.066	1	0	1	0	1	0	1	7.689	4	Ms
66			min	.137	1	-.473	6	0	1	0	1	0	1	.858	1	
67		8	max	7.184	7	.737	7	0	1	0	1	0	1	7.597	4	
68			min	.137	1	.087	1	0	1	0	1	0	1	.856	1	
69		9	max	7.184	7	1.683	7	0	1	0	1	0	1	7.155	4	
70			min	.137	1	.16	1	0	1	0	1	0	1	.832	1	
71		10	max	7.184	7	3.339	7	0	1	0	1	0	1	5.87	4	
72			min	.137	1	.318	1	0	1	0	1	0	1	.731	1	
73		11	max	7.184	7	5.896	7	0	1	0	1	0	1	2.944	4	
74			min	.137	1	.591	1	0	1	0	1	0	1	.462	1	
75		12	max	7.184	7	9.396	7	0	1	0	1	0	1	-.094	1	
76			min	.137	1	.994	1	0	1	0	1	0	1	-4.772	7	
77		13	max	7.184	7	9.268	7	0	1	0	1	0	1	-1.076	1	
78			min	.137	1	.867	1	0	1	0	1	0	1	-14.622	7	
79	M4	1	max	2.788	7	12.868	4	0	1	0	1	0	1	0	1	
80			min	-.137	1	.765	1	0	1	0	1	0	1	0	1	
81		2	max	2.788	7	10.724	4	0	1	0	1	0	1	-.74	1	
82			min	-.137	1	.638	1	0	1	0	1	0	1	-12.451	4	
83		3	max	2.788	7	8.579	4	0	1	0	1	0	1	-1.346	1	
84			min	-.137	1	.51	1	0	1	0	1	0	1	-22.639	4	
85		4	max	2.788	7	6.434	4	0	1	0	1	0	1	-1.818	1	
86			min	-.137	1	.383	1	0	1	0	1	0	1	-30.562	4	
87		5	max	2.788	7	4.289	4	0	1	0	1	0	1	-2.154	1	
88			min	-.137	1	.255	1	0	1	0	1	0	1	-36.222	4	
89		6	max	2.788	7	2.145	4	0	1	0	1	0	1	-2.356	1	
90			min	-.137	1	.128	1	0	1	0	1	0	1	-39.618	4	
91		7	max	2.788	7	0	1	0	1	0	1	0	1	-2.423	1	
92			min	-.137	1	0	1	0	1	0	1	0	1	-40.75	4	Ms
93		8	max	2.788	7	-.128	1	0	1	0	1	0	1	-2.356	1	
94			min	-.137	1	-2.145	4	0	1	0	1	0	1	-39.618	4	
95		9	max	2.788	7	-.255	1	0	1	0	1	0	1	-2.154	1	
96			min	-.137	1	-4.289	4	0	1	0	1	0	1	-36.222	4	
97		10	max	2.788	7	-.383	1	0	1	0	1	0	1	-1.818	1	
98			min	-.137	1	-6.434	4	0	1	0	1	0	1	-30.562	4	
99		11	max	2.788	7	-.51	1	0	1	0	1	0	1	-1.346	1	
100			min	-.137	1	-8.579	4	0	1	0	1	0	1	-22.639	4	
101		12	max	2.788	7	-.638	1	0	1	0	1	0	1	-.74	1	
102			min	-.137	1	-10.724	4	0	1	0	1	0	1	-12.451	4	

Envelope Member Section Forces (Continued)

	Member	Sec		Axial[k]	LC	y She...	LC	z Shear[...	LC	Torque[k-ft]	LC	y-y Moment[k-...	LC	z-z Moment[...	LC
103		13	max	2.788	7	-.765	1	0	1	0	1	0	1	0	1
104			min	-.137	1	-12.868	4	0	1	0	1	0	1	0	1

Envelope Joint Reactions

	Joint		X [k]	LC	Y [k]	LC	Z [k]	LC	MX [k-ft]	LC	MY [k-ft]	LC	MZ [k-ft]	LC
1	N1	max	0	7	4.735	4	0	1	0	1	0	1	0	1
2		min	-.963	6	.656	1	0	1	0	1	0	1	0	1
3	N4	max	0	1	4.735	4	0	1	0	1	0	1	0	1
4		min	0	1	.656	1	0	1	0	1	0	1	0	1
5	N5	max	0	1	3.767	4	0	1	0	1	0	1	0	1
6		min	0	1	.531	1	0	1	0	1	0	1	0	1
7	N6	max	0	1	2.684	7	0	1	0	1	0	1	0	1
8		min	0	1	.4	1	0	1	0	1	0	1	0	1
9	N7	max	0	1	1.814	6	0	1	0	1	0	1	0	1
10		min	0	1	.286	1	0	1	0	1	0	1	0	1
11	N8	max	0	1	1.105	6	0	1	0	1	0	1	0	1
12		min	0	1	.201	1	0	1	0	1	0	1	0	1
13	N9	max	0	1	.64	6	0	1	0	1	0	1	0	1
14		min	0	1	.149	1	0	1	0	1	0	1	0	1
15	N10	max	0	1	.475	7	0	1	0	1	0	1	0	1
16		min	0	1	.131	1	0	1	0	1	0	1	0	1
17	N11	max	0	1	.627	7	0	1	0	1	0	1	0	1
18		min	0	1	.149	1	0	1	0	1	0	1	0	1
19	N12	max	0	1	1.074	7	0	1	0	1	0	1	0	1
20		min	0	1	.201	1	0	1	0	1	0	1	0	1
21	N13	max	0	1	1.784	7	0	1	0	1	0	1	0	1
22		min	0	1	.286	1	0	1	0	1	0	1	0	1
23	N14	max	0	1	2.686	6	0	1	0	1	0	1	0	1
24		min	0	1	.4	1	0	1	0	1	0	1	0	1
25	N15	max	0	1	3.767	4	0	1	0	1	0	1	0	1
26		min	0	1	.531	1	0	1	0	1	0	1	0	1
27	Totals:	max	0	7	28.782	4	0	1						
28		min	-.963	6	4.576	1	0	1						

Member Section Forces

	LC	Member Label	Sec	Axial[k]	y Shear[k]	z Shear[k]	Torque[k-ft]	y-y Mo...	z-z Mo...
1	4	M1	1	12.868	.539	0	0	0	0
2			2	12.931	.24	0	0	0	-.255
3			3	12.994	-.073	0	0	0	-.31
4			4	13.058	-.4	0	0	0	-.156
5			5	13.121	-.741	0	0	0	.216
6			6	13.184	-1.096	0	0	0	.814
7			7	13.247	-1.464	0	0	0	1.649
8			8	13.31	-1.846	0	0	0	2.729
9			9	13.373	-2.243	0	0	0	4.063
10			10	13.436	-2.652	0	0	0	5.66
11			11	13.499	-3.076	0	0	0	7.529
12			12	13.562	-3.514	0	0	0	9.679
13			13	13.626	-3.965	0	0	0	12.119
14	4	M2	1	12.868	-.539	0	0	0	0
15			2	12.931	-.24	0	0	0	.255
16			3	12.994	.073	0	0	0	.31
17			4	13.058	.4	0	0	0	.156
18			5	13.121	.741	0	0	0	-.216
19			6	13.184	1.096	0	0	0	-.814
20			7	13.247	1.464	0	0	0	-1.649
21			8	13.31	1.846	0	0	0	-2.729
22			9	13.373	2.243	0	0	0	-4.063
23			10	13.436	2.652	0	0	0	-5.66
24			11	13.499	3.076	0	0	0	-7.529
25			12	13.562	3.514	0	0	0	-9.679
26			13	13.626	3.965	0	0	0	-12.119
27	4	M3	1	3.965	-8.891	0	0	0	-12.119
28			2	3.965	-9.018	0	0	0	-2.667
29			3	3.965	-5.379	0	0	0	2.944
30			4	3.965	-2.836	0	0	0	5.87
31			5	3.965	-1.281	0	0	0	7.155
32			6	3.965	-.483	0	0	0	7.597
33			7	3.965 N5	-.151	0	0	0	7.689
34			8	3.965	.483	0	0	0	7.597
35			9	3.965	1.281	0	0	0	7.155
36			10	3.965	2.836	0	0	0	5.87
37			11	3.965	5.379	0	0	0	2.944
38			12	3.965	9.018	0	0	0	-2.667
39			13	3.965	8.891	0	0	0	-12.119
40	4	M4	1	.539	12.868	0	0	0	0
41			2	.539	10.724	0	0	0	-12.451
42			3	.539	8.579	0	0	0	-22.639
43			4	.539	6.434	0	0	0	-30.562
44			5	.539	4.289	0	0	0	-36.222
45			6	.539	2.145	0	0	0	-39.618
46			7	.539 N5	0	0	0	0	-40.75
47			8	.539	-2.145	0	0	0	-39.618
48			9	.539	-4.289	0	0	0	-36.222
49			10	.539	-6.434	0	0	0	-30.562
50			11	.539	-8.579	0	0	0	-22.639
51			12	.539	-10.724	0	0	0	-12.451
52			13	.539	-12.868	0	0	0	0

Member Section Forces

	LC	Member Label	Sec	Axial[k]	y Shear[k]	z Shear[k]	Torque[k-ft]	y-y Mo...	z-z Mo...
1	6	M1	1	12.868	2.574	0	0	0	0
2			2	12.931	1.895	0	0	0	-1.46
3			3	12.994	1.189	0	0	0	-2.469
4			4	13.058	.454	0	0	0	-3.006
5			5	13.121	-.307	0	0	0	-3.056
6			6	13.184	-1.097	0	0	0	-2.599
7			7	13.247	-1.914	0	0	0	-1.618
8			8	13.31	-2.759	0	0	0	-.094
9			9	13.373	-3.631	0	0	0	1.99
10			10	13.436	-4.531	0	0	0	4.653
11			11	13.499 Ns	-5.459	0	0	0	7.912
12			12	13.562	-6.414	0	0	0	11.786
13			13	13.625	-7.397	0	0	0	16.293
14	6	M2	1	12.868	-2.574	0	0	0	0
15			2	12.931	-1.976	0	0	0	1.487
16			3	12.994	-1.349	0	0	0	2.573
17			4	13.058	-.695	0	0	0	3.242
18			5	13.121	-.014	0	0	0	3.475
19			6	13.184	.695	0	0	0	3.254
20			7	13.247	1.432	0	0	0	2.561
21			8	13.31	2.197	0	0	0	1.378
22			9	13.373	2.989	0	0	0	-.313
23			10	13.436	3.809	0	0	0	-2.53
24			11	13.499	4.656	0	0	0	-5.292
25			12	13.562	5.531	0	0	0	-8.615
26			13	13.625	6.434	0	0	0	-12.519
27	6	M3	1	6.434	-9.49	0	0	0	-16.293
28			2	6.434	-9.618	0	0	0	-6.208
29			3	6.434	-6.202	0	0	0	.271
30			4	6.434	-3.649	0	0	0	4.056
31			5	6.434	-1.963	0	0	0	6.061
32			6	6.434	-.985	0	0	0	7.033
33			7	6.434	-.473	0	0	0	7.465
34			8	6.434	.444	0	0	0	7.546
35			9	6.434	1.333	0	0	0	7.145
36			10	6.434	2.942	0	0	0	5.805
37			11	6.434	5.5	0	0	0	2.767
38			12	6.434	9.108	0	0	0	-2.972
39			13	6.434	8.981	0	0	0	-12.519
40	6	M4	1	2.574	12.868	0	0	0	0
41			2	2.574	10.724	0	0	0	-12.451
42			3	2.574	8.579	0	0	0	-22.639
43			4	2.574	6.434	0	0	0	-30.562
44			5	2.574	4.289	0	0	0	-36.222
45			6	2.574	2.145	0	0	0	-39.618
46			7	2.574	0	0	0	0	-40.75
47			8	2.574	-2.145	0	0	0	-39.618
48			9	2.574	-4.289	0	0	0	-36.222
49			10	2.574	-6.434	0	0	0	-30.562
50			11	2.574	-8.579	0	0	0	-22.639
51			12	2.574	-10.724	0	0	0	-12.451
52			13	2.574	-12.868	0	0	0	0

Member Section Forces

	LC	Member Label	Sec	Axial[k]	y Shear[k]	z Shear[k]	Torque[k-ft]	y-y Mo...	z-z Mo...
1	7	M1	1	12.868	2.788	0	0	0	0
2			2	12.931	2.109	0	0	0	-1.6
3			3	12.994	1.402	0	0	0	-2.747
4			4	13.058	.668	0	0	0	-3.424
5			5	13.121 N_s	-.094	0	0	0	-3.613
6			6	13.184	-.884	0	0	0	-3.295
7			7	13.247	-1.701	0	0	0	-2.453
8			8	13.31	-2.546	0	0	0	-1.068
9			9	13.373	-3.418	0	0	0	.877
10			10	13.436	-4.318	0	0	0	3.4
11			11	13.499	-5.246	0	0	0	6.52
12			12	13.562	-6.201	0	0	0	10.255
13			13	13.625	-7.184	0	0	0	14.622
14	7	M2	1	12.868	-2.788	0	0	0	0
15			2	12.931	-2.109	0	0	0	1.6
16			3	12.994	-1.402	0	0	0	2.747
17			4	13.058	-.668	0	0	0	3.424
18			5	13.121	.094	0	0	0	3.613
19			6	13.184	.884	0	0	0	3.295
20			7	13.247	1.701	0	0	0	2.453
21			8	13.31	2.546	0	0	0	1.068
22			9	13.373	3.418	0	0	0	-.877
23			10	13.436	4.318	0	0	0	-3.4
24			11	13.499	5.246	0	0	0	-6.52
25			12	13.562	6.201	0	0	0	-10.255
26			13	13.626	7.184	0	0	0	-14.622
27	7	M3	1	7.184	-9.268	0	0	0	-14.622
28			2	7.184	-9.396	0	0	0	-4.772
29			3	7.184	-5.896	0	0	0	1.384
30			4	7.184	-3.339	0	0	0	4.841
31			5	7.184	-1.683	0	0	0	6.55
32			6	7.184	-.737	0	0	0	7.261
33			7	7.184	-.238	0	0	0	7.444
34			8	7.184	.737	0	0	0	7.261
35			9	7.184	1.683	0	0	0	6.55
36			10	7.184	3.339	0	0	0	4.841
37			11	7.184	5.896	0	0	0	1.384
38			12	7.184	9.396	0	0	0	-4.772
39			13	7.184	9.268	0	0	0	-14.622
40	7	M4	1	2.788	12.868	0	0	0	0
41			2	2.788	10.724	0	0	0	-12.451
42			3	2.788	8.579	0	0	0	-22.639
43			4	2.788	6.434	0	0	0	-30.562
44			5	2.788	4.289	0	0	0	-36.222
45			6	2.788	2.145	0	0	0	-39.618
46			7	2.788	0	0	0	0	-40.75
47			8	2.788	-2.145	0	0	0	-39.618
48			9	2.788	-4.289	0	0	0	-36.222
49			10	2.788	-6.434	0	0	0	-30.562
50			11	2.788	-8.579	0	0	0	-22.639
51			12	2.788	-10.724	0	0	0	-12.451
52			13	2.788	-12.868	0	0	0	0

Load Combinations

	Description	Solve	PDelta	SRSS	B...	Fa...	B...	Fa...	B...	Fa...	B...	Fa...	B...	Fa...	B...	Fa...	B...	Fa...	B...	Fa...
1	DL	Yes			1	1														
2	Backfill one leg	Yes			1	1	2	1												
3	Backfill two legs + Surcharge two ...	Yes			1	1	2	1	3	1	6	1	7	1						
4	Backfill to FG (Deck Moment)				1	1	2	.5	3	.5	4	.5	5	1						
5	Backfill to FG (Knee Moment)				1	1	2	1	3	1	4	1	5	1						
6	Backfill to FG + LS left leg only				1	1	2	1	3	1	4	1	5	1	6	1				
7	Backfill to FG + LS both legs				1	1	2	1	3	1	4	1	5	1	6	1	7	1		

Envelope Member Section Forces

	Member	Sec		Axial[k]	LC	y She...	LC	z Shear[...	LC	Torque[k-ft]	LC	y-y Moment[k-...	LC	z-z Moment[...	LC
1	M1	1	max	0	1	0	1	0	1	0	1	0	1	0	1
2			min	0	1	0	1	0	1	0	1	0	1	0	1
3		2	max	.063	3	0	1	0	1	0	1	0	1	.029	3
4			min	.063	2	-.094	3	0	1	0	1	0	1	0	1
5		3	max	.126	3	0	1	0	1	0	1	0	1	.129	3
6			min	.126	2	-.216	3	0	1	0	1	0	1	0	1
7		4	max	.189	3	0	1	0	1	0	1	0	1	.317	3
8			min	.189	2	-.365	3	0	1	0	1	0	1	0	1
9		5	max	.252	3	0	1	0	1	0	1	0	1	.612	3
10			min	.252	2	-.542	3	0	1	0	1	0	1	0	1
11		6	max	.316	3	0	1	0	1	0	1	0	1	1.031	3
12			min	.316	2	-.747	3	0	1	0	1	0	1	0	1
13		7	max	.379	3	0	1	0	1	0	1	0	1	1.593	3
14			min	.379	2	-.979	3	0	1	0	1	0	1	0	1
15		8	max	.442	3	0	1	0	1	0	1	0	1	2.315	3
16			min	.442	2	-1.239	3	0	1	0	1	0	1	0	1
17		9	max	.505	3	0	1	0	1	0	1	0	1	3.217	3
18			min	.505	2	-1.527	3	0	1	0	1	0	1	0	1
19		10	max	.568	3	0	1	0	1	0	1	0	1	4.314	3
20			min	.568	2	-1.842	3	0	1	0	1	0	1	0	1
21		11	max	.631	3	0	1	0	1	0	1	0	1	5.627	3
22			min	.631	2	-2.185	3	0	1	0	1	0	1	0	1
23		12	max	.694	3	0	1	0	1	0	1	0	1	7.173	3
24			min	.694	2	-2.555	3	0	1	0	1	0	1	0	1
25		13	max	.757	3	0	1	0	1	0	1	0	1	8.969	3
26			min	.757	2	-2.953	3	0	1	0	1	0	1	0	1
27	M2	1	max	0	1	0	1	0	1	0	1	0	1	0	1
28			min	0	1	0	1	0	1	0	1	0	1	0	1
29		2	max	.063	3	.094	3	0	1	0	1	0	1	0	1
30			min	.063	1	0	1	0	1	0	1	0	1	-.029	3
31		3	max	.126	3	.216	3	0	1	0	1	0	1	0	1
32			min	.126	1	0	1	0	1	0	1	0	1	-.129	3
33		4	max	.189	3	.365	3	0	1	0	1	0	1	0	1
34			min	.189	1	0	1	0	1	0	1	0	1	-.317	3
35		5	max	.252	3	.542	3	0	1	0	1	0	1	0	1
36			min	.252	1	0	1	0	1	0	1	0	1	-.612	3
37		6	max	.316	3	.747	3	0	1	0	1	0	1	0	1
38			min	.316	1	0	1	0	1	0	1	0	1	-1.031	3
39		7	max	.379	3	.979	3	0	1	0	1	0	1	0	1
40			min	.379	1	0	1	0	1	0	1	0	1	-1.593	3
41		8	max	.442	3	1.239	3	0	1	0	1	0	1	0	1
42			min	.442	1	0	1	0	1	0	1	0	1	-2.315	3
43		9	max	.505	3	1.527	3	0	1	0	1	0	1	0	1
44			min	.505	1	0	1	0	1	0	1	0	1	-3.217	3
45		10	max	.568	3	1.842	3	0	1	0	1	0	1	0	1

Envelope Member Section Forces (Continued)

	Member	Sec		Axial[k]	LC	y She...	LC	z Shear[...	LC	Torque[k-ft]	LC	y-y Moment[k-...	LC	z-z Moment[...	LC
46			min	.568	1	0	1	0	1	0	1	0	1	-4.314	3
47		11	max	.631	3	2.185	3	0	1	0	1	0	1	0	1
48			min	.631	1	0	1	0	1	0	1	0	1	-5.627	3
49		12	max	.694	3	2.555	3	0	1	0	1	0	1	0	1
50			min	.694	1	0	1	0	1	0	1	0	1	-7.173	3
51		13	max	.757	3	2.953	3	0	1	0	1	0	1	0	1
52			min	.757	1	0	1	0	1	0	1	0	1	-8.969	3
53	M3	1	max	2.953	3	-.302	1	0	1	0	1	0	1	0	1
54			min	0	1	-.757	2	0	1	0	1	0	1	-8.969	3
55		2	max	2.953	3	-.43	1	0	1	0	1	0	1	.386	1
56			min	0	1	-.885	2	0	1	0	1	0	1	-8.102	3
57		3	max	2.953	3	-.21	1	0	1	0	1	0	1	.541	1
58			min	0	1	-1.012	2	0	1	0	1	0	1	-7.101	3
59		4	max	2.953	3	.099	1	0	1	0	1	0	1	.561	1
60			min	0	1	-1.14	3	0	1	0	1	0	1	-5.965	3
61		5	max	2.953	3	.104	1	0	1	0	1	0	1	.524	1
62			min	0	1	-1.248	3	0	1	0	1	0	1	-4.715	3
63		6	max	2.953	3	.08	1	0	1	0	1	0	1	.481	1
64			min	0	1	-.928	3	0	1	0	1	0	1	-3.802	3
65		7	max	2.953	3	-.047	1	0	1	0	1	0	1	.463	1
66			min	0	1	-.582	2	0	1	0	1	0	1	-3.472	3
67		8	max	2.953	3	.928	3	0	1	0	1	0	1	.481	1
68			min	0	1	-.421	2	0	1	0	1	0	1	-3.802	3
69		9	max	2.953	3	1.248	3	0	1	0	1	0	1	.542	2
70			min	0	1	-.286	2	0	1	0	1	0	1	-4.715	3
71		10	max	2.953	3	1.14	3	0	1	0	1	0	1	.65	2
72			min	0	1	-.166	2	0	1	0	1	0	1	-5.965	3
73		11	max	2.953	3	1.012	3	0	1	0	1	0	1	.622	2
74			min	0	1	.21	1	0	1	0	1	0	1	-7.101	3
75		12	max	2.953	3	.885	3	0	1	0	1	0	1	.426	2
76			min	0	1	.43	1	0	1	0	1	0	1	-8.102	3
77		13	max	2.953	3	.757	3	0	1	0	1	0	1	0	1
78			min	0	1	.302	1	0	1	0	1	0	1	-8.969	3

M_s

Envelope Joint Reactions

	Joint		X [k]	LC	Y [k]	LC	Z [k]	LC	MX [k-ft]	LC	MY [k-ft]	LC	MZ [k-ft]	LC
1	N1	max	0	3	.455	1	0	1	0	1	0	1	0	1
2		min	-1.99	2	0	2	0	1	0	1	0	1	0	1
3	N4	max	0	1	.455	1	0	1	0	1	0	1	0	1
4		min	0	1	0	3	0	1	0	1	0	1	0	1
5	N5	max	0	1	.347	1	0	1	0	1	0	1	0	1
6		min	0	1	0	2	0	1	0	1	0	1	0	1
7	N6	max	0	1	.254	1	0	1	0	1	0	1	0	1
8		min	0	1	0	3	0	1	0	1	0	1	0	1
9	N7	max	0	1	.242	2	0	1	0	1	0	1	0	1
10		min	0	1	.019	3	0	1	0	1	0	1	0	1
11	N8	max	0	1	.447	3	0	1	0	1	0	1	0	1
12		min	0	1	.133	1	0	1	0	1	0	1	0	1
13	N9	max	0	1	.68	3	0	1	0	1	0	1	0	1
14		min	0	1	.104	1	0	1	0	1	0	1	0	1
15	N10	max	0	1	.753	3	0	1	0	1	0	1	0	1
16		min	0	1	.094	1	0	1	0	1	0	1	0	1
17	N11	max	0	1	.68	3	0	1	0	1	0	1	0	1
18		min	0	1	.104	1	0	1	0	1	0	1	0	1
19	N12	max	0	1	.447	3	0	1	0	1	0	1	0	1
20		min	0	1	.133	1	0	1	0	1	0	1	0	1

Envelope Joint Reactions (Continued)

	Joint		X [k]	LC	Y [k]	LC	Z [k]	LC	MX [k-ft]	LC	MY [k-ft]	LC	MZ [k-ft]	LC
21	N13	max	0	1	.255	2	0	1	0	1	0	1	0	1
22		min	0	1	.019	3	0	1	0	1	0	1	0	1
23	N14	max	0	1	.288	2	0	1	0	1	0	1	0	1
24		min	0	1	0	3	0	1	0	1	0	1	0	1
25	N15	max	0	1	.347	1	0	1	0	1	0	1	0	1
26		min	0	1	0	3	0	1	0	1	0	1	0	1
27	Totals:	max	0	3	3.045	1	0	1						
28		min	-1.99	2	3.045	3	0	1						

Member Section Forces

	LC	Member Label	Sec	Axial[k]	y Shear[k]	z Shear[k]	Torque[k-ft]	y-y Mo...	z-z Mo...
1	3	M1	1	0	0	0	0	0	0
2			2	.063	-.094	0	0	0	.029
3			3	.126	-.216	0	0	0	.129
4			4	.189	-.365	0	0	0	.317
5			5	.252	-.542	0	0	0	.612
6			6	.316	-.747	0	0	0	1.031
7			7	.379	-.979	0	0	0	1.593
8			8	.442	-1.239	0	0	0	2.315
9			9	.505	-1.527	0	0	0	3.217
10			10	.568	-1.842	0	0	0	4.314
11			11	.631	-2.185	0	0	0	5.627
12			12	.694	-2.555	0	0	0	7.173
13			13	.757	-2.953	0	0	0	8.969
14	3	M2	1	0	0	0	0	0	0
15			2	.063	.094	0	0	0	-.029
16			3	.126	.216	0	0	0	-.129
17			4	.189	.365	0	0	0	-.317
18			5	.252	.542	0	0	0	-.612
19			6	.316	.747	0	0	0	-1.031
20			7	.379	.979	0	0	0	-1.593
21			8	.442	1.239	0	0	0	-2.315
22			9	.505	1.527	0	0	0	-3.217
23			10	.568	1.842	0	0	0	-4.314
24			11	.631	2.185	0	0	0	-5.627
25			12	.694	2.555	0	0	0	-7.173
26			13	.757	2.953	0	0	0	-8.969
27	3	M3	1	2.953	-.757	0	0	0	-8.969
28			2	2.953 N_s	-.885	0	0	0	-8.102
29			3	2.953	-1.012	0	0	0	-7.101
30			4	2.953	-1.14	0	0	0	-5.965
31			5	2.953	-1.248	0	0	0	-4.715
32			6	2.953	-.928	0	0	0	-3.802
33			7	2.953	-.376	0	0	0	-3.472
34			8	2.953	.928	0	0	0	-3.802
35			9	2.953	1.248	0	0	0	-4.715
36			10	2.953	1.14	0	0	0	-5.965
37			11	2.953	1.012	0	0	0	-7.101
38			12	2.953	.885	0	0	0	-8.102
39			13	2.953	.757	0	0	0	-8.969

Load Combinations

	Description	Solve	PDelta	SRSS	B...	Fa...	B...	Fa...	B...	Fa...	B...	Fa...	B...	Fa...	B...	Fa...	B...	Fa...	B...	Fa...
1	DL	Yes			1	1.25														
2	Backfill one leg	Yes			1	1.25	2	1.5												
3	Backfill two legs + Surcharge two ...	Yes			1	1.25	2	1.5	3	1.5	6	1.75	7	1.75						
4	Backfill to FG (Deck Moment)				1	1.25	2	.9	3	.9	4	.75	5	1.3						
5	Backfill to FG (Knee Moment)				1	1.25	2	1.5	3	1.5	4	1.5	5	1.3						
6	Backfill to FG + LS left leg only				1	1.25	2	1.5	3	1.5	4	1.5	5	1.3	6	1.75				
7	Backfill to FG + LS both legs				1	1.25	2	1.5	3	1.5	4	1.5	5	1.3	6	1.75	7	1.75		

Envelope Member Section Forces

	Member	Sec		Axial[k]	LC	y She...	LC	z Shear[...	LC	Torque[k-ft]	LC	y-y Moment[k-...	LC	z-z Moment[...	LC
1	M1	1	max	0	1	0	1	0	1	0	1	0	1	0	1
2			min	0	1	0	1	0	1	0	1	0	1	0	1
3		2	max	.079	3	0	1	0	1	0	1	0	1	.05	3
4			min	.079	1	-.161	3	0	1	0	1	0	1	0	1
5		3	max	.158	3	0	1	0	1	0	1	0	1	.22	3
6			min	.158	1	-.364	3	0	1	0	1	0	1	0	1
7		4	max	.237	3	0	1	0	1	0	1	0	1	.535	3
8			min	.237	1	-.608	3	0	1	0	1	0	1	0	1
9		5	max	.316	3	0	1	0	1	0	1	0	1	1.022	3
10			min	.316	1	-.894	3	0	1	0	1	0	1	0	1
11		6	max	.394	3	0	1	0	1	0	1	0	1	1.71	3
12			min	.394	1	-1.221	3	0	1	0	1	0	1	0	1
13		7	max	.473	3	0	1	0	1	0	1	0	1	2.625	3
14			min	.473	1	-1.589	3	0	1	0	1	0	1	0	1
15		8	max	.552	3	0	1	0	1	0	1	0	1	3.794	3
16			min	.552	1	-1.999	3	0	1	0	1	0	1	0	1
17		9	max	.631	3	0	1	0	1	0	1	0	1	5.244	3
18			min	.631	1	-2.451	3	0	1	0	1	0	1	0	1
19		10	max	.71	3	0	1	0	1	0	1	0	1	7.002	3
20			min	.71	1	-2.943	3	0	1	0	1	0	1	0	1
21		11	max	.789	3	0	1	0	1	0	1	0	1	9.096	3
22			min	.789	1	-3.478	3	0	1	0	1	0	1	0	1
23		12	max	.868	3	0	1	0	1	0	1	0	1	11.552	3
24			min	.868	1	-4.053	3	0	1	0	1	0	1	0	1
25		13	max	.947	3	0	1	0	1	0	1	0	1	14.397	3
26			min	.947	1	-4.671	3	0	1	0	1	0	1	0	1
27	M2	1	max	0	1	0	1	0	1	0	1	0	1	0	1
28			min	0	1	0	1	0	1	0	1	0	1	0	1
29		2	max	.079	3	.161	3	0	1	0	1	0	1	0	1
30			min	.079	1	0	1	0	1	0	1	0	1	-.05	3
31		3	max	.158	3	.364	3	0	1	0	1	0	1	0	1
32			min	.158	1	0	1	0	1	0	1	0	1	-.22	3
33		4	max	.237	3	.608	3	0	1	0	1	0	1	0	1
34			min	.237	1	0	1	0	1	0	1	0	1	-.535	3
35		5	max	.316	3	.894	3	0	1	0	1	0	1	0	1
36			min	.316	1	0	1	0	1	0	1	0	1	-1.022	3
37		6	max	.394	3	1.221	3	0	1	0	1	0	1	0	1
38			min	.394	1	0	1	0	1	0	1	0	1	-1.71	3
39		7	max	.473	3	1.589	3	0	1	0	1	0	1	0	1
40			min	.473	1	0	1	0	1	0	1	0	1	-2.625	3
41		8	max	.552	3	1.999	3	0	1	0	1	0	1	0	1
42			min	.552	1	0	1	0	1	0	1	0	1	-3.794	3
43		9	max	.631	3	2.451	3	0	1	0	1	0	1	0	1
44			min	.631	1	0	1	0	1	0	1	0	1	-5.244	3
45		10	max	.71	3	2.943	3	0	1	0	1	0	1	0	1

Envelope Member Section Forces (Continued)

	Member	Sec		Axial[k]	LC	y She...	LC	z Shear[...	LC	Torque[k-ft]	LC	y-y Moment[k-...	LC	z-z Moment[...	LC
46			min	.71	1	0	1	0	1	0	1	0	1	-7.002	3
47		11	max	.789	3	3.478	3	0	1	0	1	0	1	0	1
48			min	.789	1	0	1	0	1	0	1	0	1	-9.096	3
49		12	max	.868	3	4.053	3	0	1	0	1	0	1	0	1
50			min	.868	1	0	1	0	1	0	1	0	1	-11.552	3
51		13	max	.947	3	4.671	3	0	1	0	1	0	1	0	1
52			min	.947	1	0	1	0	1	0	1	0	1	-14.397	3
53	M3	1	max	4.671	3	-.378	1	0	1	0	1	0	1	0	1
54			min	0	1	-.947	3	0	1	0	1	0	1	-14.397	3
55		2	max	4.671	3	-.537	1	0	1	0	1	0	1	.483	1
56			min	0	1	-1.106	3	0	1	0	1	0	1	-13.314	3
57		3	max	4.671	3	-.262	1	0	1	0	1	0	1	.676	1
58			min	0	1	-1.265	2	0	1	0	1	0	1	-12.062	3
59		4	max	4.671	3	.124	1	0	1	0	1	0	1	.701	1
60			min	0	1	-1.425	2	0	1	0	1	0	1	-10.642	3
61		5	max	4.671	3	.13	1	0	1	0	1	0	1	.654	1
62			min	0	1	-1.584	3	0	1	0	1	0	1	-9.054	3
63		6	max	4.671	3	.1	1	0	1	0	1	0	1	.601	1
64			min	0	1	-1.298	3	0	1	0	1	0	1	-7.768	3
65		7	max	4.671	3	-.059	1	0	1	0	1	0	1	.579	1
66			min	0	1	-.954	2	0	1	0	1	0	1	-7.286	3
67		8	max	4.671	3	1.298	3	0	1	0	1	0	1	.601	1
68			min	0	1	-.705	2	0	1	0	1	0	1	-7.768	3
69		9	max	4.671	3	1.584	3	0	1	0	1	0	1	.654	1
70			min	0	1	-.482	2	0	1	0	1	0	1	-9.054	3
71		10	max	4.671	3	1.425	3	0	1	0	1	0	1	.764	2
72			min	0	1	-.281	2	0	1	0	1	0	1	-10.642	3
73		11	max	4.671	3	1.265	3	0	1	0	1	0	1	.768	2
74			min	0	1	.262	1	0	1	0	1	0	1	-12.062	3
75		12	max	4.671	3	1.106	3	0	1	0	1	0	1	.534	2
76			min	0	1	.537	1	0	1	0	1	0	1	-13.314	3
77		13	max	4.671	3	.947	3	0	1	0	1	0	1	0	1
78			min	0	1	.378	1	0	1	0	1	0	1	-14.397	3

M_u

Envelope Joint Reactions

	Joint		X [k]	LC	Y [k]	LC	Z [k]	LC	MX [k-ft]	LC	MY [k-ft]	LC	MZ [k-ft]	LC
1	N1	max	0	3	.569	1	0	1	0	1	0	1	0	1
2		min	-2.985	2	0	2	0	1	0	1	0	1	0	1
3	N4	max	0	1	.569	1	0	1	0	1	0	1	0	1
4		min	0	1	0	3	0	1	0	1	0	1	0	1
5	N5	max	0	1	.434	1	0	1	0	1	0	1	0	1
6		min	0	1	0	2	0	1	0	1	0	1	0	1
7	N6	max	0	1	.318	1	0	1	0	1	0	1	0	1
8		min	0	1	0	2	0	1	0	1	0	1	0	1
9	N7	max	0	1	.228	1	0	1	0	1	0	1	0	1
10		min	0	1	0	3	0	1	0	1	0	1	0	1
11	N8	max	0	1	.446	3	0	1	0	1	0	1	0	1
12		min	0	1	.166	1	0	1	0	1	0	1	0	1
13	N9	max	0	1	.921	3	0	1	0	1	0	1	0	1
14		min	0	1	.13	1	0	1	0	1	0	1	0	1
15	N10	max	0	1	1.073	3	0	1	0	1	0	1	0	1
16		min	0	1	.118	1	0	1	0	1	0	1	0	1
17	N11	max	0	1	.921	3	0	1	0	1	0	1	0	1
18		min	0	1	.13	1	0	1	0	1	0	1	0	1
19	N12	max	0	1	.446	3	0	1	0	1	0	1	0	1
20		min	0	1	.166	1	0	1	0	1	0	1	0	1

Delta 2015.059.012 Chk Rgr

Envelope Joint Reactions (Continued)

	Joint		X [k]	LC	Y [k]	LC	Z [k]	LC	MX [k-ft]	LC	MY [k-ft]	LC	MZ [k-ft]	LC
21	N13	max	0	1	.357	2	0	1	0	1	0	1	0	1
22		min	0	1	0	3	0	1	0	1	0	1	0	1
23	N14	max	0	1	.385	2	0	1	0	1	0	1	0	1
24		min	0	1	0	3	0	1	0	1	0	1	0	1
25	N15	max	0	1	.443	2	0	1	0	1	0	1	0	1
26		min	0	1	0	3	0	1	0	1	0	1	0	1
27	Totals:	max	0	3	3.806	1	0	1						
28		min	-2.985	2	3.806	3	0	1						

Member Section Forces

	LC	Member Label	Sec	Axial[k]	y Shear[k]	z Shear[k]	Torque[k-ft]	y-y Mo...	z-z Mo...
1	3	M1	1	0	0	0	0	0	0
2			2	.079	-.161	0	0	0	.05
3			3	.158	-.364	0	0	0	.22
4			4	.237	-.608	0	0	0	.535
5			5	.316	-.894	0	0	0	1.022
6			6	.394	-1.221	0	0	0	1.71
7			7	.473	-1.589	0	0	0	2.625
8			8	.552	-1.999	0	0	0	3.794
9			9	.631	-2.451	0	0	0	5.244
10			10	.71	-2.943	0	0	0	7.002
11			11	.789	-3.478	0	0	0	9.096
12			12	.868	-4.053	0	0	0	11.552
13			13	.947	-4.671	0	0	0	14.397
14	3	M2	1	0	0	0	0	0	0
15			2	.079	.161	0	0	0	-.05
16			3	.158	.364	0	0	0	-.22
17			4	.237	.608	0	0	0	-.535
18			5	.316	.894	0	0	0	-1.022
19			6	.394	1.221	0	0	0	-1.71
20			7	.473	1.589	0	0	0	-2.625
21			8	.552	1.999	0	0	0	-3.794
22			9	.631	2.451	0	0	0	-5.244
23			10	.71	2.943	0	0	0	-7.002
24			11	.789	3.478	0	0	0	-9.096
25			12	.868	4.053	0	0	0	-11.552
26			13	.947	4.671	0	0	0	-14.397
27	3	M3	1	4.671	-.947	0	0	0	-14.397
28			2	4.671	-1.106	0	0	0	-13.314
29			3	4.671	-1.265	0	0	0	-12.062
30			4	4.671	-1.425	0	0	0	-10.642
31			5	4.671	-1.584	0	0	0	-9.054
32			6	4.671	-1.298	0	0	0	-7.768
33			7	4.671	-.537	0	0	0	-7.286
34			8	4.671	1.298	0	0	0	-7.768
35			9	4.671	1.584	0	0	0	-9.054
36			10	4.671	1.425	0	0	0	-10.642
37			11	4.671	1.265	0	0	0	-12.062
38			12	4.671	1.106	0	0	0	-13.314
39			13	4.671	.947	0	0	0	-14.397

Design/Analysis References:

1. AASHTO LRFD Bridge Design Specifications, 6th Edition.
2. NHDOT 2010 Standard Specifications for Road and Bridge Construction.
3. Das, Principles of Foundation Engineering, 5th Edition.
4. Holtz & Kovacs, Introduction to Geotechnical Engineering
5. AISC, Steel Construction Manual, 13th Edition
6. Highway Innovative Technology Evaluation Center (HITEC), Evaluation of the Con/Span Wingwall System, CERF Report #40580, July 2001.

Assumptions:

1. It is assumed that the failure plane of the soil to be retained by this wall will lie within the proposed backfill material.
2. Backfill and foundation material assumptions shall match that of the shop drawings.
3. The installation of the weepholes will preclude the development of hydrostatic pressures on the wall.
4. Passive earth pressure in front of the wall is ignored per AASHTO 11.6.3.5.
5. Wing Angles (w.r.t roadway). The 12x7 Box Culvert and Wingwalls comprise the crossing of VT Route 30 over an unnamed brook. All 4 WW's are skewed 45 deg from the culvert. The roadway is skewed 69 degrees from the culvert (i.e. 21 degrees off of square). Therefore, WW1 and WW4 are skewed 66 deg from the roadway, WW2 and WW3 are skewed 24 deg from the roadway.
6. Backslope Angle. WW2 and WW3 have backslopes of about 2.20:1, WW2 has a slightly taller design height and thus controls design. For third anchor on WW3, conservatively use the same as second anchor.
7. Live Load Surcharge. Vehicular Surcharge is applied when traffic can come within a distance of half the height of the wall to the back face of wall. N/A
8. Controlling Wingwall Design(s). WW2 has a slightly taller design height and thus controls design.
9. Design Methodology.

   - The HITEC Evaluation (page 3) explains that the Anchor Wall acts as a cantilever wall for most of its length since the weight of the soil within and above the anchors provides resistance to overturning. The wall also has attributes of a bin wall since arching and friction of soil masses between anchors provides additional resistance. Therefore, the provisions of AASHTO Sections 11.6 (Conventional Retaining Walls) and 11.11 (Modular Walls) shall be applied.
   - Per AASHTO 11.11.4.4, a maximum of 80% of the weight of the retained soil is effective in resisting overturning. The HITEC Evaluation (pages D29-D33) evaluated the accuracy of this assumption and found that using 80% of the soil weight is a conservative assumption.

General Input:

$ELV_{walltop} := 1632.06ft - 2in = 1631.89\,ft$ — Elevation of the Wingwall at its tallest point

$ELV_{walltip} := 1629.25ft$ — Elevation of Wingwall at its tip.

$ELV_{bot.ftg} := 1616.99ft$ — Elevation of the Bottom of the Wall Footing

$t_{ftg} := 3ft$ — Thickness of Wall Footing

$h_{ftg} := 3.17ft$ — Height of Wall Footing

$h_{short} := ELV_{walltip} - ELV_{bot.ftg} - h_{ftg} - 1in = 9.007\,ft$ — Short end of wall (less 1" for shim)

$h_{tall} := ELV_{walltop} - ELV_{bot.ftg} - h_{ftg} - 1in = 11.65\,ft$ — Tall end of wall (less 1" for shim)

$l_{wall} := 12ft$ — Length of Wall Panel

$l_{flat} := 1ft$ — Length of flat portion of wingwall before break in slope.

$t_{wall} := 10in$ — Thickness of Wall Panel

$t_{stem} := 6in$ — Thickness of Anchor Stem

$w_{flange} := 2ft + 6in$ — Width of Anchor Flange

$\alpha_{skew} := 24deg$ — Angle of ww skew in plan view, measured from edge of roadway. (to measure distance to traffic for each anchor)

$\theta_{wall} := 90deg$ — Wall batter angle with horizontal

$\theta_{anchor} := \theta_{wall} + 30deg$ — Anchor batter angle with horizontal

$\beta := atan\left(\frac{1}{2.20}\right) = 24.444 \cdot deg$ — Backfill slope angle with horizontal, measured perpendicular to the wall.

$d_{traffic} := 20ft$ — Estimated minimum distance to traffic, measured from backfill side of wall and perpendicular to the wall.

$BreakInSlope := 2ft$ — Assumed distance from face of guardrail to break-in-slope, meaured perpendicular to the wall.

Wall Material Properties

Concrete

$f_c := 5000\frac{lbf}{in^2}$ $E_c := 4074ksi$ $Aggregate_{diam} := .75in$

$\gamma_c := 150pcf$ Assumed unit weight of concrete panel.

β_1 = Stress Block Factor specified in Article 5.7.2.2

$$\beta_1 := \max\left[.65, \left[\begin{array}{l} .85 \quad \text{if } f_c < 4000psi \\ .85 - \frac{.05}{psi}\cdot\left(\frac{f_c - 4000psi}{1000}\right) \quad \text{otherwise} \end{array}\right]\right] = 0.8$$

Steel:

$f_y := 60000\frac{lbf}{in^2}$ $E_s := 29000ksi$

Soil:

$q_R := 6ksf$ Factored Bearing Resistance (per contract) at service limit state controls. Conservatively use factored loads at strength limit state against the service level bearing resistance shown.

$\gamma_s := 140pcf$ Assumed soil unit weight for all soil

$q_{sur} := 2ft\cdot\gamma_s = 280\cdot psf$ Surcharge Soil Pressure (AASHTO Tbl 3.11.6.4-2)

$\phi_{ftg} := 35deg$ Friction Angle of Soil below Wall Footing

$\phi_{backfill} := 34deg$ Friction Angle of Backfill Soil

$\delta_{wall} := 0.75\cdot\phi_{backfill} = 25.5\cdot deg$ AASHTO C3.11.5.9-1 and HITEC p.D19

$\delta_{anchor} := 0.50\cdot\phi_{backfill} = 17\cdot deg$ AASHTO C3.11.5.9-1 and HITEC p.D19

$$k_{a.wall} := \frac{\sin(\theta_{wall} + \phi_{backfill})^2}{\sin(\theta_{wall})^2\cdot\sin(\theta_{wall} - \delta_{wall})\cdot\left(1 + \sqrt{\frac{\sin(\phi_{backfill} + \delta_{wall})\cdot\sin(\phi_{backfill} - \beta)}{\sin(\theta_{wall} - \delta_{wall})\cdot\sin(\theta_{wall} + \beta)}}\right)^2} = 0.379$$

AASHTO 3.11.5.3

$$k_{a.anchor} := \frac{\sin(\theta_{anchor} + \phi_{backfill})^2}{\sin(\theta_{anchor})^2\cdot\sin(\theta_{anchor} - \delta_{anchor})\cdot\left(1 + \sqrt{\frac{\sin(\phi_{backfill} + \delta_{anchor})\cdot\sin(\phi_{backfill} - \beta)}{\sin(\theta_{anchor} - \delta_{anchor})\cdot\sin(\theta_{anchor} + \beta)}}\right)^2} = 0.121$$

AASHTO 3.11.5.3

$k_0 := 1 - \sin(\phi_{backfill}) = 0.441$ AASHTO 3.11.5.2-1

Determine Load Factors (Strength I) (AASHTO 1.3 and Table 3.4.1-1)

Load Modifiers

$\eta_D := 1.00$ Ductility for a conventional design

$\eta_R := 1.00$ Redundancy for conventional design

$\eta_I := 1.00$ Importance for a conventional bridge

$\eta_i := \max(\eta_D \cdot \eta_R \cdot \eta_I, 0.95)$ $\eta_i = 1$

Load Factor	Max	Min	Service	
γ_{DC}	1.25	0.9	1.0	Component Dead Loads
γ_{EH}	1.5	0.9	1.0	Horizontal Earth Loads
γ_{EV}	1.35	1.0	1.0	Vertical Earth Loads
γ_{LL}	1.75	1.75	1.0	Live Loads

Anchor Types, Layout and Backfill Geometry

ConnectedToBridge := "Yes" To account for the connection of the wing to the bridge. Choose between Yes and No.

$AnchorType_1$:= "D" Anchor Type to be tied to the back face of the wall. Chosen between Anchor Type B, C, D, and E as defined below.

$AnchorType_2$:= "C"

$AnchorType_3$:= "C"

$dist_{anchor.1} := 4ft$ Distance to each anchor is from culvert end of wing. Anchor 1 is closest to culvert.

$dist_{anchor.2} := 9ft$

$dist_{anchor.3} := 0$

Note: Research in HITEC report supports spacing from 2.5 ft (anchors are touching) to 5.5 feet (HITEC Report pages D29-D33). If distance between anchors increases beyond 5.5 ft, data supporting the usable 80% soil weight assumption shall be provided due to possible affects on soil arching between the anchors. Similarly, anchor closest to the wall tip shall not exceed 3 feet without supporting data.

If only 1 anchor is used, set $dist_{anchor2} = dist_{anchor3} = 0$.

If only 2 anchors are used, set $dist_{anchor3} = 0$.

Tributary Width of Wall for each Anchor

$$trib_{plates} := \begin{cases} 0 & \text{if } ConnectedToBridge = \text{"No"} \\ \frac{1}{2} \cdot dist_{anchor.1} & \text{otherwise} \end{cases} = 2\,ft$$

$$trib_1 := \begin{cases} l_{wall} - trib_{plates} & \text{if } dist_{anchor.2} = 0 \\ \frac{1}{2} \cdot \left(dist_{anchor.1} + dist_{anchor.2}\right) - trib_{plates} & \text{otherwise} \end{cases} = 4.5\,ft$$

$$trib_2 := \begin{cases} \left[l_{wall} - \frac{1}{2}\left(dist_{anchor.1} + dist_{anchor.2}\right)\right] & \text{if } dist_{anchor.3} = 0 \\ \frac{1}{2}\left(dist_{anchor.2} + dist_{anchor.3}\right) - \frac{1}{2}\left(dist_{anchor.1} + dist_{anchor.2}\right) & \text{otherwise} \end{cases} = 5.5\,ft$$

$$trib_3 := l_{wall} - \left(trib_1 + trib_2 + trib_{plates}\right) = 0\,ft$$

Height of Wall at CL of Each Anchor

$$h(x) := \begin{cases} 0 & \text{if } x = 0 \\ h_{tall} & \text{if } 0 < x \le l_{flat} \\ \left[h_{tall} - \left(\frac{h_{tall} - h_{short}}{l_{wall} - l_{flat}}\right) \cdot \left(x - l_{flat}\right)\right] & \text{otherwise} \end{cases}$$

$h_{wall.1} := h\left(dist_{anchor.1}\right) = 10.929\,ft$ Height of wall at each anchor

$h_{wall.2} := h\left(dist_{anchor.2}\right) = 9.728\,ft$

$h_{wall.3} := h\left(dist_{anchor.3}\right) = 0\,ft$

Length of each Anchor Stem Extension

$$W(x) := \begin{cases} (0ft) & \text{if } x = \text{"B"} \\ (1ft) & \text{if } x = \text{"C"} \\ (2ft) & \text{if } x = \text{"D"} \\ (3ft) & \text{if } x = \text{"E"} \end{cases}$$

W is the additional anchor stem length beyond that of a "B" anchor. W(B) = 0

$$W_1 := W(AnchorType_1) = 2\,ft$$

$$W_2 := W(AnchorType_2) = 1\,ft$$

$$W_3 := W(AnchorType_3) = 1\,ft$$

Width of Soil Column above each Anchor

B_{bot} is the width of the soil column at the top of the anchor, measured from backfill side of wall to upper tip of each anchor.

$$B_{bot.1} := W_1 + (3ft + 5.375in) + \frac{7in}{\cos(30deg)} = 6.121\,ft$$

$$B_{bot.2} := W_2 + (3ft + 5.375in) + \frac{7in}{\cos(30deg)} = 5.121\,ft$$

$$B_{bot.3} := W_3 + (3ft + 5.375in) + \frac{7in}{\cos(30deg)} = 5.121\,ft$$

$B_{bot.lower}$ is the width of the soil column at the bottom of the anchor, measured from backfill side of wall to bottom tip of anchor.

$$B_{bot.lower.1} := W_1 + \left(1ft + 4in + \frac{7in}{\cos(30deg)}\right) = 4.007\,ft$$

$$B_{bot.lower.2} := W_2 + \left(1ft + 4in + \frac{7in}{\cos(30deg)}\right) = 3.007\,ft$$

$$B_{bot.lower.3} := W_3 + \left(1ft + 4in + \frac{7in}{\cos(30deg)}\right) = 3.007\,ft$$

Perpendicular Distance to Traffic at each Anchor

$$d_{traffic.1} := d_{traffic} + dist_{anchor.1} \cdot \tan(\alpha_{skew}) = 21.781\,ft$$

$$d_{traffic.2} := d_{traffic} + dist_{anchor.2} \cdot \tan(\alpha_{skew}) = 24.007\,ft$$

$$d_{traffic.3} := d_{traffic} + dist_{anchor.3} \cdot \tan(\alpha_{skew}) = 20\,ft$$

Height of backfill at CL of each anchor

$$d_{slope.1} := \max(0, \min(B_{bot.1}, d_{traffic.1} - BreakInSlope)) = 6.121\,ft$$

Distance to break in slope, measured perpendicular to wall from inside face of wall,

$d_{slope.2} := \max(0, \min(B_{bot.2}, d_{traffic.2} - BreakInSlope)) = 5.121\,ft$ limited by B.bot.

$d_{slope.3} := \max(0, \min(B_{bot.3}, d_{traffic.3} - BreakInSlope)) = 5.121\,ft$

$h_{backfill.1} := \max(h_{wall.1}, h_{wall.1} + \min(B_{bot.1}, d_{slope.1}) \cdot \tan(\beta)) = 13.712\,ft$

The height of backfill is taken at the end of the reinforced soil mass.

$h_{backfill.2} := \max(h_{wall.2}, h_{wall.2} + \min(B_{bot.2}, d_{slope.2}) \cdot \tan(\beta)) = 12.056\,ft$

$h_{backfill.3} := \max(h_{wall.3}, h_{wall.3} + \min(B_{bot.3}, d_{slope.3}) \cdot \tan(\beta)) = 2.328\,ft$

Check Pullout Capacity of Bolts at Connection Plates and Plate Bending

Connection plates connected to the culvert wall provide stability for half the distance of the wall from the culvert to Anchor 1. Per HITEC p. D23, connection is more rigid at the connection with the culvert, therefore use at-rest earth pressure coefficient.

$n_{plates} := 2$ Number of plates

$h_{wall.plate} := h_{tall} = 11.65\,ft$ Overall height of wall at plates

$h_{plate1} := 1ft + 8.5in = 1.708\,ft$ The plate closest to the ground.
Height is from bottom of wall to bolt line in Plate 1

$h_{plate2} := 5ft + 11.5in = 5.958\,ft$ If n_plates is 2, this is the top plate.
Height is from bottom of wall to bolt line in Plate 2

$h_{plate3} := 0$ If n_plate is 3, this is the top plate. If n_plate is 2, h.plate.3 is unused.
Height is from bottom of wall to bolt line in Plate 3

$h_{plate} := 10in$ Plate height.

$t_{plate} := 0.75in$ Plate thickness

$x_{bolt} := 4.5in$ Distance from corner of plate to CL of bolt

$Fy_{plate} := 36ksi$ Yield strength of plates (A36 steel)

$\phi_{bending} := 0.9$ AISC F1.(1)

$d_{bolt} := 1in$ Diameter of Coil Insert.

$A_{bolt} := \frac{\pi}{4} \cdot d_{bolt}^2 = 0.785 \cdot in^2$

$n_{bolts} := 2$ Number of bolts per side per plate

$F_{ub} := 60ksi$ Tensile Strength of a A307 bolt (AASHTO 6.4.3.1)

$\phi_{bolt} := 0.80$ Resistance factor for an A307 bolt in tension (AASHTO 6.5.4.2)

$T_{pullout} := \frac{8.5kip}{2} = 4.25 \cdot kip$ Factored Pullout capacity (SF = 3) of a Meadow Burke Double Wingwall Anchor (1-8NC 6x8) Ferrule Insert with 1" diameter bolt. 8500lbs tension, 4500lbs shear

Calculate Bolt Reaction at Plate 3

$$EH_{plate3} := \frac{1}{2} k_0 \cdot \gamma_s \cdot \left(h_{wall.plate} - \frac{h_{plate3} + h_{plate2}}{2}\right)^2 \cdot trib_{plates} \cdot \cos(\delta_{wall}) = 4.188 \cdot kip$$

$$y_{EH.plate3} := h_{wall.plate} - \frac{2}{3}\left(h_{wall.plate} - \frac{h_{plate3} + h_{plate2}}{2}\right) = 5.869\,ft$$

$$LS_{plate3} := \begin{cases} 0 & \text{if } d_{traffic} \geq \frac{1}{2} \cdot h_{wall.plate} \\ \left[k_0 \cdot q_{sur} \cdot \left(h_{wall.plate} - \frac{h_{plate3} + h_{plate2}}{2}\right) \cdot trib_{plates} \cdot \cos(\delta_{wall})\right] & \text{otherwise} \end{cases} = 0 \cdot kip$$

$$y_{LS.plate3} := h_{wall.plate} - \frac{1}{2}\left(h_{wall.plate} - \frac{h_{plate3} + h_{plate2}}{2}\right) = 7.315\,ft$$

$$R_{plate3} := \begin{cases} 0 & \text{if } n_{plates} = 2 \\ \frac{1.5 \cdot EH_{plate3} \cdot y_{EH.plate3} + 1.75 \cdot LS_{plate3} \cdot y_{LS.plate3}}{h_{plate3}} & \text{otherwise} \end{cases} = 0 \cdot kip$$

Calculate Bolt Reaction at Plate 2

$$EH1_{plate2} := \begin{cases} \left[\left[k_0 \cdot \gamma_s \cdot \left(h_{wall.plate} - \frac{h_{plate3} + h_{plate2}}{2}\right) \cdot \left(\frac{h_{plate3} + h_{plate2}}{2} \ldots + -\frac{h_{plate2} + h_{plate1}}{2}\right)\right] \cdot trib_{plates} \cdot \cos(\delta_{wall})\right] & \text{if } n_{plates} = 3 \\ \left[\frac{1}{2} k_0 \cdot \gamma_s \cdot \left(h_{wall.plate} - \frac{h_{plate2} + h_{plate1}}{2}\right)^2 \cdot trib_{plates} \cdot \cos(\delta_{wall})\right] & \text{otherwise} \end{cases} = 3.403 \cdot kip$$

$$y_{EH1.plate2} := \begin{cases} \left[\frac{h_{plate2} + h_{plate1}}{2} + \frac{1}{2} \cdot \left(\frac{h_{plate3} + h_{plate2}}{2} - \frac{h_{plate2} + h_{plate1}}{2}\right)\right] & \text{if } n_{plates} = 3 \\ \frac{h_{plate2} + h_{plate1}}{2} + \frac{1}{2} \cdot \left(h_{wall.plate} - \frac{h_{plate2} + h_{plate1}}{2}\right) & \text{otherwise} \end{cases} = 7.742\,ft$$

$$EH2_{plate2} := \frac{1}{2} k_0 \cdot \gamma_s \cdot \left(\frac{h_{plate3} + h_{plate2}}{2} - \frac{h_{plate2} + h_{plate1}}{2}\right)^2 \cdot trib_{plates} \cdot \cos(\delta_{wall}) = 0.041 \cdot kip$$

$$y_{EH2.plate2} := \begin{cases} \left[\frac{h_{plate2}+h_{plate1}}{2} + \frac{1}{3}\cdot\left(\frac{h_{plate3}+h_{plate2}}{2} - \frac{h_{plate2}+h_{plate1}}{2}\right)\right] & \text{if } n_{plates} = 3 \\ \frac{h_{plate2}+h_{plate1}}{2} + \frac{1}{3}\cdot\left(h_{wall.plate} - \frac{h_{plate2}+h_{plate1}}{2}\right) & \text{otherwise} \end{cases} = 6.439\,ft$$

$$LS_{plate2} := \begin{cases} \left[\left[k_0\cdot q_{sur}\cdot\left(\frac{h_{plate3}+h_{plate2}}{2} - \frac{h_{plate2}+h_{plate1}}{2}\right)\cdot trib_{plates}\cdot\cos(\delta_{wall})\right]\right] & \text{if } n_{plates} = 3 \\ \left[k_0\cdot q_{sur}\cdot\left(h_{wall.plate} - \frac{h_{plate2}+h_{plate1}}{2}\right)\cdot trib_{plates}\cdot\cos(\delta_{wall})\right] & \text{otherwise} \\ 0 & \text{if } d_{traffic} \ge \frac{1}{2}\cdot h_{wall.plate} \end{cases} = 0\cdot kip$$

$$y_{LS.plate2} := \begin{cases} \left[\frac{h_{plate2}+h_{plate1}}{2} + \frac{1}{2}\cdot\left(\frac{h_{plate3}+h_{plate2}}{2} - \frac{h_{plate2}+h_{plate1}}{2}\right)\right] & \text{if } n_{plates} = 3 \\ \left[\frac{h_{plate2}+h_{plate1}}{2} + \frac{1}{2}\cdot\left(h_{wall.plate} - \frac{h_{plate2}+h_{plate1}}{2}\right)\right] & \text{otherwise} \end{cases} = 7.742\,ft$$

$$R_{plate2} := \frac{1.5\cdot\left(EH1_{plate2}\cdot y_{EH1.plate2} + EH2_{plate2}\cdot y_{EH2.plate2}\right) + 1.75\cdot LS_{plate2}\cdot y_{LS.plate2}}{h_{plate2}} = 6.699\cdot kip$$

<u>Calculate Bolt Reaction at Plate 1</u>

$$EH1_{plate1} := k_0\cdot\gamma_s\cdot\left(h_{wall.plate} - \frac{h_{plate2}+h_{plate1}}{2}\right)\cdot\left(\frac{h_{plate2}+h_{plate1}}{2}\right)\cdot trib_{plates}\cdot\cos(\delta_{wall}) = 3.338\cdot kip$$

$$y_{EH1.plate1} := \frac{1}{2}\left(\frac{h_{plate2}+h_{plate1}}{2}\right) = 1.917\,ft$$

$$EH2_{plate1} := \frac{1}{2}k_0\cdot\gamma_s\cdot\left(\frac{h_{plate2}+h_{plate1}}{2}\right)^2\cdot trib_{plates}\cdot\cos(\delta_{wall}) = 0.818\cdot kip$$

$$y_{EH2.plate1} := \frac{1}{3}\cdot\left(\frac{h_{plate2}+h_{plate1}}{2}\right) = 1.278\,ft$$

$$LS_{plate1} := \begin{cases} 0 & \text{if } d_{traffic} \ge \frac{1}{2}\cdot h_{wall.plate} \\ \left[k_0\cdot q_{sur}\cdot\left(\frac{h_{plate2}+h_{plate1}}{2}\right)\cdot trib_{plates}\cdot\cos(\delta_{wall})\right] & \text{otherwise} \end{cases} = 0\cdot kip$$

$$y_{LS.plate1} := \frac{1}{2}\cdot\left(\frac{h_{plate2}+h_{plate1}}{2}\right) = 1.917\,ft$$

$$R_{plate1} := \frac{1.5\cdot\left(EH1_{plate1}\cdot y_{EH1.plate1} + EH2_{plate1}\cdot y_{EH2.plate1}\right) + 1.75\cdot LS_{plate1}\cdot y_{LS.plate1}}{h_{plate1}} = 6.536\cdot kip$$

Check Bolt Capacity

$T_n := 0.76\cdot A_{bolt}\cdot F_{ub} = 35.814\cdot kip$ Nominal Tensile Resistance of a bolt (AASHTO 6.13.2.10)

$T_r := \phi_{bolt}\cdot T_n = 28.651\cdot kip$

$T_{controlling} := n_{bolts}\cdot \min\left(T_{pullout}, T_r\right) = 8.5\cdot kip$ Controlling tensile capacity, per bolt.

$R_{plate.controlling} := \max\left(R_{plate1}, R_{plate2}, R_{plate3}\right) = 6.699\cdot kip$

$$Check_{BoltCapacity} := \begin{cases} \text{"OK"} & \text{if } T_{controlling} \geq R_{plate.controlling} \\ \text{"NG"} & \text{otherwise} \end{cases} = \text{"OK"}$$

Check Plate Bending

Sum moments about the corner of the plate.

$Mu_{plate} := R_{plate.controlling}\cdot x_{bolt} = 2.512\cdot kip\cdot ft$

$$Z_{plate} := \frac{h_{plate}\cdot t_{plate}^2}{4} = 1.406\cdot in^3$$

$Mp_{plate} := Fy_{plate}\cdot Z_{plate} = 4.219\cdot kip\cdot ft$

$\phi_{bending}\cdot Mp_{plate} = 3.797\cdot kip\cdot ft$

$$Check_{PlateBending} := \begin{cases} \text{"OK"} & \text{if } Mu_{plate} \leq \phi_{bending}\cdot Mp_{plate} \\ \text{"NG"} & \text{otherwise} \end{cases} = \text{"OK"}$$

External Stability Analysis at Anchor 1

Calculate Vertical Loads and Associated Lever Arms ***(All Lever Arms are from Point "O")***

$DC_{wall.1} := t_{wall} \cdot h_{wall.1} \cdot \gamma_c = 1.366 \cdot \frac{kip}{ft}$

$x_{DC.wall.1} := \frac{1}{2} t_{wall} = 0.417\,ft$

$EV1a_1 := \frac{1}{2} \gamma_s \cdot (h_{backfill.1} - h_{wall.1}) \cdot (d_{slope.1}) = 1.192 \cdot \frac{kip}{ft}$

$x_{EV1a.1} := t_{wall} + \frac{2}{3} d_{slope.1} = 4.914\,ft$

$EV1b_1 := \gamma_s \cdot (h_{backfill.1} - h_{wall.1}) \cdot (B_{bot.1} - d_{slope.1}) = 0 \cdot \frac{kip}{ft}$

$x_{EV1b.1} := t_{wall} + d_{slope.1} + \frac{1}{2}(B_{bot.1} - d_{slope.1}) = 6.955\,ft$

$EV2_1 := \gamma_s \cdot (h_{wall.1} - 3.5ft) \cdot B_{bot.1} = 6.367 \cdot \frac{kip}{ft}$

$x_{EV2.1} := t_{wall} + \frac{1}{2} B_{bot.1} = 3.894\,ft$

$EV3_1 := \gamma_s \cdot (3.5ft) \cdot \left(B_{bot.lower.1} - \frac{7in}{\cos(30deg)}\right) = 1.633 \cdot \frac{kip}{ft}$

$x_{EV3.1} := t_{wall} + \frac{1}{2}\left(B_{bot.lower.1} - \frac{7in}{\cos(30deg)}\right) = 2.5\,ft$

$EV4_1 := \gamma_s \cdot \frac{1}{2} \cdot 3.5ft \cdot \left[(W_1 + 3ft + 5.375in) - \left(B_{bot.lower.1} - \frac{7in}{\cos(30deg)}\right)\right] = 0.518 \cdot \frac{kip}{ft}$

$x_{EV4.1} := t_{wall} + B_{bot.lower.1} + \frac{1}{3} \cdot \left[W_1 + 3ft + 5.375in - \left(B_{bot.lower.1} - \frac{7in}{\cos(30deg)}\right)\right] = 5.545\,ft$

$DC_{anchor.1} := \frac{1}{trib_1} \cdot \begin{cases} (1740lbf) & \text{if } AnchorType_1 = \text{"B"} \\ (2010lbf) & \text{if } AnchorType_1 = \text{"C"} \\ (2285lbf) & \text{if } AnchorType_1 = \text{"D"} \\ (2550lbf) & \text{if } AnchorType_1 = \text{"E"} \end{cases} = 0.508 \cdot \frac{kip}{ft}$

(See Anchor Geometry Drawing)

$x_{anchor.1} := t_{wall} + \begin{cases} (2ft + 2.25in) & \text{if } AnchorType_1 = \text{"B"} \\ (2ft + 8.8125in) & \text{if } AnchorType_1 = \text{"C"} \\ (3ft + 5.125in) & \text{if } AnchorType_1 = \text{"D"} \\ (4ft + 0.0625in) & \text{if } AnchorType_1 = \text{"E"} \end{cases} = 4.26 \cdot ft$

$LS_{vert.1} := \begin{cases} \left[q_{sur} \cdot \left[B_{bot.1} - (d_{traffic.1})\right]\right] & \text{if } d_{traffic.1} < B_{bot.1} \\ 0 & \text{otherwise} \end{cases} = 0 \cdot \frac{kip}{ft}$

Used in bearing calcs only

$$x_{LS.vert.1} := t_{wall} + d_{traffic.1} + \frac{1}{2}\left(B_{bot.1} - d_{traffic.1}\right) = 14.785\,ft$$

$$DC_{ftg.1} := \gamma_c \cdot t_{ftg} \cdot h_{ftg} = 1.427 \cdot \frac{kip}{ft}$$

$$x_{DC.ftg.1} := \frac{t_{ftg}}{2} = 1.5\,ft$$

Note: This moment arm is measured from the front toe of the ftg since it is only used in bearing calculations.

Calculate Lateral Loads and Associated Lever Arms

$$EH1_{1.vert} := \frac{1}{2} k_{a.wall} \cdot \gamma_s \cdot \left(h_{backfill.1} - 3.5ft\right)^2 \cdot \sin\left(\delta_{wall}\right) = 1.191 \cdot \frac{kip}{ft}$$

$$EH1_{1.hor} := \frac{1}{2} k_{a.wall} \cdot \gamma_s \cdot \left(h_{backfill.1} - 3.5ft\right)^2 \cdot \cos\left(\delta_{wall}\right) = 2.498 \cdot \frac{kip}{ft}$$

$$x_{EH1.1} := t_{wall} + B_{bot.1} = 6.955\,ft$$

$$y_{EH1.1} := 3.5ft + \frac{1}{3}\left(h_{backfill.1} - 3.5ft\right) = 6.904\,ft$$

$$EH2_{1.vert} := k_{a.anchor} \cdot \gamma_s \cdot \left(h_{backfill.1} - 3.5ft\right) \cdot (4ft) \cdot \sin\left(\delta_{anchor} - 30deg\right) = -0.155 \cdot \frac{kip}{ft}$$

$$EH2_{1.hor} := k_{a.anchor} \cdot \gamma_s \cdot \left(h_{backfill.1} - 3.5ft\right) \cdot (4ft) \cdot \cos\left(\delta_{anchor} - 30deg\right) = 0.671 \cdot \frac{kip}{ft}$$

$$x_{EH2.1} := t_{wall} + \frac{1}{2}\left(B_{bot.1} + B_{bot.lower.1}\right) = 5.898\,ft$$

$$y_{EH2.1} := 3.5ft - \frac{1}{2} \cdot 4ft = 1.5\,ft$$

$$EH3_{1.vert} := \frac{1}{2} k_{a.anchor} \cdot \gamma_s \cdot (4ft)^2 \cdot \sin\left(\delta_{anchor} - 30deg\right) = -0.03 \cdot \frac{kip}{ft}$$

$$EH3_{1.hor} := \frac{1}{2} k_{a.anchor} \cdot \gamma_s \cdot (4ft)^2 \cdot \cos\left(\delta_{anchor} - 30deg\right) = 0.132 \cdot \frac{kip}{ft}$$

$$x_{EH3.1} := t_{wall} + B_{bot.lower.1} + \left(3.5ft - \frac{2}{3} \cdot 4ft\right)\tan(30deg) = 5.321\,ft$$

$$y_{EH3.1} := 3.5ft - \frac{2}{3} \cdot 4ft = 10 \cdot in$$

$$LS_{hor.1} := \begin{cases} \left(k_{a.wall} \cdot q_{sur} \cdot h_{backfill.1}\right) & \text{if } d_{traffic.1} < \frac{h_{wall.1}}{2} \\ 0 & \text{otherwise} \end{cases} = 0 \cdot \frac{kip}{ft}$$

$x_{LS.hor.1} := t_{wall} + \frac{1}{2}\left(B_{bot.lower.1} + B_{bot.1}\right) = 5.898\,ft$ (Assumed for ease of calculation)

$y_{LS.hor.1} := \frac{1}{2} h_{backfill.1} = 6.856\,ft$

Check Sliding

Per AASHTO 11.11.4.2, Sliding shall be evaluated according to 10.6.3.4. Per 11.5.3, sliding shall be evaluated at the strength limit state. Use minimum load factors for vertical loads and maximum load factors for horizontal loads. Assume the failure plane is beneath the wall ftg, which will be grouted to the wall during construction. This is consistent with assumptions in the HITEC report (page D24).

Resisting Forces

$\phi_\tau := 0.9$ AASHTO Table 10.5.5.2.2-1, "Precast on Sand" or "Soil on Soil"

$$\Sigma V_1 := 0.9\left(DC_{wall.1} + DC_{anchor.1} + DC_{ftg.1}\right) + 1.0\cdot\left(EV1a_1 + EV1b_1 + EV2_1 + EV3_1 + EV4_1\right) \ldots + \eta_i\cdot 1.50\cdot\left(EH1_{1.vert} + EH2_{1.vert} + EH3_{1.vert}\right) = 14.19\cdot\frac{kip}{ft}$$

$R_{\tau.1} := 0.8\cdot\tan\left(\phi_{ftg}\right)\cdot\Sigma V_1 = 7.949\cdot\frac{kip}{ft}$ AASHTO 10.6.3.4

$$\boxed{R_{r.1} := \phi_\tau\cdot R_{\tau.1} = 7.154\cdot\frac{kip}{ft}}$$

Driving Forces

$$\Sigma H_{\tau.1} := \eta_i\cdot\left[1.50\cdot\left(EH1_{1.hor} + EH2_{1.hor} + EH3_{1.hor}\right) + 1.75LS_{hor.1}\right] = 4.951\cdot\frac{kip}{ft}$$

$$Check_{sliding.1} := \begin{cases} \text{"OK"} & \text{if } \frac{R_{r.1}}{\Sigma H_{\tau.1}} \geq 1 \\ \text{"NG"} & \text{otherwise} \end{cases} = \text{"OK"}$$

Check Overturning and Eccentricity

Per AASHTO 11.11.4.4, Overturning shall be evaluated according to 11.6.3.3. A maximum of 80% of the retained soil shall be used to resist overturning. Per 11.6.3.3, evaluate overturning and eccentricity at the strength limit state using maximum load factors for horizontal loads and minimum load factors for vertical loads. First, evaluate eccentricity at the base of the panel. Second, evaluate eccentricity at the base of the footing. The location of the resultant of the reaction forces shall be located within the middle half of the base width (panel width plus anchor projection for case 1; footing width plus anchor projection for case 2). Eccentricity is measured from the center of the base width toward the stream side of the footing. Assume that a negative eccentricity (beyond the center of the base, toward the backfill) is acceptable since this condition will engage passive earth pressures.

Resisting Forces

$$Resisting_1 := 0.9\left(DC_{wall.1}\cdot x_{DC.wall.1} + DC_{anchor.1}\cdot x_{anchor.1}\right) \ldots + 1.0\cdot 0.8\cdot\left(EV1a_1\cdot x_{EV1a.1} + EV1b_1\cdot x_{EV1b.1} + EV2_1\cdot x_{EV2.1} + EV3_1\cdot x_{EV3.1} + EV4_1\cdot x_{EV4.1}\right) \ldots + 1.50\left(EH1_{1.vert}\cdot x_{EH1.1} + EH2_{1.vert}\cdot x_{EH2.1} + EH3_{1.vert}\cdot x_{EH3.1}\right) = 43.361\cdot\frac{kip\cdot ft}{ft}$$

Driving Forces

$$Driving_1 := 1.50\cdot\left(EH1_{1.hor}\cdot y_{EH1.1} + EH2_{1.hor}\cdot y_{EH2.1} + EH3_{1.hor}\cdot y_{EH3.1}\right) + 1.75LS_{hor.1}\cdot y_{LS.hor.1} = 27.542\cdot\frac{kip\cdot ft}{ft}$$

$$Check_{OT.1} := \begin{cases} \text{"OK"} & \text{if } \frac{Resisting_1}{Driving_1} \ge 1 \\ \text{"NG"} & \text{otherwise} \end{cases} = \text{"OK"}$$

$$\Sigma V_{e.1} := 0.9\left(DC_{wall.1} + DC_{anchor.1}\right) + 1.0\cdot 0.8\cdot\left(EV1a_1 + EV1b_1 + EV2_1 + EV3_1 + EV4_1\right) \ldots + 1.50\left(EH1_{1.vert} + EH2_{1.vert} + EH3_{1.vert}\right) = 10.964\cdot\frac{kip}{ft}$$

Case 1: Eccentricity of Resultant without footing

$$l_{case1.1} := \frac{\left(Resisting_1 - Driving_1\right)}{\Sigma V_{e.1}} = 1.443\,ft$$ (Distance to resultant from face of wall)

$$B_{case1.1} := B_{bot.lower.1} + t_{wall} = 4.84\,ft$$

$$e_{case1.1} := \max\left(\frac{B_{case1.1}}{2} - l_{case1.1}, 0ft\right) = 0.977\,ft$$

$$e_{allow.case1.1} := \frac{B_{case1.1}}{4} = 1.21\,ft$$ (Within Middle Half per AASHTO 11.6.3.3)

$$Check_{e.case1.1} := \begin{cases} \text{"OK"} & \text{if } \frac{e_{case1.1}}{e_{allow.case1.1}} \le 1 \\ \text{"NG"} & \text{otherwise} \end{cases} = \text{"OK"}$$

Case 2: Eccentricity of Resultant with footing

$$l_1 := \frac{\left[\Sigma V_{e.1}\cdot\left[\frac{\left(Resisting_1 - Driving_1\right)}{\Sigma V_{e.1}} + \frac{1}{2}\left(t_{ftg} - t_{wall}\right)\right] + 0.9DC_{ftg.1}\cdot x_{DC.ftg.1}\right]}{\Sigma V_{e.1} + 0.9DC_{ftg.1}} = 2.419\,ft$$ (Distance to resultant from face of ftg)

$$B_1 := B_{bot.lower.1} + t_{wall} + \frac{1}{2}\left(t_{ftg} - t_{wall}\right) = 5.924\,ft$$

$$e_1 := \max\left(\frac{B_1}{2} - l_1, 0ft\right) = 0.543\,ft$$

$$e_{allow.1} := \frac{B_1}{4} = 1.481\,ft$$ (Within Middle Half of ftg per AASHTO 11.6.3.3)

$$Check_{e.1} := \begin{cases} \text{"OK"} & \text{if } \frac{e_1}{e_{allow.1}} \le 1 \\ \text{"NG"} & \text{otherwise} \end{cases} = \text{"OK"}$$

Check Bearing Pressure

Per 11.11.4.3 Evaluate bearing pressure with respect to resistance calculated in 10.6.3. Per HITEC p. D24, use the horizontal portion of the anchor at its base plus the footing width. Evaluate at the strength limit state. Use 100% of the weight of the retained soil. When Live Load Surcharge is present, Strength I with maximum load factors for vertical loads and horizontal loads controls. Include the effects of live load surcharge. Since lever arms are calculated from the front face of the wall, must add to the eccentricity the distance between wall and toe of footing.

$$\begin{aligned} Resisting_{brg.1} := {} & 1.25\left(DC_{wall.1}\cdot x_{DC.wall.1} + DC_{anchor.1}\cdot x_{anchor.1}\right) \ldots \\ & + 1.35\cdot\left(EV1a_1\cdot x_{EV1a.1} + EV1b_1\cdot x_{EV1b.1} + EV2_1\cdot x_{EV2.1} + EV3_1\cdot x_{EV3.1} + EV4_1\cdot x_{EV4.1}\right) \ldots \\ & + 1.35\left(EH1_{1.vert}\cdot x_{EH1.1} + EH2_{1.vert}\cdot x_{EH2.1} + EH3_{1.vert}\cdot x_{EH3.1}\right) \ldots \\ & + 1.75\cdot\left(LS_{vert.1}\cdot x_{LS.vert.1}\right) \end{aligned} = 63.92\cdot\frac{kip\cdot ft}{ft}$$

$$Driving_{brg.1} := 1.35\left(EH1_{1.hor}\cdot y_{EH1.1} + EH2_{1.hor}\cdot y_{EH2.1} + EH3_{1.hor}\cdot y_{EH3.1}\right) + 1.75LS_{hor.1}\cdot y_{LS.hor.1} = 24.787\cdot\frac{kip\cdot ft}{ft}$$

$$\begin{aligned} \Sigma V_{brg.1} := {} & 1.25\cdot\left(DC_{wall.1} + DC_{anchor.1}\right) + 1.35\cdot\left(EV1a_1 + EV1b_1 + EV2_1 + EV3_1 + EV4_1\right) \ldots \\ & + 1.35\cdot\left(EH1_{1.vert} + EH2_{1.vert} + EH3_{1.vert}\right) + 1.75\cdot\left(LS_{vert.1}\right) \end{aligned} = 16.81\cdot\frac{kip}{ft}$$

$$l_{brg.1} := \frac{\left[\Sigma V_{brg.1}\cdot\left[\frac{\left(Resisting_{brg.1} - Driving_{brg.1}\right)}{\Sigma V_{brg.1}} + \frac{1}{2}\left(t_{ftg} - t_{wall}\right)\right] + 1.25DC_{ftg.1}\cdot x_{DC.ftg.1}\right]}{\Sigma V_{brg.1} + 1.25DC_{ftg.1}} = 3.228\,ft$$ (Distance to resultant from face of ftg)

$$e_{brg.1} := \max\left(\frac{B_1}{2} - l_{brg.1}, 0ft\right) = 0\,ft$$

$$\sigma_{foot.1} := \frac{\Sigma V_{brg.1}}{B_1 - 2 \cdot e_{brg.1}} = 2.838 \cdot ksf$$

Eq. 11.6.3.2-1, Rectangular Distibution for Foundations on soil

$$q_R = 6 \cdot ksf$$

$$CheckBearing_1 := \begin{cases} \text{"OK"} & \text{if } \frac{q_R}{\sigma_{foot.1}} \geq 1 \\ \text{"NG"} & \text{otherwise} \end{cases} = \text{"OK"}$$

External Stability Analysis at Anchor 2

Calculate Vertical Loads and Associated Lever Arms ***(All Lever Arms are from Point "O")***

$$DC_{wall.2} := t_{wall} \cdot h_{wall.2} \cdot \gamma_c = 1.216 \cdot \frac{kip}{ft}$$

$$x_{DC.wall.2} := \frac{1}{2} t_{wall} = 0.417\,ft$$

$$EV1a_2 := \frac{1}{2} \gamma_s \cdot \left(h_{backfill.2} - h_{wall.2}\right) \cdot \left(d_{slope.2}\right) = 0.835 \cdot \frac{kip}{ft}$$

$$x_{EV1a.2} := t_{wall} + \frac{2}{3} d_{slope.2} = 4.248\,ft$$

$$EV1b_2 := \gamma_s \cdot \left(h_{backfill.2} - h_{wall.2}\right) \cdot \left(B_{bot.2} - d_{slope.2}\right) = 0 \cdot \frac{kip}{ft}$$

$$x_{EV1b.2} := t_{wall} + d_{slope.2} + \frac{1}{2}\left(B_{bot.2} - d_{slope.2}\right) = 5.955\,ft$$

$$EV2_2 := \gamma_s \cdot \left(h_{wall.2} - 3.5ft\right) \cdot B_{bot.2} = 4.465 \cdot \frac{kip}{ft}$$

$$x_{EV2.2} := t_{wall} + \frac{1}{2} B_{bot.2} = 3.394\,ft$$

$$EV3_2 := \gamma_s \cdot (3.5ft) \cdot \left(B_{bot.lower.2} - \frac{7in}{\cos(30deg)}\right) = 1.143 \cdot \frac{kip}{ft}$$

$$x_{EV3.2} := t_{wall} + \frac{1}{2}\left(B_{bot.lower.2} - \frac{7in}{\cos(30deg)}\right) = 2\,ft$$

$$EV4_2 := \gamma_s \cdot \frac{1}{2} \cdot 3.5ft \cdot \left[\left(W_2 + 3ft + 5.375in\right) - \left(B_{bot.lower.2} - \frac{7in}{\cos(30deg)}\right)\right] = 0.518 \cdot \frac{kip}{ft}$$

$$x_{EV4.2} := t_{wall} + B_{bot.lower.2} + \frac{1}{3} \cdot \left[W_2 + 3ft + 5.375in - \left(B_{bot.lower.2} - \frac{7in}{\cos(30deg)}\right)\right] = 4.545\,ft$$

$$DC_{anchor.2} := \frac{1}{trib_2} \cdot \begin{cases} (1740lbf) & \text{if } AnchorType_2 = \text{"B"} \\ (2010lbf) & \text{if } AnchorType_2 = \text{"C"} \\ (2285lbf) & \text{if } AnchorType_2 = \text{"D"} \\ (2550lbf) & \text{if } AnchorType_2 = \text{"E"} \end{cases} = 0.365 \cdot \frac{kip}{ft}$$

(See Anchor Geometry Drawing)

$$x_{anchor.2} := t_{wall} + \begin{cases} (2ft + 2.25in) & \text{if } AnchorType_2 = \text{"B"} \\ (2ft + 8.8125in) & \text{if } AnchorType_2 = \text{"C"} \\ (3ft + 5.125in) & \text{if } AnchorType_2 = \text{"D"} \\ (4ft + 0.0625in) & \text{if } AnchorType_2 = \text{"E"} \end{cases} = 3.568 \cdot ft$$

$$LS_{vert.2} := \begin{cases} \left[q_{sur} \cdot \left[B_{bot.2} - \left(d_{traffic.2}\right)\right]\right] & \text{if } d_{traffic.2} < B_{bot.2} \\ 0 & \text{otherwise} \end{cases} = 0 \cdot \frac{kip}{ft}$$

Used in bearing calcs only

$$x_{LS.vert.2} := t_{wall} + d_{traffic.2} + \frac{1}{2}\left(B_{bot.2} - d_{traffic.2}\right) = 15.398\,ft$$

$$DC_{ftg.2} := \gamma_c \cdot t_{ftg} \cdot h_{ftg} = 1.427 \cdot \frac{kip}{ft}$$

$$x_{DC.ftg.2} := \frac{t_{ftg}}{2} = 1.5\,ft$$

Note: This moment arm is measured from the front toe of the ftg since it is only used in bearing calculations.

Calculate Lateral Loads and Associated Lever Arms

$$EH1_{2.vert} := \frac{1}{2} k_{a.wall} \cdot \gamma_s \cdot \left(h_{backfill.2} - 3.5ft\right)^2 \cdot \sin\left(\delta_{wall}\right) = 0.836 \cdot \frac{kip}{ft}$$

$$EH1_{2.hor} := \frac{1}{2} k_{a.wall} \cdot \gamma_s \cdot \left(h_{backfill.2} - 3.5ft\right)^2 \cdot \cos\left(\delta_{wall}\right) = 1.753 \cdot \frac{kip}{ft}$$

$$x_{EH1.2} := t_{wall} + B_{bot.2} = 5.955\,ft$$

$$y_{EH1.2} := 3.5ft + \frac{1}{3}\left(h_{backfill.2} - 3.5ft\right) = 6.352\,ft$$

$$EH2_{2.vert} := k_{a.anchor} \cdot \gamma_s \cdot \left(h_{backfill.2} - 3.5ft\right) \cdot (4ft) \cdot \sin\left(\delta_{anchor} - 30deg\right) = -0.13 \cdot \frac{kip}{ft}$$

$$EH2_{2.hor} := k_{a.anchor} \cdot \gamma_s \cdot \left(h_{backfill.2} - 3.5ft\right) \cdot (4ft) \cdot \cos\left(\delta_{anchor} - 30deg\right) = 0.563 \cdot \frac{kip}{ft}$$

$$x_{EH2.2} := t_{wall} + \frac{1}{2}\left(B_{bot.2} + B_{bot.lower.2}\right) = 4.898\,ft$$

$$y_{EH2.2} := 3.5ft - \frac{1}{2} \cdot 4ft = 1.5\,ft$$

$$EH3_{2.vert} := \frac{1}{2} k_{a.anchor} \cdot \gamma_s \cdot (4ft)^2 \cdot \sin(\delta_{anchor} - 30deg) = -0.03 \cdot \frac{kip}{ft}$$

$$EH3_{2.hor} := \frac{1}{2} k_{a.anchor} \cdot \gamma_s \cdot (4ft)^2 \cdot \cos(\delta_{anchor} - 30deg) = 0.132 \cdot \frac{kip}{ft}$$

$$x_{EH3.2} := t_{wall} + B_{bot.lower.2} + \left(3.5ft - \frac{2}{3} \cdot 4ft\right) \tan(30deg) = 4.321\,ft$$

$$y_{EH3.2} := 3.5ft - \frac{2}{3} \cdot 4ft = 10 \cdot in$$

$$LS_{hor.2} := \begin{cases} (k_{a.wall} \cdot q_{sur} \cdot h_{backfill.2}) & \text{if } d_{traffic.2} < \frac{h_{wall.2}}{2} \\ 0 & \text{otherwise} \end{cases} = 0 \cdot \frac{kip}{ft}$$

$$x_{LS.hor.2} := t_{wall} + \frac{1}{2}(B_{bot.lower.2} + B_{bot.2}) = 4.898\,ft$$ (Assumed for ease of calculation)

$$y_{LS.hor.2} := \frac{1}{2} h_{backfill.2} = 6.028\,ft$$

Check Sliding

Per AASHTO 11.11.4.2, Sliding shall be evaluated according to 10.6.3.4. Per 11.5.3, sliding shall be evaluated at the strength limit state. Use minimum load factors for vertical loads and maximum load factors for horizontal loads. Assume the failure plane is beneath the wall ftg, which will be grouted to the wall during construction. This is consistent with assumptions in the HITEC report (page D24).

Resisting Forces

$$\phi_\tau := 0.9$$ AASHTO Table 10.5.5.2.2-1, "Precast on Sand" or "Soil on Soil"

$$\Sigma V_2 := 0.9(DC_{wall.2} + DC_{anchor.2} + DC_{ftg.2}) + 1.0 \cdot (EV1a_2 + EV1b_2 + EV2_2 + EV3_2 + EV4_2) \ldots + \eta_i \cdot 1.50 \cdot (EH1_{2.vert} + EH2_{2.vert} + EH3_{2.vert}) = 10.682 \cdot \frac{kip}{ft}$$

$$R_{\tau.2} := 0.8 \cdot \tan(\phi_{ftg}) \cdot \Sigma V_2 = 5.984 \cdot \frac{kip}{ft}$$ AASHTO 10.6.3.4

$$\boxed{R_{r.2} := \phi_\tau \cdot R_{\tau.2} = 5.386 \cdot \frac{kip}{ft}}$$

Driving Forces

$$\Sigma H_{\tau.2} := \eta_i \cdot \left[1.50 \cdot (EH1_{2.hor} + EH2_{2.hor} + EH3_{2.hor}) + 1.75 LS_{hor.2}\right] = 3.671 \cdot \frac{kip}{ft}$$

$$Check_{sliding.2} := \begin{cases} \text{"OK"} & \text{if } \dfrac{R_{r.2}}{\Sigma H_{\tau.2}} \geq 1 \\ \text{"NG"} & \text{otherwise} \end{cases} = \text{"OK"}$$

Check Overturning and Eccentricity

Per AASHTO 11.11.4.4, Overturning shall be evaluated according to 11.6.3.3. A maximum of 80% of the retained soil shall be used to resist overturning. Per 11.6.3.3, evaluate overturning and eccentricity at the strength limit state using maximum load factors for horizontal loads and minimum load factors for vertical loads. First, evaluate eccentricity at the base of the panel. Second, evaluate eccentricity at the base of the footing. The location of the resultant of the reaction forces shall be located within the middle half of the base width (panel width plus anchor projection for case 1; footing width plus anchor projection for case 2). Eccentricity is measured from the center of the base width toward the stream side of the footing. Assume that a negative eccentricity (beyond the center of the base, toward the backfill) is acceptable since this condition will engage passive earth pressures.

Resisting Forces

$$\begin{aligned} Resisting_2 := {} & 0.9\left(DC_{wall.2}\cdot x_{DC.wall.2} + DC_{anchor.2}\cdot x_{anchor.2}\right) \ldots \\ & + 1.0\cdot 0.8\cdot\left(EV1a_2\cdot x_{EV1a.2} + EV1b_2\cdot x_{EV1b.2} + EV2_2\cdot x_{EV2.2} + EV3_2\cdot x_{EV3.2} + EV4_2\cdot x_{EV4.2}\right) \ldots \\ & + 1.50\left(EH1_{2.vert}\cdot x_{EH1.2} + EH2_{2.vert}\cdot x_{EH2.2} + EH3_{2.vert}\cdot x_{EH3.2}\right) \end{aligned} = 26.622\cdot\frac{kip\cdot ft}{ft}$$

Driving Forces

$$Driving_2 := 1.50\cdot\left(EH1_{2.hor}\cdot y_{EH1.2} + EH2_{2.hor}\cdot y_{EH2.2} + EH3_{2.hor}\cdot y_{EH3.2}\right) + 1.75LS_{hor.2}\cdot y_{LS.hor.2} = 18.135\cdot\frac{kip\cdot ft}{ft}$$

$$Check_{OT.2} := \begin{cases} \text{"OK"} & \text{if } \dfrac{Resisting_2}{Driving_2} \geq 1 \\ \text{"NG"} & \text{otherwise} \end{cases} = \text{"OK"}$$

$$\begin{aligned} \Sigma V_{e.2} := {} & 0.9\left(DC_{wall.2} + DC_{anchor.2}\right) + 1.0\cdot 0.8\cdot\left(EV1a_2 + EV1b_2 + EV2_2 + EV3_2 + EV4_2\right) \ldots \\ & + 1.50\left(EH1_{2.vert} + EH2_{2.vert} + EH3_{2.vert}\right) \end{aligned} = 8.006\cdot\frac{kip}{ft}$$

Case 1: Eccentricity of Resultant without footing

$$l_{case1.2} := \frac{\left(Resisting_2 - Driving_2\right)}{\Sigma V_{e.2}} = 1.06\,ft$$ (Distance to resultant from face of wall)

$B_{case1.2} := B_{bot.lower.2} + t_{wall} = 3.84\,ft$

$e_{case1.2} := \max\left(\frac{B_{case1.2}}{2} - l_{case1.2}, 0ft\right) = 0.86\,ft$

$e_{allow.case1.2} := \frac{B_{case1.2}}{4} = 0.96\,ft$ (Within Middle Half per AASHTO 11.6.3.3)

$$Check_{e.case1.2} := \begin{cases} \text{"OK"} & \text{if } \frac{e_{case1.2}}{e_{allow.case1.2}} \le 1 \\ \text{"NG"} & \text{otherwise} \end{cases} = \text{"OK"}$$

Case 2: Eccentricity of Resultant with footing

$$l_2 := \frac{\left[\Sigma V_{e.2} \cdot \left[\frac{(Resisting_2 - Driving_2)}{\Sigma V_{e.2}} + \frac{1}{2}(t_{ftg} - t_{wall})\right] + 0.9DC_{ftg.2} \cdot x_{DC.ftg.2}\right]}{\Sigma V_{e.2} + 0.9DC_{ftg.2}} = 2.054\,ft$$

(Distance to resultant from face of ftg)

$B_2 := B_{bot.lower.2} + t_{wall} + \frac{1}{2}(t_{ftg} - t_{wall}) = 4.924\,ft$

$e_2 := \max\left(\frac{B_2}{2} - l_2, 0ft\right) = 0.407\,ft$

$e_{allow.2} := \frac{B_2}{4} = 1.231\,ft$ (Within Middle Half of ftg per AASHTO 11.6.3.3)

$$Check_{e.2} := \begin{cases} \text{"OK"} & \text{if } \frac{e_2}{e_{allow.2}} \le 1 \\ \text{"NG"} & \text{otherwise} \end{cases} = \text{"OK"}$$

Check Bearing Pressure

Per 11.11.4.3 Evaluate bearing pressure with respect to resistance calculated in 10.6.3. Per HITEC p. D24, use the horizontal portion of the anchor at its base plus the footing width. Evaluate at the strength limit state. Use 100% of the weight of the retained soil. When Live Load Surcharge is present, Strength I with maximum load factors for vertical loads and horizontal loads controls. Include the effects of live load surcharge. Since lever arms are calculated from the front face of the wall, must add to the eccentricity the distance between wall and toe of footing.

$$Resisting_{brg.2} := 1.25\left(DC_{wall.2}\cdot x_{DC.wall.2} + DC_{anchor.2}\cdot x_{anchor.2}\right) \ldots + 1.35\cdot\left(EV1a_2\cdot x_{EV1a.2} + EV1b_2\cdot x_{EV1b.2} + EV2_2\cdot x_{EV2.2} + EV3_2\cdot x_{EV3.2} + EV4_2\cdot x_{EV4.2}\right) \ldots + 1.35\left(EH1_{2.vert}\cdot x_{EH1.2} + EH2_{2.vert}\cdot x_{EH2.2} + EH3_{2.vert}\cdot x_{EH3.2}\right) \ldots + 1.75\cdot\left(LS_{vert.2}\cdot x_{LS.vert.2}\right) = 39.461\cdot\frac{kip\cdot ft}{ft}$$

$$Driving_{brg.2} := 1.35\left(EH1_{2.hor}\cdot y_{EH1.2} + EH2_{2.hor}\cdot y_{EH2.2} + EH3_{2.hor}\cdot y_{EH3.2}\right) + 1.75LS_{hor.2}\cdot y_{LS.hor.2} = 16.322\cdot\frac{kip\cdot ft}{ft}$$

$$\Sigma V_{brg.2} := 1.25\cdot\left(DC_{wall.2} + DC_{anchor.2}\right) + 1.35\cdot\left(EV1a_2 + EV1b_2 + EV2_2 + EV3_2 + EV4_2\right) \ldots + 1.35\cdot\left(EH1_{2.vert} + EH2_{2.vert} + EH3_{2.vert}\right) + 1.75\cdot\left(LS_{vert.2}\right) = 12.287\cdot\frac{kip}{ft}$$

$$l_{brg.2} := \frac{\left[\Sigma V_{brg.2}\cdot\left[\frac{\left(Resisting_{brg.2} - Driving_{brg.2}\right)}{\Sigma V_{brg.2}} + \frac{1}{2}\left(t_{ftg} - t_{wall}\right)\right] + 1.25DC_{ftg.2}\cdot x_{DC.ftg.2}\right]}{\Sigma V_{brg.2} + 1.25DC_{ftg.2}} = 2.781\,ft$$

(Distance to resultant from face of ftg)

$$e_{brg.2} := \max\left(\frac{B_2}{2} - l_{brg.2}, 0ft\right) = 0\,ft$$

$$\sigma_{foot.2} := \frac{\Sigma V_{brg.2}}{B_2 - 2\cdot e_{brg.2}} = 2.496\cdot ksf$$

Eq. 11.6.3.2-1, Rectangular Distibution for Foundations on soil

$$q_R = 6\cdot ksf$$

$$CheckBearing_2 := \begin{cases} \text{"OK"} & \text{if } \frac{q_R}{\sigma_{foot.2}} \geq 1 \\ \text{"NG"} & \text{otherwise} \end{cases} = \text{"OK"}$$

Check Wall Reinforcement

Assume the wall stem is cantilevered above the anchor. Use tallest wall section above anchor. Use maximum horizontal load factors to calculate moments and shears. Use minimum load factor for axial compression.

Calculate Horizontal Loads and resp. Lever Arms at top of Anchor

$$h_{wall.internal} := h_{backfill.1} - 3.5ft = 10.212\,ft$$

$$EH_{wall} := \frac{1}{2}k_{a.wall}\cdot\gamma_s\cdot h_{wall.internal}^2 = 2.767\cdot\frac{kip}{ft}$$

$$y_{EH.wall} := \frac{1}{3}h_{wall.1} = 3.643\,ft$$

$$LS_{wall} := \begin{cases} 0 & \text{if } d_{traffic.1} \geq \frac{1}{2} \cdot h_{wall.1} \\ \left(k_{a.wall} \cdot q_{sur} \cdot h_{wall.internal}\right) & \text{otherwise} \end{cases} = 0 \cdot \frac{kip}{ft} \qquad y_{LS.wall} := \frac{1}{2} h_{wall.1} = 5.465\,ft$$

$$Mu_{wall} := \eta_i \cdot \left(1.5 \cdot EH_{wall} \cdot y_{EH.wall} + 1.75 LS_{wall} \cdot y_{LS.wall}\right) = 15.122 \cdot \frac{kip \cdot ft}{ft}$$

$$Vu_{wall} := \eta_i \cdot \left(1.5 EH_{wall} + 1.75 LS_{wall}\right) = 4.151 \cdot \frac{kip}{ft}$$

$$Nu_{wall} := -\eta_i \cdot \left(0.9 \cdot \gamma_c \cdot t_{wall} \cdot h_{wall.internal}\right) = -1.149 \cdot \frac{kip}{ft}$$

Check Moment Capacity

$bar_{wall} := 6$ $\qquad s_{wall} := 10in$ $\qquad cover_{wall} := 2in$

$b_w := 1ft$

$$diam_{wall} := \frac{bar_{wall}}{8} in = 0.75 \cdot in$$

$$As_{wall} := \frac{\pi \cdot diam_{wall}^2}{4} \cdot 12 \frac{in}{s_{wall}} = 0.53 \cdot in^2$$

$$d_{wall} := t_{wall} - cover_{wall} - \frac{diam_{wall}}{2} = 7.625 \cdot in$$

$\phi_{moment} := 0.90$ Per AASHTO 5.5.4.2.1

$\phi_{shear} := 0.90$ Per AASHTO 5.5.4.2.1

Verify that f_y can be substituted for f_s in the equations of 5.7.3.2. This is allowed when $\frac{c}{d_s} \leq 0.60$.

$$c_{wall} := \frac{As_{wall} \cdot f_y}{0.85 \cdot f_c \cdot \beta_1 \cdot b_w} = 0.78 \cdot in$$

Simplified equation 5.7.3.1.2-4

$$\frac{c_{wall}}{d_{wall}} = 0.102$$

This is less than 0.60 therefore f_y can be substituted for f_s

$$a_{wall} := \beta_1 \cdot c_{wall} = 0.624 \cdot in$$

$Mn_{wall} := As_{wall} \cdot f_y \cdot \left(d_{wall} - \frac{a_{wall}}{2} \right)$

$Mr_{wall} := \phi_{moment} \cdot Mn_{wall} = 17.447 \cdot kip \cdot ft$

$Mu_{wall} \cdot b_w = 15.122 \cdot kip \cdot ft$

$$Check_{WallFlexure} := \begin{cases} \text{"OK"} & \text{if } \frac{Mr_{wall}}{Mu_{wall} \cdot b_w} \geq 1 \\ \text{"NG"} & \text{otherwise} \end{cases} = \text{"OK"}$$

Check Minimum Flexural Reinforcement (5.7.3.3.2)

$f_r := 0.24 \cdot \sqrt{f_c \cdot ksi} = 0.537 \cdot ksi$ AASHTO 5.4.2.6

$I_{g.wall} := \frac{1}{12} \cdot b_w \cdot t_{wall}^3 = 1 \times 10^3 \cdot in^4$

$y_{t.wall} := \frac{t_{wall}}{2} = 5 \cdot in$ Distance from centroid to extreme tension fibers. Conservatively ignore reinforcement.

$S_{c.wall} := \frac{I_{g.wall}}{y_{t.wall}} = 200 \cdot in^3$

$\gamma_3 := 0.67$ 0.67 = Factor for Grade 60 ASTM A615 rebar

$\gamma_1 := 1.2$ 1.2 = Factor for precast segmental structures

$M_{cr.wall} := \gamma_3 \cdot \gamma_1 \cdot S_{c.wall} \cdot f_r = 7.191 \cdot kip \cdot ft$ Simplified AASHTO Eq 5.7.3.3.2-1

$1.33 Mu_{wall} \cdot b_w = 20.113 \cdot kip \cdot ft$

$$Check_{MinSteelWall} := \begin{cases} \text{"OK"} & \text{if } Mr_{wall} \geq \min\left(1.33 Mu_{wall} \cdot b_w, M_{cr.wall}\right) \\ \text{"NG"} & \text{otherwise} \end{cases} = \text{"OK"}$$

Shear Resistance at Bottom of Wall (Section 5.8.3.4.2)

The section contains less than the minimum transverse reinforcement specified in 5.8.2.5, therefore use equation 5.8.3.4.2-2 to determine the longitudinal strain effect factor (β) at the location of maximum shear.

$Mu := \max\left(Mu_{wall}, Vu_{wall} \cdot d_{wall}\right)$ In the eqtn below Mu shall not be less than $Vu \cdot d_v$

$$\xi_{s_wall} := \frac{\frac{|Mu|}{d_{wall}} + 0.5Nu_{wall} + |Vu_{wall}|}{E_s \cdot As_{wall}} \cdot b_w \qquad 1000 \cdot \xi_{s_wall} = 1.78 \qquad (5.8.3.4.2\text{-}4)$$

$$s_{x_wall} := d_{wall}$$

$$s_{xe_wall} := s_{x_wall} \cdot \frac{1.38in}{Aggregate_{diam} + 0.63in} = 7.625 \cdot in \qquad (5.8.3.4.2\text{-}5)$$

$$\beta_{wall} := \left(\frac{4.8}{1 + 750 \cdot \xi_{s_wall}}\right) \cdot \left(\frac{51}{39 + \frac{s_{xe_wall}}{1in}}\right) = 2.248 \qquad (5.8.3.4.2\text{-}2)$$

$$\Theta_{wall} := 29deg + 3500deg \cdot \xi_{s_wall} = 35.232 \cdot deg \qquad (5.8.3.4.2\text{-}3)$$

$$Vn_{wall} := \min\left(0.25 \cdot f_c \cdot b_w \cdot d_{wall}, 0.0316 \cdot \beta_{wall} \cdot \sqrt{f_c \cdot ksi} \cdot b_w \cdot d_{wall}\right) = 14.535 \cdot kip \qquad (5.8.3.3)$$

$$Vr_{wall} := \phi_{shear} \cdot Vn_{wall} = 13.081 \cdot kip$$

$$Vu_{wall} \cdot b_w = 4.151 \cdot kip \qquad Check_{WallShear} := \begin{cases} \text{"OK"} & \text{if } \frac{Vr_{wall}}{Vu_{wall} \cdot b_w} \geq 1 \\ \text{"NG"} & \text{otherwise} \end{cases} = \text{"OK"}$$

Check Crack Control in Section 5.7.3.4

Stress in reinforcement calculated per MacGregor "Reinforced Concrete Mechanics and Design" 4th Ed

$$Ms_{wall} := \eta_i \cdot \left(1.0 \cdot EH_{wall} \cdot y_{EH.wall} + 1.0LS_{wall} \cdot y_{LS.wall}\right) = 10.082 \cdot \frac{kip \cdot ft}{ft}$$

$$Ns_{wall} := -\eta_i \cdot \left(1.0 \cdot \gamma_c \cdot t_{wall} \cdot h_{wall.internal}\right) = -1.276 \cdot \frac{kip}{ft}$$

$$\eta := \frac{E_s}{E_c} = 7.118$$

$$\rho_{wall} := \frac{As_{wall}}{b_w \cdot d_{wall}} = 0.006$$

$$k := \sqrt{2\rho_{wall} + \left(\rho_{wall} \cdot \eta\right)^2} - \rho_{wall} \cdot \eta$$

$$j_{wall} := 1 - \frac{k}{3} = 0.975$$

$$fss_{wall} := \frac{Ms_{wall} + Ns_{wall} \cdot \left(d_{wall} - \frac{t_{wall}}{2}\right)}{As_{wall} \cdot j_{wall} \cdot d_{wall}} = 29.835 \cdot \frac{ksi}{ft}$$

Stress in Reinforcement at Service Limit State

$$d_{c_wall} := t_{wall} - d_{wall} = 2.375 \cdot in$$

$$\beta_s := 1 + \frac{d_{c_wall}}{0.7 \cdot \left(t_{wall} - d_{c_wall}\right)} = 1.445$$

$$\gamma_e := 1.00$$

exposure factor

$$s_{max} := \frac{700 \frac{kip}{in} \cdot \gamma_e}{\beta_s \cdot fss_{wall} \cdot b_w} - 2 \cdot d_{c_wall} = 11.487 \cdot in$$

$$Check_{MaxSpacing} := \begin{cases} \text{"OK"} & \text{if } s_{wall} \le s_{max} \\ \text{"NG"} & \text{otherwise} \end{cases} = \text{"OK"}$$

Check Minimum Bar Spacing in Section 5.10.3.1.2:

$$s_{min} := \max\left(diam_{wall}, 1.33 Aggregate_{diam}, 1in\right) = 1 \cdot in$$

$$Check_{MinSpacing} := \begin{cases} \text{"OK"} & \text{if } s_{wall} \ge s_{min} \\ \text{"NG"} & \text{otherwise} \end{cases} = \text{"OK"}$$

Check Maximum Bar Spacing in Section 5.10.3.2:

$$s_{max} := \min\left(1.5 \cdot t_{wall}, 18in\right) = 15 \cdot in$$

$$Check_{MaxSpacing} := \begin{cases} \text{"OK"} & \text{if } s_{wall} \le s_{max} \\ \text{"NG"} & \text{otherwise} \end{cases} = \text{"OK"}$$

Check Anchor Attachment to Wall

Check Moment Capacity of Connection Bars

Conservatively assume the entire wall is cantilevered about the footing, therefore consider only driving moments. Use total loads instead of loads per foot. Use 100% of soil weight. Must determine controlling anchor, since tributary width is variable, not necessarily the anchor at the tallest wall. Assume only top four connection bars resist tension. This assumption is consistent with HITEC p.D28.

$$Mu_{anchor} := \max\left(Driving_{brg.1} \cdot trib_1, Driving_{brg.2} \cdot trib_2\right) = 111.543 \cdot kip \cdot ft$$

$$bar_{anchor} := 5$$

size of bar

$$diam_{anchor} := \frac{bar_{anchor}}{8} in = 0.625 \cdot in$$

$As_{anchor} := \frac{\pi}{4} \cdot diam_{anchor}^2 = 0.307 \cdot in^2$

$n := 6$ Number of bars in tension

$b_{anchor} := t_{stem} = 6 \cdot in$ thickness of anchor stem

$h_{stem} := 3ft + 6in$ height of anchor stem

$d_{anchor} := 30.5in$ distance from centroid of tension reinforcement extreme compression fiber.

Verify that f_y can be substituted for f_s in the equations of 5.7.3.2. This is allowed when $\frac{c}{d_s} \le 0.60$.

$c_{anchor} := \frac{n \cdot As_{anchor} \cdot f_y}{0.85 \cdot f_c \cdot \beta_1 \cdot b_{anchor}} = 5.414 \cdot in$ Simplified equation 5.7.3.1.2-4

$\frac{c_{anchor}}{d_{anchor}} = 0.178$ **This is less than 0.60 therefore f_y can be substituted for f_s**

$a_{anchor} := \beta_1 \cdot c_{anchor} = 4.331 \cdot in$

$Mn_{anchor} := n \cdot As_{anchor} \cdot f_y \cdot \left(d_{anchor} - \frac{a_{anchor}}{2} \right)$

$Mr_{anchor} := \phi_{moment} \cdot Mn_{anchor} = 234.708 \cdot kip \cdot ft$

$Mu_{anchor} = 111.543 \cdot kip \cdot ft$

$$Check_{AnchorFlexure} := \begin{cases} \text{"OK"} & \text{if } \frac{Mr_{anchor}}{Mu_{anchor}} \ge 1 \\ \text{"NG"} & \text{otherwise} \end{cases} = \text{"OK"}$$

Check Minimum Flexural Reinforcement (5.7.3.3.2)

$f_r = 0.537 \cdot ksi$ AASHTO 5.4.2.6

$I_{g.anchor} := \frac{1}{12} \cdot t_{stem} \cdot h_{stem}^3 = 3.704 \times 10^4 \cdot in^4$

$y_{t.anchor} := \frac{h_{stem}}{2} = 1.75\,ft$ Distance from centroid to extreme tension fibers. Conservatively ignore reinforcement.

$S_{c.anchor} := \frac{I_{g.anchor}}{y_{t.anchor}} = 1.764 \times 10^3 \cdot in^3$

$\gamma_3 := 0.67$ 0.67 = Factor for Grade 60 ASTM A615 rebar

$\gamma_1 := 1.2$ 1.2 = Factor for precast segmental structures

$M_{cr.anchor} := \gamma_3 \cdot \gamma_1 \cdot S_{c.anchor} \cdot f_r = 63.426 \cdot kip \cdot ft$ Simplified AASHTO Eq 5.7.3.3.2-1

$1.33Mu_{anchor} \cdot b_w = 148.352\ ft \cdot kip \cdot ft$

$$Check_{MinSteelAnchor} := \begin{cases} \text{"OK"} & \text{if } Mr_{anchor} \geq \min(1.33Mu_{anchor}, M_{cr.anchor}) \\ \text{"NG"} & \text{otherwise} \end{cases} = \text{"OK"}$$

Check Minimum Steel for Temperature and Shrinkage (11.6.1.5.1 & 5.10.8)

$$As_{min.anchor} := \max\left[0.11 \frac{in^2}{ft}, \min\left[0.60 \frac{in^2}{ft}, \frac{1.30 \cdot b_{anchor} \cdot h_{stem}}{2 \cdot (b_{anchor} + h_{stem}) \cdot \frac{f_y}{ksi}}\right]\right] = 0.6 \cdot \frac{in^2}{ft}$$

$As_{min.anchor} \cdot h_{stem} = 2.1 \cdot in^2$

$As_{anchor} \cdot (n + 2) = 2.454 \cdot in^2$ Account for extra two bars in compression face

Check Hook Development of Connection Steel in Wall

Per 5.10.2, A standard hook with a 180 degree bend shall have a 4*db extension, but not less than 2.5 inches. Per 5.12.3, Cover beyond free end of bar shall be 2 inches.

$$l_{hb} := \frac{38.0 diam_{anchor}}{\sqrt{\left(\frac{f_c}{ksi}\right)}} = 10.621 \cdot in$$

Basic development length for a Grade 60 bar with a standard hook (AASHTO 5.11.2.4.1)

Modification Factors to be applied to the Basic Development Length (AASHTO 5.11.2.4.2)

$M_{strength} := 1$ Increase by fy/60 for yield strength greater than 60ksi

$M_{cover} := 0.7$ — 0.7 if side cover normal to plane of hook is at least 2.5 inches AND Cover beyond hook is at least 2.0in

$M_{stirrups} := 1.0$ — 0.8 if hook is enclose in with ties or stirrups as specified in 5.11.2.4.2

$M_{As} := 1.0$ — Conservatively assume entire area of steel provided is required.

$M_{lightweight} := 1.0$ — 1.3 if lightweight concrete is used.

$M_{epoxy} := 1.0$ — 1.2 if epoxy rebar is used.

$$M := M_{strength} \cdot M_{cover} \cdot M_{stirrups} \cdot M_{As} \cdot M_{lightweight} \cdot M_{epoxy} = 0.7$$

$$l_{dh} := \max(6in, 8 \cdot diam_{anchor}, M \cdot l_{hb}) = 7.435 \cdot in$$

$$t_{wall.min} := cover_{wall} + l_{dh} = 9.435 \cdot in$$

$$Check_{Wall.Thickness} := \begin{cases} \text{"OK"} & \text{if } t_{wall} \geq t_{wall.min} \\ \text{"NG"} & \text{otherwise} \end{cases} = \text{"OK"}$$

Lifting Capacity Checks - Bridge #47, Winhall VT

Case 1 - "5 Ton Utility Anchor, 2 Pick Points"

Note: Case 1 covers cutoff walls and wingwall footings.

$SWL_{case1} := 10kip$ — Safe working load of a "Oxford A750-7", i.e. 5-ton utility anchor, at 60deg sling angle, 4:1 SF

$n_{case1} := 2$ — Number of anchors used in controlling condition

$W_{case1} := 20.7kip$ — Weight of heaviest pick, WW2

$$\frac{SWL_{case1} \cdot n_{case1}}{W_{case1}} = 0.966$$

$$\begin{cases} \text{"OK"} & \text{if } \frac{SWL_{case1} \cdot n_{case1}}{W_{case1}} \geq 1 \\ \text{"NG"} & \text{otherwise} \end{cases} = \text{"NG"}$$

$$\frac{4 \cdot SWL_{case1} \cdot n_{case1}}{W_{case1}} = 3.9$$

Safety factor reduced from 4.0 to 3.9, say OK

Case 2 - "RL-24 4T Plate Anchor, 2 Pick Points"

Note: Case 2 covers box culvert top slabs when stripping.

$SWL_{case2} := 8kip = 8 \cdot kip$ — Safe working load of a "Meadow Burke RL-24 4T x 3.5" Plate Anchor, straight pick from overhead crane, 4:1 SF

$n_{case2} := 2$ — Number of anchors used in controlling condition

$W_{case2} := 14.87kip$ — Weight of heaviest pick, TS2 box culvert top slab

$$\frac{SWL_{case2} \cdot n_{case2}}{W_{case2}} = 1.076$$

$$\begin{cases} \text{"OK"} & \text{if } \frac{SWL_{case2} \cdot n_{case2}}{W_{case2}} \geq 1 \\ \text{"NG"} & \text{otherwise} \end{cases} = \text{"OK"}$$

Case 3 - "RL-24 4T Plate Anchor, 4 Pick Points"

Note: Case 3 covers box culvert base sections when stripping, base sections when setting in field, and top slabs when setting in field.

$SWL_{case3} := 8kip \cdot \sin(60deg) = 6.928 \cdot kip$ — Safe working load of a "Meadow Burke RL-24 4T x 3.5" Plate Anchor, 60 degree sling angle, 4:1 SF

$n_{case3} := 4$ — Number of anchors used in controlling condition

$W_{case3} := 23.22kip$ — Weight of heaviest pick, BC2 box culvert base sections with baffle

$$\frac{SWL_{case3} \cdot n_{case3}}{W_{case3}} = 1.193$$

$$\begin{cases} \text{"OK"} & \text{if } \frac{SWL_{case3} \cdot n_{case3}}{W_{case3}} \geq 1 \\ \text{"NG"} & \text{otherwise} \end{cases} = \text{"OK"}$$

Case 4 - "RL-24 8T Plate Anchor, 2 Pick Points"

Note: Case 4 covers wingwalls when setting in field.

$SWL_{case4} := 16kip \cdot \sin(60deg) = 13.856 \cdot kip$ — Safe working load of a "Meadow Burke RL-24 8T x 7.25" Plate Anchor, 60 degree sling angle, 4:1 SF

$n_{case4} := 2$ — Number of anchors used in controlling condition

$W_{case4} := 24.36kip$ — Weight of heaviest pick, WW3

$$\frac{SWL_{case4} \cdot n_{case4}}{W_{case4}} = 1.138$$

$$\begin{cases} \text{"OK"} & \text{if } \frac{SWL_{case4} \cdot n_{case4}}{W_{case4}} \geq 1 \\ \text{"NG"} & \text{otherwise} \end{cases} = \text{"OK"}$$

OXFORD Industrial Technologies, LLC

PO Box 736 ▪ Stevenson, CT 06491
www.oxfordtechusa.com
Phone: (203) 268-6030
Fax: (203) 445-1240
info@oxfordtechusa.com

Oxford Lift System®

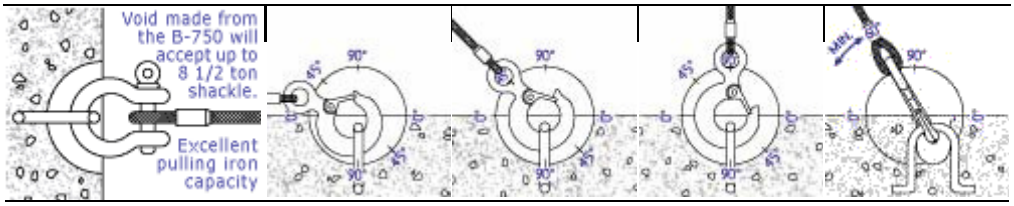

Anchor Product Code	Slab Min. Inches	Safe Working Load @ 90 degree Shear-0 degree Pull	Safe Working Load @ 90 degree Shear-45 degree Pull	Safe Working Load @ 90 degree Tension-90 degree Pull	Safe Working Load @ 90 degree Shear-60 degree Pull
A 500-3	4.00"	4,500	4,000	3,500	4,000
A 500-4	5.00"	8,000	5,500	4,000	5,000
A 500-5	6.00"	10,500	6,500	5,000	5,500
A 750-5	6.00"	12,500	8,000	7,000	7,000
A 750-7	8.00"	15,000	12,500	10,000	10,000

Note: Safe Working Load provides a factor of safety of approximately 4:1
Test Results are based on a minimum concrete compressive strength of 4,000 psi.

<back next>

Home | B-500 & B-750 | S-150 | S-300 | Lift Anchor & Order Form | Concrete Products
Pull Iron Capacity | Anchors & Accessories | Toggle-Lok | Insert/Lift Anchor | Grid-Lok/ Rebar Chair | Helpful Calculations COMING SOON!

Delta 2015.059.012 Chk: RJA

OXFORD Industrial Technologies, LLC

PO Box 736 ▪ Stevenson, CT 06491
www.oxfordtechusa.com
Phone: (203) 268-6030
Fax: (203) 445-1240
info@oxfordtechusa.com

Oxford Lift System®

Anchors & Accessories

Anchor	Product Code	A	B	C	D	Unit Weight
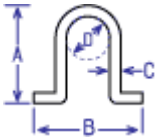	**A 500-3**	3.00"	6.25"	(1/2") .500"	2.00"	.625 lbs.
	A 500-4	4.00"	6.25"	(1/2") .500"	2.00"	.75 lbs.
	A 500-5	5.00"	6.25"	(1/2") .500"	2.00"	.775 lbs.
	A 750-5	4.75"	7.50"	(3/4") .750"	3.00"	1.75 lbs.
	A 750-7	6.75"	7.50"	(3/4") .750"	3.00"	2.00 lbs.
Block Out	Product Code	A	B	C	D	Unit Weight
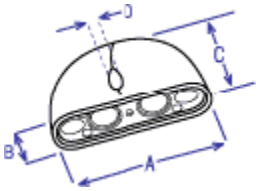	**B 500**	7.00"	2.00"	3.00"	(1/2") .500"	1.10 lbs.
	Void Dimensions Shown without Anchor					
	B 750	8.00"	3.00"	4.00"	(3/4") .750"	3.50 lbs.
	Void Dimensions Shown without Anchor					
Mounting Plate	Product Code	A	B	C	D	Unit Weight
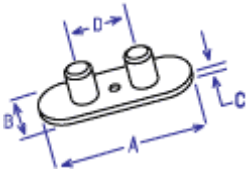	**SMP 500** (Snap-On Mounting Plate)	6.50"	1.50"	(3/8") .375"	2.25"	7.95 lbs.
	MMP 500 (Magnetic Mounting	6.50"	1.50"	(3/8") .375"	2.25"	.900 lbs.

Delta 2015.059.012 Chk: RJA

	Plate)					
	SMP 750 (Snap-On Mounting Plate)	7.25"	2.25"	(3/8") .375"	2.25"	1.75 lbs.
	MMP 750 (Magnetic Mounting Plate)	7.25"	2.25"	(3/8") .375"	2.25"	2.00 lbs.
Original Sink-It	Product Code	A	B	C	D	Unit Weight
	S 150	6.00"	1.50"	2.50"	6.75"	1.50 lbs.

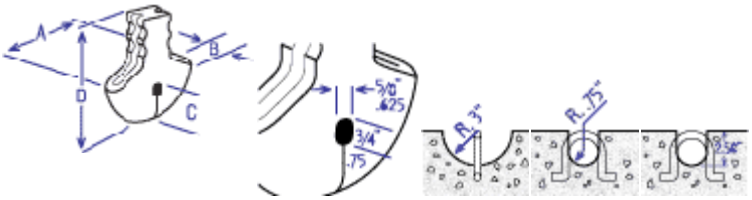

S-300 Sink-It	Product Code	A	B	C	D	Unit Weight
	S 300	8.00"	3.00"	3.50"	8.00"	4.00 lbs.

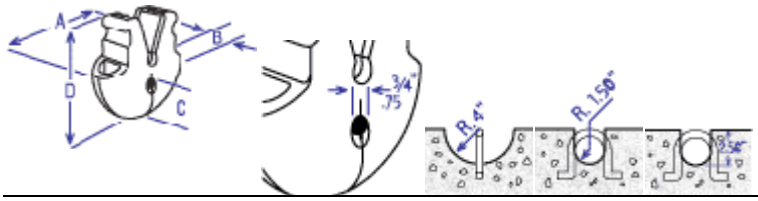

<back next>

Home | B-500 & B-750 | S-150 | S-300 | Lift Anchor & Order Form | Concrete Products
Pull Iron Capacity | Anchors & Accessories | Toggle-Lok | Insert/Lift Anchor | Grid-Lok/ Rebar Chair | Helpful Calculations COMING SOON!

Delta 2015.059.012 Chk: RJA

Rapid Lift System Anchors

(6060) RL-24 PLATE ANCHOR
2-Ton, 4-Ton and 8-Ton

The RL-24 Plate Anchor is designed with a plate welded to the bottom to provide high pullout strength with a low profile. This design makes the anchor ideal for face and back lifts of thin-wall units and stripping, handling and erection applications. The Plate Anchor is available in the sizes shown in the table and in plain or hot dip galvanize finish.

See Ring clutches on page 46, 47, and 48, and the Recessing Members on page 49, 50 and 53.

Reinforcing Recommendation:
Crisscross the lower plate of the anchor with four (4) 18" long #4 rebar as shown in the sketch.

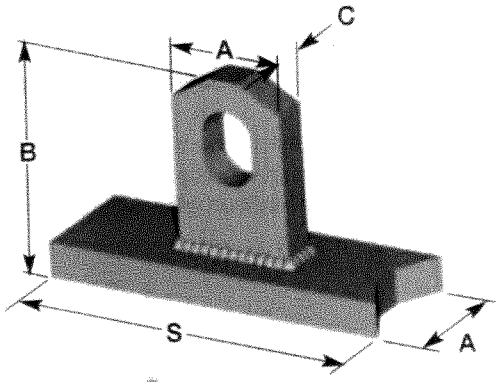

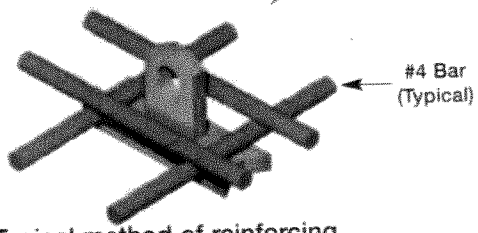

Typical method of reinforcing Plate Anchors

36 **NOTE:** The Plate Anchor has allowable face shear loads that are equal to or greater than the face tension loads for anchors located in a panel or concrete unit at a distance of at least 3B+A from the edges.

RL-24 RAPID LIFT PLATE ANCHOR DATA

Ring Clutch System	Clutch I.D.	Item Number	A	B	C	S	Allowable Unreinforced Tension Load 4:1 SF (lbs)	Allowable Reinforced Tension Load 4:1 SF (lbs)	Ultimate Mechanical Load Tension (lbs)	Weight Per Piece (lbs)
2T/2.5T	2.5T	79128	1 1/4"	2 1/4"	3/8"	3 3/4"	952	4,000	16,000	0.71
4T/5T	5T	45846[3]	1 1/2"	3"	5/8"	3"	3,574	8,000	32,000	1.21
4T/5T	5T	45847[3]	1 1/2"	3 1/2"	5/8"	3"	4,700	8,000	32,000	1.31
4T/5T	5T	79044	1 1/2"	4 3/8"	5/8"	3 7/8"	4,732	8,000	32,000	1.91
8T/10T	10T	79054	2 1/2"	6 1/4"	3/4"	5"	6,350	12,000	64,000	4.29
8T/10T	10T	79043	–	7 1/8"	Discontinued: See Plate Anchor Item 79042					
8T/10T	10T	79042	2 1/2"	7 1/8"	3/4"	5"	10,000	16,000	64,000	5.55

1) Table is based on dead load only, 150 PCF and a standard concrete compressive strength of 3,500 psi and a minimum edge distance of (3B+A)/2.
2) Tension values shown are based on 3,000 psi standard weight concrete, a minimum edge distance of 10" and #4 rebar cut to 18" lengths reinforcing the anchor as shown in the sketch.
3) Available with plate anchor base.

To Order, Specify: quantity, name, item number and finish.

(6190) RL-60 PLATE ANCHOR BASE
4-Ton

The RL-60 Plate Anchor Base is a plastic base designed for use with specific RL-24 Plate Anchor 4-Ton units (item numbers 45846 and 45847) to hold and position the anchors in face lift applications.

To Order, Specify: quantity, name and item number.

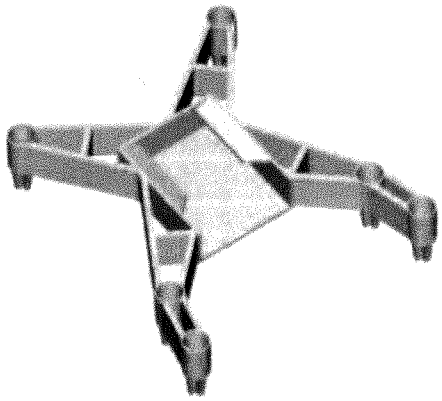

Delta 2015.059.012 Chk: RJA