Delta 2015.059.012

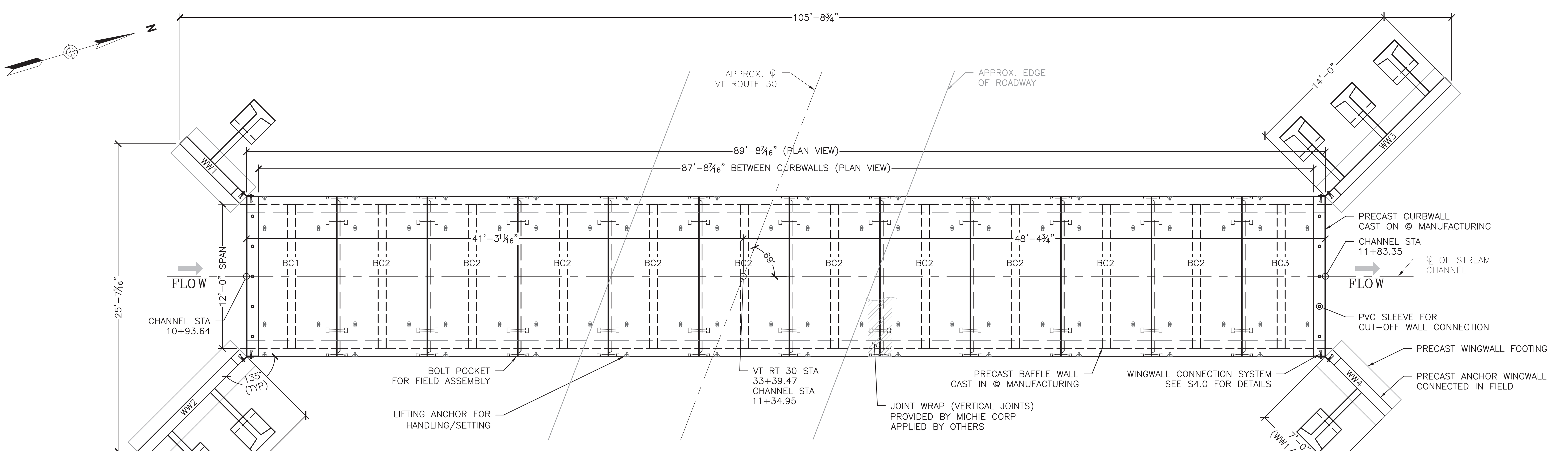

1 / S1.0 LAYOUT PLAN VIEW
3/16" = 1'–0"

Vermont Agency of Transportation
Winhall STP CULV (31) BR47 Precast Reviewed 05.06.15.pdf

RECEIVED
ON: April 21, 2015
and Checked for
CONFORMANCE
BY: Mark Sargent DATE: 5/7/2015

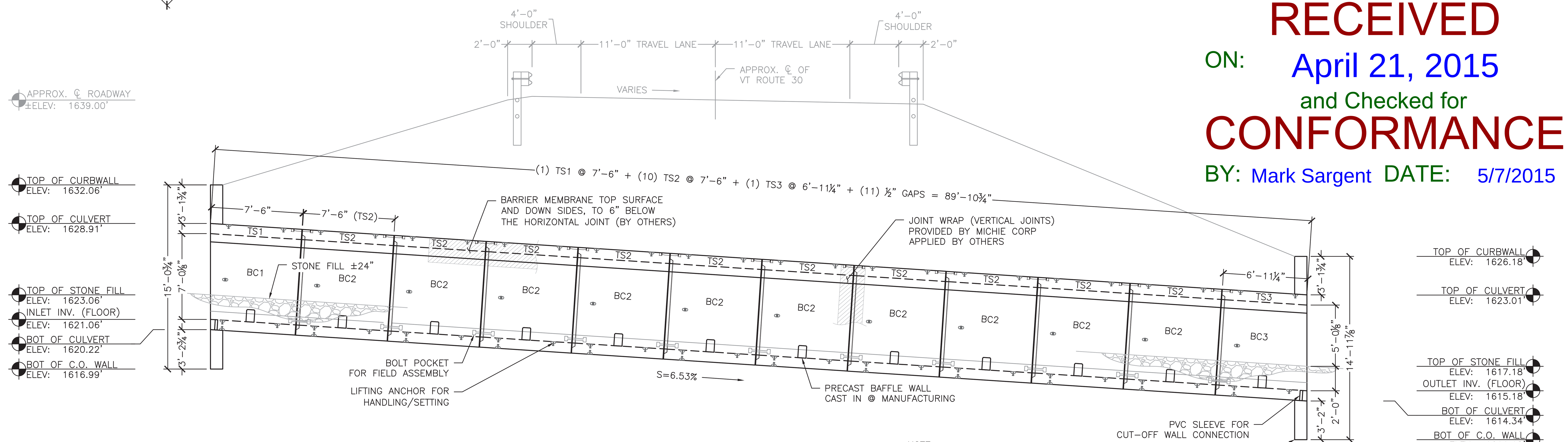

2 / S1.0 PROFILE VIEW
3/16" = 1'–0"

NOTE:
WINGWALLS NOT SHOWN IN THIS VIEW FOR CLARITY

BILL OF MATERIALS

QTY	DESCRIPTION	IN STOCK	ORDERED FROM
	ITEMS CAST-IN		
148	RL-24 4TON X 3.5" PLATE ANCHORS		
16	1-8NC 6X6 DOUBLE WW ANCHORS		
12	5-TON UTILITY ANCHORS		
15	RL24 8TON PLATE ANCHOR (7.25")		
10LF	2.5" DIA PVC SLEEVES (C.O. WALL)		
	ITEMS FOR PRESHIPPING/PREP.		
650LF	1" CLOSED CELL NEOPRENE (25LF/ROLL)		
3 GAL	RED ADHESIVE (PRESS-SEAL 1-326)		
	ITEMS TO SHIP TO THE JOB		
20	4"X4"X.25" PLASTIC SHIMS		
330LF	ROYSTON 24" JOINT WRAP (50LF/ROLL)		
7 GAL	ROYSTON 740 ADHESIVE PRIMER (1 GAL/ROLL)		
44	7/8" X 18" GALV. THREADED ROD W/ 2 NUTS, 4 WASHERS		
8	135 DEG (3/4"T X 10" X 14") GALV. WW PLATES W/ HARDWARE		
10	#6 X 14" DOWEL BARS		

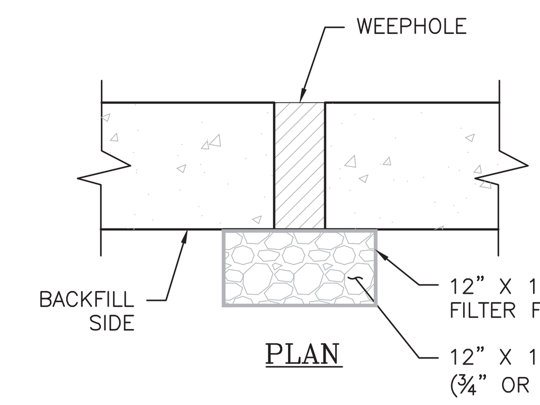

3 / S1.0 WEEPHOLE BACKFILL DETAIL
1" = 1'–0"

REVIEWED	x	Stantec
REVIEWED AS MODIFIED		
REVISE AND RESUBMIT		
NOT REVIEWED		

Date: 5/6/15

By: Michael J Chenette

This review by Stantec Consulting Services Inc. is for the sole purpose of ascertaining conformance with the general design concept. This review shall not mean that Stantec Consulting Services Inc approves the detail design inherent in the shop drawings, responsibility for which shall remain with the Contractor. Submitting same, and such review shall not relieve the Contractor of his responsibility for errors or omissions in the shop drawing or of his responsibility for meeting all requirements of the Contract Documents. The contractor is responsible for dimensions to be confirmed and correlated at the job site, for information that pertains solely to the fabrication processes or to techniques of construction and installation and for coordination of the work of all subtrades.

GENERAL NOTES:

1. THE PLANS ARE INTENDED TO BE DRAWN TO SCALE. HOWEVER, IF A CRITICAL DIMENSION IS NOT PROVIDED, MICHIE CORPORATION SHOULD BE CONTACTED FOR VERIFICATION.

2. IF ANY OF THE WORK TO BE DONE AS SHOWN ON THE DRAWINGS DOES NOT CORRESPOND WITH THE EXISTING FIELD CONDITIONS, CONTACT THE ENGINEER PRIOR TO PROCEEDING WITH THE WORK IN QUESTION.

3. FIELD–VERIFY ALL ELEVATIONS PRIOR TO THE START OF CONSTRUCTION. IF THERE ARE ANY DISCREPANCIES, CONSULT THE ENGINEER PRIOR TO PROCEEDING WITH THE WORK IN QUESTION.

4. MAINTAIN MINIMUM 60 DEGREE SLING ANGLE WHEN HANDLING PRECAST COMPONENTS.

5. PRECAST COMPONENTS SHALL REACH A MINIMUM COMPRESSIVE STRENGTH OF 3,000 PSI PRIOR TO STRIPPING, AND THE MINIMUM DESIGN COMPRESSIVE STRENGTH PRIOR TO SHIPPING, UNLESS OTHERWISE DIRECTED BY THE ENGINEER.

6. ALL JOINTS AND VOIDS SHALL BE FILLED WITH NON–SHRINK GROUT. VERTICAL SURFACE VOIDS MAY BE FILLED WITH FOAM SEALANT.

7. SHOP DRAWINGS WERE DEVELOPED USING THE FOLLOWING RESOURCES FOR THE CONTRACT:
- "PROPOSED IMPROVEMENT BRIDGE PROJECT, TOWN OF WINHALL, VT ROUTE 30, BRIDGE NUMBERS 47 AND 52", PAGES 1–60 OF 60, PREPARED BY STANTEC CONSULTING SERVICES, INC. OF SOUTH BURLINGTON, VT. DATED 9/25/2014 WITH NO REVISION DATE.

8. IF THERE IS ADDITIONAL INFORMATION PERTINENT TO THE FABRICATION AND INSTALLATION OF THESE UNITS THAT IS NOT CONTAINED WITHIN THE RESOURCES LISTED ABOVE IT SHALL BE BROUGHT TO THE ATTENTION OF MICHIE CORPORATION. FAILURE TO MAKE SUCH ADDITIONAL INFORMATION AVAILABLE SHALL RELIEVE MICHIE CORPORATION OF ALL LIABILITIES ARISING FROM ERRORS OR OMISSIONS RELATED TO THE OMITTED INFORMATION.

PRECAST CONCRETE FOOTING NOTES:

3. FOOTING CONCRETE SHALL BE SELF–CONSOLIDATING CONFORMING TO ASTM C260 WITH A MINIMUM 28–DAY COMPRESSIVE STRENGTH OF 4,000 PSI. AGGREGATE SHALL CONFORM TO ASTM C–33 WITH A MAXIMUM DIAMETER OF 3/4". CEMENT SHALL CONFORM TO ASTM C150.

4. REINFORCING SHALL BE GRADE 60 DEFORMED BLACK BARS CONFORMING TO ASTM A–615. ALL BARS SHALL BE BENT COLD.

5. ALL EXPOSED EDGES EXCEPT WHERE NOTED SHALL BE CHAMFERED 3/4".

6. SUBGRADE PREPARATION FOR WINGWALL FOOTINGS SHALL CONFORM TO VTRANS 204.07 BEDDING FOR STRUCTURES. FOOTINGS SHALL BE PLACED AT ELEVATIONS SHOWN ON A MINIMUM OF 1'–0" OF CRUSHED STONE CONFORMING TO VTRANS 704.05(A). ALL TOPSOIL, LOOSE FILL, AND DELETERIOUS MATERIALS SHALL BE REMOVED BEFORE PLACING BACKFILL. SUBGRADE PREPARATION FOR CUT–OFF WALLS PER DETAIL ON SHEET 16 OF THE CONTRACT PLANS.

BOX CULVERT NOTES:

1. BOX CULVERT SECTIONS ARE DESIGNED IN ACCORDANCE WITH
- AASHTO "LRFD BRIDGE DESIGN SPECIFICATIONS", 6TH EDITION.
- VTRANS 2011 "STANDARD SPECIFICATIONS FOR CONSTRUCTION".

2. THE FOLLOWING CRITERIA WAS USED FOR DESIGN:
- LIVE LOAD: N/A (DEPTH OF FILL)
- EARTH COVER: 13 FEET
- BACKFILL SOIL UNIT WEIGHT: 140 PCF
- BACKFILL SOIL FRICTION ANGLE: 34 DEGREES
- CONCRETE STRENGTH: 5,000 PSI
- STEEL YIELD STRENGTH: 60,000 PSI

3. BOX CULVERT AND CURBWALL CONCRETE SHALL BE SELF–CONSOLIDATING CONFORMING TO ASTM C260 WITH A MINIMUM 28–DAY COMPRESSIVE STRENGTH OF 5,000 PSI. AGGREGATE SHALL CONFORM TO ASTM C–33 WITH A MAXIMUM DIAMETER OF 3/4". CEMENT SHALL CONFORM TO ASTM C150.

4. REINFORCING SHALL BE GRADE 60 DEFORMED BLACK BARS CONFORMING TO ASTM A–615. ALL BARS SHALL BE BENT COLD.

5. ALL EXPOSED EDGES EXCEPT WHERE NOTED SHALL BE CHAMFERED 3/4".

6. SUBGRADE PREPARATION SHALL CONFORM TO VTRANS 204.07 BEDDING FOR STRUCTURES. FOOTINGS SHALL BE PLACED AT ELEVATIONS SHOWN ON A MINIMUM OF 1'–0" OF CRUSHED STONE CONFORMING TO VTRANS 704.05(A). ALL TOPSOIL, LOOSE FILL, AND DELETERIOUS MATERIALS SHALL BE REMOVED BEFORE PLACING MATERIAL.

7. BACKFILL MATERIAL SHALL CONFORM TO VTRANS SECTION 704.08 GRANULAR BACKFILL FOR STRUCTURES. BACKFILL SHALL EXTEND FOR A MINIMUM DISTANCE OF 3'–0" BEYOND THE HORIZONTAL LIMITS OF THE STRUCTURE. PLACEMENT SHALL CONFORM TO VTRANS SECTION 204.08.

8. EXPOSED SURFACES SHOULD BE COATED WITH VTRANS APPROVED WATER REPELLENT (SUPPLIED BY OTHERS).

9. EACH SECTION SHALL BE PROVIDED WITH BOLT POCKETS FOR ATTACHMENT TO ADJACENT SECTIONS. 7/8" DIA. GALV. THREADED ROD, WASHERS AND NUTS SHALL BE PROVIDED FOR ASSEMBLY IN THE FIELD. CLOSED–CELL NEOPRENE JOINT SEALANT SHALL BE USED IN ALL JOINTS UNLESS NOTED OTHERWISE.

10. 2FT WIDE ROYSTON JOINT WRAP WITH ADHESIVE PROVIDED BY MICHIE CORP, INSTALLED BY OTHERS, CENTER ON JOINT AFTER GROUTING. BARRIER MEMBRANE PROVIDED AND INSTALLED BY OTHERS OVER TOP OF STRUCTURE, AND DOWN SIDES TO 6" BELOW HORIZONTAL JOINT.

WING WALL NOTES:

1. SECTIONS ARE DESIGNED IN ACCORDANCE WITH
- AASHTO "LRFD BRIDGE DESIGN SPECIFICATIONS", 6TH EDITION
- VTRANS 2011 "STANDARD SPECIFICATIONS FOR CONSTRUCTION".

2. THE FOLLOWING SOIL PROPERTIES WERE USED IN THE DESIGN:

	SOIL WEIGHT [PCF]	FRICTION ANGLE [DEG]
• RETAINED SOIL	140	34
• FOUNDATION SOIL	140	40

- LIVE LOAD SURCHARGE = N/A
- BACKSLOPE ANGLE: ±2:1
- FACTORED BEARING RESISTANCE = 6000PSF (SERVICE), 15400PSF (STRENGTH)

3. CONCRETE SHALL BE SELF–CONSOLIDATING CONFORMING TO ASTM C260 WITH A MINIMUM 28–DAY COMPRESSIVE STRENGTH OF 5,000 PSI. AGGREGATE SHALL CONFORM TO ASTM C–33 WITH A MAXIMUM DIAMETER OF 3/4". CEMENT SHALL CONFORM TO ASTM C150.

4. REINFORCING SHALL BE GRADE 60 DEFORMED BLACK BARS CONFORMING TO ASTM A–615. ALL BARS SHALL BE BENT COLD.

5. ALL EXPOSED EDGES EXCEPT WHERE NOTED SHALL BE CHAMFERED 3/4".

6. BACKFILL MATERIAL SHALL CONFORM TO VTRANS SECTION 704.08 GRANULAR BACKFILL FOR STRUCTURES. PLACEMENT SHALL CONFORM TO VTRANS SECTION 204.08.

7. ALL EXPOSED EDGES OF CONCRETE SHALL BE COATED WITH A VTRANS APPROVED WATER REPELLANT (BY OTHERS).

8. SUBGRADE PREPARATION SHALL CONFORM TO VTRANS 204.07 BEDDING FOR STRUCTURES. FOOTINGS SHALL BE PLACED AT ELEVATIONS SHOWN ON A MINIMUM OF 1'–0" OF CRUSHED STONE CONFORMING TO VTRANS 704.05(A). ALL TOPSOIL, LOOSE FILL, AND DELETERIOUS MATERIALS SHALL BE REMOVED BEFORE PLACING BACKFILL.

LIST OF SHEETS:

S1.0 LAYOUT & PROFILE VIEW
S2.0 FOOTING LAYOUT, END ELEVATIONS & DETAILS
S3.0 BOX CULVERT DETAILS
S4.0 WINGWALL DETAILS
S5.0 ANCHOR DETAILS

No.	Date	Revision	By
△	XX/XX/XXXX	XX	XXX

STATE OF VERMONT – DARYL D. BURNS – No. 9031 – Structural I – LICENSED PROFESSIONAL ENGINEER
4/20/15

MICHIE CORPORATION
173 BUXTON INDUSTRIAL DRIVE - PO BOX 870
HENNIKER, NH 03242
PHONE: 603-428-3218
FAX: 603-428-7426
WWW.MICHIECORP.COM

Bridge 47 - Route 30 - VAOT STP Culv(31)
Winhall, VT

12'x7' Open Top Box Culvert - Layout and Profile View

Scale: AS SHOWN
Project No. 5779
Date: 2/26/2015 | Designed by: PJL/CFP | Drawn by: CFP | Checked by: PJL

Prepared for:
Renaud Brothers, Inc.
283 Fort Bridgeman Rd #2
Vernon, VT 05354

DWG NO.
S1.0

S:\PROJECTS\RENAUD BROTHERS\WINHALL, VT – VTRANS #STP CULV (31)\BRIDGE 47 PROJ 5779\DWGS\BC W TS 12X7 BR47 RENAUD 5779.DWG 4/15/2015 2:25 PM

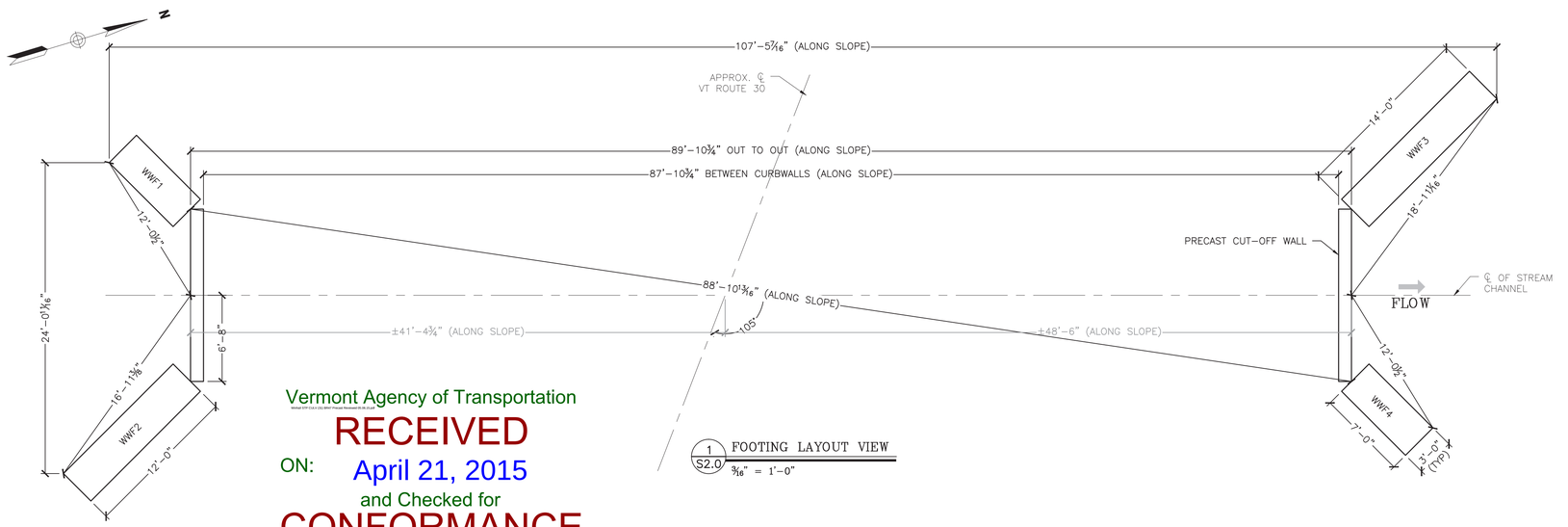

1 S2.0 FOOTING LAYOUT VIEW
3/16" = 1'-0"

Vermont Agency of Transportation
Version STP-CULV-(31)(WH) Printed 05-06-2015

RECEIVED
ON: April 21, 2015
and Checked for
CONFORMANCE
BY: Mark Sargent DATE: 5/7/2015

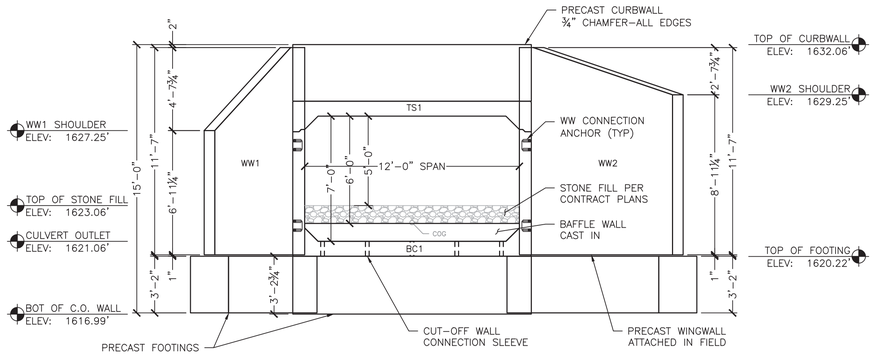

2 S2.0 INLET END ELEVATION
¼" = 1'-0"

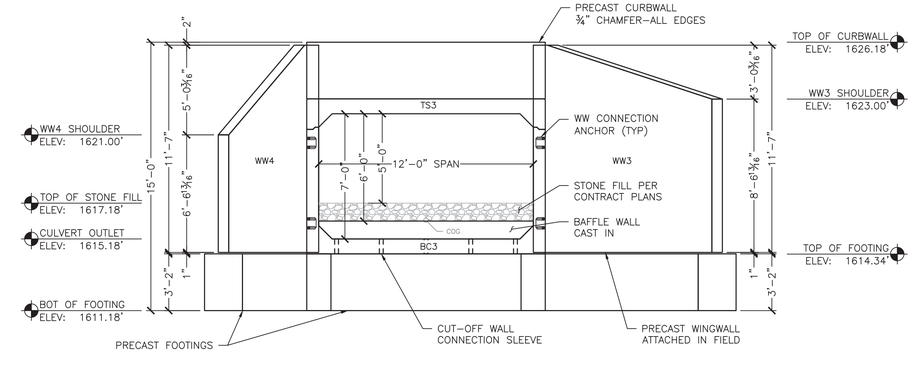

3 S2.0 OUTLET END ELEVATION
¼" = 1'-0"

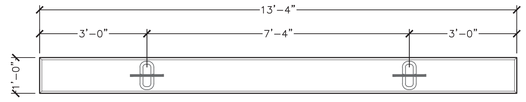

5 S2.0 C.O. WALL PLAN VIEW
½" = 1'-0"

CUT-OFF WALL - 2 REQ'D
ITEM 275800
UNIT WEIGHT AND VOLUME:
FOOTING: 1.56CY (6,550#)

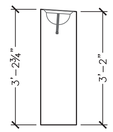

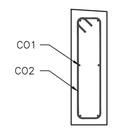

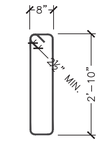

6 S2.0 C.O. WALL SECTIONS
½" = 1'-0"

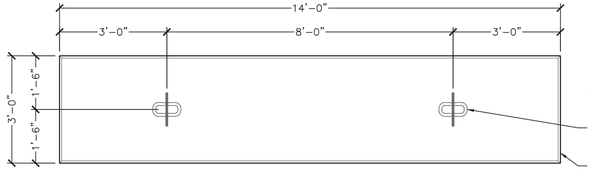

WWF3 - 1 REQ'D
ITEM 282401
UNIT WEIGHT AND VOLUME:
FOOTING: 4.93CY (20,700#)

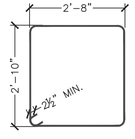

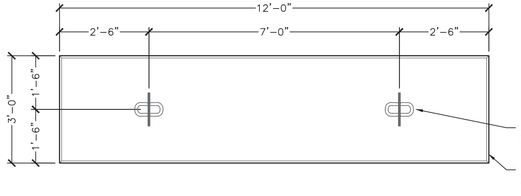

WWF2 - 1 REQ'D
ITEM 282401
UNIT WEIGHT AND VOLUME:
FOOTING: 4.22CY (17,720#)

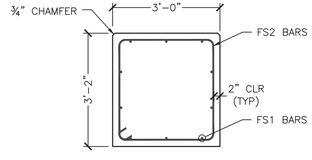

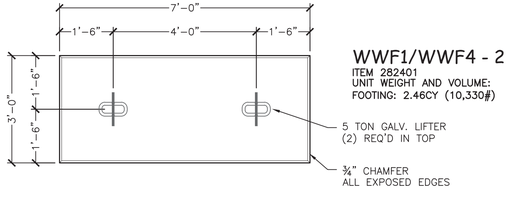

WWF1/WWF4 - 2 REQ'D
ITEM 282401
UNIT WEIGHT AND VOLUME:
FOOTING: 2.46CY (10,330#)

7 S2.0 WWF PLAN VIEW
½" = 1'-0"

NOTE:
PLACE DOWNSTREAM AND UPSTREAM ENDS OF CULVERT FLUSH WITH FACE AND SIDES OF CUTOFF WALLS (IN PLACE), BEFORE DRILLING DOWELING HOLES IN CUTOFF WALLS. FILL HOLES WITH NON SHRINK GROUT AFTER INSTALLATION.

4 S1.0 CUTOFF WALL CONNECTION DETAIL
¾" = 1'-0"

REVIEWED	x
REVIEWED AS MODIFIED	
REVISE AND RESUBMIT	
NOT REVIEWED	

Stantec

Date: 5/6/15

By: Michael J Chenette

This review by Stantec Consulting Services Inc. is for the sole purpose of ascertaining conformance with the general design concept. This review shall not mean that Stantec Consulting Services Inc approves the detail design inherent in the shop drawings, responsibility for which shall remain with the Contractor. Submitting same, and such review shall not relieve the Contractor of his responsibility for errors or omissions in the shop drawing or of his responsibility for meeting all requirements of the Contract Documents. The contractor is responsible for dimensions to be confirmed and correlated at the job site, for information that pertains solely to the fabrication processes or to techniques of construction and installation and for coordination of the work of all subtrades.

8 S2.0 WINGWALL FOOTING SECTION
½" = 1'-0"

WWF1/WWF4 REINFORCING (COUNTS REPRESENT 1 UNIT)						
LOCATION	MARK	QTY	SIZE	SPACING	TYPE	CUT LENGTH
FOOTING	FS1	10	#5	AS SHOWN	STRAIGHT	6'-8"
FOOTING	FS2	7	#4	12"O.C.	STIRRUP	11'-3"

WWF2 REINFORCING (COUNTS REPRESENT 1 UNIT)						
LOCATION	MARK	QTY	SIZE	SPACING	TYPE	CUT LENGTH
FOOTING	FS1	10	#5	AS SHOWN	STRAIGHT	11'-8"
FOOTING	FS2	12	#4	12"O.C.	STIRRUP	11'-3"

WWF3 REINFORCING (COUNTS REPRESENT 1 UNIT)						
LOCATION	MARK	QTY	SIZE	SPACING	TYPE	CUT LENGTH
FOOTING	FS1	10	#5	AS SHOWN	STRAIGHT	13'-8"
FOOTING	FS2	14	#4	12"O.C.	STIRRUP	11'-3"

No.	Date	Revision	By
4	XXXXXXXX	XX	XXX

STATE OF VERMONT
MICHAEL J. CHENETTE
No. 9031
Structural
PROFESSIONAL ENGINEER
4/20/15

MICHIE CORPORATION
173 BUXTON INDUSTRIAL DRIVE, PO BOX 870
HENNIKER, NH 03242
PHONE: 603-428-3218
FAX: 603-428-7426
WWW.MICHIECORP.COM

Bridge 47 - Route 30 - VAOT STP Culv(31)
Winhall, VT

12'x7' Open Top Box Culvert - Footing Layout and Elevations

Project No. 5779
Date: 2/26/2015
Scale: AS SHOWN
Checked by: PJL
Drawn by: CFP
Designed by: PJL/CFP

Prepared for:
Renaud Brothers, Inc.
283 Fort Bridgeman Rd #2
Vernon, VT 05354

DWG NO.
S2.0

Delta 2015.059.012

C:\PROJECTS\WINHALL BROTHERS\WINHALL VT – WINHALL #47 - CULV (31) BRIDGE #7 PROJ 5779\DWGS\BRIDGE #7 R15 12X7 BR47 REVISED 4-21-2015 2:25 PM

Delta 2015.059.012

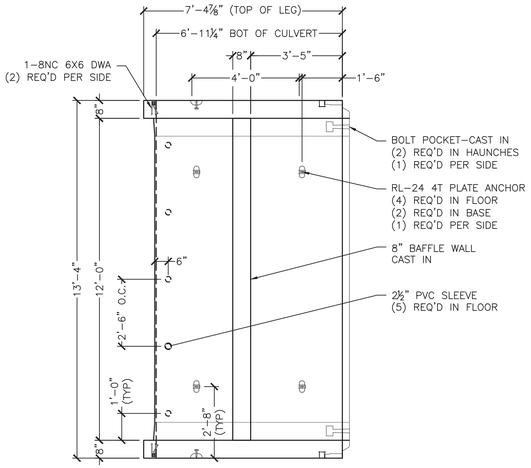

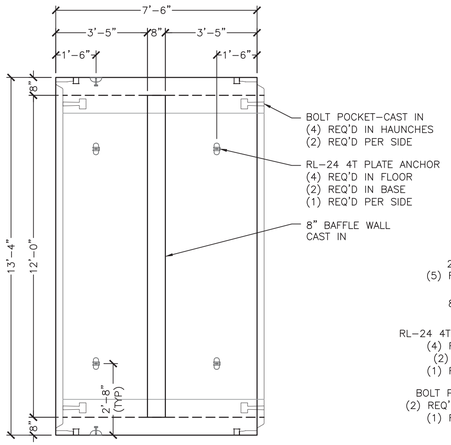

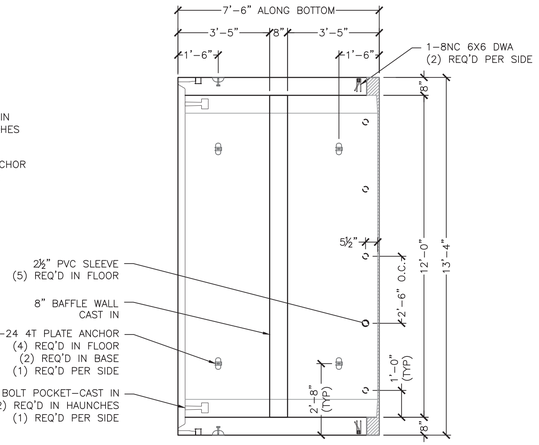

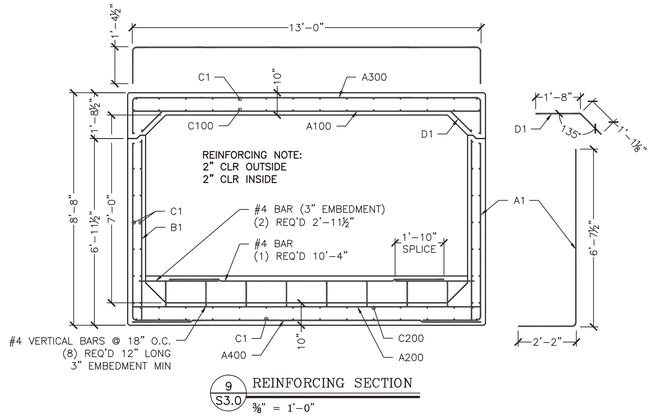

9 S3.0 REINFORCING SECTION
⅜" = 1'-0"

BC1 - 1 REQ'D
ITEM 281207
UNIT WEIGHT AND VOLUME:
CULVERT: 5.40CY (22,680#)
BAFFLE WALL: .28CY (1,180#)
TOTAL WEIGHT: 23,860#

1 S3.0 BC1 PLAN VIEW
⅜" = 1'-0"

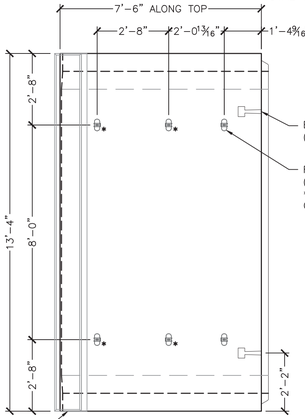

2 S3.0 TS1 PLAN VIEW
⅜" = 1'-0"

TS1 - 1 REQ'D
ITEM 281207
UNIT WEIGHT AND VOLUME:
TOP SLAB: 3.54CY (14,870#)
CURBWALL: 1.57CY (6,600#)
TOTAL WEIGHT: 21,470#

3 S3.0 BC2 PLAN VIEW
⅜" = 1'-0"

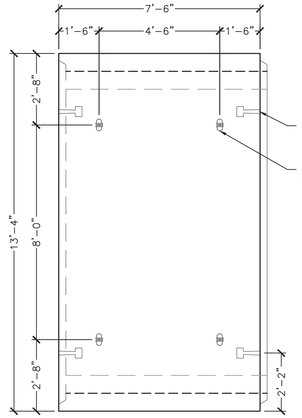

TS2 - 10 REQ'D
ITEM 281207
UNIT WEIGHT AND VOLUME:
TOP SLAB: 3.54CY (14,870#)

4 S3.0 TS2 PLAN VIEW
⅜" = 1'-0"

BC2 - 10 REQ'D
ITEM 281207
UNIT WEIGHT AND VOLUME:
CULVERT: 5.53CY (23,220#)
BAFFLE WALL: .28CY (1,180#)
TOTAL WEIGHT: 24,780#

5 S3.0 BC3 PLAN VIEW
⅜" = 1'-0"

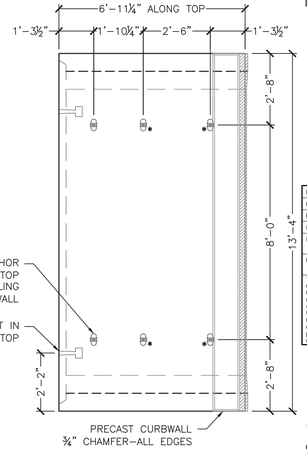

6 S3.0 TS3 PLAN VIEW
⅜" = 1'-0"

TS3 - 1 REQ'D
ITEM 281207
UNIT WEIGHT AND VOLUME:
TOP SLAB: 3.31CY (13,900#)
CURBWALL: 1.52CY (6,390#)
TOTAL WEIGHT: 20,290#

BC3 - 1 REQ'D
ITEM 281207
UNIT WEIGHT AND VOLUME:
CULVERT: 5.40CY (22,680#)
BAFFLE WALL: .28CY (1,180#)
TOTAL WEIGHT: 23,860#

Vermont Agency of Transportation
RECEIVED
ON: April 21, 2015
and Checked for
CONFORMANCE
BY: Mark Sargent DATE: 5/7/2015

REVIEWED	x
REVIEWED AS MODIFIED	
REVISE AND RESUBMIT	
NOT REVIEWED	

Date: 5/6/15

By: Michael J Chenette

This review by Stantec Consulting Services Inc. is for the sole purpose of ascertaining conformance with the general design concept. This review shall not mean that Stantec Consulting Services Inc approves the detail design inherent in the shop drawings, responsibility for which shall remain with the Contractor. Submitting same, and such review shall not relieve the Contractor of his responsibility for errors or omissions in the shop drawing or of his responsibility for meeting all requirements of the Contract Documents. The contractor is responsible for dimensions to be confirmed and correlated at the job site, for information that pertains solely to the fabrication processes or to techniques of construction and installation and for coordination of the work of all subtrades.

TS2/BC2 REINFORCING SCHEDULE (COUNTS REFLECT 1 UNIT)

LOCATION	MARK	QTY	SIZE	SPACING	TYPE	CUT LENGTH
TOP SLAB (INT)	A100	14	#9	6"	STRAIGHT	13'-0"
BOT. SLAB (INT)	A200	10	#5	9"	STRAIGHT	13'-0"
TOP SLAB (EXT)	A300	8	#4	12"	"U" BAR	15'-6½"
BOT. SLAB (EXT)	A400	13	#6	7"	STRAIGHT	13'-0"
WALL (EXT)	A1	26	#6	7"	"L" BAR	8'-8¼"
WALL (INT)	B1	20	#4	9"	STRAIGHT	6'-9"
LONGIT. TOP (EXT)	C1	14	#4	12"	STRAIGHT	7'-2"
LONGIT. TOP (INT)	C100	14	#4	12"	STRAIGHT	7'-2"
LONGIT. BOT. (INT)	C200	14	#4	12"	STRAIGHT	7'-2"
LONGIT. BOT (EXT)	C1	14	#4	12"	STRAIGHT	7'-2"
LONGIT. WALL (EXT)	C1	14	#4	12"	STRAIGHT	7'-2"
LONGIT. WALL (INT)	C1	14	#4	12"	STRAIGHT	7'-2"
TOP SLAB (HAUNCH)	D1	26	#4	7"	BENT BARS	2'-9¼"

TS1/BC1 REINFORCING SCHEDULE (COUNTS REFLECT 1 UNIT)

LOCATION	MARK	QTY	SIZE	SPACING	TYPE	CUT LENGTH	
TOP SLAB (INT)	A100	14	#9	6"	STRAIGHT	13'-0"	
BOT. SLAB (INT)	A200	10	#5	9"	STRAIGHT	13'-0"	
TOP SLAB (EXT)	A300	8	#4	12"	"U" BAR	15'-6½"	
BOT. SLAB (EXT)	A400	13	#6	7"	STRAIGHT	13'-0"	
WALL (EXT)	A1	26	#6	7"	"L" BAR	8'-8¼"	*
WALL (INT)	B1	18	#4	9"	STRAIGHT	6'-9"	*
LONGIT. TOP (EXT)	C1	14	#4	12"	STRAIGHT	7'-2"	
LONGIT. TOP (INT)	C100	14	#4	12"	STRAIGHT	7'-4½"	
LONGIT. BOT. (INT)	C200	14	#4	12"	STRAIGHT	6'-11"	
LONGIT. BOT (EXT)	C1	14	#4	12"	STRAIGHT	6'-7½"	
LONGIT. WALL (EXT)	C1	14	#4	12"	STRAIGHT	7'-1" TO 6'-7½"	
LONGIT. WALL (INT)	C1	14	#4	12"	STRAIGHT	7'-4" TO 6'-11"	
TOP SLAB (HAUNCH)	D1	26	#4	7"	BENT BARS	2'-9¼"	
TOP SLAB	DBS1	7	#4	24"	"L" DOWELS	2'-0"	
TOP SLAB	DBS2	14	#4	12"	"L" DOWELS	2'-0"	
CURBWALL	DBI1	14/7	#4	24"/12"	STRAIGHT	3'-0"	
CURBWALL	CWS1	8	#4	AS SHOWN	STRAIGHT	13'-0"	

TS3/BC3 REINFORCING SCHEDULE (COUNTS REFLECT 1 UNIT)

LOCATION	MARK	QTY	SIZE	SPACING	TYPE	CUT LENGTH	
TOP SLAB (INT)	A100	14	#9	6"	STRAIGHT	13'-0"	
BOT. SLAB (INT)	A200	10	#5	9"	STRAIGHT	13'-0"	
TOP SLAB (EXT)	A300	7	#4	12"	"U" BAR	15'-6½"	
BOT. SLAB (EXT)	A400	13	#6	7"	STRAIGHT	13'-0"	
WALL (EXT)	A1	26	#6	7"	"L" BAR	8'-8¼"	*
WALL (INT)	B1	20	#4	9"	STRAIGHT	6'-9"	*
LONGIT. TOP (EXT)	C1	14	#4	12"	STRAIGHT	6'-7"	
LONGIT. TOP (INT)	C100	14	#4	12"	STRAIGHT	6'-4½"	
LONGIT. BOT. (INT)	C200	14	#4	12"	STRAIGHT	6'-10"	
LONGIT. BOT (EXT)	C1	14	#4	12"	STRAIGHT	7'-2"	
LONGIT. WALL (EXT)	C1	14	#4	12"	STRAIGHT	7'-2" TO 6'-8½"	
LONGIT. WALL (INT)	C1	14	#4	12"	STRAIGHT	6'-11" TO 6'-5¼"	
TOP SLAB (HAUNCH)	D1	24	#4	7"	BENT BARS	2'-9¼"	
TOP SLAB	DBS1	7	#4	24"	"L" DOWELS	2'-0"	
TOP SLAB	DBS2	14	#4	12"	"L" DOWELS	2'-0"	
CURBWALL	DBI1	14/7	#4	24"/12"	STRAIGHT	3'-0"	
CURBWALL	CWS1	8	#4	AS SHOWN	STRAIGHT	13'-0"	

*SPLAY LAST BAR TO FOLLOW SLOPE
MAINTAIN MAX SPACING

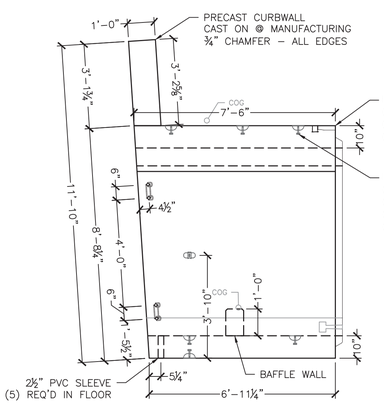

7 S3.0 BC1/TS1 ELEV. VIEW
⅜" = 1'-0"

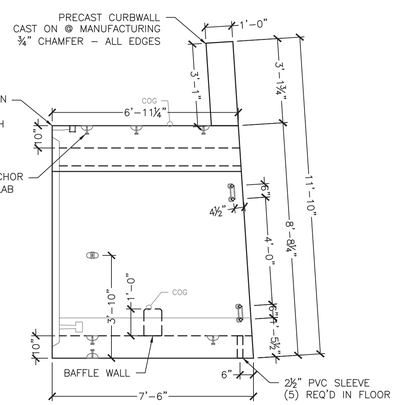

8 S3.0 BC3/TS3 ELEV. VIEW
⅜" = 1'-0"

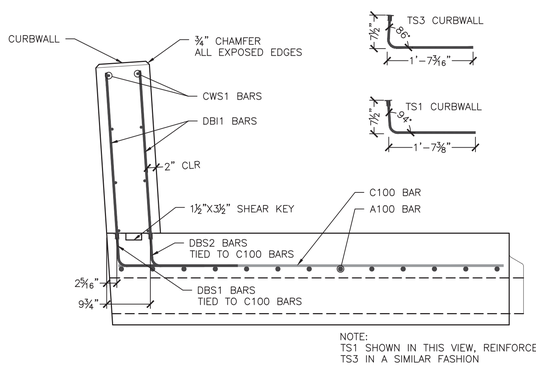

NOTE:
TS1 SHOWN IN THIS VIEW, REINFORCE
TS3 IN A SIMILAR FASHION

10 S3.0 CURBWALL REINFORCING SECTION
¾" = 1'-0"

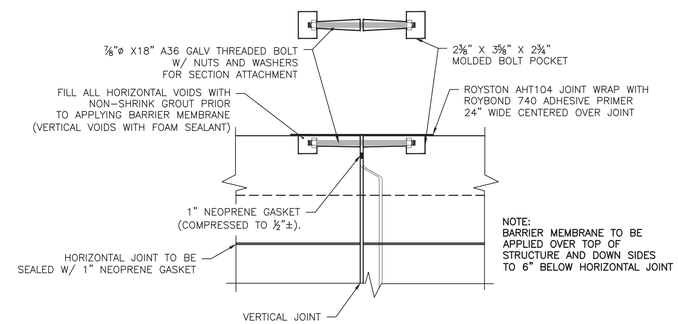

NOTE:
BARRIER MEMBRANE TO BE
APPLIED OVER TOP OF
STRUCTURE AND DOWN SIDES
TO 6" BELOW HORIZONTAL JOINT

11 S3.0 BOX CULVERT JOINT CONNECTION DETAIL
1" = 1'-0"

No.	Date	Revision	By
			XXX
	XX/XX/XXXX	XX	

STATE OF VERMONT
MICHAEL J. CHENETTE
No. 9031
Structural
Licensed Professional
PROFESSIONAL ENGINEER
4/20/15

MICHIE CORPORATION
173 BUXTON INDUSTRIAL DRIVE - PO BOX 870
HENNIKER, NH 03242
PHONE: 603-428-3218
FAX: 603-428-7426
WWW.MICHIECORP.COM

Bridge 47 - Route 30 - VAOT STP Culv(31)
Winhall, VT

12'x7' Open Top Box Culvert - Culvert Section Details

Project No. 5779
Date: 2/26/2015
Designed by: PJL/CFP
Drawn by: CFP
Checked by: PJL
Scale: AS SHOWN

Prepared for:
Renaud Brothers, Inc.
283 Fort Bridgeman Rd #2
Vernon, VT 05354

DWG NO.
S3.0

V:\PROJECTS\RENAUD BROTHERS\WINHALL, VT - VTRANS #STP 5279 (31)\BRIDGE #47 PROJ 5279 (31)\BRIDGE #47 PROJ 5779.DWG 4/15/2015 2:25 PM

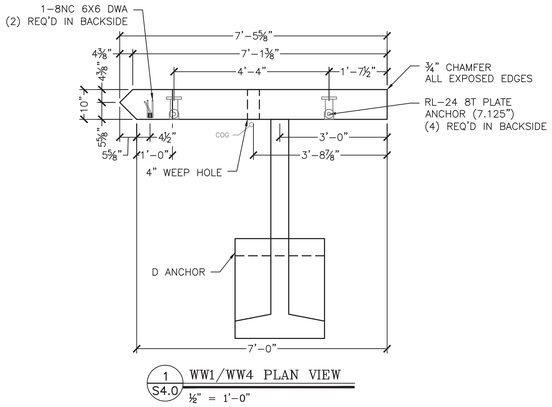

1 S4.0 WW1/WW4 PLAN VIEW
½" = 1'–0"

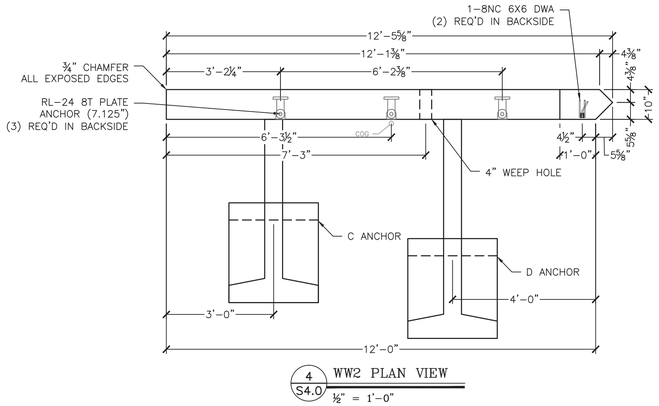

4 S4.0 WW2 PLAN VIEW
½" = 1'–0"

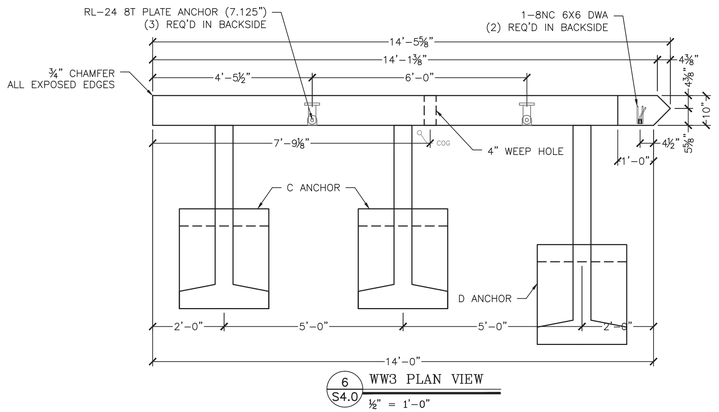

6 S4.0 WW3 PLAN VIEW
½" = 1'–0"

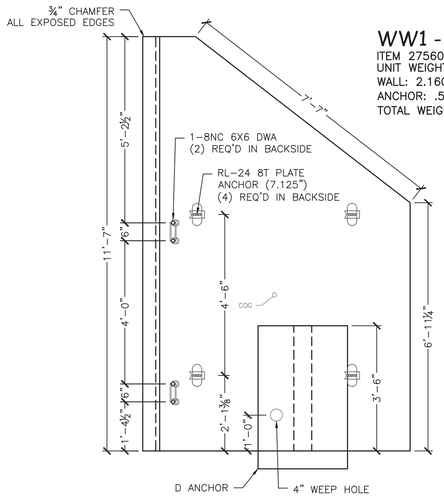

WW1 - 1 REQ'D
ITEM 275602
UNIT WEIGHT AND VOLUME:
WALL: 2.16CY (9,080#)
ANCHOR: .54CY (2,285#)
TOTAL WEIGHT: 11,365#

2 S4.0 WW1 ELEVATION VIEW
½" = 1'–0" (Looking @ Backside)

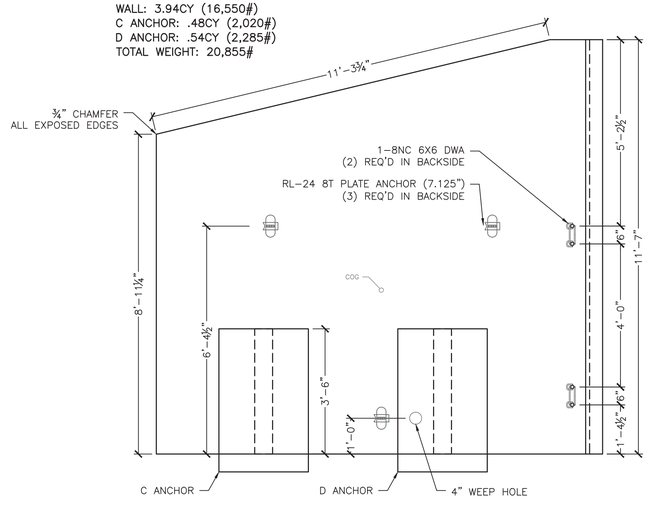

WW2 - 1 REQ'D
ITEM 275602
UNIT WEIGHT AND VOLUME:
WALL: 3.94CY (16,550#)
C ANCHOR: .48CY (2,020#)
D ANCHOR: .54CY (2,285#)
TOTAL WEIGHT: 20,855#

5 S4.0 WW2 ELEVATION VIEW
½" = 1'–0" (Looking @ Backside)

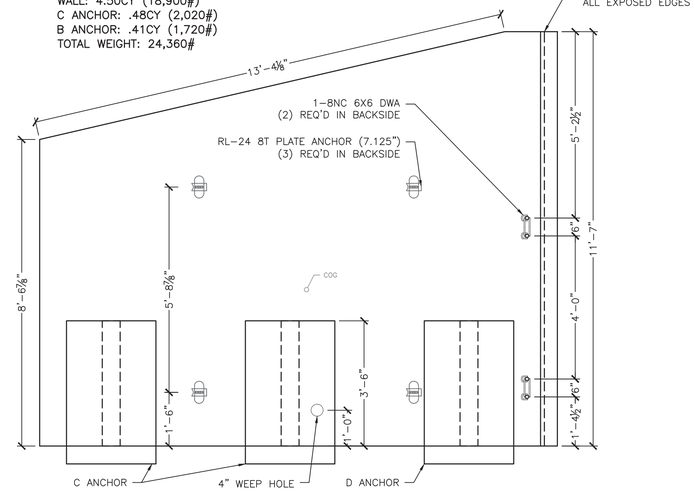

WW3 - 1 REQ'D
ITEM 275602
UNIT WEIGHT AND VOLUME:
WALL: 4.50CY (18,900#)
C ANCHOR: .48CY (2,020#)
B ANCHOR: .41CY (1,720#)
TOTAL WEIGHT: 24,360#

7 S4.0 WW3 ELEVATION VIEW
½" = 1'–0" (Looking @ Backside)

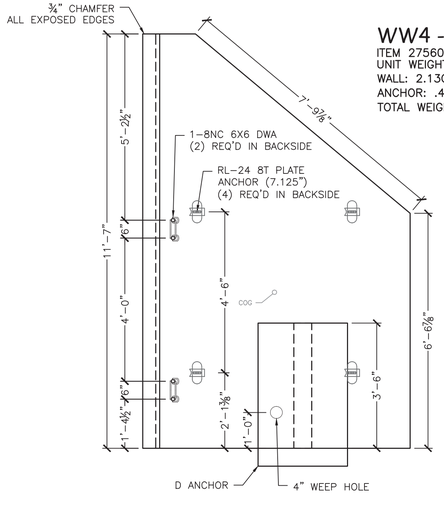

3 S4.0 WW4 ELEVATION VIEW
½" = 1'–0" (Looking @ Backside)

WW4 - 1 REQ'D
ITEM 275602
UNIT WEIGHT AND VOLUME:
WALL: 2.13CY (8,950#)
ANCHOR: .48CY (2,020#)
TOTAL WEIGHT: 10,970#

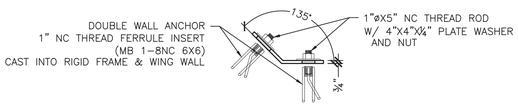

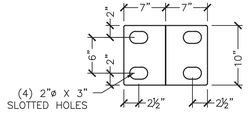

WW BRACKET
(8 REQUIRED)

PLATES TO BE MADE OF ¾" MILD STEEL,
PLASMA CUT, AND BENT AS REQUIRED.
(HOT DIPPED GALVANIZED AFTER BENDING)

8 S4.0 WINGWALL BRACKET DETAIL
1" = 1'–0"

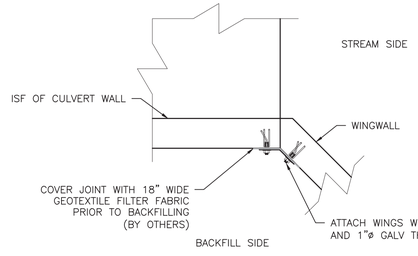

9 S4.0 BRIDGE TO WW JOINT DETAIL
½" = 1'–0"

Vermont Agency of Transportation
Manual STP-CLK-1 (01) BRKT Preview Reviewed 05-06-15.pdf

RECEIVED
ON: April 21, 2015
and Checked for
CONFORMANCE
BY: Mark Sargent DATE: 5/7/2015

REVIEWED	x	Stantec
REVIEWED AS MODIFIED		
REVISE AND RESUBMIT		
NOT REVIEWED		
Date: 5/6/15		
By: Michael J Chenette		

This review by Stantec Consulting Services Inc. is for the sole purpose of ascertaining conformance with the general design concept. This review shall not mean that Stantec Consulting Services Inc approves the detail design inherent in the shop drawings, responsibility for which shall remain with the Contractor. Submitting same, and such review shall not relieve the Contractor of his responsibility for errors or omissions in the shop drawing or of his responsibility for meeting all requirements of the Contract Documents. The contractor is responsible for dimensions to be confirmed and correlated at the job site, for information that pertains solely to the fabrication processes or to techniques of construction and installation and for coordination of the work of all subtrades.

No.	Date	Revision	By
4	XX/XX/XXXX	XX	XXX

STATE OF VERMONT
MICHAEL J. CHENETTE
No. 9031
Structural
Vermont Engineer
PROFESSIONAL ENGINEER
4/20/15

MICHIE CORPORATION
173 BUXTON INDUSTRIAL DRIVE - PO BOX 870
HENNIKER, NH 03242
PHONE: 603-428-3218
FAX: 603-428-7426
WWW.MICHIECORP.COM

Bridge 47 - Route 30 - VAOT STP Culv(31)
Winhall, VT
12'x7' Open Top Box Culvert - Wingwall Details

Project No. 5779
Date: 2/26/2015
Scale: AS SHOWN
Drawn by: CFP
Designed by: PJL/CFP
Checked by: PJL

Prepared for:
Renaud Brothers, Inc.
283 Fort Bridgeman Rd #2
Vernon, VT 05354

DWG NO.
S4.0

Delta 2015.059.012

PROJECTS\VTRAD BROTHERS\WINHALL, VT - VTROUTE 30\CULV (31)\BRIDGE 47 PROD 5779\DWGS\BS W 15 1232 BRKT REVISED 5779.DWG 5/15/2015 2:25 PM

Delta 2015.059.012

NOTE: BAR COUNTS REPRESENT 1 UNIT.

WW1 REINFORCING SCHEDULE					
BAR MARK	LOCATION	TYPE	SIZE/SPACING	CUT LENGTH	# OF PCS
VERTICAL	OSF	STRAIGHT	#4 @ 12"	11'-3" TO 6'-7¾"	7
VERTICAL	ISF	STRAIGHT	#6 @ 10"	11'-3" TO 6'-7¾"	9
HORIZONTAL	OSF	STRAIGHT	#4 @ 12"	6'-11½"	12
HORIZONTAL	ISF	STRAIGHT	#4 @ 12"	6'-10¾"	12
DIAGONAL	FOLLOW SLOPE	STRAIGHT	#4	7'-3"	2

WW4 REINFORCING SCHEDULE					
BAR MARK	LOCATION	TYPE	SIZE/SPACING	CUT LENGTH	# OF PCS
VERTICAL	OSF	STRAIGHT	#4 @ 12"	11'-3" TO 6'-2⅞"	7
VERTICAL	ISF	STRAIGHT	#6 @ 10"	11'-3" TO 6'-2⅞"	9
HORIZONTAL	OSF	STRAIGHT	#4 @ 12"	6'-11½"	12
HORIZONTAL	ISF	STRAIGHT	#4 @ 12"	6'-10¾"	12
DIAGONAL	FOLLOW SLOPE	STRAIGHT	#4	7'-3"	2

WW2 REINFORCING SCHEDULE					
BAR MARK	LOCATION	TYPE	SIZE/SPACING	CUT LENGTH	# OF PCS
VERTICAL	OSF	STRAIGHT	#4 @ 12"	11'-3" TO 8'-7¾"	12
VERTICAL	ISF	STRAIGHT	#6 @ 10"	11'-3" TO 8'-7¾"	15
HORIZONTAL	OSF	STRAIGHT	#4 @ 12"	11'-11½"	12
HORIZONTAL	ISF	STRAIGHT	#4 @ 12"	11'-10¾"	12
DIAGONAL	FOLLOW SLOPE	STRAIGHT	#4	11'-0"	2

WW3 REINFORCING SCHEDULE					
BAR MARK	LOCATION	TYPE	SIZE/SPACING	CUT LENGTH	# OF PCS
VERTICAL	OSF	STRAIGHT	#4 @ 12"	11'-3" TO 8'-2⅞"	14
VERTICAL	ISF	STRAIGHT	#6 @ 10"	11'-3" TO 8'-2⅞"	17
HORIZONTAL	OSF	STRAIGHT	#4 @ 12"	13'-11½"	12
HORIZONTAL	ISF	STRAIGHT	#4 @ 12"	13'-10¾"	12
DIAGONAL	FOLLOW SLOPE	STRAIGHT	#4	13'-0"	2

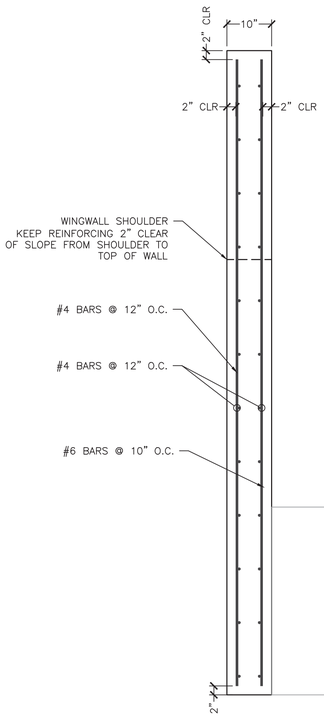

1 S5.0 WINGWALL REINFORCING (TYP)
¾" = 1'-0"

Vermont Agency of Transportation

Method EPP CLA V (D) BR47 Printed Reviewed 05.06.15 pk

RECEIVED
ON: April 21, 2015
and Checked for
CONFORMANCE
BY: Mark Sargent DATE: 5/7/2015

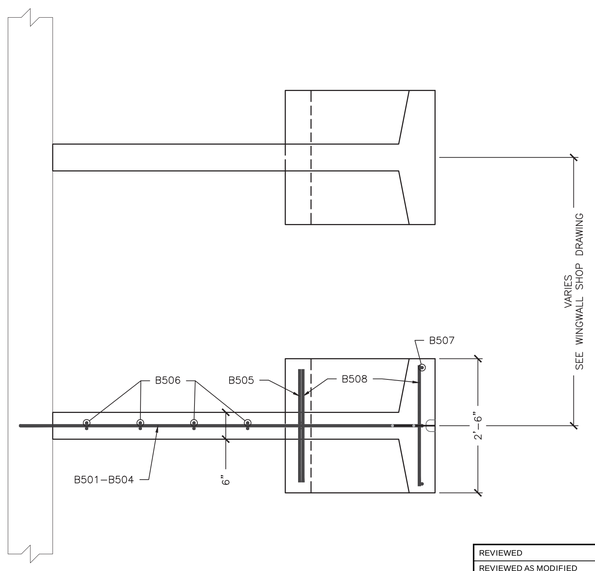

3 REQ'D

4 REQ'D

REVIEWED	x
REVIEWED AS MODIFIED	
REVISE AND RESUBMIT	
NOT REVIEWED	

Stantec

Date: 5/6/15

By: Michael J Chenette

This review by Stantec Consulting Services Inc. is for the sole purpose of ascertaining conformance with the general design concept. This review shall not mean that Stantec Consulting Services Inc approves the detail design inherent in the shop drawings, responsibility for which shall remain with the Contractor. Submitting same, and such review shall not relieve the Contractor of his responsibility for errors or omissions in the shop drawing or of his responsibility for meeting all requirements of the Contract Documents. The contractor is responsible for dimensions to be confirmed and correlated at the job site, for information that pertains solely to the fabrication processes or to techniques of construction and installation and for coordination of the work of all subtrades.

NOTE: REINFORCING SHOWN REPRESENTS "E" ANCHOR
OTHER ANCHOR REINFORCING SIMILAR

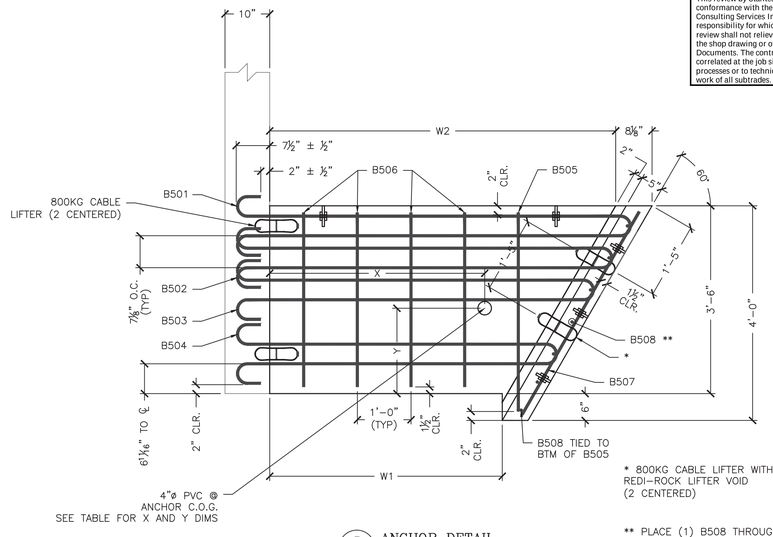

3 S5.0 ANCHOR DETAIL
¾" = 1'-0"

* 800KG CABLE LIFTER WITH
REDI-ROCK LIFTER VOID
(2 CENTERED)

** PLACE (1) B508 THROUGH EACH HOOP BARS,
(1) CENTERED BETWEEN HOOP BARS 503 & 504, AND
(2) BELOW B504 HOOP BAR W/ BOTTOM B508
2" CLEAR FROM BOTTOM (7 TOTAL)

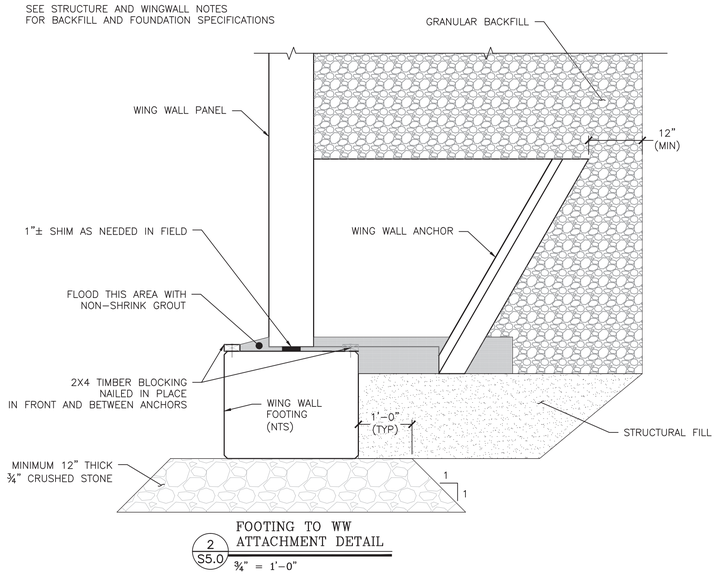

2 S5.0 FOOTING TO WW ATTACHMENT DETAIL
¾" = 1'-0"

ANCHOR TYPE "B"					
CONCRETE QUANTITY				0.41 CY	
WEIGHT				1740 LB	
W1				1'-4"	
W2				3'-5⅜"	
X = 2'-2⅛"		Y= 1'-8⅜"			
BAR LIST					
MARK	QTY	SIZE	L	TYPE	LENGTH
B501	1	#5	4'-4½"	1	10'-1½"
B502	1	#5	4'-0½"	1	9'-5"
B503	1	#5	3'-8¾"	1	8'-9"
B504	1	#5	3'-0"	1	7'-4½"
B505	2	#5	3'-8½"	2	4'-7"
B506	2	#5	----	Str.	3'-3"
B507	4	#5	----	Str.	4'-4½"
B508	7	#5	----	Str.	2'-3"

ANCHOR TYPE "C"					
CONCRETE QUANTITY				0.48 CY	
WEIGHT				2010 LB	
W1				2'-4"	
W2				4'-5⅜"	
X = 2'-8¾"		Y= 1'-8½"			
BAR LIST					
MARK	QTY	SIZE	L	TYPE	LENGTH
B501	1	#5	5'-4½"	1	12'-1½"
B502	1	#5	5'-0½"	1	11'-5"
B503	1	#5	4'-8¾"	1	10'-9"
B504	1	#5	4'-0"	1	9'-4½"
B505	2	#5	3'-8½"	2	4'-7"
B506	4	#5	----	Str.	3'-3"
B507	4	#5	----	Str.	4'-4½"
B508	7	#5	----	Str.	2'-3"

ANCHOR TYPE "D"					
CONCRETE QUANTITY				0.54 CY	
WEIGHT				2285 LB	
W1				3'-4"	
W2				5'-5⅜"	
X = 3'-5⅜"		Y= 1'-8½"			
BAR LIST					
MARK	QTY	SIZE	L	TYPE	LENGTH
B501	1	#5	6'-4½"	1	14'-1½"
B502	1	#5	6'-0½"	1	13'-5"
B503	1	#5	5'-8¾"	1	12'-9"
B504	1	#5	5'-0"	1	11'-4½"
B505	2	#5	3'-8½"	2	4'-7"
B506	6	#5	----	Str.	3'-3"
B507	4	#5	----	Str.	4'-4½"
B508	7	#5	----	Str.	2'-3"

ANCHOR TYPE "E"					
CONCRETE QUANTITY				0.61 CY	
WEIGHT				2550 LB	
W1				4'-4"	
W2				6'-5⅜"	
X = 4'-0"		Y= 1'-8⅞"			
BAR LIST					
MARK	QTY	SIZE	L	TYPE	LENGTH
B501	1	#5	7'-4½"	1	16'-1½"
B502	1	#5	7'-0½"	1	15'-5"
B503	1	#5	6'-8¾"	1	14'-9"
B504	1	#5	6'-0"	1	13'-4½"
B505	2	#5	3'-8½"	2	4'-7"
B506	8	#5	----	Str.	3'-3"
B507	4	#5	----	Str.	4'-4½"
B508	7	#5	----	Str.	2'-3"

ANCHOR TYPE "F"					
CONCRETE QUANTITY				0.68 CY	
WEIGHT				2860 LB	
W1				5'-4"	
W2				7'-5⅜"	
X = 4'-7⅞"		Y= 1'-8⅞"			
BAR LIST					
MARK	QTY	SIZE	L	TYPE	LENGTH
B501	1	#5	8'-4½"	1	18'-1½"
B502	1	#5	8'-0½"	1	17'-5"
B503	1	#5	7'-8¾"	1	16'-9"
B504	1	#5	7'-0"	1	15'-4½"
B505	2	#5	3'-8½"	2	4'-7"
B506	10	#5	----	Str.	3'-3"
B507	4	#5	----	Str.	4'-4½"
B508	7	#5	----	Str.	2'-3"

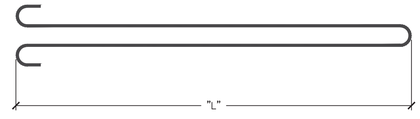

TYPE 1

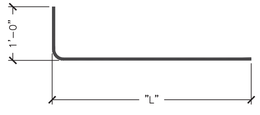

TYPE 2

No.	Date	Revision	By
4	4/20/15	XX	XXX

MICHIE CORPORATION
173 BUXTON INDUSTRIAL DRIVE, PO BOX 870
HENNIKER, NH 03242
PHONE: 603-428-3218
FAX: 603-428-7426
WWW.MICHIECORP.COM

Bridge 47 - Route 30 - VAOT STP Culv(31)
Winhall, VT
12'x7' Open Top Box Culvert - Anchor WW Details

Project No. 5779
Date: 2/26/2015
Designed by: PJL/CFP
Drawn by: CFP
Checked by: PJL
Scale: AS SHOWN

Prepared for:
Renaud Brothers, Inc.
283 Fort Bridgeman Rd #2
Vernon, VT 05354

DWG NO.
S5.0

C:\PROJECTS\RENAUD BROTHERS\WINHALL, VT - VTRANS #STP CULV (31)\BRIDGE 47 PROJ 5779\DWGS\Vtrans_#_is_1_12x7_BR47_REVISED_5779.dwg, 4/17/2015 2:25 PM