STATE OF VERMONT
AGENCY OF TRANSPORTATION

PRELIMINARY INFORMATION SHEET (BRIDGE)

Version 12.09.13

LRFD

INDEX OF SHEETS

PLAN SHEETS

1	TITLE SHEET
2	PRELIMINARY INFORMATION SHEET
3 - 4	TYPICAL SECTIONS 1 - 2
5	PROJECT NOTES
6 - 8	QUANTITY SHEETS 1 - 3
9	BRIDGE QUANTITY SHEET
10	CONVENTIONAL SYMBOLOGY - LEGEND
11	TIE SHEET
12	ALIGNMENT
13	LAYOUT
14	VT 100 AND TH 7 PROFILES
15	DRAINAGE LAYOUT
16	DRAINAGE PROFILES
17	DRAINAGE DETAILS
18	TRAFFIC SIGNS AND PAVEMENT MARKINGS
19	TRAFFIC SIGN SUMMARY
20	DETOUR LAYOUT
21	BORING INFORMATION
22 - 23	BORING LOGS 1 - 2
24	PLAN AND ELEVATION
25	DECK REINFORCING PLAN & TYPICAL
26	DECK FRAMING PLAN
27	APPROACH SLAB PLANS & TYPICAL
28	ABUTMENT #1 PLAN & ELEVATION
29	ABUTMENT #2 PLAN & ELEVATION AND BEARING DETAIL
30	WINGWALLS 1-4 ELEVATIONS & TYPICALS
31	REINFORCING STEEL SCHEDULE
32 - 37	VT 100 CROSS SECTIONS 1 - 6
38	BANKING / MATERIAL TRANSITION
39	TOWN HIGHWAY 7 CROSS SECTIONS
40 - 42	CHANNEL CROSS SECTIONS 1 - 3
43	EPSC NARRATIVE
44	EPSC EXISTING CONDITIONS
45	EPSC CONSTRUCTION CONDITIONS
46	EPSC FINAL CONDITIONS
47 - 49	EPSC DETAILS 1 - 2
50	R.O.W. DETAIL SHEET
51	ROW LAYOUT 1 SHEET 1 OF 1

STANDARDS LIST

D-15	PRECAST REINF CONC. MH-GRATES, CAST IRON GRATE WITH FRAME, TYPE D & E	06-01-1994
E-121	STANDARD SIGN PLACEMENT - CONVENTIONAL ROAD	08-08-1995
E-141	REGULATORY SIGN DETAILS	09-20-1995
E-142	REGULATORY SIGN DETAILS	09-20-1995
E-160	FLANGED CHANNEL STEEL SIGN POST	05-20-1999
E-161	W-SHAPED STEEL SIGN POST	08-18-1995
E-162	TUBULAR ALUMINUM SIGN POST	05-20-1999
E-163	TUBULAR STEEL SIGN POST	05-20-1999
E-191	PAVEMENT MARKING DETAILS	02-01-1999
E-192	PAVEMENT MARKING DETAILS	10-12-2000
E-193	PAVEMENT MARKING DETAILS	08-18-1995
G-1BM	BOX BEAM GUARD RAIL	06-13-1997
S-364A	BRIDGE RAILING, GALVANIZED 3 RAIL BOX BEAM	02-10-2014
S-364B	GUARDRAIL APPROACH SECTION, GALVANIZED 3 RAIL BOX BEAM	02-10-2014
S-364C	GUARDRAIL APPROACH SECTION, GALVANIZED 3 RAIL BOX BEAM	02-10-2014
S-364D	GUARDRAIL APPROACH SECTION, GALVANIZED 3 RAIL BOX BEAM	04-23-2012
T-1	TRAFFIC CONTROL GENERAL NOTES	08-06-2012
T-10	CONVENTIONAL ROADS CONSTRUCTION APPROACH SIGNING	08-06-2012
T-28	CONSTRUCTION SIGN DETAILS	08-06-2012
T-35	CONSTRUCTION ZONE LONGITUDINAL DROP-OFFS	08-06-2012
T-42	BRIDGE NUMBER PLAQUE	04-09-2014
T-45	SQUARE TUBE SIGN POST AND ANCHOR	01-02-2013

STRUCTURES DETAIL SHEETS

SD-501.00	CONCRETE DETAILS AND NOTES	02-09-2012
SD-502.00	CONCRETE DETAILS AND NOTES	10-10-2012
SD-516.10	BRIDGE JOINT ASHPALTIC PLUG	08-29-2011
SD-601.00	STRUCTURAL STEEL DETAILS AND NOTES	06-04-2010
SD-602.00	STRUCTURAL STEEL PLATE GIRDER DETAILS AND NOTES	05-02-2011

FINAL HYDRAULIC REPORT

HYDROLOGIC DATA

Date: Nov. 2012

DRAINAGE AREA : 9.4 sq. mi.
CHARACTER OF TERRAIN : Hilly to mountainous, mostly forested.
STREAM CHARACTERISTICS : Sinuous, semi-alluvial and probably incised.
NATURE OF STREAMBED : Mostly cobbles and boulders with some gravel.

PEAK FLOW DATA

Q 2.33 =	900 cfs	Q 50 =	3550 cfs
Q 10 =	1900 cfs	Q 100 =	4300 cfs
Q 25 =	2800 cfs	Q 500 =	5800 cfs

DATE OF FLOOD OF RECORD: Unknown
ESTIMATED DISCHARGE: Unknown
WATER SURFACE ELEV.: Unknown
NATURAL STREAM VELOCITY : @ Q50 = 14.2 fps
ICE CONDITIONS : Moderate
DEBRIS: Moderate
DOES THE STREAM REACH MAXIMUM HIGHWATER ELEV. RAPIDLY? Yes
IS ORDINARY RISE RAPID? Yes
IS STAGE AFFECTED BY UPSTREAM OR DOWNSTREAM CONDITIONS? No
IF YES, DESCRIBE:

WATERSHED STORAGE: < 1%
HEADWATERS:
UNIFORM: X
IMMEDIATELY ABOVE SITE:

EXISTING STRUCTURE INFORMATION

STRUCTURE TYPE: Single span steel beam bridge with concrete deck.
YEAR BUILT: 1929
CLEAR SPAN(NORMAL TO STREAM): 59'
VERTICAL CLEARANCE ABOVE STREAMBED: 14'
WATERWAY OF FULL OPENING: 570 sq. ft.
DISPOSITION OF STRUCTURE: Remove
TYPE OF MATERIAL UNDER SUBSTRUCTURE: See boring logs.

WATER SURFACE ELEVATIONS AT:

Q2.33 =	1408.6'	VELOCITY =	9.9 fps
Q10 =	1410.8'	"	12.2 fps
Q25 =	1412.5'	"	13.6 fps
Q50 =	1413.7'	"	14.4 fps
Q100 =	1414.7'	"	15.1 fps

LONG TERM STREAMBED CHANGES: Comparing current survey to record plans and the flood insurance study, it appears there may have been some degradation in the past.

IS THE ROADWAY OVERTOPPED BELOW Q100: No
FREQUENCY: Above Q100
RELIEF ELEVATION: 1418.6'
DISCHARGE OVER ROAD @Q100: N/A

UPSTREAM STRUCTURE

TOWN:	Wardsboro	DISTANCE:	3000'
HIGHWAY # :	TH 29	STRUCTURE #:	26
CLEAR SPAN:	69'	CLEAR HEIGHT:	7.5'
YEAR BUILT:	1939	FULL WATERWAY:	N/A

STRUCTURE TYPE: Single span steel beam bridge with timber deck.

DOWNSTREAM STRUCTURE

TOWN:	Wardsboro	DISTANCE:	8000'
HIGHWAY # :	TH 6	STRUCTURE #:	27
CLEAR SPAN:	96'	CLEAR HEIGHT:	19'
YEAR BUILT:	1978	FULL WATERWAY:	N/A

STRUCTURE TYPE: Single span steel beam bridge.

PROPOSED STRUCTURE

STRUCTURE TYPE: Single span steel beam bridge with concrete deck.

CLEAR SPAN(NORMAL TO STREAM): 65'
VERTICAL CLEARANCE ABOVE STREAMBED: 14'
WATERWAY OF FULL OPENING: 590 sq. ft.

WATER SURFACE ELEVATIONS AT:

Q2.33 =	1408.6'	VELOCITY=	9.9 fps
Q10 =	1410.8'	"	12.2 fps
Q25 =	1412.5'	"	13.6 fps
Q50 =	1413.7'	"	14.4 fps
Q100 =	1414.7'	"	15.1 fps

IS THE ROADWAY OVERTOPPED BELOW Q100: No
FREQUENCY: Above Q100
RELIEF ELEVATION: 1418.6'
DISCHARGE OVER ROAD @Q100: N/A

AVERAGE LOW ELEVATION OF SUPERSTRUCTURE: 1416.2'
VERTICAL CLEARANCE: @ Q50 = 2.5'

SCOUR: Total long term degradation and contraction scour = 2' at Q100 and 4' at Q500.

REQUIRED CHANNEL PROTECTION: Stone Fill, Type IV

PERMIT INFORMATION

AVERAGE DAILY FLOW:	20 cfs	DEPTH OR ELEVATION:
ORDINARY LOW WATER:	10 cfs	Depth = 0.5'
ORDINARY HIGH WATER:	390 cfs	Depth = 3.0'

TEMPORARY BRIDGE REQUIREMENTS

STRUCTURE TYPE: Single span bridge
CLEAR SPAN (NORMAL TO STREAM): 58' minimum
VERTICAL CLEARANCE ABOVE STREAMBED: Elev. 1414.0' minimum
WATERWAY AREA OF FULL OPENING: 395 sq. ft. minimum

ADDITIONAL INFORMATION

TRAFFIC MAINTENANCE NOTES

1. MAINTAIN TWO-WAY TRAFFIC ON A TEMPORARY BRIDGE.
2. TRAFFIC SIGNALS ARE NOT NECESSARY.
3. SIDEWALKS ARE NOT NECESSARY
4. THE APPROACHES FOR THE TEMPORARY BRIDGE SHALL BE PAVED.

DESIGN VALUES

1. DESIGN LIVE LOAD		HL-93
2. FUTURE PAVEMENT	d_p:	2.5 INCH
3. DESIGN SPAN	L:	68.00 FT
4. MIN. MID-SPAN POS. CAMBER @ RELEASE (PRESTRESSED UNITS)	Δ:	- - -
5. PRESTRESSING STRAND	f_y:	- - -
6. PRESTRESSED CONCRETE STRENGTH	f'_c:	- - -
7. PRESTRESSED CONCRETE RELEASE STRENGTH	f'_{ci}:	- - -
8. CONCRETE, HIGH PERFORMANCE CLASS AA	f'_c:	---
9. CONCRETE, HIGH PERFORMANCE CLASS A	f'_c:	4.0 KSI
10. CONCRETE, HIGH PERFORMANCE CLASS B	f'_c:	3.5 KSI
11. CONCRETE, CLASS C	f'_c:	---
12. REINFORCING STEEL	f_y:	60 KSI
13. STRUCTURAL STEEL AASHTO M270 (WEATHERING)	f_y:	50 KSI
14. SOIL UNIT WEIGHT	γ:	0.140 KCF
15. NOMINAL BEARING RESISTANCE OF SOIL	q_n:	4.0 KSF
16. SOIL BEARING RESISTANCE FACTOR (REFER TO AASHTO LRFD)	ϕ:	- - -
17. NOMINAL BEARING RESISTANCE OF ROCK	q_n:	10.0 KSF
18. ROCK BEARING RESISTANCE FACTOR (REFER TO AASHTO LRFD)	ϕ:	- - -
19. NOMINAL AXIAL PILE RESISTANCE	q_p:	346.0 KIPS
20. PILE YIELD STRENGTH ASTM A572	f_y:	50 KSI
21. PILE SIZE		HP 12X74
22. EST. PILE LENGTH	L_p:	77 FT
23. PILE RESISTANCE FACTOR	ϕ:	0.65
24. LATERAL PILE DEFLECTION	Δ:	0.37 INCH
25. BASIC WIND SPEED	V_{3s}:	- - -
26. MINIMUM GROUND SNOW LOAD	p_g:	- - -
27. SEISMIC DATA PGA: - - -	S_s:	- - -
	S_1:	- - -

LRFR LOAD RATING FACTORS

LOADING LEVELS	TRUCK						
	H-20	HL-93	3S2	6 AXLE	3A. STR.	4A. STR.	5A. SEMI
TONNAGE	20	36	36	66	30	34.5	38
INVENTORY ⚠	2.46	1.26					
POSTING							
OPERATING ⚠	3.19	1.63	2.63	1.74	2.26	2.03	2.22
COMMENTS:							

KEY	DATE	BY	REVISION
⚠	10/05/2015	VAOT	MODIFIED LRFR LOAD RATING FACTORS.

AS BUILT "REBAR" DETAIL

LEVEL I	LEVEL II	LEVEL III
TYPE:	TYPE:	TYPE:
GRADE:	GRADE:	GRADE:

TRAFFIC DATA

YEAR	ADT	DHV	% D	% T	ADTT
2013	1300	190	51	11.4	160
2033	1500	220	51	17.3	270

20 year ESAL for flexible pavement from 2013 to 2033 : 878000
40 year ESAL for flexible pavement from 2013 to 2053 : 2064000
Design Speed : 30 mph

TEMPORARY BRIDGE PROFILE ALONG TEMP CL

BOTTOM OF BEAMS ELEV. = 1414.00 FT

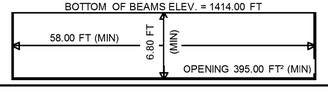

PILE DRIVING AND TESTING REQUIREMENTS

1. NOMINAL PILE DRIVING CAPACITY	Rndr:	346.00 KIP
2. PILE TEST RESISTANCE FACTOR	ϕ:	0.65
3. MINIMUM PILE TIP ELEVATION		1377.00 FT

4. ONE DYNAMIC PILE LOAD TEST REQUIRED PER ABUTMENT.

PROJECT NAME: **WARDSBORO**
PROJECT NUMBER: **BRF 013-1(15)**

FILE NAME:	s92b283pi.xls	PLOT DATE:	10/5/2015
PROJECT LEADER:	C. CARLSON	DRAWN BY:	R. PELLETT
DESIGNED BY:	D. PETERSON	CHECKED BY:	D. PETERSON
PRELIMINARY INFORMATION SHEET		SHEET	2 OF 51

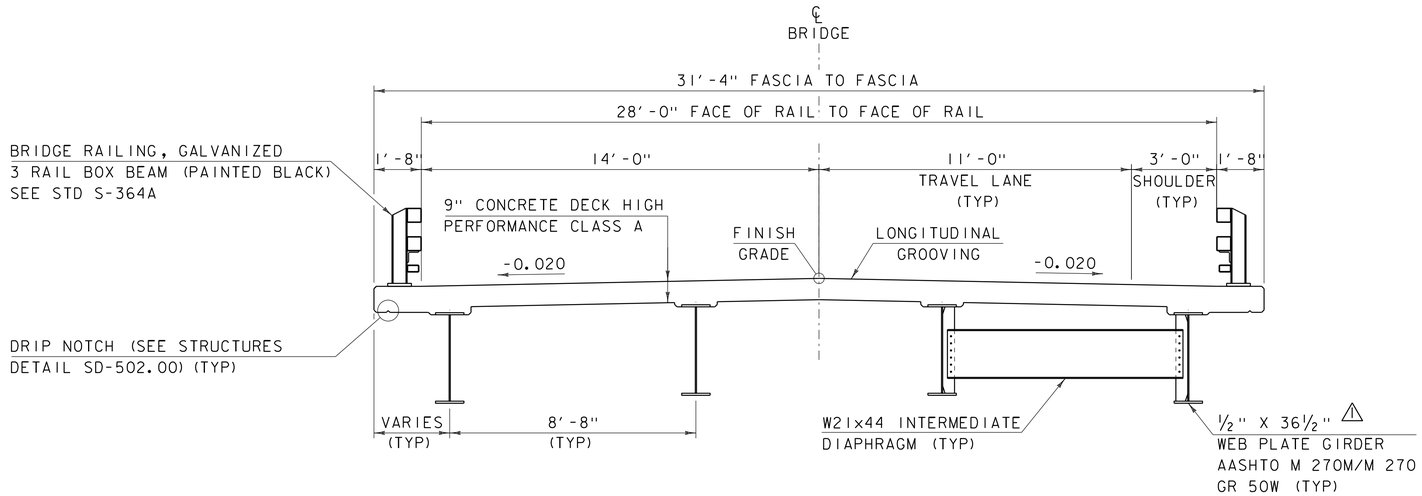

BRIDGE TYPICAL SECTION

SCALE: 3/8" = 1'-0"

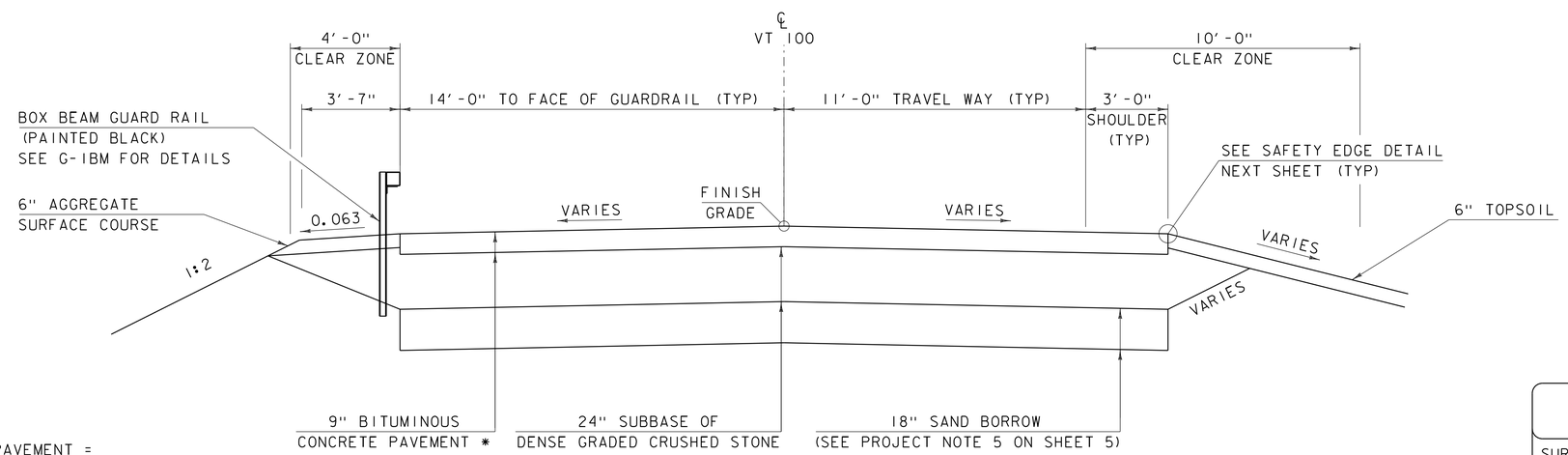

WITH GUARDRAIL

WITHOUT GUARDRAIL

ROADWAY TYPICAL SECTION

SCALE: 3/8" = 1'-0"

BITUMINOUS CONCRETE PAVEMENT = SPECIAL PROVISION (BITUMINOUS CONCRETE PAVEMENT, SMALL QUANTITY)

TACK COAT: EMULSIFIED ASPHALT IS TO BE APPLIED AT THE RATE OF 0.025 GAL/SY ON ALL COLD PLANED SURFACES AND BETWEEN SUCCESSIVE COURSES OF PAVEMENT AS DIRECTED BY THE ENGINEER.

* 1 1/2" TYPE IVS
OVER 1 1/2" TYPE IVS
OVER 3" TYPE IIS
OVER 3" TYPE IIS

MATERIAL TOLERANCES

(IF USED ON PROJECT)

SURFACE	
- PAVEMENT (TOTAL THICKNESS)	+/- 1/4"
- AGGREGATE SURFACE COURSE	+/- 1/2"
SUBBASE	+/- 1"
SAND BORROW	+/- 1"

KEY	DATE	BY	REVISION
⚠	10/05/2015	VAOT	MODIFIED ROLLED BEAM TO PLATE GIRDER.

PROJECT NAME: WARDSBORO
PROJECT NUMBER: BRF 013-1(15)

FILE NAME: s92b283typ.dgn
PROJECT LEADER: C. CARLSON
DESIGNED BY: D. PETERSON
TYPICAL SECTIONS 1

PLOT DATE: 06-OCT-2015
DRAWN BY: R. PELLETT
CHECKED BY: D. PETERSON
SHEET 3 OF 51

STATE OF VERMONT
AGENCY OF TRANSPORTATION

QUANTITY SHEET 1

SUMMARY OF ESTIMATED QUANTITIES				TOTALS		DESCRIPTIONS			
ROADWAY	EROSION CONTROL	BRIDGE	FULL C.E. ITEMS	GRAND TOTAL	FINAL	UNIT	ITEMS	ITEM NUMBER	ROUND
1				1		LS	CLEARING AND GRUBBING, INCLUDING INDIVIDUAL TREES AND STUMPS	201.10	
1860				1860		CY	COMMON EXCAVATION	203.15	
780				780		CY	UNCLASSIFIED CHANNEL EXCAVATION	203.27	
350				350		CY	SAND BORROW	203.31	
484				484		CY	TRENCH EXCAVATION OF EARTH	204.20	
28				28		CY	TRENCH EXCAVATION OF ROCK	204.21	
1				1		CY	TRENCH EXCAVATION OF EARTH, EXPLORATORY (N.A.B.I.)	204.22	
		410		410		CY	STRUCTURE EXCAVATION	204.25	
290		205		495		CY	GRANULAR BACKFILL FOR STRUCTURES	204.30	
470				470		SY	COLD PLANING, BITUMINOUS PAVEMENT	210.10	
960				960		CY	SUBBASE OF DENSE GRADED CRUSHED STONE	301.35	
15				15		CY	AGGREGATE SURFACE COURSE	401.10	
17				17		CWT	EMULSIFIED ASPHALT	404.65	
1				1		LU	PRICE ADJUSTMENT, ASPHALT CEMENT (N.A.B.I.)	406.50	
		121		121		CY	CONCRETE, HIGH PERFORMANCE CLASS A	501.33	
		135		135		CY	CONCRETE, HIGH PERFORMANCE CLASS B	501.34	
		1		1		LS	FURNISHING EQUIPMENT FOR DRIVING PILING	504.10	
		770		770		LF	STEEL PILING, HP 12 X 74	505.16	
		2		2		EACH	DYNAMIC PILE LOADING TEST	505.45	
		44026 △1		44026 △1		LB	STRUCTURAL STEEL, PLATE GIRDER	506.55 △1	
		6065		6065		LB	REINFORCING STEEL, LEVEL I	507.11	
		33364		33364		LB	REINFORCING STEEL, LEVEL II	507.12	
		1		1		LS	SHEAR CONNECTORS (824 - 7/8" x 7")	508.15	
		217		217		SY	LONGITUDINAL DECK GROOVING	509.10	
		10		10		GAL	WATER REPELLENT, SILANE	514.10	
		63		63		LF	BRIDGE EXPANSION JOINT, ASPHALTIC PLUG	516.10	
		63		63		LF	JOINT SEALER, HOT POURED	524.11	
		146		146		LF	BRIDGE RAILING, GALVANIZED 3 RAIL BOX BEAM (PAINTED BLACK)	525.335	
1				1		LS	TWO-WAY TEMPORARY BRIDGE (1630 SF)	528.11	
1				1		EACH	REMOVAL OF STRUCTURE (2112 SF - EST.)	529.15	
		8		8		EACH	BEARING DEVICE ASSEMBLY, STEEL REINFORCED ELASTOMERIC PAD	531.17	
							BEGIN OPTION AA		
245				245		LF	18" CAAP .105 (2-2/3 X 1/2)	601.0217	
245				245		LF	18" PCCSP .064 (2-2/3 X 1/2)	601.0415	
245				245		LF	18" CPEP	601.0915	
							END OPTION AA		
3				3		EACH	PRECAST REINFORCED CONCRETE DROP INLET WITH CAST IRON GRATE	604.18	
850				850		CY	STONE FILL, TYPE IV	613.13	
20				20		LF	BOX BEAM GUARDRAIL (PAINTED BLACK)	621.30	
4				4		EACH	GUARDRAIL APPROACH SECTION, GALVANIZED 3 RAIL BOX BEAM (PAINTED BLACK)	621.725	

DETAILED SUMMARY OF QUANTITIES

QUANTITIES	UNIT	ITEMS
		* N.A.B.I. - NOT A BID ITEM
		EARTHWORKS SUMMARY
		FILL AVAILABLE
1860	CY	COMMON EXCAVATION (1,860 x 1.0)
234	CY	UNCLASSIFIED CHANNEL EXCAVATION (780 x 0.3)
123	CY	STRUCTURE EXCAVATION (410 x 0.3)
306	CY	TRENCH EXCAVATION OF EARTH (340 x 0.9)
7	CY	ROUNDING
2530	**CY**	**TOTAL FILL AVAILABLE**
10	**CY**	**TOTAL FILL REQUIRED (EST.)**
2520	**CY**	**TOTAL WASTE**

KEY	DATE	BY	REVISION
△1	10/05/2015	VAOT	MODIFIED PAY ITEM NO AND QUANTITY.

PROJECT NAME: WARDSBORO
PROJECT NUMBER: BRF 013-1(15)

FILE NAME: s92b283qs.dgn
PROJECT LEADER: C. CARLSON
DESIGNED BY: D. PETERSON
QUANTITY SHEET 1

PLOT DATE: 06-OCT-2015
DRAWN BY: D. KARABEGOVIC
CHECKED BY: D. PETERSON
SHEET 6 OF 51

STATE OF VERMONT
AGENCY OF TRANSPORTATION

BRIDGE QUANTITY SHEET 1

SUMMARY OF BRIDGE QUANTITIES				TOTALS	DESCRIPTIONS		
APPROACH SLAB #1	APPROACH SLAB #2	SUPERSTRUCTURE	ABUTMENT #1	ABUTMENT #2	BRIDGE TOTAL	UNIT	ITEMS	ITEM NUMBER
			200	210	410	CY	STRUCTURE EXCAVATION	204.25
			100	105	205	CY	GRANULAR BACKFILL FOR STRUCTURES	204.30
		77	22	22	121	CY	CONCRETE, HIGH PERFORMANCE CLASS A	501.33
26	26		42	41	135	CY	CONCRETE, HIGH PERFORMANCE CLASS B	501.34
			0.5	0.5	1	LS	FURNISHING EQUIPMENT FOR DRIVING PILING	504.10
			385	385	770	LF	STEEL PILING, HP 12 X 74	505.16
			1	1	2	EACH	DYNAMIC PILE LOADING TEST	505.45
		44026 △1			44026 △1	LB	STRUCTURAL STEEL, PLATE GIRDER	506.55 △1
3075	2990				6065	LB	REINFORCING STEEL, LEVEL I	507.11
		16889	8270	8205	33364	LB	REINFORCING STEEL, LEVEL II	507.12
		1			1	LS	SHEAR CONNECTORS (824 - 7/8" x 7")	508.15
		217			217	SY	LONGITUDINAL DECK GROOVING	509.10
		5	2.5	2.5	10	GAL	WATER REPELLENT, SILANE	514.10
		63			63	LF	BRIDGE EXPANSION JOINT, ASPHALTIC PLUG	516.10
		63			63	LF	JOINT SEALER, HOT POURED	524.11
		146			146	LF	BRIDGE RAILING, GALVANIZED 3 RAIL BOX BEAM (PAINTED BLACK)	525.335
			4	4	8	EACH	BEARING DEVICE ASSEMBLY, STEEL REINFORCED ELASTOMERIC PAD	531.17

DETAILED SUMMARY OF QUANTITIES		
QUANTITIES	UNIT	ITEMS

KEY	DATE	BY	REVISION
△1	10/05/2015	VAOT	MODIFIED PAY ITEM NO AND QUANTITY.

PROJECT NAME: WARDSBORO
PROJECT NUMBER: BRF 013-1(15)

FILE NAME: s92b283qs.dgn
PROJECT LEADER: C. CARLSON
DESIGNED BY: D. PETERSON
BRIDGE QUANTITY SHEET

PLOT DATE: 06-OCT-2015
DRAWN BY: D. KARABEGOVIC
CHECKED BY: D. PETERSON
SHEET 9 OF 51

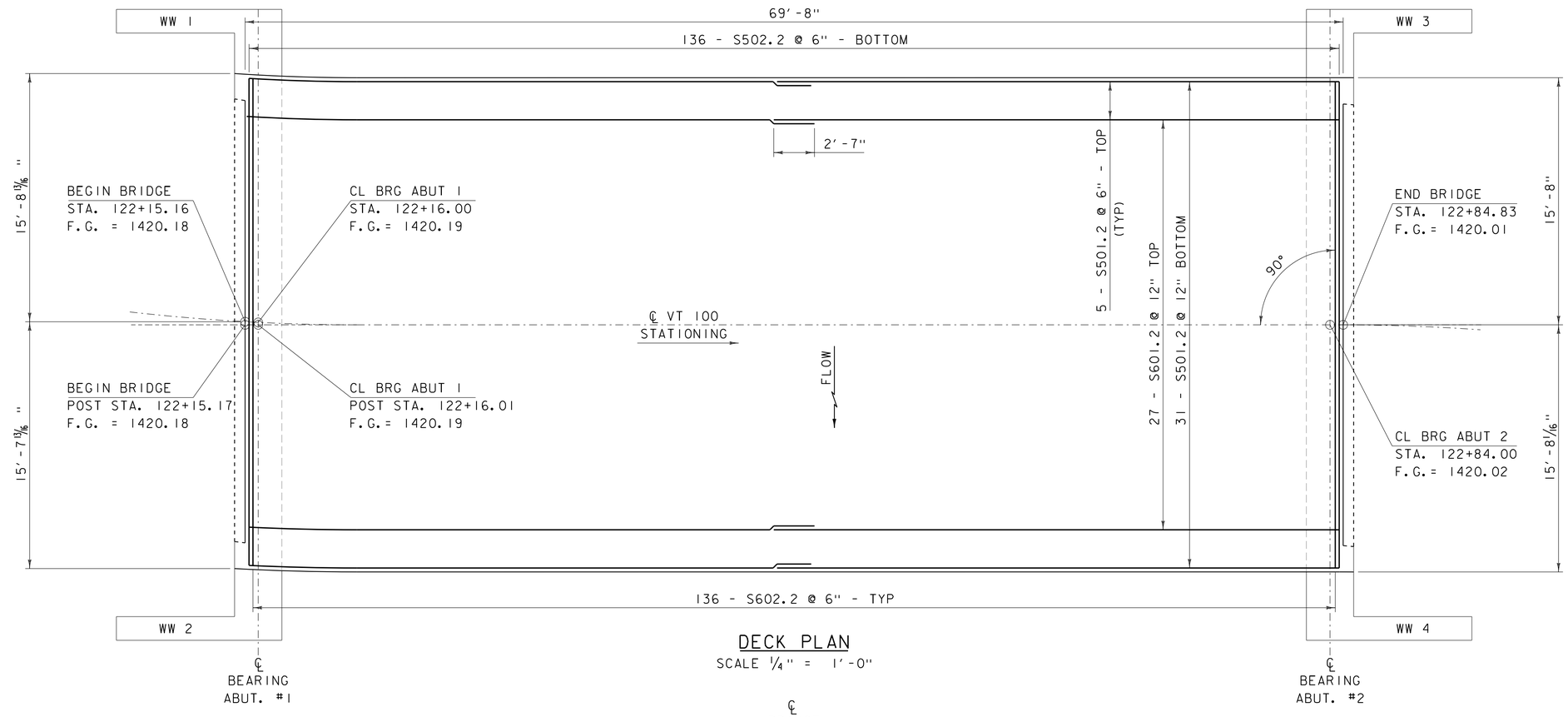

DECK PLAN

SCALE 1/4" = 1'-0"

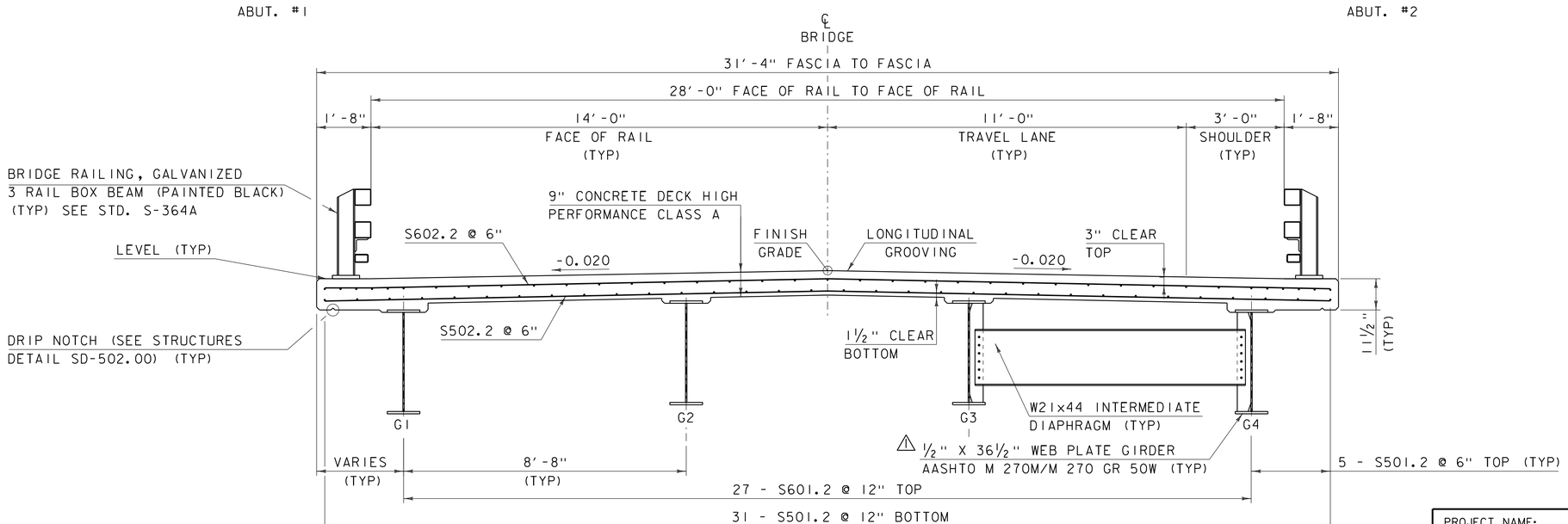

DECK TYPICAL

SCALE 1/2" = 1'-0"

NOTE:

NF = NEAR FACE
FF = FAR FACE
EF = EACH FACE
▲ = CUT TO FIT IN FIELD
3" CLEAR, UNLESS OTHERWISE SPECIFIED ON THE PLANS.
2'-2" BAR LAP UNLESS OTHERWISE SPECIFIED ON THE PLANS.

KEY	DATE	BY	REVISION
1	10/05/2015	VAOT	MODIFIED ROLLED BEAM TO PLATE GIRDER.

PROJECT NAME: WARDSBORO
PROJECT NUMBER: BRF 013-1(15)

FILE NAME: s92b283sup.dgn
PROJECT LEADER: C. CARLSON
DESIGNED BY: D. PETERSON
DECK REINFORCING PLAN & TYPICAL

PLOT DATE: 06-OCT-2015
DRAWN BY: R. PELLETT
CHECKED BY: D. PETERSON
SHEET 25 OF 51

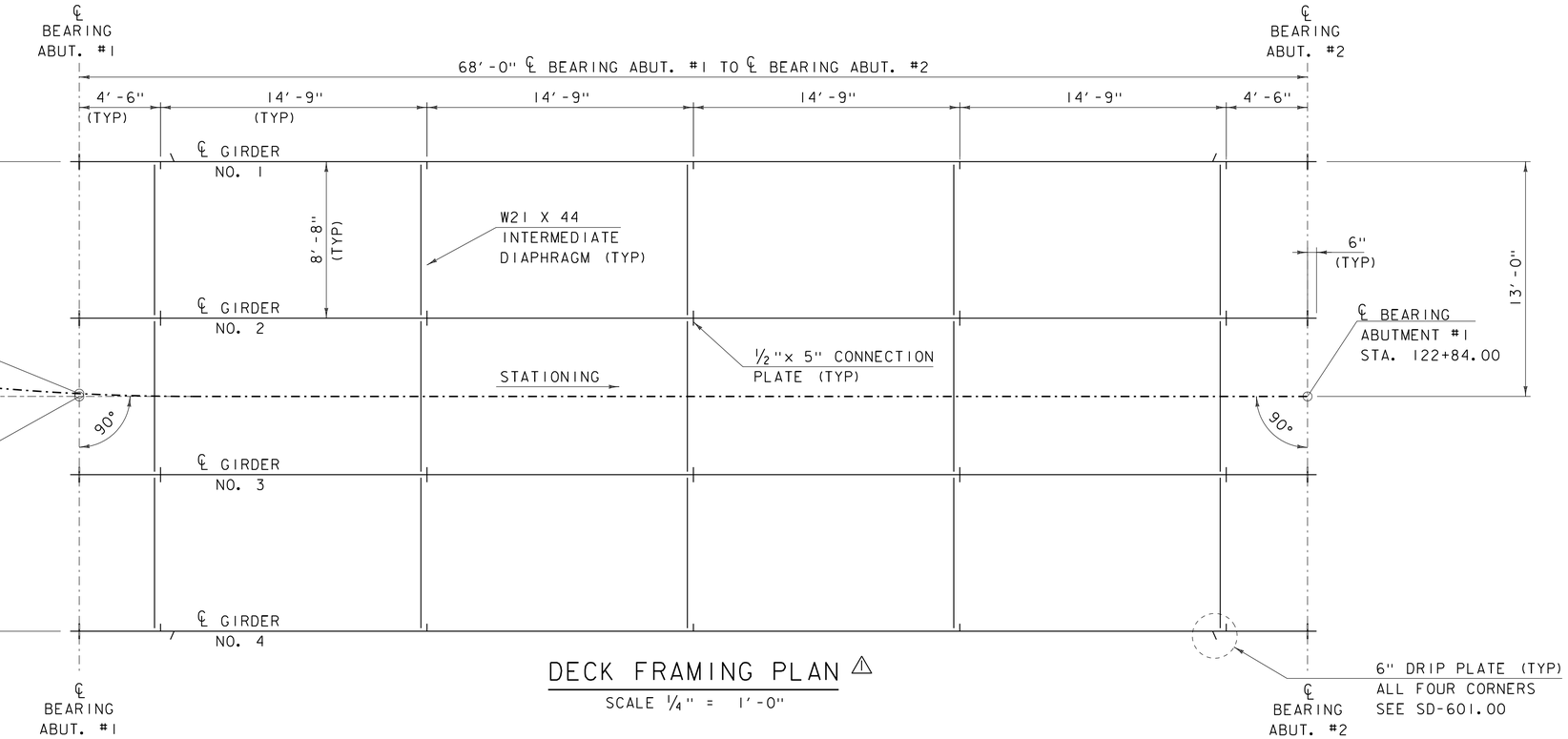

DECK FRAMING PLAN ⚠

SCALE ¼" = 1'-0"

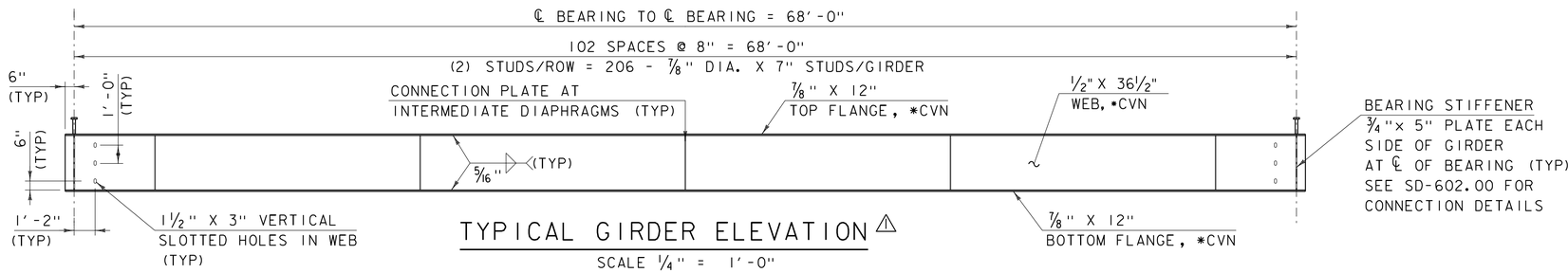

TYPICAL GIRDER ELEVATION ⚠

SCALE ¼" = 1'-0"

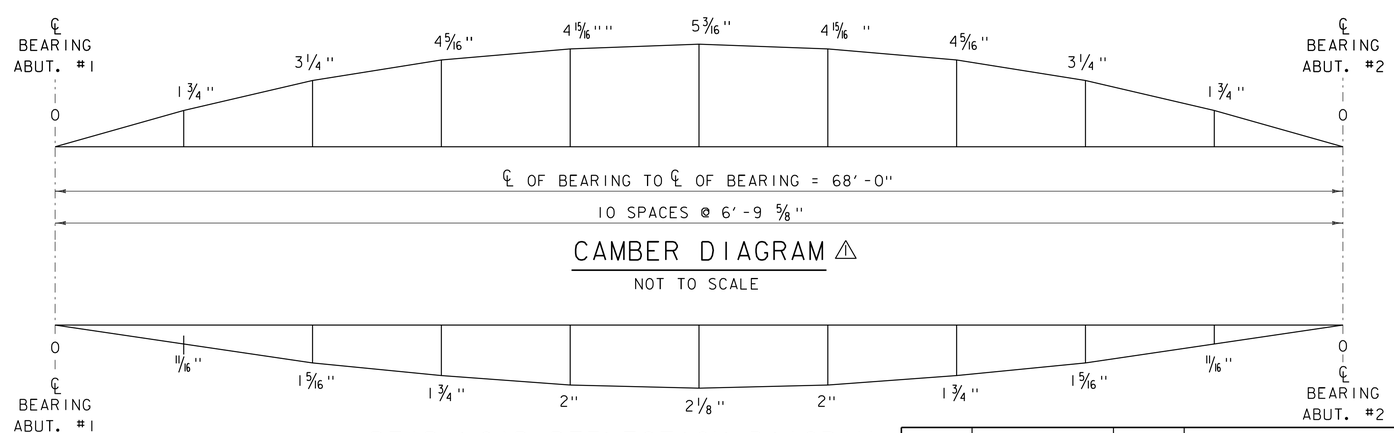

CAMBER DIAGRAM ⚠

NOT TO SCALE

DEAD LOAD DEFLECTION DIAGRAM

NOT TO SCALE

⚠ NOTE:
*CVN - SHALL MEET CHARPY V-NOTCH REQUIREMENTS FOR MAIN MEMBERS AS INDICATED IN SECTION 714 OF THE STANDARD SPECIFICATION.
DEAD LOAD DEFLECTION INCLUDES: GIRDER, DIAPHRAGMS, DECK & BRIDGE RAIL.

KEY	DATE	BY	REVISION
⚠	10/05/2015	VAOT	MODIFIED ROLLED BEAM TO PLATE GIRDER.

PROJECT NAME: WARDSBORO
PROJECT NUMBER: BRF 013-1(15)

FILE NAME: s92b283sup.dgn
PROJECT LEADER: C. CARLSON
DESIGNED BY: D. PETERSON
DECK FRAMING PLAN

PLOT DATE: 08-OCT-2015
DRAWN BY: D. KARABEGOVIC
CHECKED BY: D. PETERSON
SHEET 26 OF 51

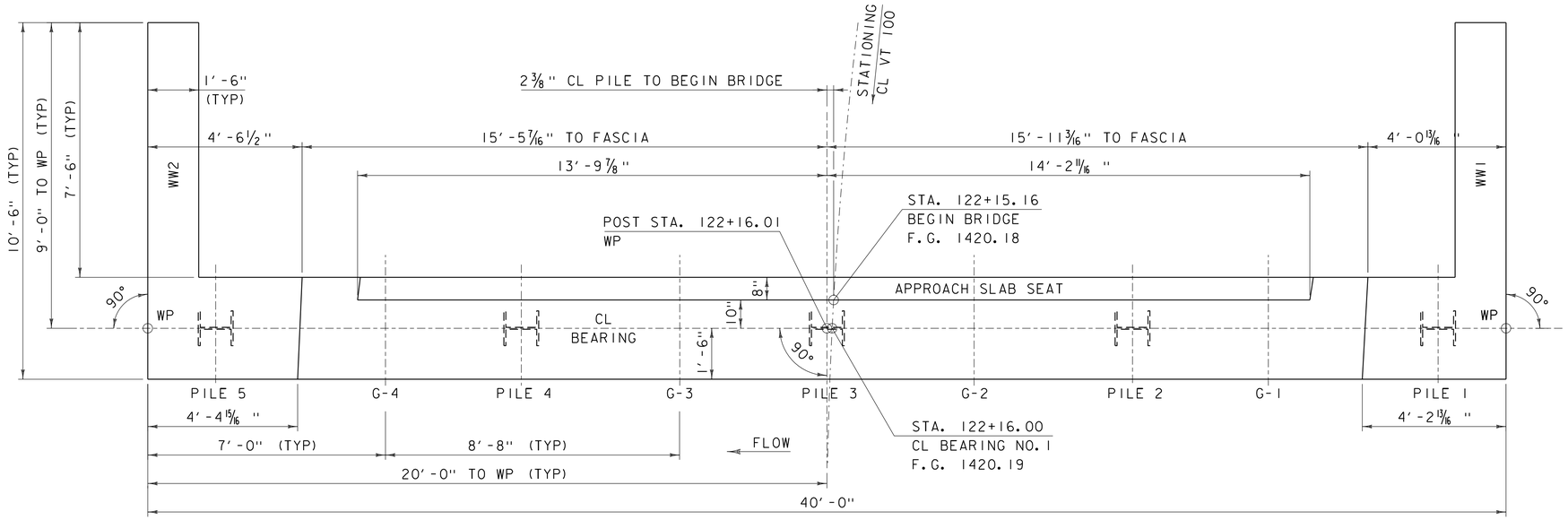

INTEGRAL ABUTMENT NO. 1 PLAN

SCALE 1/2" = 1'-0

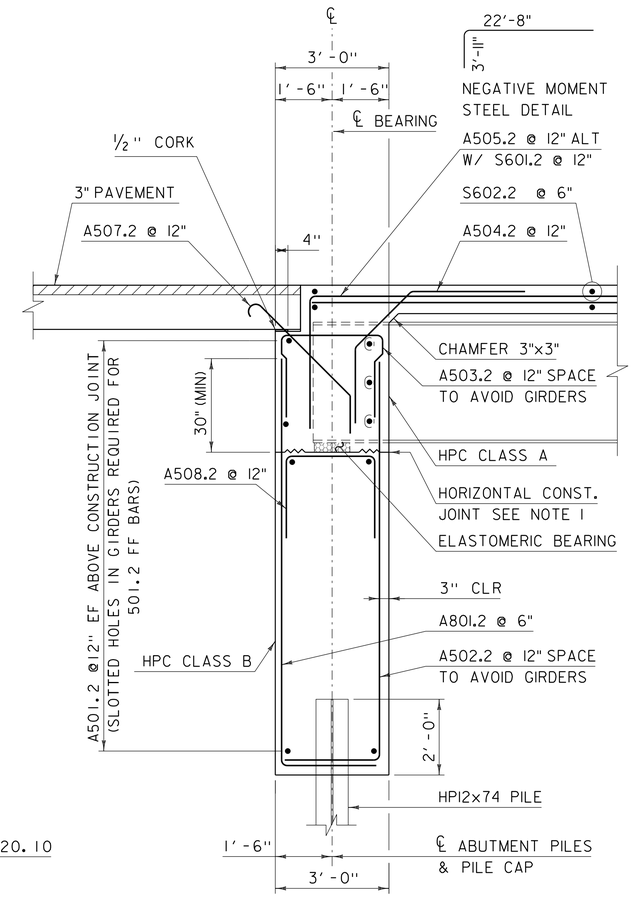

ABUTMENT 1 & 2 TYPICAL ⚠

SCALE: 1/2" = 1'-0"

1) HORIZONTAL CONSTRUCTION JOINT SHALL SHALL BE ROUGHENED AS SHOWN IN STRUCTURES DETAIL SHEET SD-501.00. SURFACE SHALL BE ROUGHENED TO WITHIN 3" OF EACH FACE OF CONCRETE AND WITHIN 3" OF ELASTOMERIC BEARING PADS. SURFACE UNDER EACH BEARING PAD SHALL REMAIN SMOOTH.

2) SEE STRUCTURES DETAIL SHEET SD-502.00 FOR BRIDGE PLAQUE DETAILS.

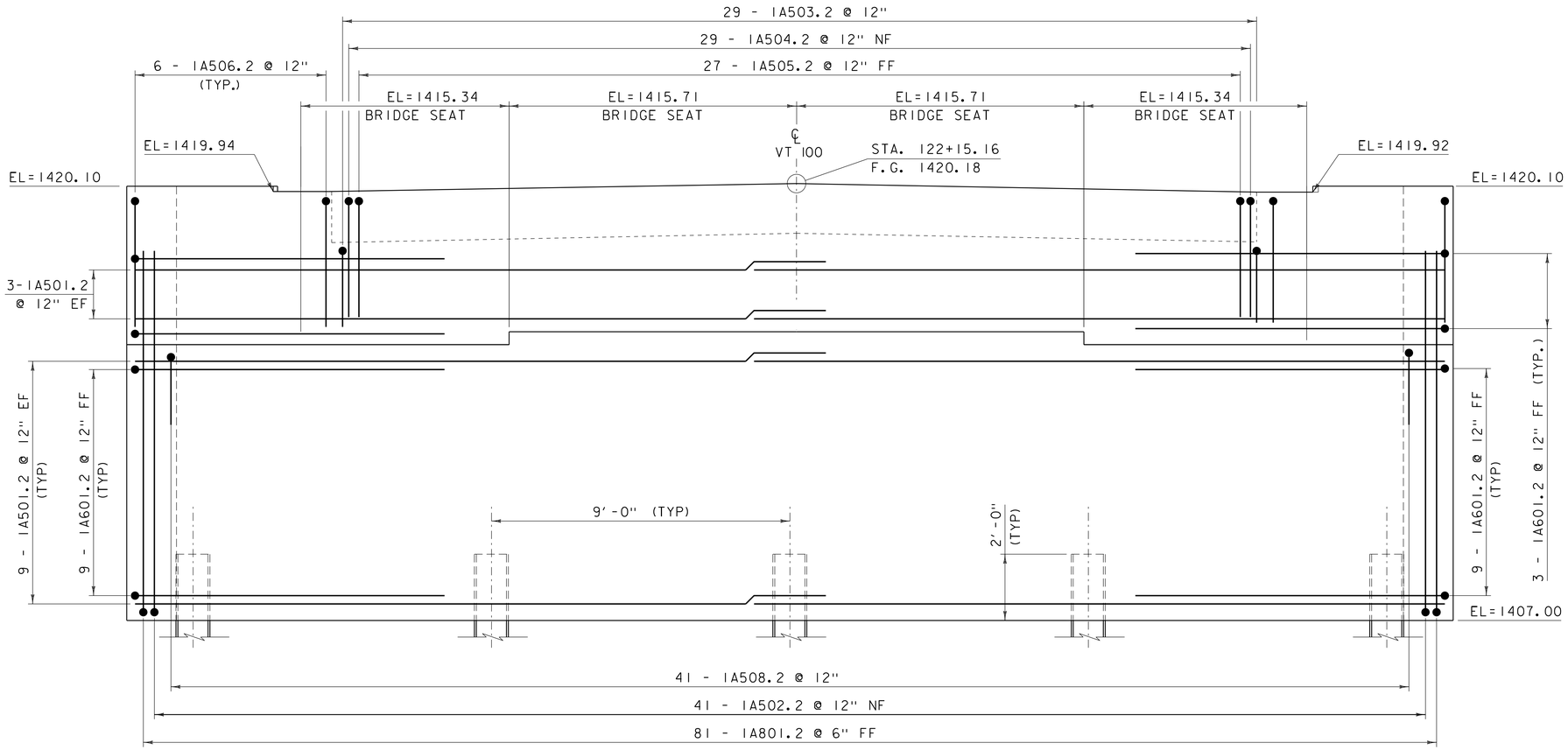

INTEGRAL ABUTMENT NO. 1 ELEVATION

SCALE 1/2" = 1'-0

NOTE:

NF = NEAR FACE
FF = FAR FACE
EF = EACH FACE
▲ = CUT TO FIT IN FIELD
3" CLEAR, UNLESS OTHERWISE SPECIFIED ON THE PLANS.
2'-2" BAR LAP UNLESS OTHERWISE SPECIFIED ON THE PLANS.

KEY	DATE	BY	REVISION
⚠	10/05/2015	VAOT	MODIFIED ROLLED BEAM TO PLATE GIRDER.

PROJECT NAME: WARDSBORO
PROJECT NUMBER: BRF 013-1(15)

FILE NAME: s92b283sub.dgn
PROJECT LEADER: C. CARLSON
DESIGNED BY: D. PETERSON
ABUTMENT #1 PLAN & ELEVATION

PLOT DATE: 06-OCT-2015
DRAWN BY: R. PELLETT
CHECKED BY: D. PETERSON
SHEET 28 OF 51

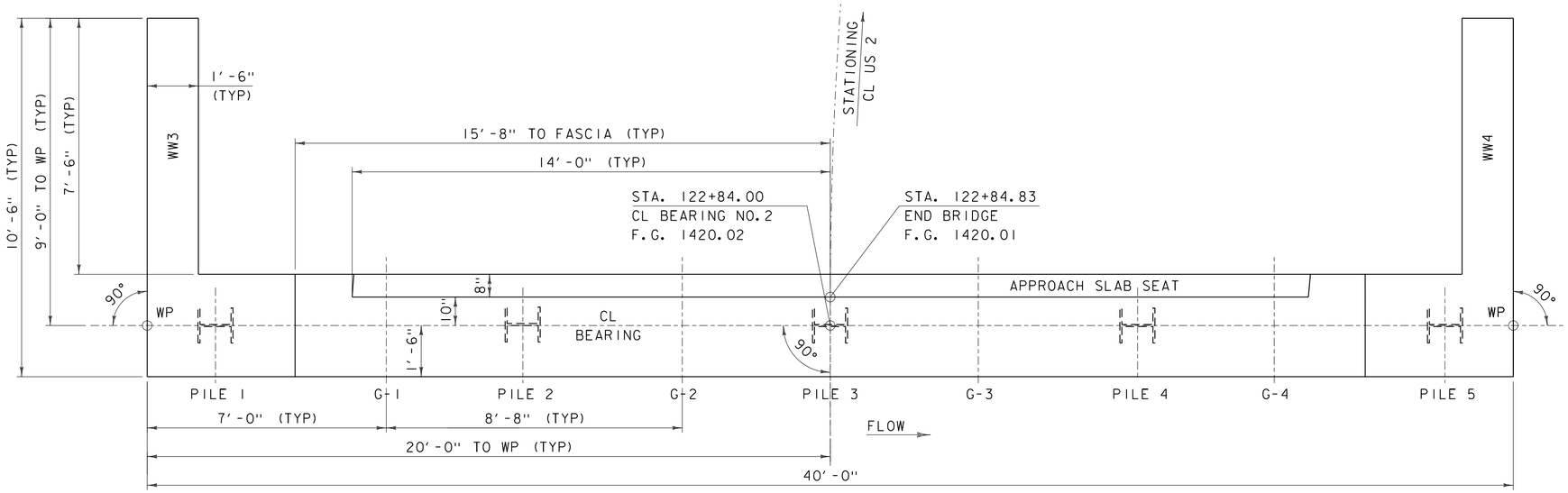

INTEGRAL ABUTMENT NO. 2 PLAN

SCALE 1/2" = 1'-0

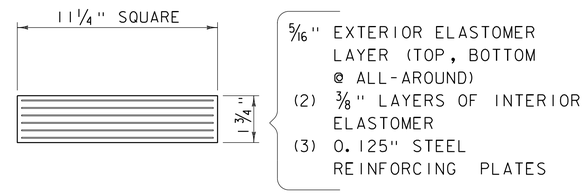

ELASTOMERIC BEARING PAD DETAIL △1

NOT TO SCALE

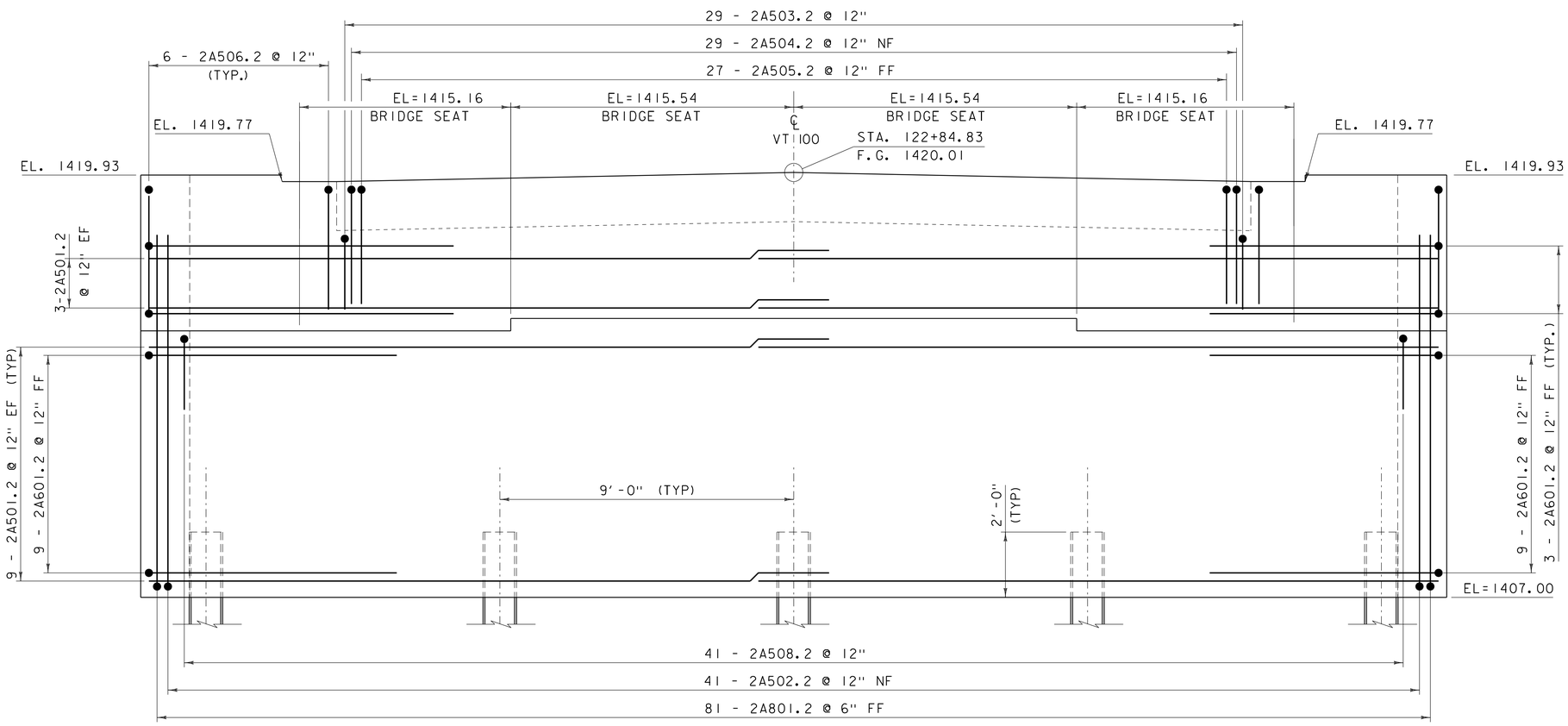

INTEGRAL ABUTMENT NO. 2 ELEVATION

SCALE 1/2" = 1'-0

NOTE:

NF = NEAR FACE
FF = FAR FACE
EF = EACH FACE
▲ = CUT TO FIT IN FIELD
3" CLEAR, UNLESS OTHERWISE SPECIFIED ON THE PLANS.
2'-2" BAR LAP UNLESS OTHERWISE SPECIFIED ON THE PLANS.

KEY	DATE	BY	REVISION
△1	10/05/2015	VAOT	MODIFIED BEARING THICKNESS

PROJECT NAME: WARDSBORO
PROJECT NUMBER: BRF 013-1(15)

FILE NAME: s92b283sub.dgn
PROJECT LEADER: C. CARLSON
DESIGNED BY: D. PETERSON
ABUTMENT #2 PLAN & ELEVATION AND BEARING DETAIL

PLOT DATE: 07-OCT-2015
DRAWN BY: R. PELLETT
CHECKED BY: D. PETERSON
SHEET 29 OF 51