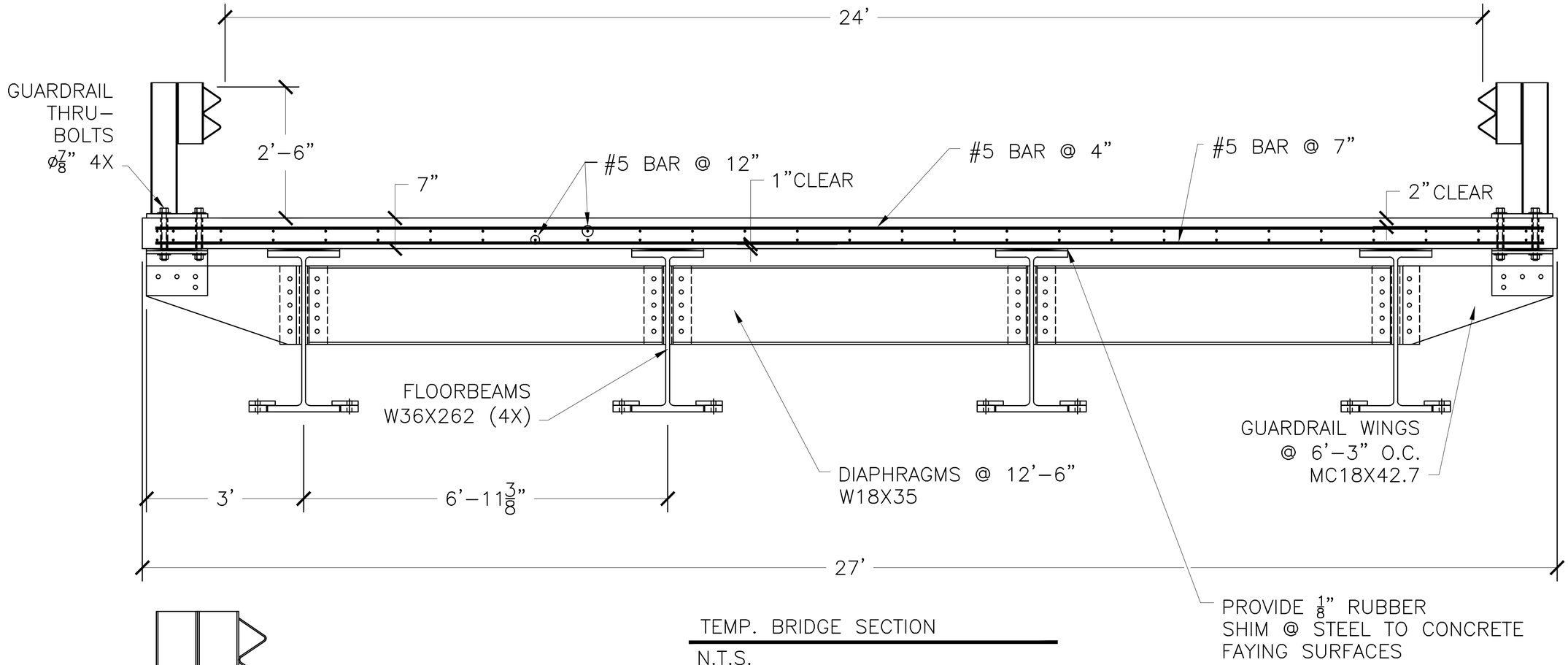

TEMP. BRIDGE SECTION

N.T.S.

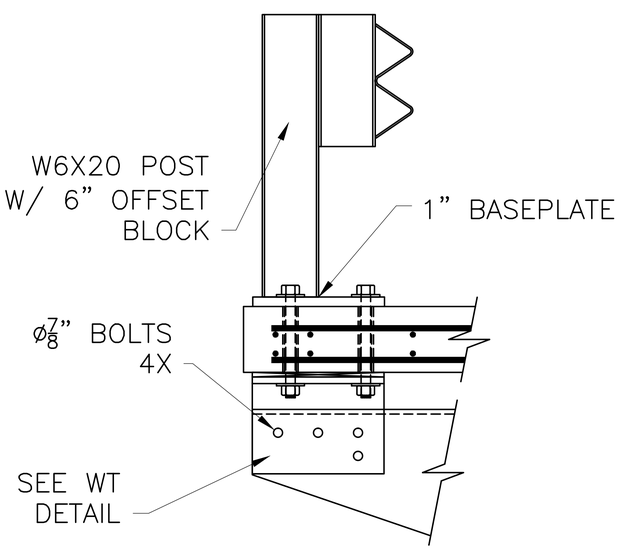

GUARDRAIL/SLAB CONN. DETAIL

N.T.S

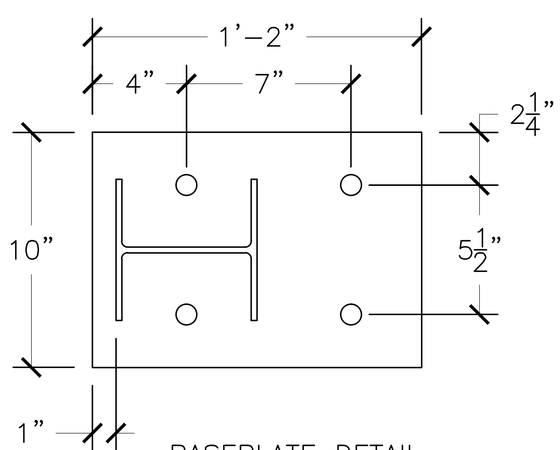

BASEPLATE DETAIL

N.T.S.

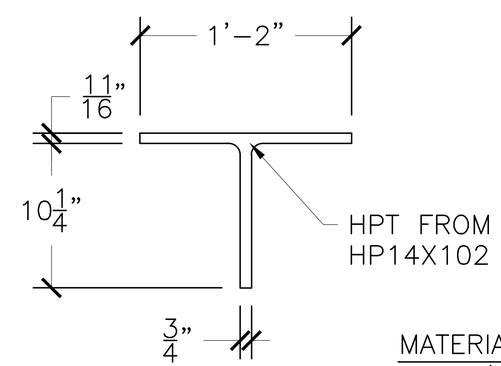

WT DETAIL

N.T.S.

MATERIAL NOTES:

1) REBAR TO BE GR. 60 MIN.
2) CONCRETE TO BE 5,000 PSI MIN.

REV. NO.	DATE:

RENAUD BROS. INC.
283 FT. BRIDGEMAN RD. VERNON VT., 05354
PH. (802) 257-7583 FAX: (802) 257-7308

SHEET NAME: TEMPORARY BRIDGE SECTION

PROJECT NAME: WARDSBORO

PROJECT NO: BRF 013-1 (15)

DRAWN BY: CE | CHK'D BY: | DATE: 09/28/2015

SHEET NO. 1 OF 8

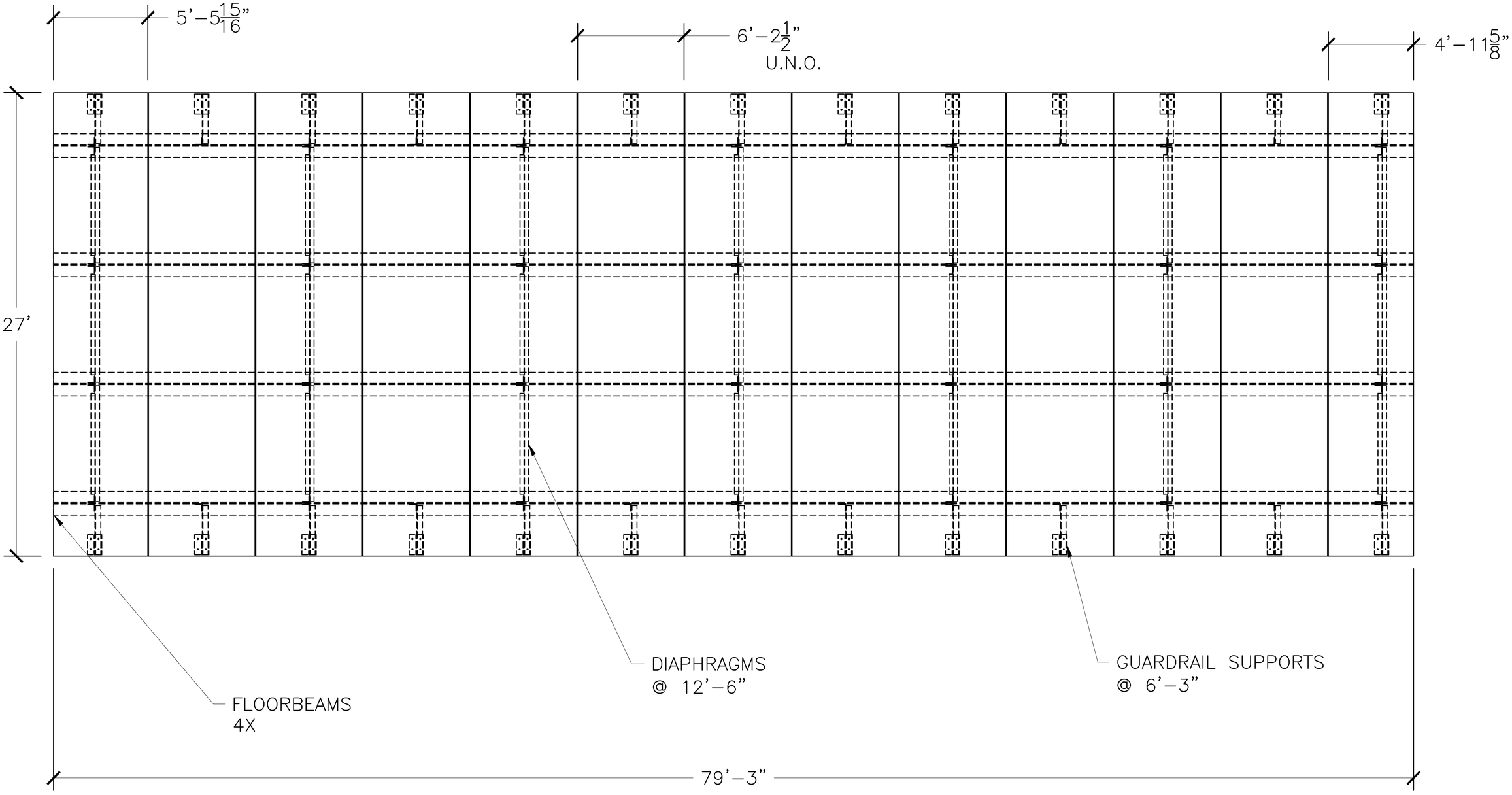

BRIDGE FRAMING PLAN
NOT TO SCALE

REV. NO.	DATE:

RENAUD BROS. INC.
283 FT. BRIDGEMAN RD. VERNON VT., 05354
PH. (802) 257-7583 FAX: (802) 257-7308

SHEET NAME: TEMPORARY BRIDGE PLAN
PROJECT NAME: WARDSBORO
PROJECT NO: BRF 013-1 (15)
DRAWN BY: CE
CHK'D BY:
DATE: 09/28/2015
SHEET NO. 2 OF 8

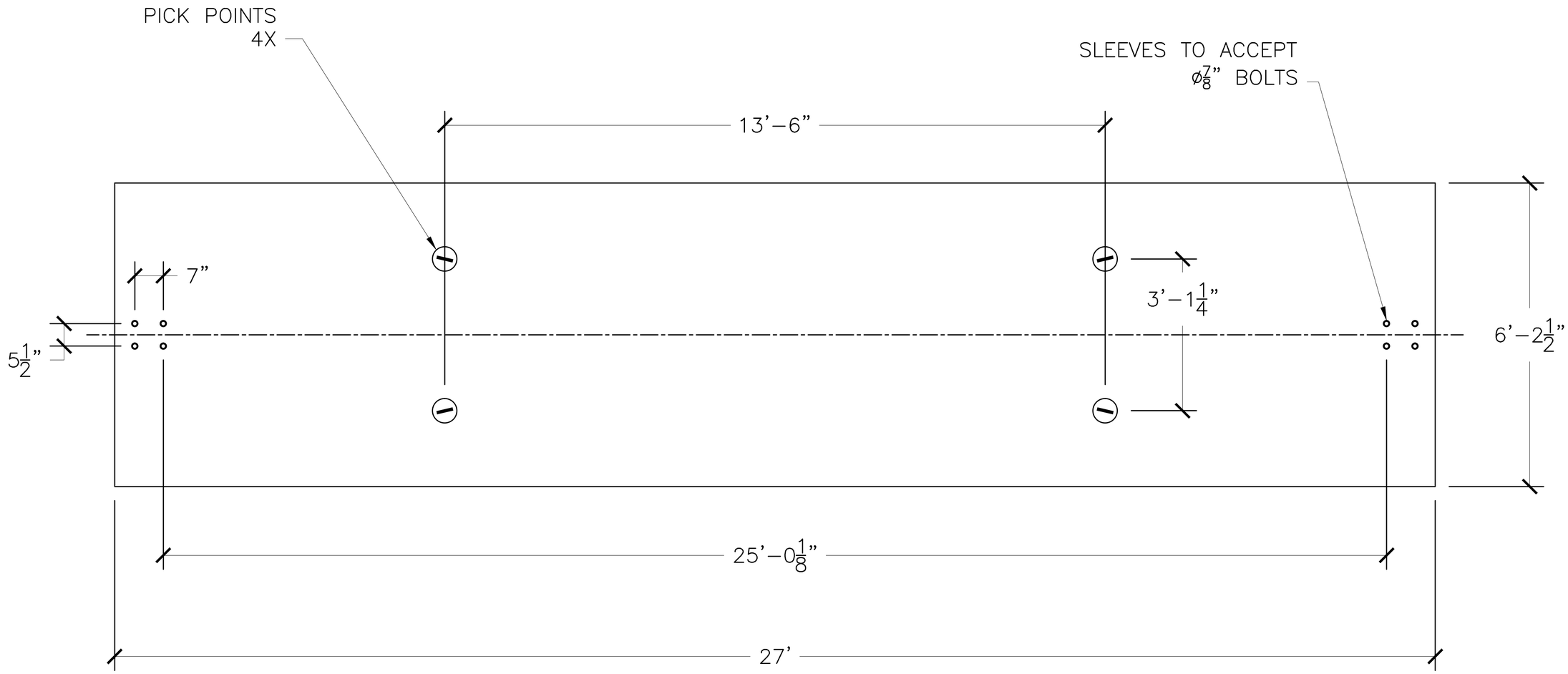

SLAB PLAN-VIEW
NOT TO SCALE

NOTE:
POCKETS TO BE FILLED WITH LOW STRENGTH GROUT OR FLOWABLE FILL AFTER INSTALLATION.

REV. NO.	DATE:

RENAUD BROS. INC.
283 FT. BRIDGEMAN RD. VERNON VT., 05354
PH. (802) 257-7583 FAX: (802) 257-7308

SHEET NAME: TEMPORARY BRIDGE SLAB PLAN
PROJECT NAME: WARDSBORO
PROJECT NO: BRF 013-1 (15)
DRAWN BY: CE
CHK'D BY:
DATE: 09/28/2015
SHEET NO. 3 OF 8

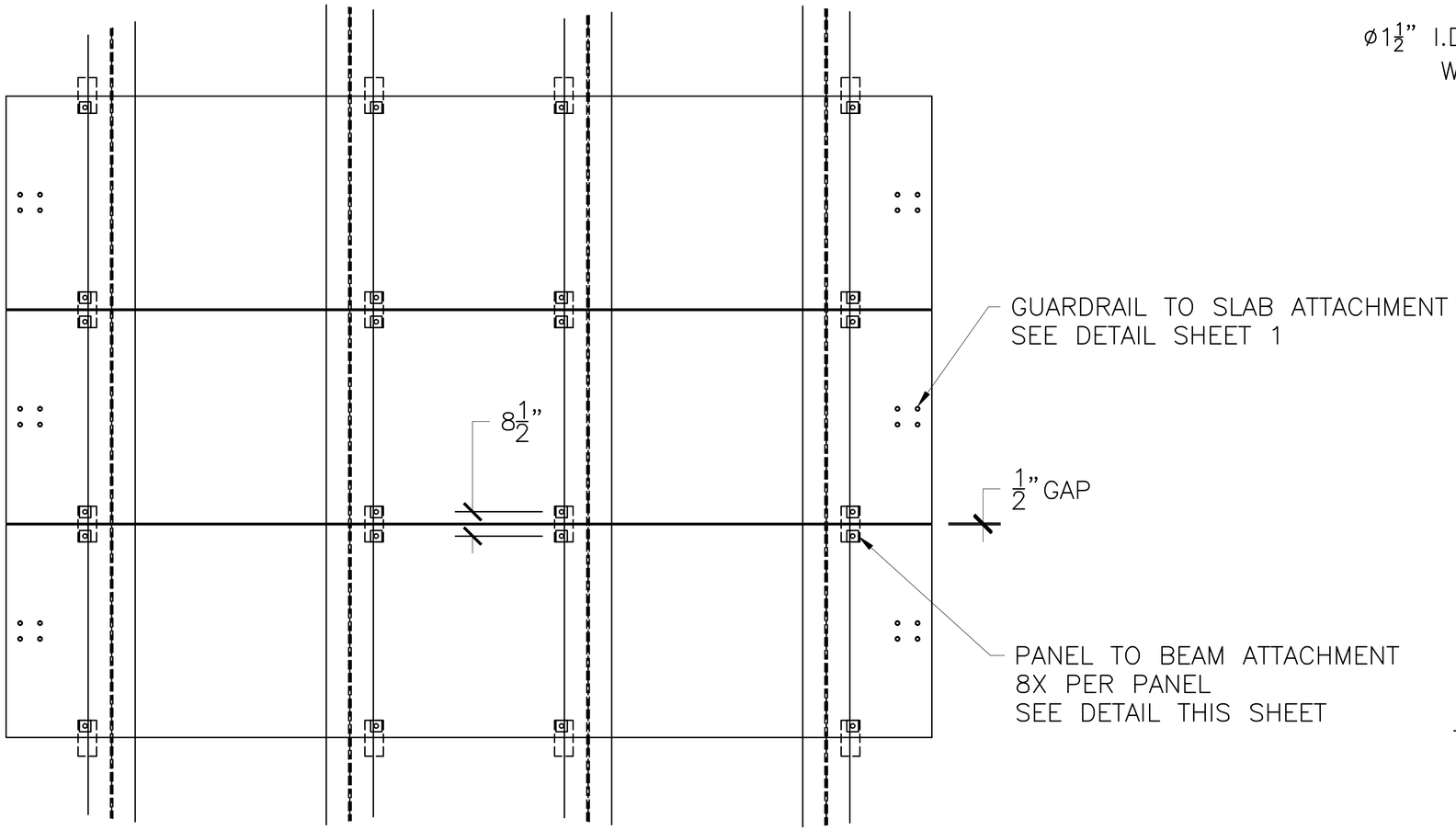

PANEL ATTACHMENT PLAN

ATTACHMENT IS DESIGNED TO ATTACH PANELS TO BEAMS, & PANELS TO EACH OTHER.

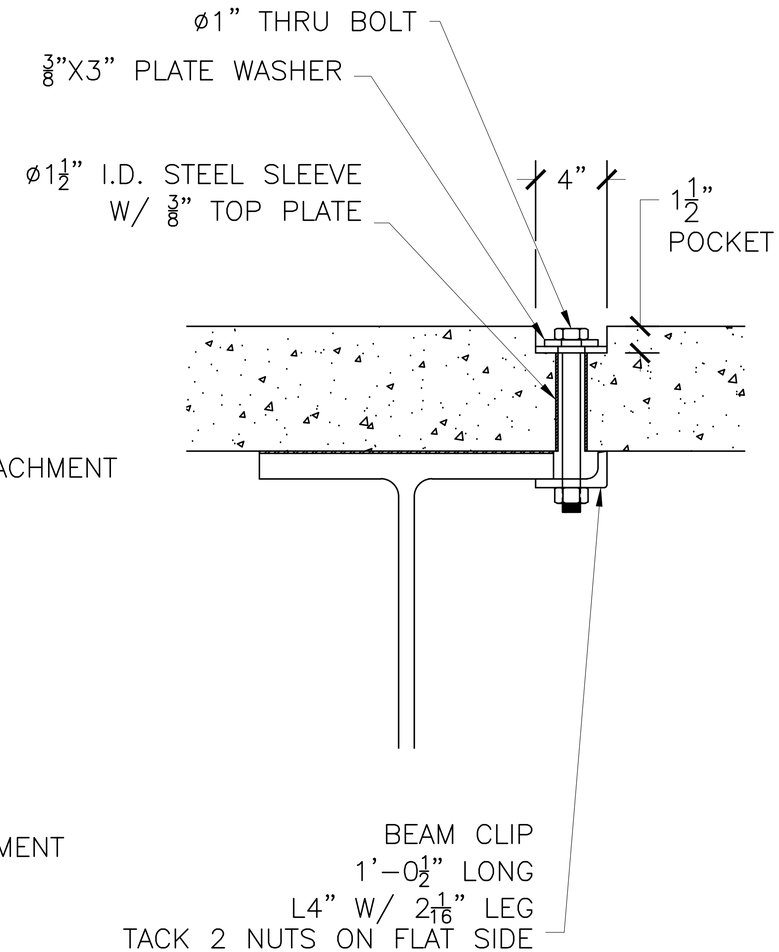

ATTACHMENT SECTION DETAIL

NOTE:

POCKETS TO BE FILLED WITH LOW STRENGTH GROUT OR FLOWABLE FILL AFTER INSTALLATION.

REV. NO.	DATE:

BRENAUD BROS. INC.
285 FT. BRIDGEMAN RD. VERNON VT., 05354
PH. (802) 257-7583 FAX: (802) 257-7308

SHEET NAME: SLAB ATTACHMENT DETAILS

PROJECT NAME: WARDSBORO

PROJECT NO: BRF 013-1 (15)

DRAWN BY: CE | CHK'D BY: | DATE: 09/28/2015

SHEET NO. 4 OF 8

MATERIALS FOR FOOTING AND STEM WALL:

CONCRETE FOR FOOTING AND STEM WALL
TO BE HP CLASS B WITH 3,500 PSI 28-DAY COMPRSSIVE STRENGTH

REINFORCING STEEL TO HAVE Fb= 60 KSI

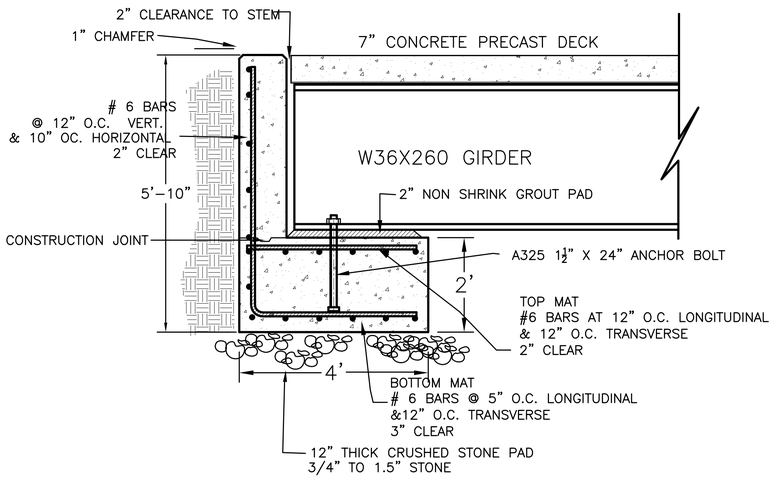

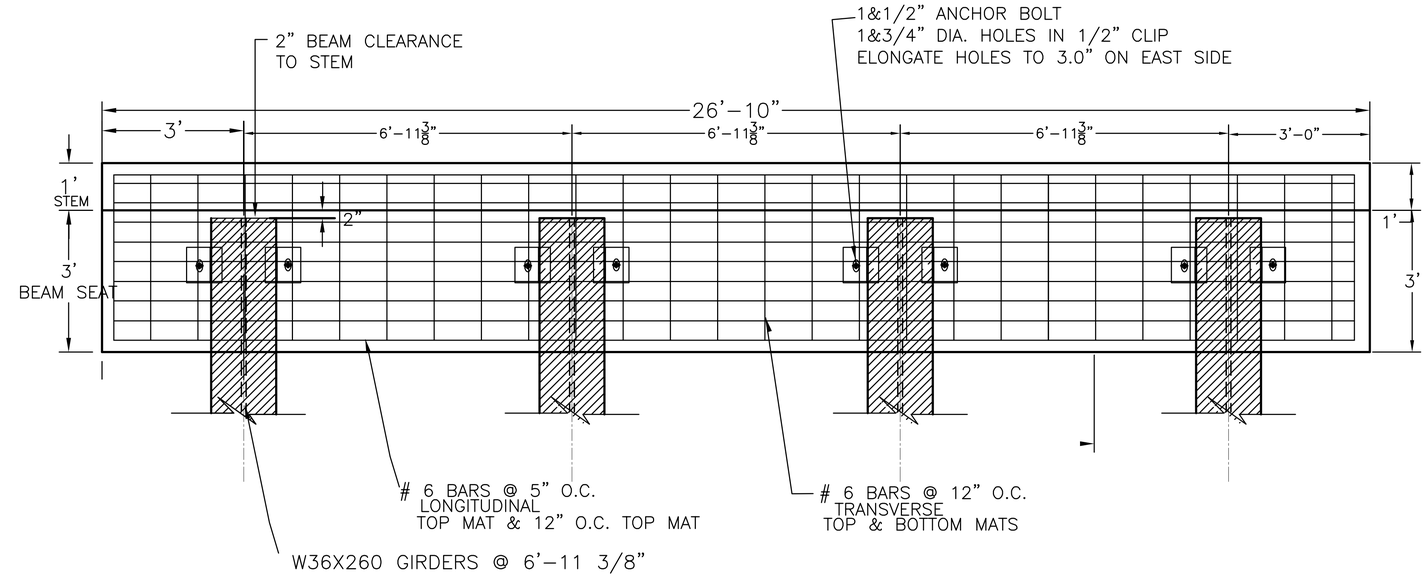

REV. NO.	DATE:

RENAUD BROS. INC.
283 FT. BRIDGEMAN RD. VERNON VT., 05354
PH. (802) 257-7583 FAX: (802) 257-7308

SHEET NAME: BRIDGE ABUTMENT DETAILS

PROJECT NAME: WARDSBORO

PROJECT NO: BRF 013-1 (15)

DRAWN BY: CE | CHK'D BY: | DATE: 09/28/2015

SHEET NO. 5 OF 8

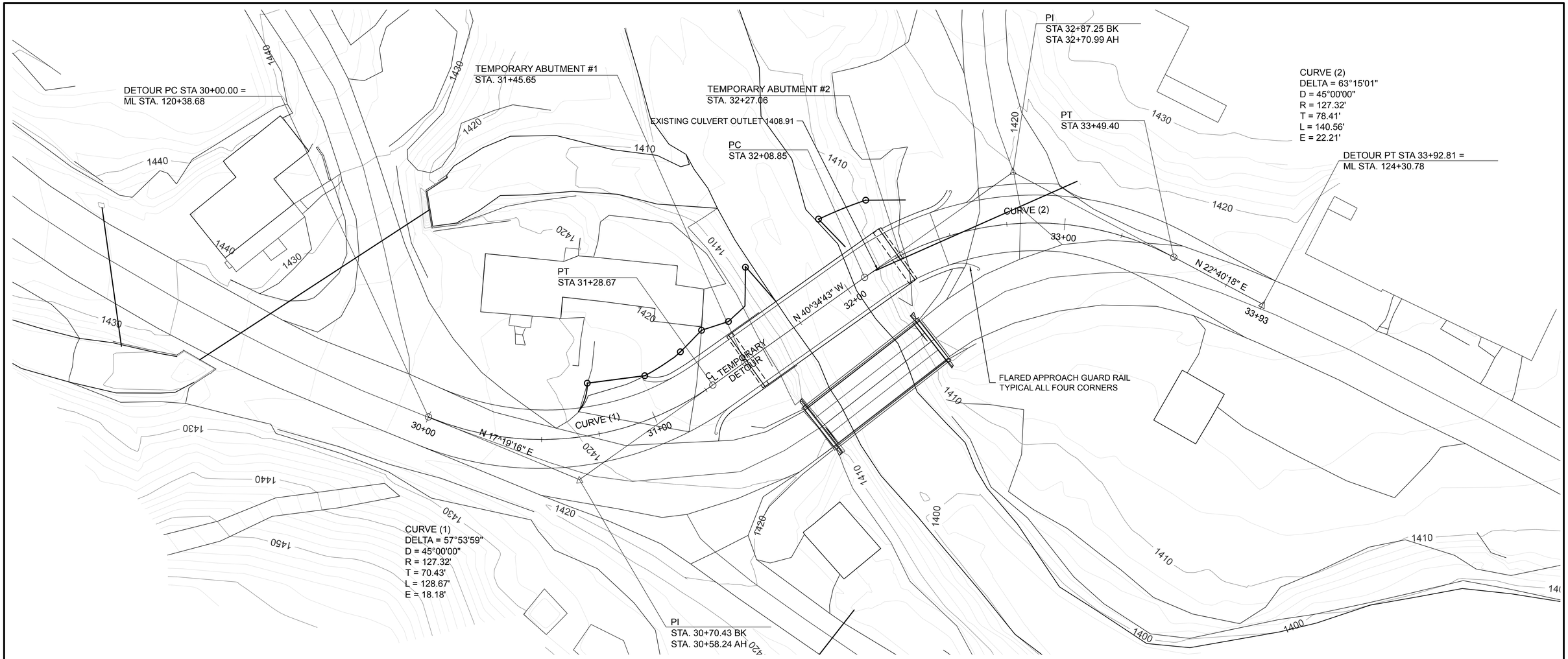

TEMPORARY DETOUR PLAN

SCALE: 1" = 20' - 0"

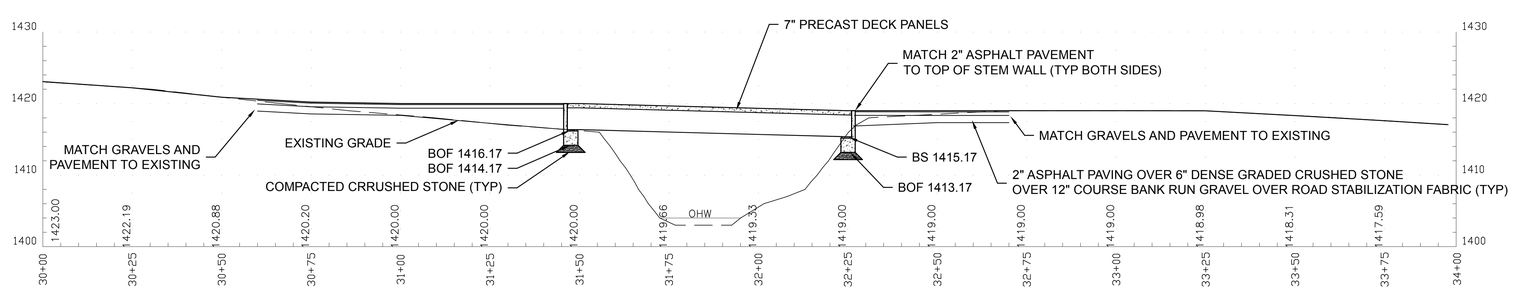

TEMPORARY DETOUR PROFILE

HORIZONTAL SCALE: 1" = 20' - 0"
VERTICAL SCALE: 1" = 10' - 0"

REV. NO.	DATE:

RENAUD BROS. INC.
283 FT. BRIDGEMAN RD. VERNON VT., 05354
PH. (802) 257-7583 FAX: (802) 257-7308

SHEET NAME: TEMPORARY BRIDGE PLAN AND PROFILE

PROJECT NAME: WARDSBORO

PROJECT NO: BRF 013-1 (15)

DRAWN BY: CE | CHK'D BY: | DATE: 09/28/2015

SHEET NO. 6 OF 8

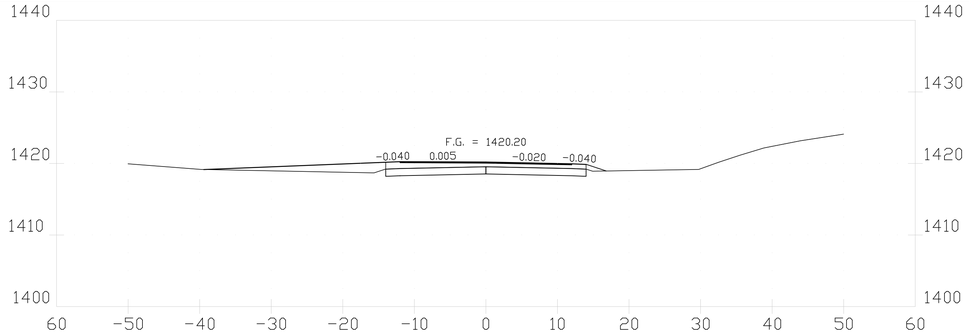

30+75

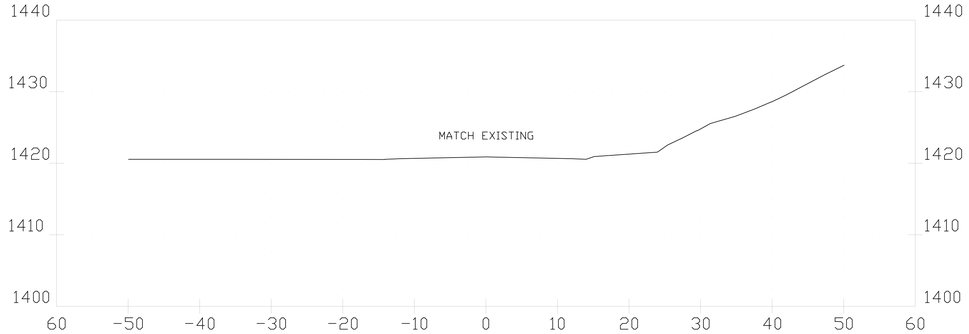

30+50

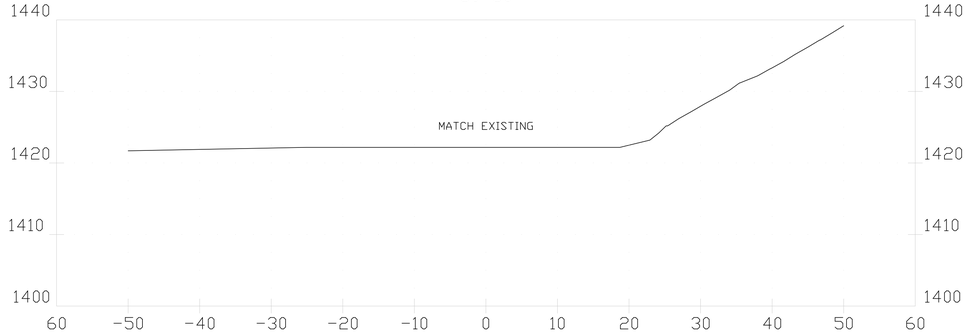

30+25

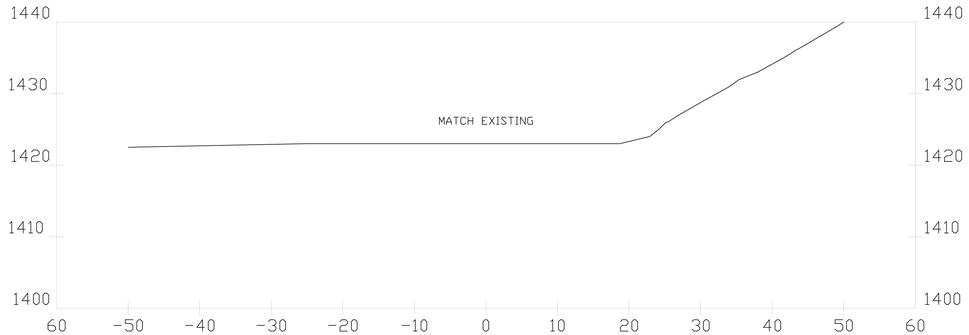

30+00

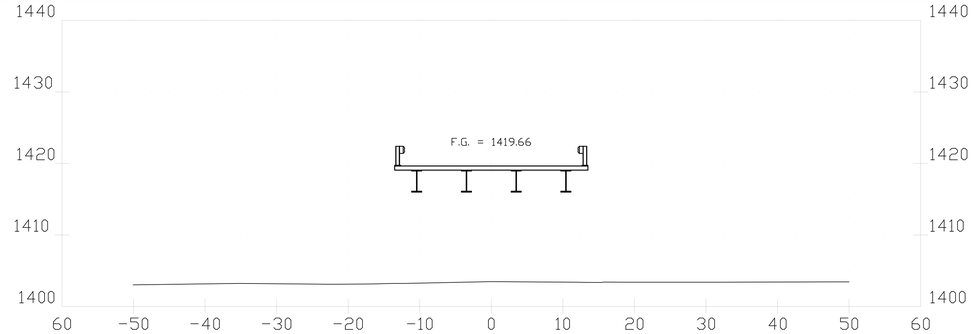

31+75

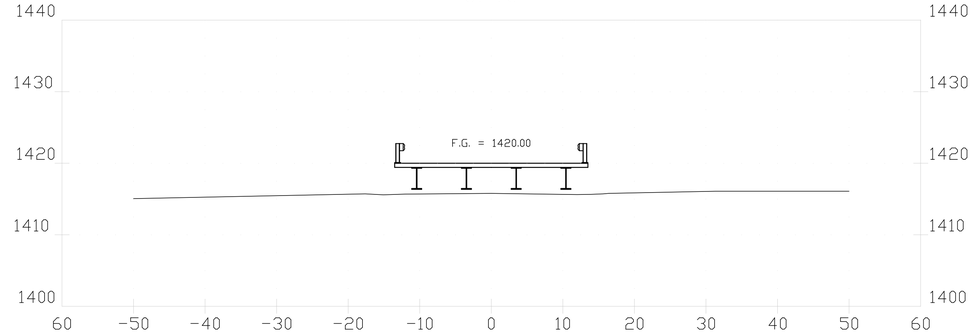

31+50

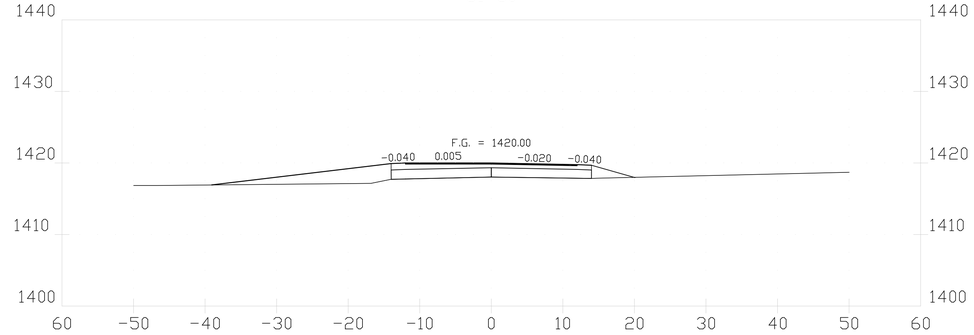

31+25

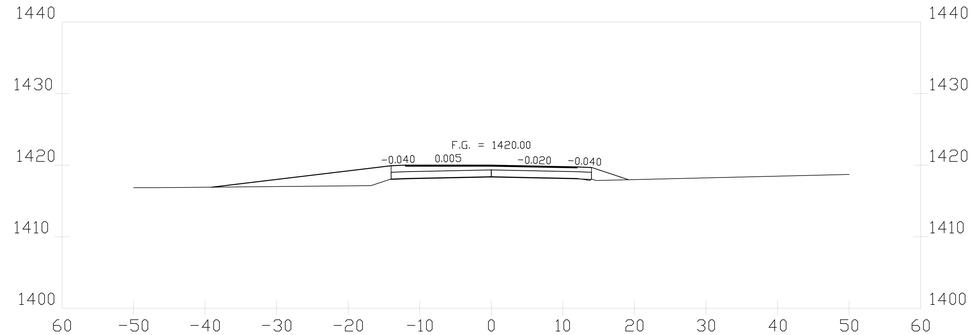

31+00

STATE OF VERMONT
RONALD K. BIELL
No. 6994
REGISTERED
PROFESSIONAL ENGINEER

TEMPORARY DETOUR CROSS SECTIONS

HORIZONTAL SCALE: 1" = 20' - 0"
VERTICAL SCALE: 1" = 20' - 0"

REV. NO.	DATE:

BRENAUD BROS. INC.
285 FT. BRIDGEMAN RD. VERNON VT., 05354
PH. (802) 257-7583 FAX: (802) 257-7308

SHEET NAME: TEMPORARY BRIDGE CROSS SECTIONS

PROJECT NAME: WARDSBORO

PROJECT NO: BRF 013-1 (15)

DRAWN BY: CE | CHK'D BY: | DATE: 09/28/2015

SHEET NO. 7 OF 8

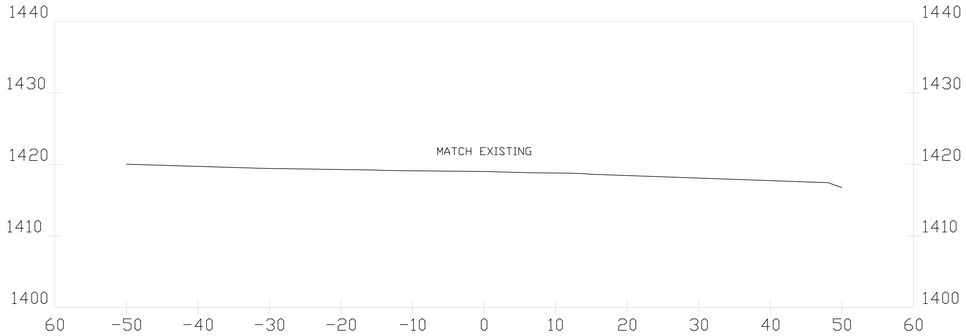

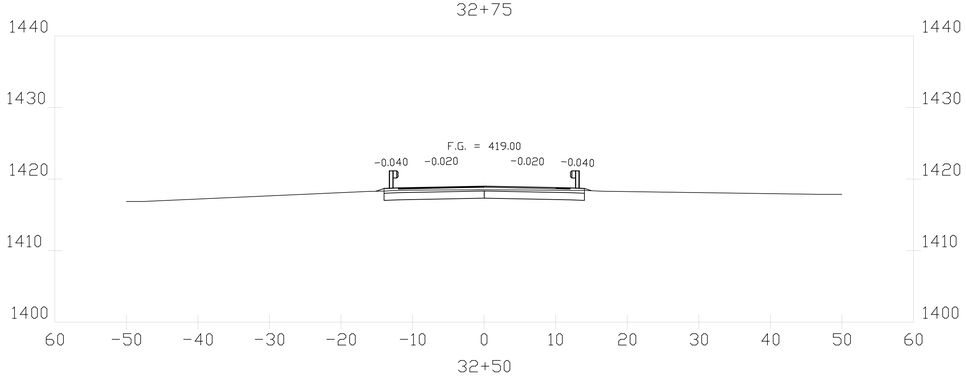

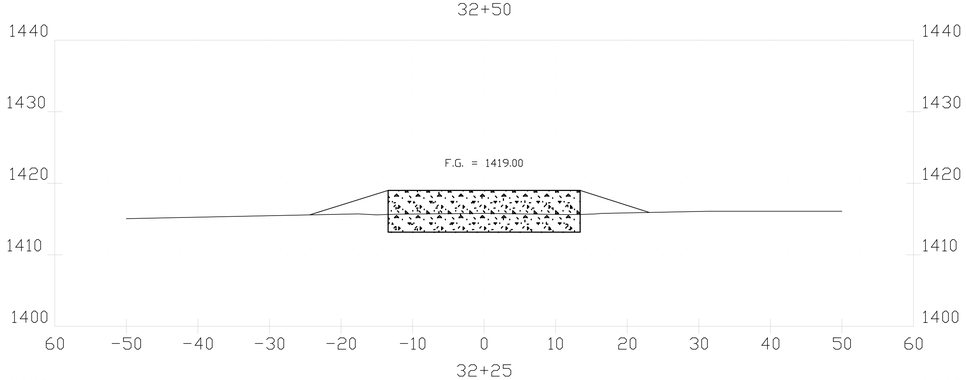

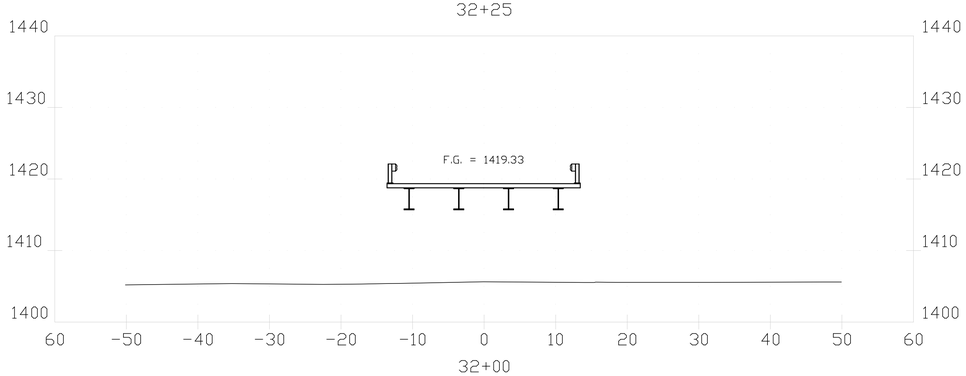

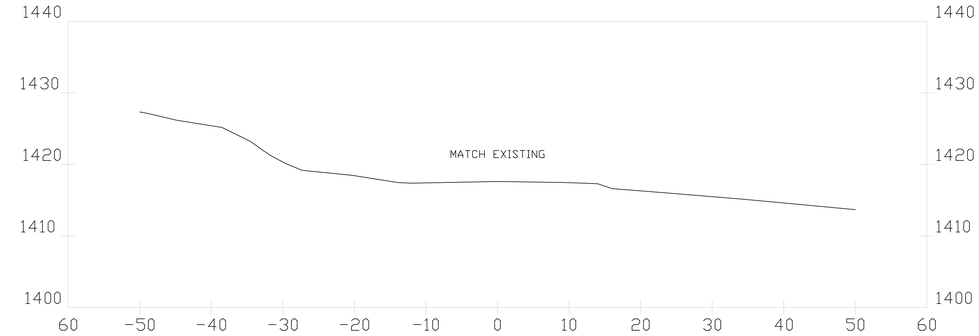

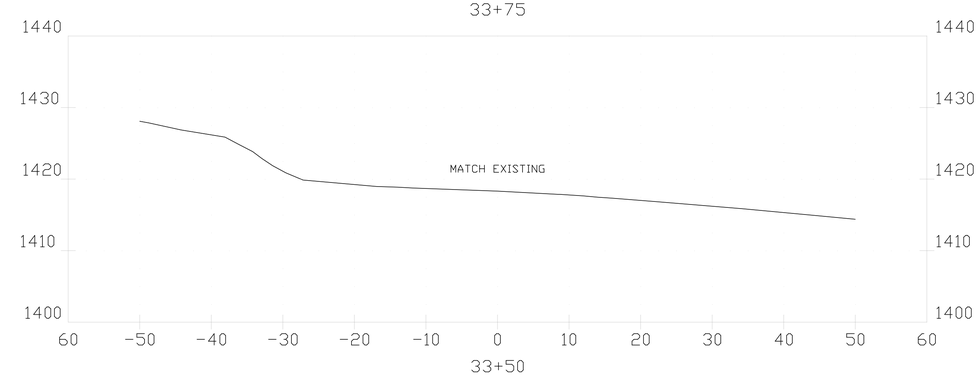

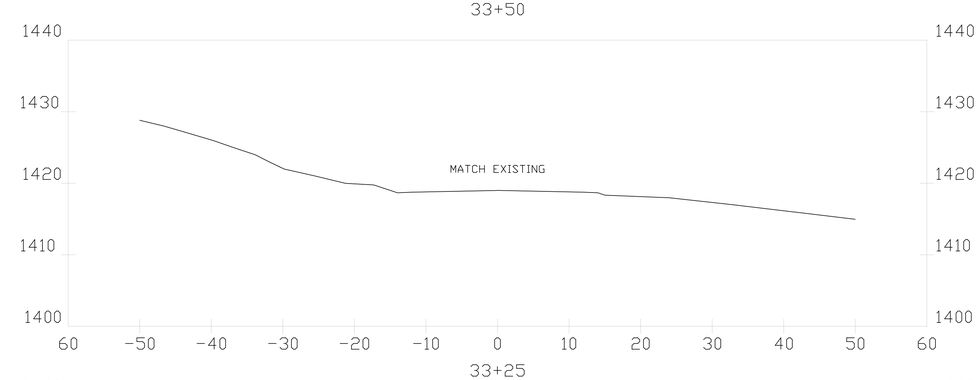

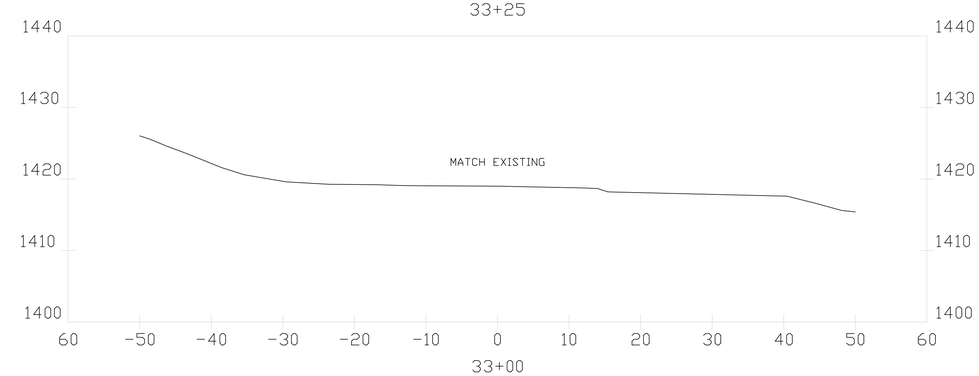

TEMPORARY DETOUR CROSS SECTIONS

HORIZONTAL SCALE: 1" = 20' - 0"
VERTICAL SCALE: 1" = 20' - 0"

REV. NO.	DATE:

RENAUD BROS. INC.
283 FT. BRIDGEMAN RD. VERNON VT., 05354
PH. (802) 257-7583 FAX: (802) 257-7308

SHEET NAME: TEMPORARY BRIDGE CROSS SECTIONS

PROJECT NAME: WARDSBORO

PROJECT NO: BRF 013-1 (15)

DRAWN BY: CE

CHK'D BY:

DATE: 09/28/2015

SHEET NO. 8 OF 8