RENAUD BROS. INC.
STEEL SALES & FABRICATION
VERNON VT. USA
283 FT. BRIDGMAN RD. VERNON VT., 05354
PH. (802)257-7383 FAX (802)257-7308

WELDING PROCEDURE

NO. RB-GW-001

DATE:	4/8/2014	PROJECT NAME:	Wardsboro
BY:	A. DUNKLEE	PROJECT NO.	BRF 013-1 (15)
AWS CODE:		PQR REF. NO:	N/A

MATERIAL SPECIFICATION:	ASTM 709 GR. 36-50		
WELDING PROCESS:	SMAW		
MANUAL, SEMI-AUTOMATIC OR AUTOMATIC:	MANUAL		
WELDING POSITION:	1G		
FILLER METAL SPECIFICATION:	ANSI/AWS A5.1-A5.5		
FILLER METAL CLASSIFICATION:	E7018		
FLUX:	N/A		
SHIELDING GAS:	N/A	FLOW RATE:	N/A
SINGLE OR MULTIPLE PASS:	MULTIPLE		
SINGLE OR MULTIPLE ARC:	SINGLE		
WELDING CURRENT:	DC		
WELDING POLARITY:	ELECTRODE POSITIVE		
WELDING PROGRESSION:	N/A		
ROOT TREATMENT:	REMOVE ALL IMPURITIES & GALV.		
PREHEAT & INTERPASS TEMPERATURE:	$\geq 1\frac{1}{2}$"=70°F $1\frac{1}{2}$"-$2\frac{1}{2}$"=150°F OVER $2\frac{1}{2}$"=225°F		
POSTHEAT TREATMENT:	N/A		
HEAT INPUT:	MIN: N/A	MAX:	N/A
ELECTRODE STICKOUT:	N/A		

APPROVAL STAMP

PASS NO.	ELECTRODE SIZE:	WELDING CURRENT AMPS	WELDING CURRENT VOLTS	TRAVEL SPEED
AS REQ.	3/32"	70-110		ADJUST AS REQ.
	1/8"	70-170		

NOTES:

MIN. WELD SIZE- 5/16"
GRIND ALL BURRS, ENSURE FLUSH POINT FIT.
PILE GRADE: A572-50

JOINT DETAIL: HP12X74 PILE POINT

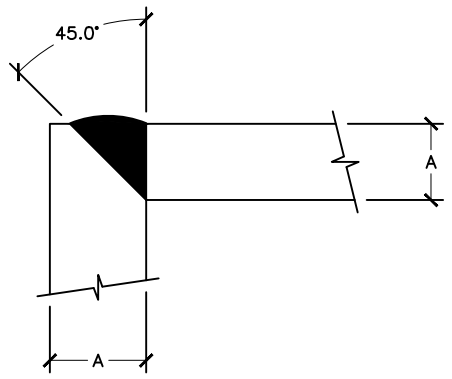

A- VARIES (ADJUST PREHEAT TEMP AS REQ.)

C:\Users\ADunklee\Documents\WorkDocuments\WELDING PROCEDURES\RB-FW-001.dwg, 4/8/2014 10:57:14 AM

R.B. RENAUD BROS. INC.
STEEL SALES & FABRICATION
VERNON VT. USA

283 FT. BRIDGMAN RD. VERNON VT., 05354
PH. (802)257-7383 FAX (802)257-7308

WELDING PROCEDURE

NO. RB-FW-001

DATE:	4/8/2014	PROJECT NAME:	Wardsboro
BY:	A. DUNKLEE	PROJECT NO.	BRF 013-1 (15)
AWS CODE:		PQR REF. NO:	N/A

MATERIAL SPECIFICATION:	ASTM 572 GR. 50		
WELDING PROCESS:	SMAW		
MANUAL, SEMI-AUTOMATIC OR AUTOMATIC:	MANUAL		
WELDING POSITION:	ALL		
FILLER METAL SPECIFICATION:	ANSI/AWS A5.1-A5.5		
FILLER METAL CLASSIFICATION:	E7018		
FLUX:	N/A		
SHIELDING GAS:	N/A	FLOW RATE:	N/A
SINGLE OR MULTIPLE PASS:	MULTIPLE		
SINGLE OR MULTIPLE ARC:	SINGLE		
WELDING CURRENT:	DC		
WELDING POLARITY:	ELECTRODE POSITIVE		
WELDING PROGRESSION:	N/A		
ROOT TREATMENT:	REMOVE ALL IMPURITIES & GALV.		
PREHEAT & INTERPASS TEMPERATURE:	$\geq 1\frac{1}{2}$"=70°F $1\frac{1}{2}$"-$2\frac{1}{2}$"=150°F OVER $2\frac{1}{2}$"=225°F		
POSTHEAT TREATMENT:	N/A		
HEAT INPUT:	MIN: N/A	MAX:	N/A
ELECTRODE STICKOUT:	N/A		

APPROVAL STAMP

PASS NO.	ELECTRODE SIZE:	WELDING CURRENT AMPS	WELDING CURRENT VOLTS	TRAVEL SPEED
AS REQ.	3/32"	70-110		ADJUST AS REQ.
	1/8"	70-170		

NOTES:
- ALL MATERIAL TO BE A572 GR. 50
- PILE CAP SIZE: 1"X14"X14"
- GRIND SURFACES FLAT AND SMOOTH PRIOR TO WELDING

JOINT DETAIL: HP 12X74 PILE CAP

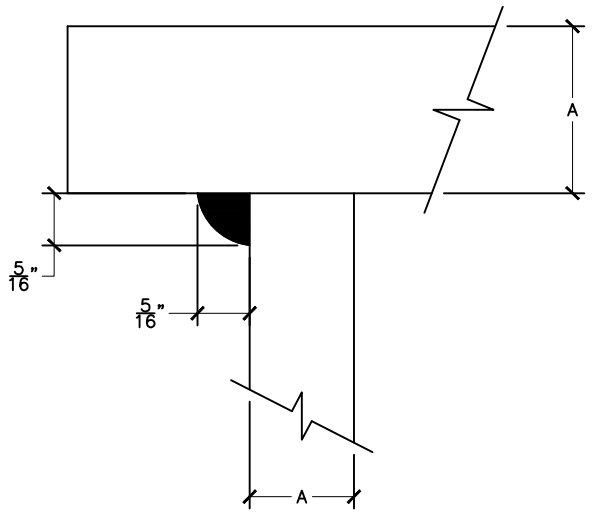

A- VARIES (ADJUST PREHEAT TEMP AS REQ.)

C:\Users\ADunklee\Documents\WorkDocuments\WELDING PROCEDURES\RB-FW-001.dwg, 4/8/2014 10:57:14 AM

R.B.I. RENAUD BROS. INC. STEEL SALES & FABRICATION VERNON VT. USA	WELDING PROCEDURE	NO. SPLICE DETAIL	SHEET: 3 OF 4
	DATE: 4/8/2014	PROJECT NAME: Wardsboro	
	BY: A. DUNKLEE	PROJECT NO. BRF 013-1 (15)	
283 FT. BRIDGMAN RD. VERNON VT., 05354 PH. (802)257-7383 FAX (802)257-7308	AWS CODE:	PQR REF. NO: N/A	

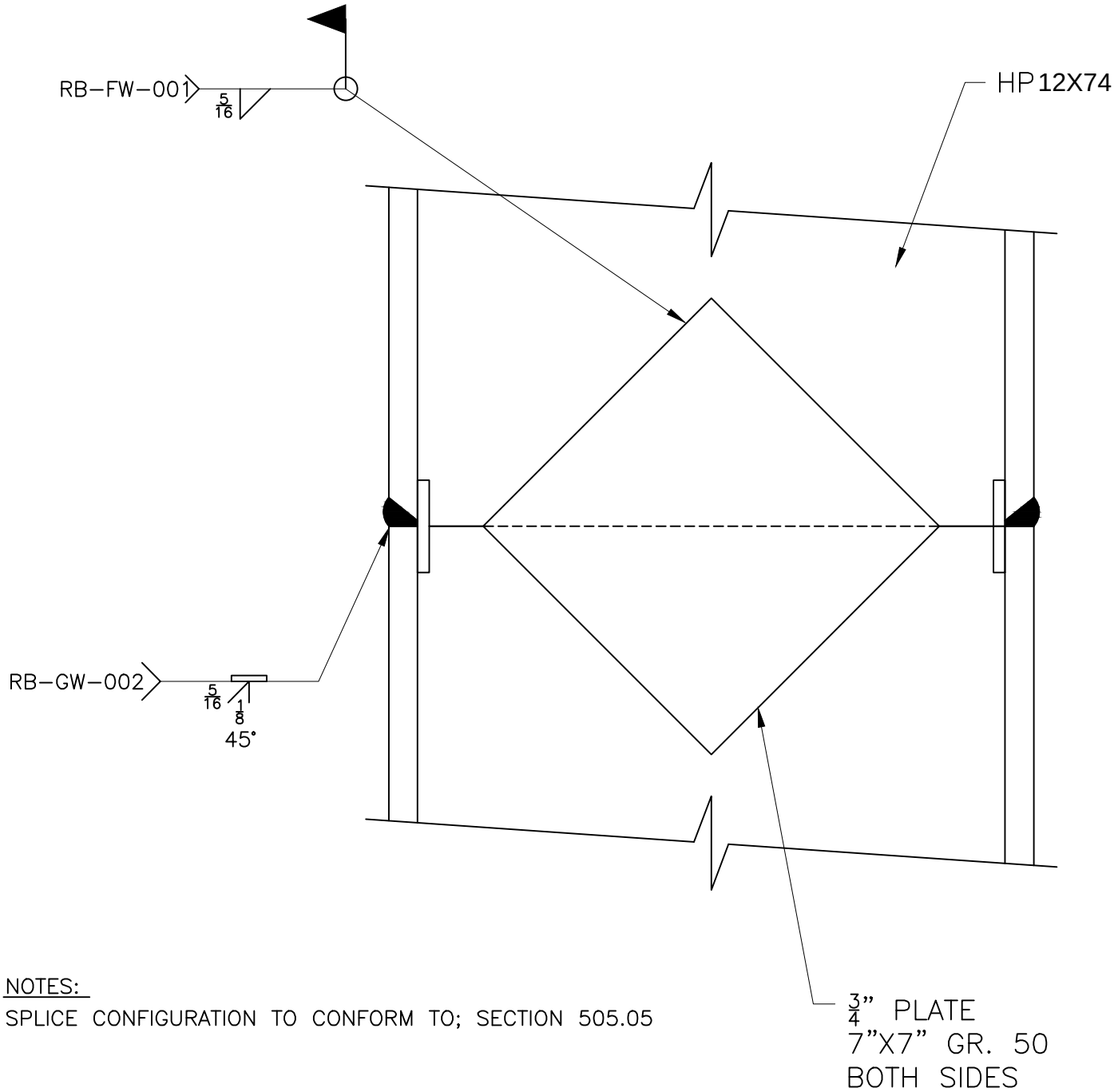

NOTES:

SPLICE CONFIGURATION TO CONFORM TO; SECTION 505.05

C:\Users\ADunklee\Documents\WorkDocuments\WELDING PROCEDURES\RB-FW-001.dwg, 4/8/2014 10:57:15 AM

R.B. RENAUD BROS. INC.
STEEL SALES & FABRICATION
VERNON VT. USA
283 FT. BRIDGMAN RD. VERNON VT., 05354
PH. (802)257-7383 FAX (802)257-7308

WELDING PROCEDURE

NO. RB-GW-002

DATE:	4/8/2014	PROJECT NAME:	Wardsboro
BY:	A. DUNKLEE	PROJECT NO.	BRF 013-1 (15)
AWS CODE:		PQR REF. NO:	N/A

MATERIAL SPECIFICATION:	ASTM 572 GR. 50		
WELDING PROCESS:	SMAW		
MANUAL, SEMI-AUTOMATIC OR AUTOMATIC:	MANUAL		
WELDING POSITION:	2G		
FILLER METAL SPECIFICATION:	ANSI/AWS A5.1-A5.5		
FILLER METAL CLASSIFICATION:	E7018		
FLUX:	N/A		
SHIELDING GAS:	N/A	FLOW RATE:	N/A
SINGLE OR MULTIPLE PASS:	MULTIPLE		
SINGLE OR MULTIPLE ARC:	SINGLE		
WELDING CURRENT:	DC		
WELDING POLARITY:	ELECTRODE POSITIVE		
WELDING PROGRESSION:	N/A		
ROOT TREATMENT:	REMOVE ALL IMPURITIES & GALV.		
PREHEAT & INTERPASS TEMPERATURE:	$\geq 1\frac{1}{2}$"=70°F $1\frac{1}{2}$"-$2\frac{1}{2}$"=150°F OVER $2\frac{1}{2}$"=225°F		
POSTHEAT TREATMENT:	N/A		
HEAT INPUT:	MIN: N/A	MAX:	N/A
ELECTRODE STICKOUT:	N/A		

APPROVAL STAMP

PASS NO.	ELECTRODE SIZE:	WELDING CURRENT AMPS	WELDING CURRENT VOLTS	TRAVEL SPEED
AS REQ.	3/32"	70-110		ADJUST AS REQ.
	1/8"	70-170		

NOTES:
ALL MATERIAL TO BE A572 GR. 50
ROOT OPENING- 1/8" MIN.
1/4"X2" BACKING STRIP

JOINT DETAIL: HP 12X74 PILE SPLICE

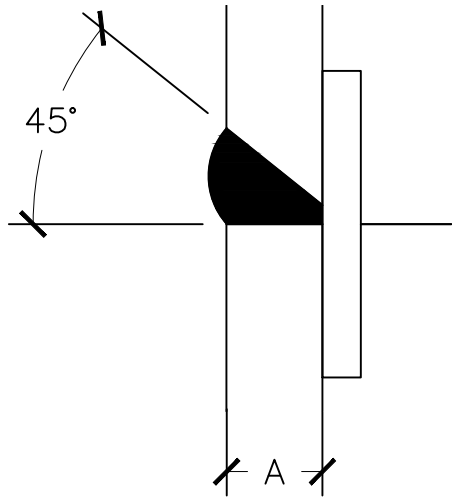

A- VARIES (ADJUST PREHEAT TEMP AS REQ.)

C:\Users\ADunklee\Documents\WorkDocuments\WELDING PROCEDURES\RB-FW-001.dwg, 4/8/2014 10:57:15 AM