RENAUD BROS., INC.

283 Fort Bridgman Road #2, Vernon, VT 05354 **phone (802) 257-7383**
fax (802) 257-7308

Wardsboro BRF 013-1 (15)
RIGGING PLAN

Table of Contents **Page#**

Cover & Table of Contents	1
Lift Checklists and Crane Charts	2-7
Rigging Equipment Cut Sheets	8-9
Rigging Plan Sheet	10
Rigging Plan Section	11

VALLEY CRANE SERVICES INC.

Lift Checklist

PROJECT: VT Route 100 over Wardsboro Brook Bridge #68

Description of Lift:

Set 1G1 with AC-120, chain and brace to temporary bridge abutment on both ends. Set 2G2 in place and leave AC-120 crane attached. Install 5D1 diaphragms between 1G1 and 2G2 with T775 crane. Repeat with 3G3 and 4G4 and the rest of the diaphragms.

Crane Data

Lattice Boom or Mobile Hydraulic: Mobile Hydraulic Crane Truck

Crane Make/Model/Size: Demag AC120 165Ton

Counterweight: 12,300

Maximum Load Radius: 65'

Boom Length: 135'

Line Pull: 16,000

Load Chart Capacity @ max radii: 15,600

Load Data

Gross Load Weight: 9,859 lbs

+Rigging Weight: 231 lbs

+Main Block: 1212.542 lbs

+Effective Jib Weight: N/A lbs

+Cable Weight: N/A lbs

+Overhaul Ball Weight: N/A lbs

=Total Weight of Load: 11,303 lbs

**Total weight = 73 % of Crane's 85% Crane Capacity

BY: Milton Severence Date: July 6, 2016

VALLEY CRANE SERVICES INC.

Lift Checklist

Load Description	**Load Weight lbs**	**Load Radius**
1G1 69’-5/16”	9,505	58’
2G2 69’-5/16”	9,631	58’
3G3 69’-5/16”	9,631	58’
4G4 69’-5/16”	9,505	58’
RIGGING WEIGHT **Description**	**Weight**	**Capacity**
2 - TPXC-2000	21 lbs	20,000 EA
2 - Clamp-Co Beam Clamps Model F15	200lbs	15 Ton
2 - 8 ½ Ton Shackles	10 lbs	8.5 Ton

NOTES: _____

_____

Lifting capacities main boom in 1,000 lb

Special boom extension sequence

12,300 lb **25'1" x 24'7"** **360°** **85 %**

	Length of main boom (ft)					
Radius	88.6 ft	104.3 ft	119.1 ft	135.2 ft	150.6 ft	166.0 ft
ft	1,000 lb					
15	55.7	–	–	–	–	–
16	55.7	56.3	–	–	–	–
19	52.8	51.9	38.8	–	–	–
23	48.9	46.4	38.7	–	–	–
26	46.2	43.0	36.3	21.8	–	–
29	43.6	39.8	34.1	21.8	21.8	–
33	40.6	36.2	31.4	21.8	21.8	21.8
39	36.6	31.8	28.1	21.8	21.8	21.8
46	29.2	27.9	25.1	21.5	21.8	21.5
52	23.0	23.7	22.8	19.5	20.3	19.9
59	17.6	18.5	18.9	17.8	17.8	16.7
65	14.2	14.9	15.3	15.6	14.4	13.3
72	10.8	11.7	12.2	12.4	11.3	10.2
79	–	9.1	9.6	9.8	8.7	7.6
85	–	7.3	7.8	8.0	6.9	5.8
92	–	5.4	6.1	6.3	5.0	4.1
98	–	–	4.9	5.1	3.6	2.9
105	–	–	3.5	3.9	2.6	–
111	–	–	–	2.9	–	–

Boom extension sequence %						
Tele 1	0	0	0	0	0	0
Tele 2	0	0	0	0	50	100
Tele 3	50	67	83	100	100	100
Tele 4	50	67	83	100	100	100
Tele 5	50	67	83	100	100	100

VALLEY CRANE SERVICES INC.

Lift Checklist

PROJECT: VT Route 100 over Wardsboro Brook Bridge #68

Description of Lift:

Set 1G1 with AC-120, chain and brace to temporary bridge abutment on both ends. Set 2G2 in place and leave AC-120 crane attached. Install 5D1 diaphragms between 1G1 and 2G2 with T775 crane. Repeat with 3G3 and 4G4 and the rest of the diaphragms.

Crane Data

Lattice Boom or Mobile Hydraulic: Mobile Hydraulic Crane Truck

Crane Make/Model/Size: Terex T775

Counterweight: 15,000

Maximum Load Radius: 125'

Boom Length: 126'

Line Pull: _____

Load Chart Capacity @ max radii: 3,300

Load Data

Gross Load Weight: 369 lbs

+Rigging Weight: 8 lbs

+Main Block: 1,200 lbs

+Effective Jib Weight: N/A lbs

+Cable Weight: N/A lbs

+Overhaul Ball Weight: N/A lbs

=Total Weight of Load: 1,577 lbs

**Total weight = 48 % of Crane's 85% Crane Capacity

BY: _____ Date: _____

VALLEY CRANE SERVICES INC.

Lift Checklist

Load Description	**Load Weight lbs**	**Load Radius**
5D1 8’-4 ½”	369	82’
RIGGING WEIGHT **Description**	**Weight**	**Capacity**
1 - TPXC-1000	8 lbs	8, 000lbs

NOTES: _____

_____

75 TON TEREX Charts

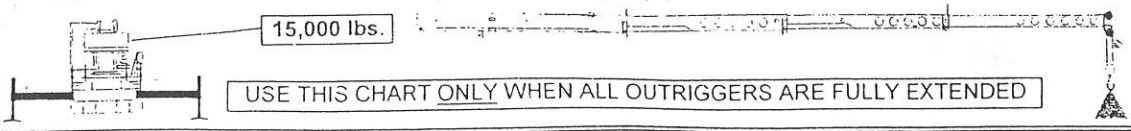

USE THIS CHART ONLY WHEN ALL OUTRIGGERS ARE FULLY EXTENDED

RATED LOAD ON OUTRIGGERS

BOOM LENGTH 40 FT

LOAD RADIUS (FT)	BOOM ANGLE (DEG) REF	OVER REAR (LB)	360° (LB)
10	69.4	150000 *	150000 *
12	66.2	125600 *	125600 *
15	61.2	108900 *	108900 *
20	52.3	84500 *	83800 *
25	41.9	65500 *	65500 *
30	28.4	52200	52200 *
33.9	0.0	28500 *	28500 *

BOOM LENGTH 54 FT

LOAD RADIUS (FT)	BOOM ANGLE (DEG) REF.	OVER REAR (LB)	360° (LB)
10	74.9	102500 *	102500 *
12	72.7	102500 *	102500 *
15	69.3	100500 *	100500 *
20	63.4	85300 *	84800 *
25	57.1	66500 *	66500 *
30	50.2	53600	53600 *
35	43.1	40900	40900 *
40	33.5	32500	32500
45	20.9	26400	26400
47.9	0.0	19000 *	19000 *

BOOM LENGTH 66 FT

LOAD RADIUS (FT)	BOOM ANGLE (DEG) REF.	OVER REAR (LB)	360° (LB)
15	73.2	80600 *	80600 *
20	68.5	71900 *	71900 *
25	63.7	64800 *	64800 *
30	58.7	54000	54000 *
35	53.3	41500	41500 *
40	47.5	33100	33100
45	41.0	27100	27100
50	33.5	22500	22500
55	23.9	19000	19000
59.9	0.0	14100 *	14100 *

BOOM LENGTH 78 FT

LOAD RADIUS (FT)	BOOM ANGLE (DEG) REF	OVER REAR (LB)	360° (LB)
20	72.0	62200 *	62200 *
25	68.1	55700 *	55700 *
30	64.0	49700 *	49700 *
35	59.7	41700	41700 *
40	55.3	33400	33400
45	50.6	27400	27400
50	45.5	22900	22900
55	39.9	19400	19400
60	33.5	16600	16600
65	25.7	14200	14200
70	14.0	12300	12300
71.9	0.0	10700 *	10700 *

BOOM LENGTH 90 FT

LOAD RADIUS (FT)	BOOM ANGLE (DEG) REF.	OVER REAR (LB)	360° (LB)
20	74.5	56200 *	56200 *
25	71.2	48000 *	48000 *
30	67.7	41700 *	41700 *
35	64.2	36600 *	36600 *
40	60.5	32900 *	32900 *
45	56.7	27600	27600
50	52.8	23100	23100
55	48.5	19700	19700
60	44.0	16800	16800
65	39.1	14500	14500
70	33.5	12600	12600
75	26.9	11000	11000
80	18.1	9500	9500
83.9	0.0	8200 *	8200 *

BOOM LENGTH 102 FT

LOAD RADIUS (FT)	BOOM ANGLE (DEG) REF.	OVER REAR (LB)	360° (LB)
25	73.5	41900 *	41900 *
30	70.5	36400 *	36400 *
35	67.4	32100 *	32100 *
40	64.3	28600 *	28600 *
45	61.1	25700 *	25700 *
50	57.8	23300	23300 *
55	54.4	19800	19800
60	50.8	17000	17000
65	47.0	14700	14700
70	42.9	12800	12800
75	38.5	11100	11100
80	33.5	9800	9800
85	27.8	8500	8500
90	20.6	7500	7500
95	8.6	6500	6500
95.9	0.0	6300 *	6300

BOOM LENGTH 114 FT

LOAD RADIUS (FT)	BOOM ANGLE (DEG) REF	OVER REAR (LB)	360° (LB)
30	72.6	31500 *	31500 *
35	70.0	29500 *	29500 *
40	67.2	26200 *	26200 *
45	64.4	23500 *	23500 *
50	61.5	21400 *	21400 *
55	58.6	19500 *	19500 *
60	55.6	17100	17100
65	52.5	14800	14800
70	49.1	12900	12900
75	45.7	11300	11300
80	42.0	9900	9900
85	38.0	8700	8700
90	33.5	7700	7700
95	28.5	6700	6700
100	22.4	5800	5800
105	13.9	5100	5000
107.9	0.0	4700	4600

BOOM LENGTH 126 FT

LOAD RADIUS (FT)	BOOM ANGLE (DEG) REF.	OVER REAR (LB)	360° (LB)
35	71.9	24700 *	24700 *
40	69.5	24600 *	24600 *
45	67.0	22100 *	22100 *
50	64.5	20000 *	20000 *
55	62.0	18200 *	18200 *
60	59.3	16600 *	16600 *
65	56.6	14900	14900
70	53.8	13000	13000
75	50.9	11400	11400
80	47.8	10000	10000
85	44.6	8800	8800
90	41.2	7700	7700
95	37.5	6800	6800
100	33.5	6000	6000
105	29.0	5200	5200
110	23.7	4600	4500
115	16.9	3900	3900
119.9	0	3400	3300

Add 100 lbs to the chart values if the AUXILLIARY BOOM HEAD SHEAVE is NOT ERECTED

Crosby® Screw Pin Shackles

G-209/S-209

G-209 Screw pin anchor shackles meet the performance requirements of Federal Specification RR-C-271F Type IVA, Grade A, Class 2, except for those provisions required of the contractor. For additional information, see page 452.

- Capacities 1/3 thru 55 metric tons, grade 6.
- Forged - Quenched and Tempered, with alloy pins.
- Working Load Limit and grade "6" permanently shown on every shackle.
- Hot Dip galvanized or self colored.
- Fatigue rated.
- Shackles 25t and larger are RFID EQUIPPED.
- Shackles can be furnished proof tested with certificates to designated standards, such as ABS, DNV, Lloyds, or other certification. Proof testing and certification available when requested at the time of order, charges will apply.
- Approved for use at -40 degrees C (-40 degrees F) to 204 degrees C (400 degrees F).
- 3.25t through 25t G209 anchor shackles are type approved to DNV Certification Notes 2.7-1- Offshore Containers. These shackles are statistical proof and impact tested to 42 joules (31 ft-lbs.) min. avg. at -20 degrees C (-4 degrees F). The tests are conducted by Crosby and 3.1 test certification is available upon request.
- All other 209 and all 210 shackles can meet charpy requirements of 42 joules(31 ft-lbs) avg. at -20 degrees C (-4 degrees F) upon special request.
- Meets or exceeds all requirements of ASME B30.26.
- Type Approval and certification in accordance with ABS 2006 Steel Vessel Rules 1-1-17.7, and ABS Guide for Certification of Cranes.
- Crosby 3.25t through 25t G209 anchor shackles are type approved to DNV Certification Notes 2.7-1 - Offshore Containers. These Crosby shackles are statistical proof and impact tested. The tests are conducted by Crosby and 3.1 test certification is available upon request.
- Look for the Red Pin®. . . the mark of genuine Crosby quality.

G-210/S-210

G-210 Screw pin anchor shackles meet the performance requirements of Federal Specification RR-C-271F Type IVB, Grade A, Class 2, except for those provisions required of the contractor. For additional information, see page 452.

Load Rated Fatigue Rated TA QUIC-CHECK QT MAXTOUGH CE

SEE APPLICATION INFORMATION
On Page 92 of the General Catalog
Para Español: www.thecrosbygroup.com

G-209 / S-209 Screw Pin Anchor Shackles

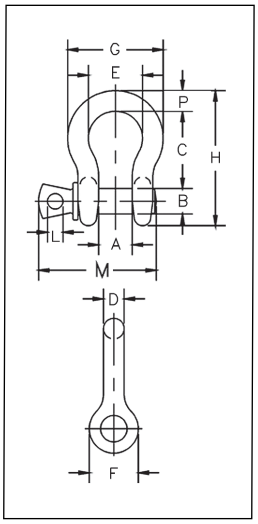

Nominal Size (in.)	Working Load Limit (t)*	Stock No. G-209	Stock No. S-209	Weight Each (lbs.)	Dimensions (in.) A	B	C	D	E	F	G	H	L	M	P	Tolerance + / - C	A
3/16	1/3	1018357	–	.06	.38	.25	.88	.19	.60	.56	.98	1.47	.16	1.14	.19	.06	.06
1/4	1/2	1018375	1018384	.10	.47	.31	1.13	.25	.78	.61	1.28	1.84	.19	1.43	.25	.06	.06
5/16	3/4	1018393	1018400	.18	.53	.38	1.22	.31	.84	.75	1.47	2.09	.22	1.71	.31	.06	.06
3/8	1	1018419	1018428	.31	.66	.44	1.44	.38	1.03	.91	1.78	2.49	.25	2.02	.38	.13	.06
7/16	1-1/2	1018437	1018446	.38	.75	.50	1.69	.44	1.16	1.06	2.03	2.91	.31	2.37	.44	.13	.06
1/2	2	1018455	1018464	.72	.81	.63	1.88	.50	1.31	1.19	2.31	3.28	.38	2.69	.50	.13	.06
5/8	3-1/4	1018473	1018482	1.37	1.06	.75	2.38	.63	1.69	1.50	2.94	4.19	.44	3.34	.69	.13	.06
3/4	4-3/4	1018491	1018507	2.35	1.25	.88	2.81	.75	2.00	1.81	3.50	4.97	.50	3.97	.81	.25	.06
7/8	6-1/2	1018516	1018525	3.62	1.44	1.00	3.31	.88	2.28	2.09	4.03	5.83	.50	4.50	.97	.25	.06
1	8-1/2	1018534	1018543	5.03	1.69	1.13	3.75	1.00	2.69	2.38	4.69	6.56	.56	5.13	1.06	.25	.06
1-1/8	9-1/2	1018552	1018561	7.41	1.81	1.25	4.25	1.16	2.91	2.69	5.16	7.47	.63	5.71	1.25	.25	.06
1-1/4	12	1018570	1018589	9.50	2.03	1.38	4.69	1.29	3.25	3.00	5.75	8.25	.69	6.25	1.38	.25	.06
1-3/8	13-1/2	1018598	1018605	13.53	2.25	1.50	5.25	1.42	3.63	3.31	6.38	9.16	.75	6.83	1.50	.25	.13
1-1/2	17	1018614	1018623	17.20	2.38	1.63	5.75	1.54	3.88	3.63	6.88	10.00	.81	7.33	1.62	.25	.13
1-3/4	25	1018632	1018641	27.78	2.88	2.00	7.00	1.84	5.00	4.19	8.86	12.34	1.00	9.06	2.25	.25	.13
2	35	1018650	1018669	45.00	3.25	2.25	7.75	2.08	5.75	4.81	9.97	13.68	1.22	10.35	2.40	.25	.13
2-1/2	55	1018678	1018687	85.75	4.13	2.75	10.50	2.71	7.25	5.69	12.87	17.84	1.38	13.00	3.13	.25	.25

G-210 / S-210 Screw Pin Chain Shackles

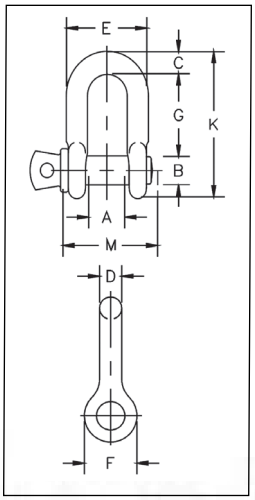

Nominal Size (in.)	Working Load Limit (t)*	Stock No. G-210	Stock No. S-210	Weight Each (lbs.)	Dimensions (in.) A	B	C	D	E	F	G	K	L	M	Tolerance + / - G	A
1/4	1/2	1019150	1019169	.11	.47	.31	.25	.25	.97	.62	.97	1.59	.19	1.43	.06	.06
5/16	3/4	1019178	1019187	.17	.53	.38	.31	.31	1.15	.75	1.07	1.91	.22	1.71	.06	.06
3/8	1	1019196	1019203	.28	.66	.44	.38	.38	1.42	.92	1.28	2.31	.25	2.02	.13	.06
7/16	1-1/2	1019212	1019221	.43	.75	.50	.44	.44	1.63	1.06	1.48	2.67	.31	2.37	.13	.06
1/2	2	1019230	1019249	.59	.81	.63	.50	.50	1.81	1.18	1.66	3.03	.38	2.69	.13	.06
5/8	3-1/4	1019258	1019267	1.25	1.06	.75	.63	.63	2.32	1.50	2.04	3.76	.44	3.34	.13	.06
3/4	4-3/4	1019276	1019285	2.63	1.25	.88	.81	.75	2.75	1.81	2.40	4.53	.50	3.97	.25	.06
7/8	6-1/2	1019294	1019301	3.16	1.44	1.00	.97	.88	3.20	2.10	2.86	5.33	.50	4.50	.25	.06
1	8-1/2	1019310	1019329	4.75	1.69	1.13	1.00	1.00	3.69	2.38	3.24	5.94	.56	5.13	.25	.06
1-1/8	9-1/2	1019338	1019347	6.75	1.81	1.25	1.25	1.13	4.07	2.69	3.61	6.78	.63	5.71	.25	.06
1-1/4	12	1019356	1019365	9.06	2.03	1.38	1.38	1.25	4.53	3.00	3.97	7.50	.69	6.25	.25	.13
1-3/8	13-1/2	1019374	1019383	11.63	2.25	1.50	1.50	1.38	5.01	3.31	4.43	8.28	.75	6.53	.25	.13
1-1/2	17	1019392	1019409	15.95	2.38	1.63	1.62	1.50	5.38	3.62	4.87	9.05	.81	7.33	.25	.13
1-3/4	25	1019418	1019427	26.75	2.88	2.00	2.12	1.75	6.38	4.19	5.78	10.97	1.00	9.06	.25	.13
2	35	1019436	1019445	42.31	3.25	2.25	2.36	2.10	7.25	5.00	6.77	12.74	1.13	10.35	.25	.13
2-1/2	55	1019454	1019463	71.75	4.12	2.75	2.63	2.63	9.38	5.68	8.07	14.85	1.38	13.00	.25	.25

* **NOTE:** Maximum Proof Load is 2.0 times the Working Load Limit. Minimum Ultimate Strength is 6 times the Working Load Limit. For Working Load Limit reduction due to side loading applications, see page 94.

Copyright © 2016 The Crosby Group LLC All Rights Reserved

Twin-Path® Extra Check-Fast® Sling

US Patent #7,926,859, #7,661,737, #7,568,333 CA #2,547,632
EP #1,899,255 Japan #4,864,965 China #ZL200680017605.5

TPXCF These slings have overload indicators, Covermax® covers for superior abrasion resistance and inner red covers. They are used worldwide in place of steel rigging for heavy lifts. They are approximately 10% of the weight of a steel sling and products are repairable. The Twin-Path® patented design provides the rigger with two independent connections between the hook and the load for protection assurance. These slings have less than 1% elongation at rated capacity. If ergonomics, productivity and safety are important, then these slings are your best choice. Independent testing shows that K-Spec® is the longest lasting load bearing core yarn in any sling.

NOTE: Capacities shown include both paths and are for one complete sling. Sling ratings based on commercial fittings of equal or greater capacity. Conforms to ANSI/ASME B30.9 chapter 6, NAVFAC P-307 section 14.7.4.3, and the Cordage Institute Roundsling Standard. This chart is based on a 5:1 Design Factor (DF); but any other DF can be fabricated. Higher capacity slings are available. **CAPACITIES ARE IN POUNDS (LBS.).**

Twin-Path® Sling Stock No.	Vertical	Choker	Vertical Basket	Basket Hitches		Approximate Weight (Lbs. per Ft.) (Bearing-Bearing)	Nominal Body Width (Inches)*
			90°	60°	45°		
TPXCF/TPXC 1000	10,000	8,000	20,000	17,320	14,140	.40	1.5 - 3"
TPXCF/TPXC 1500	15,000	12,000	30,000	25,980	21,210	.45	1.5 - 3"
TPXCF/TPXC 2000	20,000	16,000	40,000	34,640	28,280	.51	1.5 - 3"
TPXCF/TPXC 2500	25,000	20,000	50,000	43,300	35,350	.57	2.0 - 4
TPXCF/TPXC 3000	30,000	24,000	60,000	51,960	42,420	.71	2.0 - 4"
TPXCF/TPXC 4000	40,000	32,000	80,000	69,280	56,560	.83	2.0 - 4"
TPXCF/TPXC 5000	50,000	40,000	100,000	86,600	70,700	1.14	2.5 - 5"
TPXCF/TPXC 6000	60,000	48,000	120,000	103,920	84,840	1.27	2.5 - 5"
TPXCF/TPXC 7000	70,000	56,000	140,000	121,240	98,980	1.39	2.5 - 5"
TPXCF/TPXC 8500	85,000	68,000	170,000	147,220	120,190	1.65	3.0 - 6"
TPXCF/TPXC 10000	100,000	80,000	200,000	173,200	141,400	1.84	3.0 - 6"
TPXCF/TPXC 12500	125,000	100,000	250,000	216,500	176,750	2.35	4.0 - 8"
TPXCF/TPXC 15000	150,000	120,000	300,000	259,800	212,100	2.66	4.0 - 8"
TPXCF/TPXC 17500	175,000	140,000	350,000	303,100	247,450	3.14	4.0 - 8"
TPXCF/TPXC 20000	200,000	160,000	400,000	346,400	282,800	3.45	5.0 - 10"
TPXCF/TPXC 25000	250,000	200,000	500,000	433,000	353,500	4.07	5.0 - 10"
TPXCF/TPXC 27500	275,000	220,000	550,000	476,300	388,850	4.61	6.0 - 12"
TPXCF/TPXC 30000	300,000	240,000	600,000	519,600	424,200	4.92	6.0 - 12"
TPXCF/TPXC 40000	400,000	320,000	800,000	692,800	565,600	6.54	7.0 - 14"
TPXCF/TPXC 50000	500,000	400,000	1,000,000	866,000	707,000	8.15	8.0 - 16"
TPXCF/TPXC 60000	600,000	480,000	1,200,000	1,039,000	848,000	10.20	9.0 - 18"

*Dimensions can vary according to the hardware or bearing points the slings are used with. Minimum is "tapered" width; Maximum is the flat tubing width.

METRIC SLINGS AVAILABLE

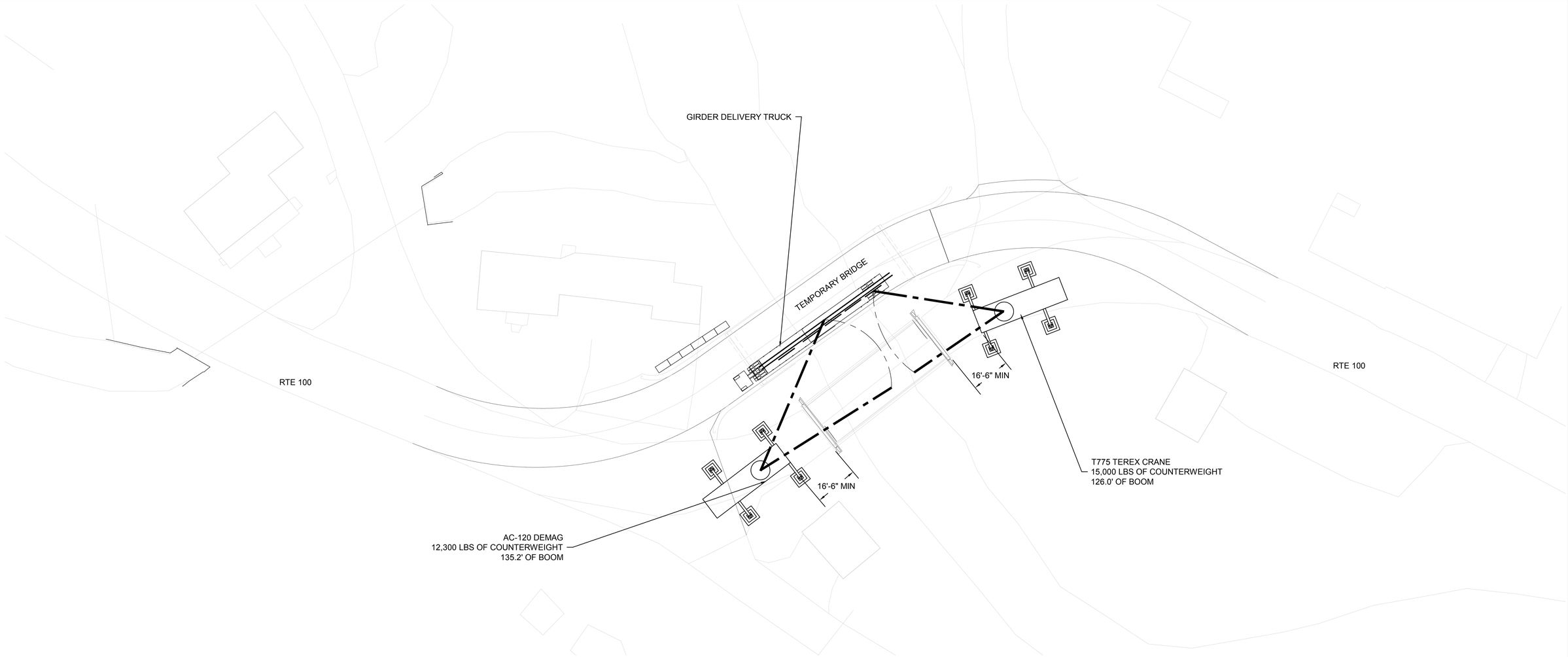

RIGGING PLAN

SCALE: 1" = 20' - 0"

REV. NO.	DATE:
1	07/06/16

RENAUD BROS. INC.
283 FT. BRIDGMAN RD.
VERNON VT., 05354
PH. (802)257-7383
FAX:(802)257-7308

SHEET NAME: RIGGING PLAN

PROJECT NAME: WARDSBORO

PROJECT NO: BRF 013-1 (15)

DRAWN BY: CE

CHK'D BY:

DATE: 06/28/2016

SHEET NO. 10 OF 11

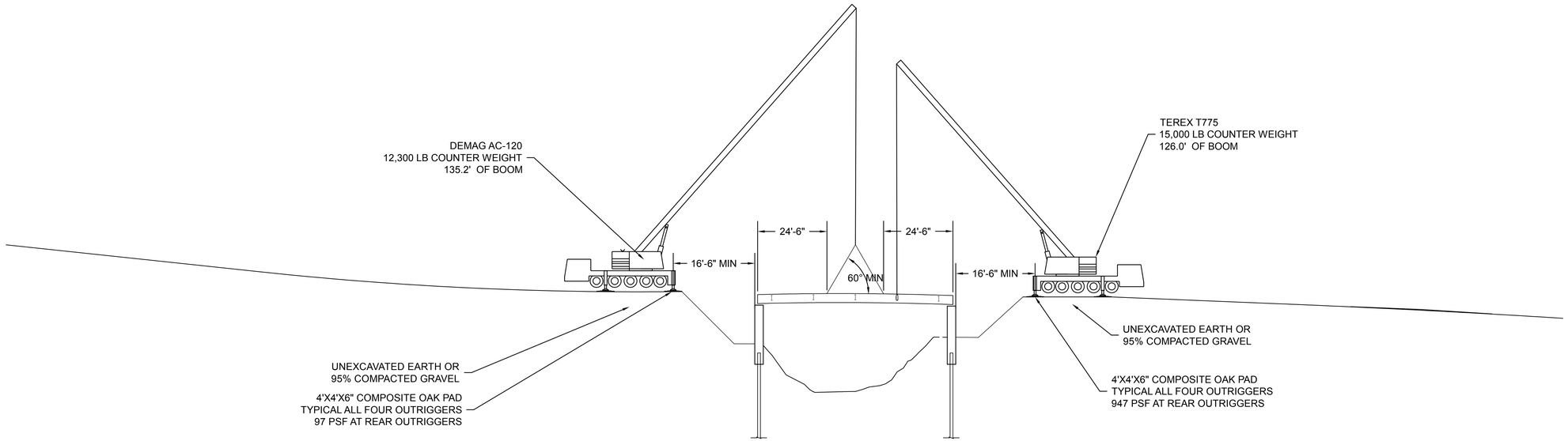

RIGGING PLAN SECTON

REV. NO.	DATE:
1	07/06/16

BRENAUD BROS. INC.
283 FT. BRIDGMAN RD.
VERNON VT., 05354
PH. (802)257-7383
FAX:(802)257-7308

SHEET NAME: RIGGING SECTION

PROJECT NAME: WARDSBORO

PROJECT NO: BRF 013-1 (15)

DRAWN BY: CE | CHK'D BY: | DATE: 06/28/2016

SHEET NO. 11 OF 11