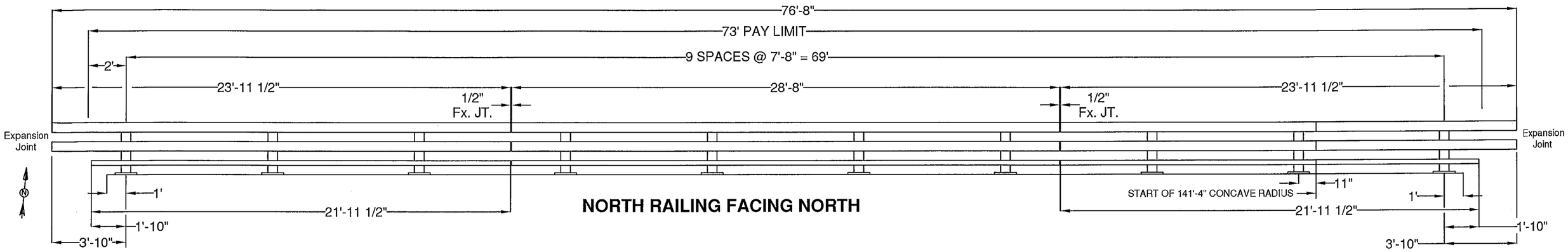

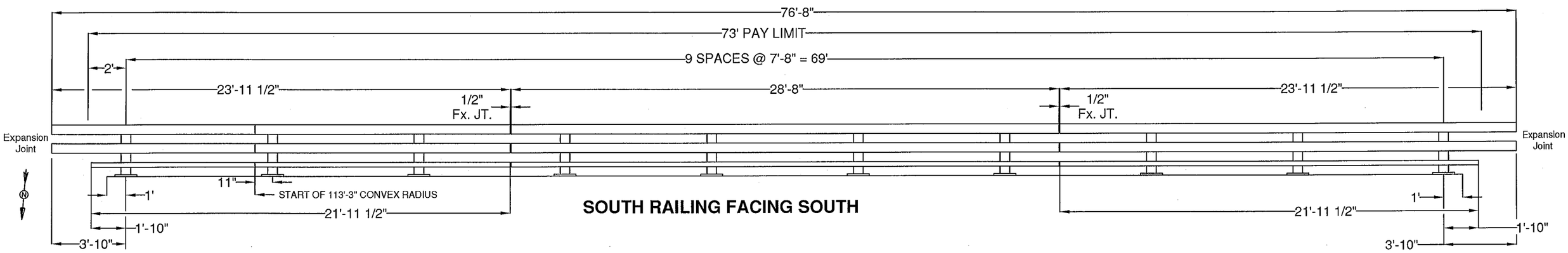

BRIDGE POST DETAIL

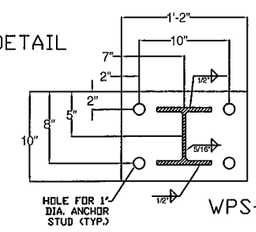

WPS-3008

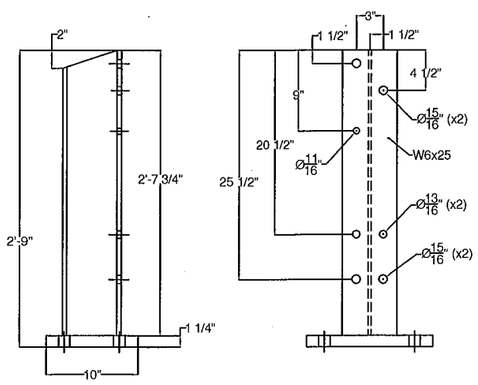

BILL OF MATERIAL

ITEM #	QTY	PART #	DESCRIPTION	ASTM DESIGNATION
1	20	0033.03610	W6x25, THREE RAIL POST @ 2'-9" OA ON 1 1/4x10x1'-2" B.P.	A572 Gr. 50
2	2	0033.22200	HSS 3" X 5" X 1/4" RAIL @ 21'-11 1/2"	A500 Gr. B
3	1	0033.22200	HSS 3" X 5" X 1/4" RAIL @ 21'-11 1/2" W/ PARTIAL 141'-4" CONCAVE	A500 Gr. B
4	1	0033.22200	HSS 3" X 5" X 1/4" RAIL @ 21'-11 1/2" W/ PARTIAL 113'-3" CONVEX	A500 Gr. B
5	2	0033.12800	HSS 3" X 5" X 1/4" RAIL @ 28'-8"	A500 Gr. B
6	4	0033.62400	HSS 6" X 6" X 3/16" RAIL @ 23'-11 1/2"	A500 Gr. B
7	2	0033.62400	HSS 6" X 6" X 3/16" RAIL @ 23'-11 1/2" W/ PARTIAL 141'-4" CONCAVE	A500 Gr. B
8	2	0033.62400	HSS 6" X 6" X 3/16" RAIL @ 23'-11 1/2" W/ PARTIAL 113'-3" CONVEX	A500 Gr. B
9	4	0033.52808	HSS 6" X 6" X 3/16" RAIL @ 28'-8"	A500 Gr. B
10	4	0033.00840	2-1/8" X 4-1/4" FIX. SPLICE BAR @ 2'-3"	A572 Gr. 50
11	8	0033.00640	HSS 5" X 5" X 5/16" FIX. SPLICE TUBE @ 2'-3"	A500 Gr. B, A572 Gr. 50
12	20	0033.00220	3/8" X 10" X 14" ANCHOR PLATES	A36
13	20	0033.90050	1/8" X 10" X 14" FABRIC PAD	AASHTO M251
14	*82	0042.21013	ø 1" X 13" ANCHOR STUDS, W/ 2 1/4" THD. EACH END	A449
15	*162	0080.18901	ø 1" HEAVY HEX NUTS	A563 DH
16	80	0080.18911	ø 1" FLAT WASHERS	F436
17	80	0080.18905	ø 1" HEX JAM NUTS	A563 DH
18	80	0080.07500	ø 7/8" X 8" ROUND HEAD BOLT, NUT, SQ. WASHER, L.W.	A449, A563 DH, F436, ASME D18.2
19	20	0080.06400	ø 3/4" X 8" HEX BOLT, NUT, (2) F.W., & L.W.	A325, A563 DH, F436, & ASME D18.2
20	40	0080.06140	ø 3/4" X 2-3/4" HEX BOLT, NUT, (2) F.W., & L.W.	A325, A563 DH, F436, & ASME D18.2
21	32	0080.06340	ø 3/4" X 7-1/2" HEX BOLT, NUT, & (2) F.W.	A325, A563 DH, & F436
22	16	0080.06255	ø 3/4" X 4-1/2" HEX BOLT, NUT, & (2) F.W.	A325, A563 DH, & F436
23	20	0033.00500	L5" X 5" X 5/8" RAILING ANGLE @ 6"	A572 Gr. 50
24	6	-- --	DELINEATORS - NOT SHOWN	(SUPPLIED BY CUSTOMER)

*-2 EXTRA FOR VOAT TESTING

ALL BRIDGE, APPROACH AND GUARDRAIL SHALL BE PAINTED BLACK (CHIP COLOR #27038) EXCEPT HARDWARE & ANCHORAGE CAST IN CONCRETE.

ITEM #: 525.335

SHEET 1 OF 2

STRUCTURAL STEEL TO COMPLY W/ ASTM A6

TOLERANCE UNLESS OTHERWISE NOTED:
FRACTIONS = ± 1/16"
ANGLES = ± 1/2°
DIAMETERS = ± 1/32"

BRIDGE RAIL DETAILS SHEET

VT. ROUTE 100 - (MINOR ARTERIAL), BRIDGE # 68
TOWN OF WARDSBORO, COUNTY OF WINDHAM, VT.

REV	NO.	DATE	DESCRIPTION	BY
E	1	11/18/15	REVISED PER CAD DWG REC'D	E.P.
V				

REV	NO.	DATE	DESCRIPTION	BY
E				
V				

ELDERLEE, INC.
OAKS CORNERS, NEW YORK 14518
E-Mail: dlong@elderlee.com, epeek@elderlee.com
Tel: 315-789-6670 Fax: 315-789-6615

AISC CERTIFIED FABRICATOR

DRAWN	E.P.	11/5/15
CHECKED	D.L.	.
APPROVED	.	.
SCALE	SCHEMATIC	

DRAWING NO. F.R. LaFAYETTE-WARDSBORO (15)

SPLICE BAR - FIXED

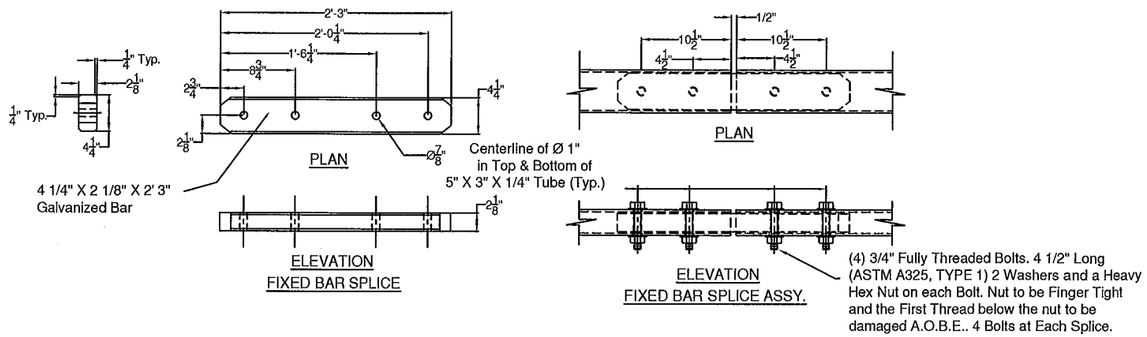

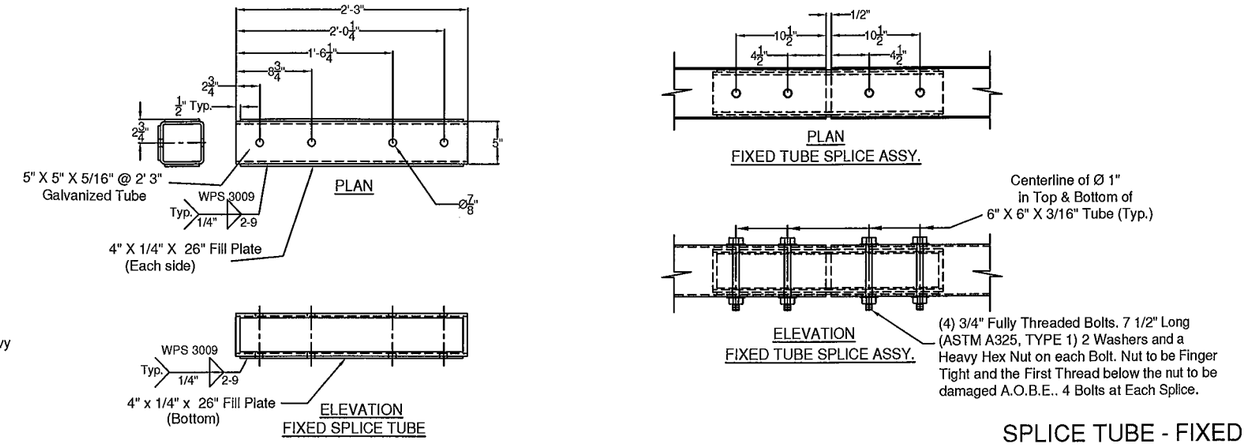

SPLICE TUBE - FIXED

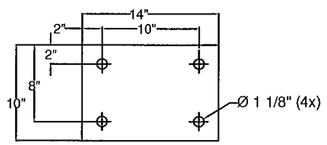

1/8" FABRIC PAD

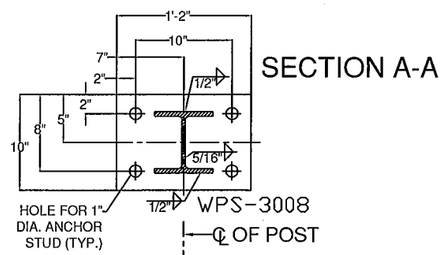

SECTION A-A

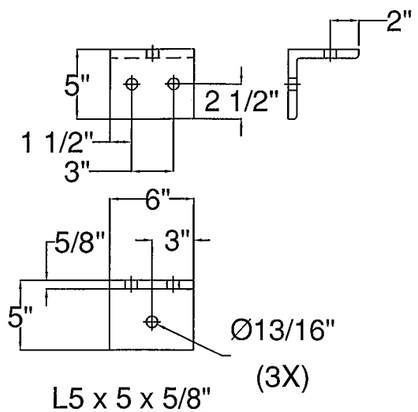

L5 x 5 x 5/8"
RAILING ANGLE

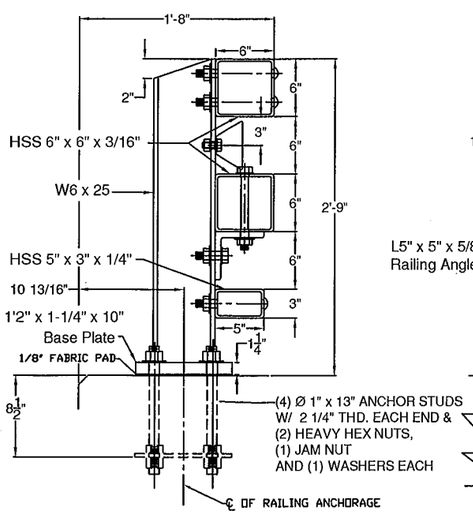

SECTION

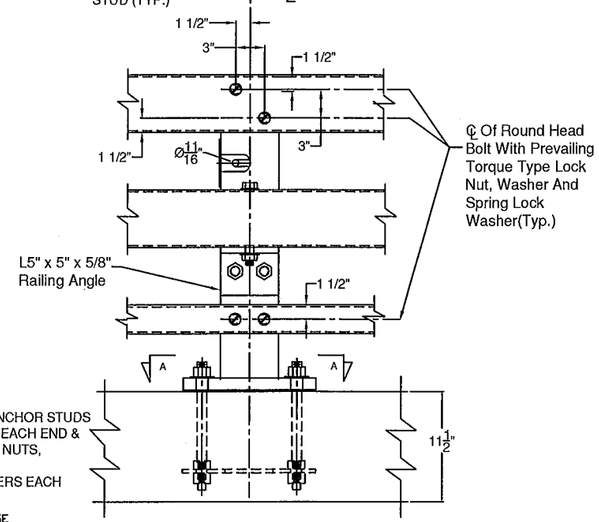

ELEVATION

STEEL BRIDGE RAILING

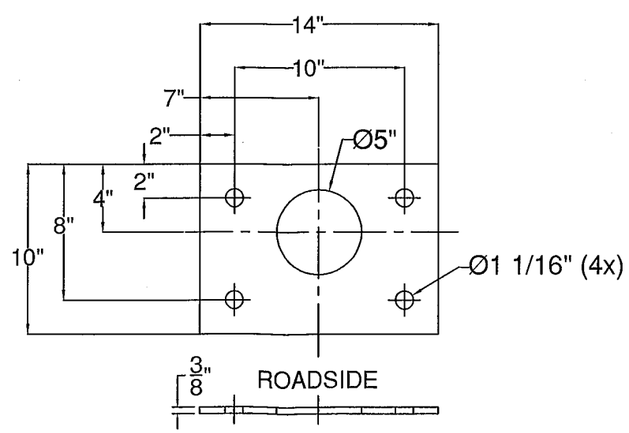

ANCHOR PLATE

GENERAL NOTES:

1) ALL RAILING IS TO BE FABRICATED AND ERECTED ACCORDING TO SECTION 525 OF THE STANDARD SPECIFICATIONS.
2) PRIOR TO GALVANIZING THE ASSEMBLED POST, GRIND ALL EDGES TO A MINIMUM RADIUS OF 1/16".
3) ALL POST SHALL BE SET NORMAL TO GRADE. THE MAXIMUM CENTER TO CENTER SPACING OF BRIDGE RAIL POST IS 8' 3"
4) SECTIONS OF RAIL TUBE SHALL BE ATTACHED TO A MINIMUM OF TWO BRIDGE POSTS AND PREFERABLY TO AT LEAST 4 POSTS.
5) RAIL TUBE EXPANSION JOINTS SHALL BE PROVIDED IN ANY RAIL BAY SPANNING THE END OF AN INTEGRAL ABUTMENT BRIDGE AND AT ALL SUPER STRUCTURE EXPANSION JOINTS. EXPANSION JOINT WIDTH SHALL BE 4"@ 68°F AND WILL BE ADJUSTED IN THE FIELD BY THE ENGINEER FOR OTHER TEMPERATURES.
6) STD. SPLICE HOLES ONLY IN BRIDGE RAIL TUBES. REST TO BE DRILLED BY CUSTOMER. FIELD DRILLED HOLES TO BE COATED WITH AN APPROVED ZINC-RICH PAINT PRIOR TO INSTALLATION.
7) BOLTS SHALL BE TORQUED SNUG TIGHT (APPROXIMATELY 100 FT-LB).
8) SEE STANDARD DRAWING G-I FOR DETAILS OF DELINEATORS. A DELINEATOR SHALL BE INSTALLED AT 30 FOOT SPACING OR THE NEAREST POST. WHITE IS TO BE INSTALLED ON THE DRIVER'S RIGHT. FOR ONE WAY BRIDGES, YELLOW IS TO BE INSTALLED ON THE DRIVER'S LEFT. PAYMENT FOR DELINEATORS SHALL BE INCIDENTAL TO OTHER ITEMS.
9) ANY BENDING OF RAIL SHALL BE DONE AT THE FABRICATION PLANT ACCORDING TO A PROCEDURE PROVIDED BY THE FABRICATOR.
10) THE MINIMUM DISTANCE FROM THE POST TO AN EXPANSION JOINT SHALL BE DETERMINED BY THE MINIMUM EDGE DISTANCE OF 5" FROM ANY ANCHOR STUD TO THE END OF THE SLAB, OR THE EXPANSION JOINT RECESS POUR, IF ONE IS USED.
11) PROTRUSIONS CAUSED BY WELDING OR GALVANIZING ARE NOT PERMITTED ON THE ADJOINING SURFACES OF THE BOX BEAM RAILS, SPLICE TUBES AND FILL PLATES.
12) THIS RAILING MEETS THE REQUIREMENTS FOR A TL-4 SERVICE LEVEL.

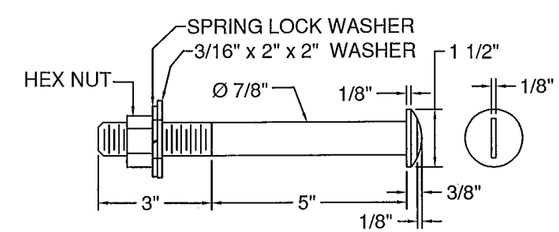

SLOTTED ROUND HEAD BOLT

ITEM #: 525.335

SHEET 2 OF 2

STRUCTURAL STEEL TO COMPLY W/ ASTM A6

TOLERANCE UNLESS OTHERWISE NOTED:
FRACTIONS = ± 1/16"
ANGLES = ± 1/2°
DIAMETERS = ± 1/32"

BRIDGE RAIL DETAILS SHEET

VT. ROUTE 100 - (MINOR ARTERIAL), BRIDGE # 68
TOWN OF WARDSBORO, COUNTY OF WINDHAM, VT.

R	NO.	DATE	DESCRIPTION	BY	R	NO.	DATE	DESCRIPTION	BY
E	1	11/18/15	REVISED PER CAD DWG REC'D	E.P.	E				
V					V				

ELDERLEE, INC.
OAKS CORNERS, NEW YORK 14518
E-Mail: dlong@elderlee.com, epeek@elderlee.com
Tel: 315-789-6670 Fax: 315-789-6615

AISC CERTIFIED FABRICATOR

DRAWN	E.P.	11/5/15
CHECKED	D.L.	.
APPROVED	.	.
SCALE	SCHEMATIC	

DRAWING NO. F.R. LaFAYETTE-WARDSBORO (15)

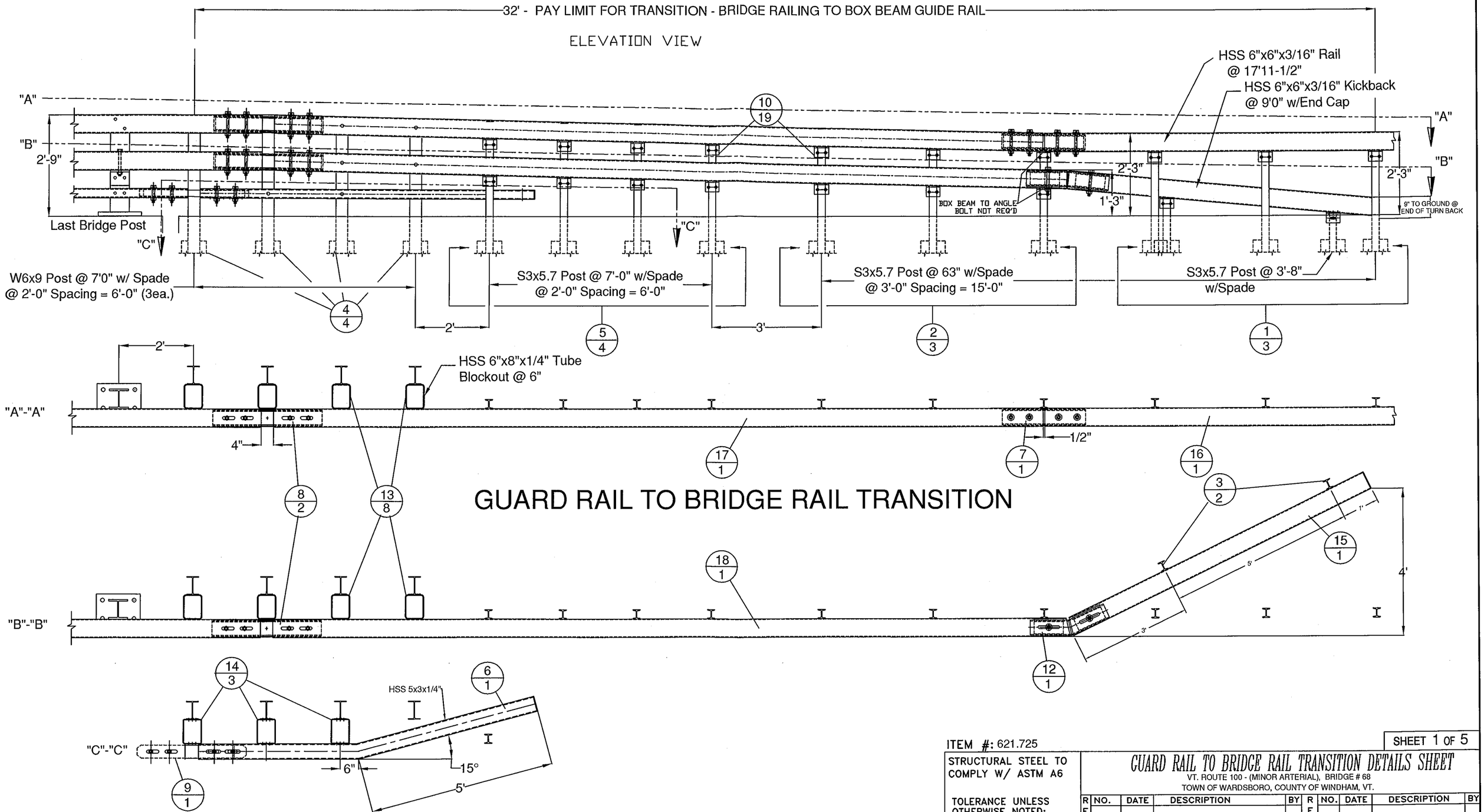

GUARD RAIL TO BRIDGE RAIL TRANSITION

ITEM #: 621.725

SHEET 1 OF 5

STRUCTURAL STEEL TO COMPLY W/ ASTM A6

TOLERANCE UNLESS OTHERWISE NOTED:
FRACTIONS = ± 1/16"
ANGLES = ± 1/2°
DIAMETERS = ± 1/32"

GUARD RAIL TO BRIDGE RAIL TRANSITION DETAILS SHEET

VT. ROUTE 100 - (MINOR ARTERIAL), BRIDGE # 68
TOWN OF WARDSBORO, COUNTY OF WINDHAM, VT.

REV	NO.	DATE	DESCRIPTION	BY	REV	NO.	DATE	DESCRIPTION	BY

ELDERLEE, INC.
OAKS CORNERS, NEW YORK 14518
E-Mail: dlong@elderlee.com / epeek@elderlee.com
Tel: 315-789-6670 Fax: 315-789-6615

AISC CERTIFIED FABRICATOR

DRAWN	E.P.	11/20/15
CHECKED	D.L.	11/24/15
APPROVED	.	.
SCALE	SCHEMATIC	

DRAWING NO. F.R. LaFAYETTE-WARDSBORO (15)-T

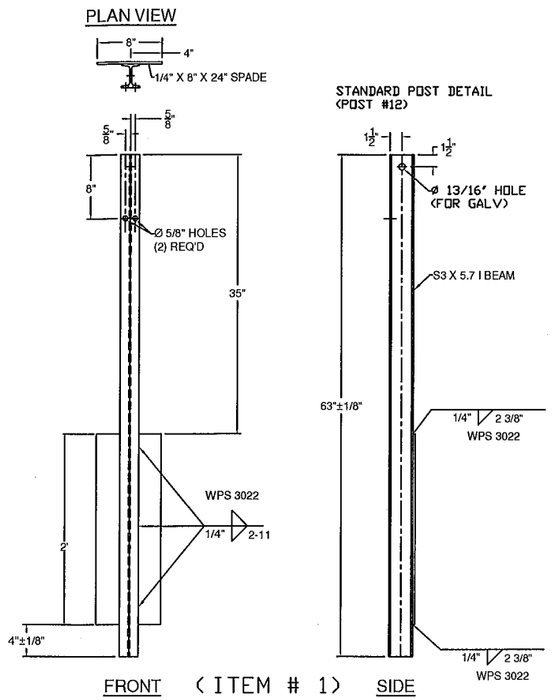

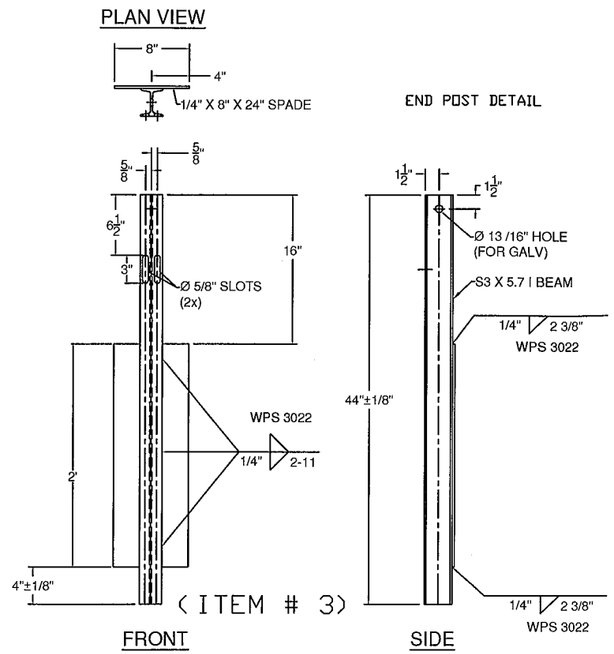

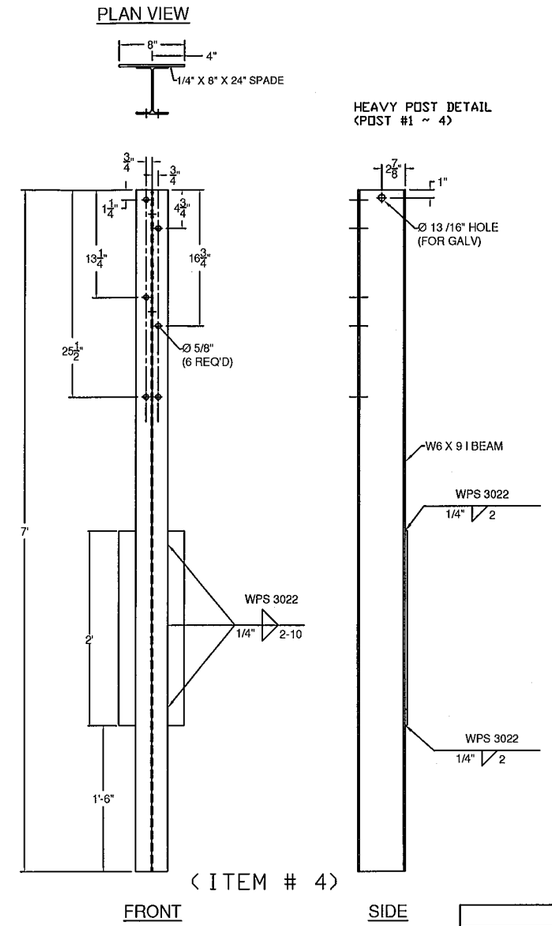

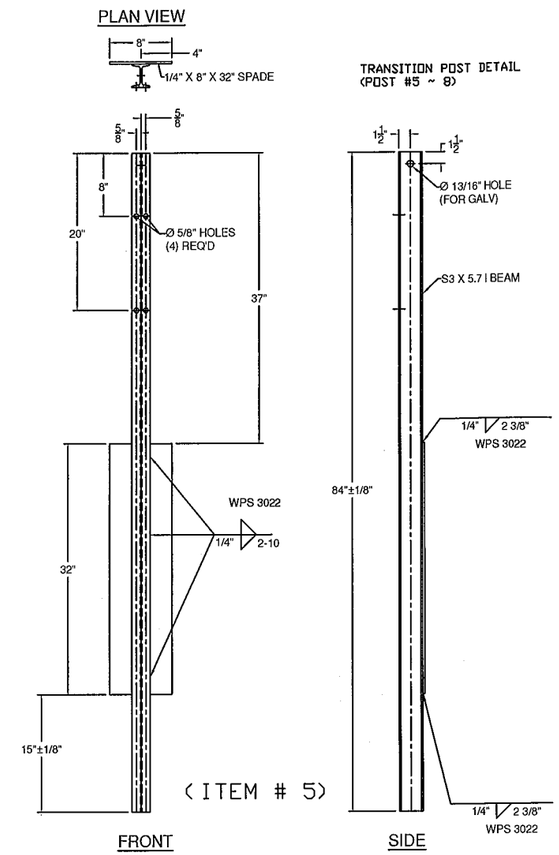

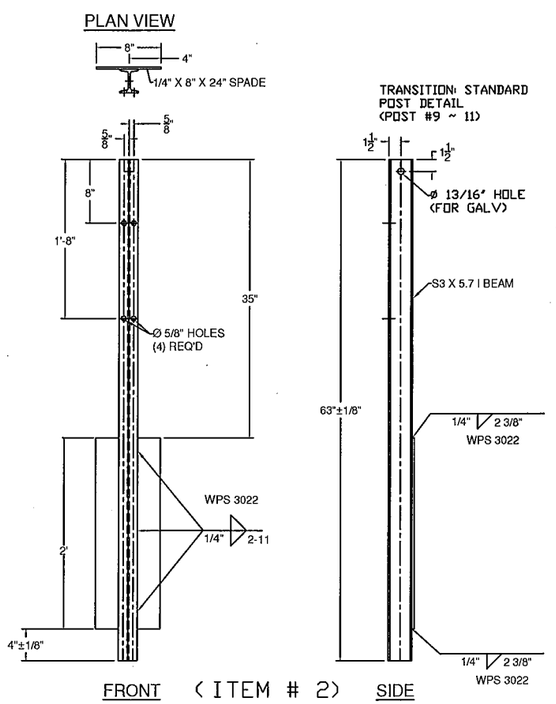

GENERAL NOTES:

1) ALL RAILING IS TO BE FABRICATED AND ERECTED ACCORDING TO SECTION 525 OF THE STANDARD SPECIFICATIONS.
2) BOLTS SHALL BE TORQUED SNUG TIGHT (APPROXIMATELY 100 FT-LB).
3) PROTRUSIONS CAUSED BY WELDING OR GALVANIZING ARE NOT PERMITTED ON THE ADJOINING SURFACES OF THE BOX BEAM RAILS, SPLICE TUBES AND FILL PLATES.
4) BOX BEAM TUBE AND STEEL POST MATERIALS, DIMENSION SIZES AND NOTES SHALL BE THE SAME AS THOSE OF THE BRIDGE RAIL, UNLESS OTHERWISE NOTED.
5) ANY BENDING OF RAIL SHALL BE DONE AT THE FABRICATION PLANT. RADII GREATER THAN 16' TO BE CURVED ON A TUBE BENDING MACHINE, RADII EQUAL OR LESS THAN 16' TO BE "PIE CUT" AND WELDED. CURVED RAILING WIIL HAVE AN 18" LENGTH ON EACH END STRAIGHT TO ACCOMADATE SPLICES. "PIE CUTS ARE LOCATED SO AS TO NOT CONFLICT WITH POST FASTENING HOLES. PIE CUTS WILL BE WELDED ACCORDING TO PROCEDURE WPS-3026.

BILL OF MATERIALS (EACH CORNER)

ITEM #	QTY.	COMPONENT #	DESCRIPTION	MATERIAL (ASTM)
1	3	0013.57021	S3 X 5.7 POST, PUNCH 8" W/SPD @ 63" LG	ASTM A572 Gr. 50
2	3	0013.57025	S3 X 5.7 POST, PUNCH 8", & 20" W/SPD @ 63" LG	ASTM A572 Gr. 50
3	2	0013.57060	S3 X 5.7 END POST W/SPD @ 3'-8" LG	ASTM A572 Gr. 50
4	4	0013.09001	W6 X 9 POST @ 7' W/SPD & 5/8" HOLES	ASTM A572 Gr. 50
5	4	0013.57010	S3 X 5.7 POST, PUNCH 8" & 20", W/8X32" SPADE @7'	ASTM A572 Gr. 50
6	1	0033.80403	3 X 5" BTM TRANS RAIL W/5'-0" KB, EXP END	A500 Gr. B
7A	1	0033.00640	HSS 5X5 TUBE SPLICE @27" LG W/ 1/4" SHIMS (WW1, 2, & 4)	A500 Gr. B / A572 Gr 50
7B	1	0033.00640	HSS 5X5 TUBE SPLICE @27" LG W/ 1/4" SHIMS (W/ 8° BEND) - WW3)	A500 Gr. B / A572 Gr 50
8	2	0033.00730	HSS 5x5 EXP TUBE SPLICE @ 36" LG W/ 1/4" SHIMS	A500 Gr. B / A572 Gr 50
9	1	0033.00930	BR EXP BAR SPLICE 2-1/8" X 4-1/4" @ 36" LG	ASTM A36
10	19	0054.00050	REG BB SHELF ANGLES @ 4-1/2"	ASTM A36
12A	1	0054.00074D	HSS 5 X 5 X 5/16" DBL BEND TUBE SPL @ 27" LG, (WW 1, 2, & 4)	A500 Gr. B / A572 Gr 50
12B	1	0054.00074E	HSS 5 X 5 X 5/16" DBL BEND TUBE SPL @ 27" LG, (WW3)	A500 Gr. B / A572 Gr 50
13	8	0054.00563	6 X 8 X 1/4" TRANS. TUBE B/D @ 6" LG	A500 Gr. B
14	3	0054.00565	6 X 8 X 1/4" TRANS. TUBE B/D @ 3" LG	A500 Gr. B
15	1	0054.090003	6 X 6 x 3/16" BB @ 9'-0" KICKBACK, W/ CAP, & 18° MITER	A500 Gr. B / A36
16	1	0057.91018	6 X 6 x 3/16" BB @ 9'-0" (THIS PAY ITEM), DRILL 3" CC, PARTIAL 16" RAD	A500 Gr. B
*17A	1	0057.91016	6 X 6 x 3/16" BB TOP TRANS @ 20'-9 5/8" LG W/EXP END (WW 1 & 4)	A500 Gr. B
*17B	1	0057.900922	6 X 6 x 3/16" BB TOP TRANS @ 20'-9 5/8" LG W/EXP END (WW 2)	A500 Gr. B
*17C	1	0057.900923	6 X 6 x 3/16" BB TOP TRANS @ 20'-9 5/8" LG W/EXP END (WW 3)	A500 Gr. B
*18A	1	0057.900932	6 X 6 x 3/16" BB BTM TRANS @ 21'-4 5/8" LG W/EXP END (WW 1 & 4)	A500 Gr. B
*18B	1	0057.900933	6 X 6 x 3/16" BB BTM TRANS @ 21'-4 5/8" LG W/EXP END (WW 2)	A500 Gr. B
*18C	1	0054.90093	6 X 6 x 3/16" BB BTM TRANS @ 21'-4 5/8" LG W/EXP END (WW 3)	A500 Gr. B
19	18	0080.03355	3/8" X 7 1/2" BOLT, NUT, & 2 FW	A307, A563 DH, F436
20	19	0080.04100	1/2" x 1-1/2" BOLT, NUT, & FW	A307, A563 DH, F436
21	22	0080.04120	1/2" x 1-1/2" BOLT, NUT, 2 FW & LW	A307, A563 DH, F436
22	4	0080.06255	3/4" X 4-1/2" BOLT, NUT, 2 FW	A325, A563 DH, F436
23	12	0080.06340	3/4" X 7-1/2" BOLT, NUT, 2 FW	A325, A563 DH, F436
24	6	0080.06370	3/4" X 8" CARR BOLT, NUT, FW & LW	A307, A563 DH, F436
25	2	0080.06400	3/4" X 8" BOLT, NUT, 2 FW, & LW	A325, A563 DH, F436

* - W/ RADIUS - PER CHART

HARDWARE NOTES

ITEM #	FUNCTION
19	BOLT RAIL TO SHELF ANGLE (ITEM #10)
20	BOLT SHELF ANGLE (ITEM #'S 10 & 11) TO POST
21	BOLT BLOCK-OUTS (ITEM #'S 13 & 14) TO HEAVY POST
22	(4) PER SPLICE BAR (ITEM #9)
23	(4) PER SPLICE TUBING (ITEM #'S 7 & 8)
24	BOLT RAIL (ITEMS #'S 6,17, & 18 TO BLOCK-OUTS (ITEM #'S 13 & 14) [WHERE FASTENED]
25	BOLT DOUBLE BEND SPLICE TUBE (ITEM #12) TO RAIL (ITEM #18) & KICKBACK (ITEM #15)

FACE OF RAIL RADIUS

WW #	RAIL #17 & 18 RADIUS
1	113'-3" CONVEX
2	141'-4" CONCAVE
3	0'-0"
4	113'-3" CONVEX

APPLICABLE NOTES IN THE BRIDGE RAIL DRAWING SHALL ALSO BE APPLICABLE ON THESE DRAWINGS

ITEM #: 621.725

SHEET 2 OF 5

STRUCTURAL STEEL TO COMPLY W/ ASTM A6

TOLERANCE UNLESS OTHERWISE NOTED:
FRACTIONS = ± 1/16"
ANGLES = ± 1/2°
DIAMETERS = ± 1/32"

GUARD RAIL TO BRIDGE RAIL TRANSITION DETAILS SHEET

VT. ROUTE 100 - (MINOR ARTERIAL), BRIDGE # 68
TOWN OF WARDSBORO, COUNTY OF WINDHAM, VT.

R E V	NO.	DATE	DESCRIPTION	BY	R E V	NO.	DATE	DESCRIPTION	BY

ELDERLEE, INC.
OAKS CORNERS, NEW YORK 14518
E-Mail: dlong@elderlee.com / epeek@elderlee.com
Tel: 315-789-6670 Fax: 315-789-6615

AISC CERTIFIED FABRICATOR

DRAWN	E.P.	11/20/15
CHECKED	D.L.	11/24/15
APPROVED	.	.
SCALE	SCHEMATIC	

DRAWING NO. F.R. LaFAYETTE-WARDSBORO (15)-T

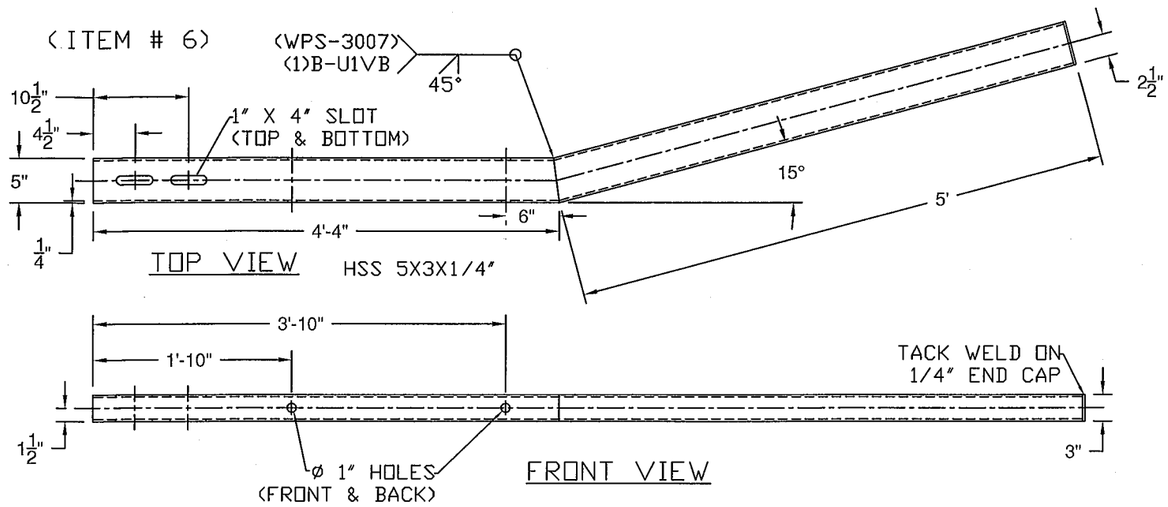

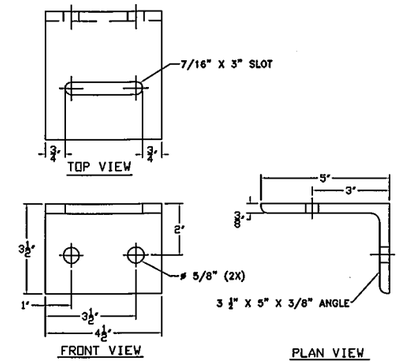

(ITEM # 10)

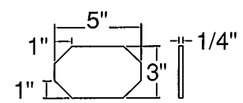

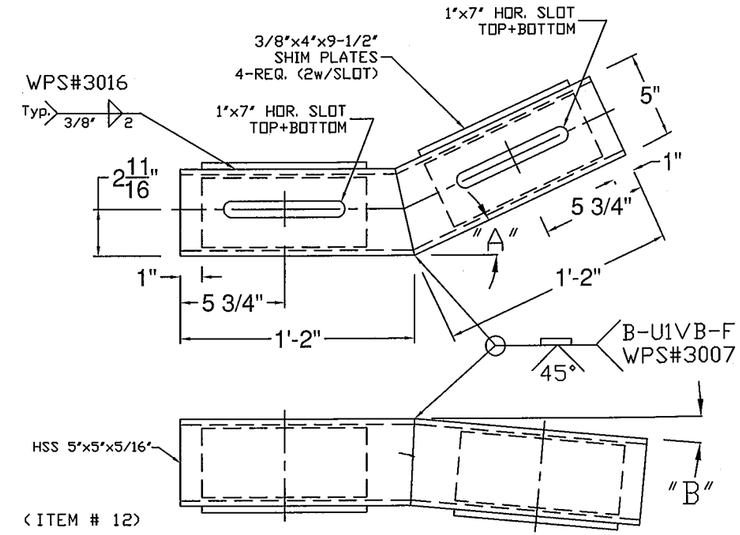

(ITEM # 12)

"A" - 36° (WW1, 2 & 4)
"A" - 44° (WW3)
"B" - TURN DOWN ANGLE SET BY THE 9" MEASURMENT AT THE END OF THE BOX BEAM.

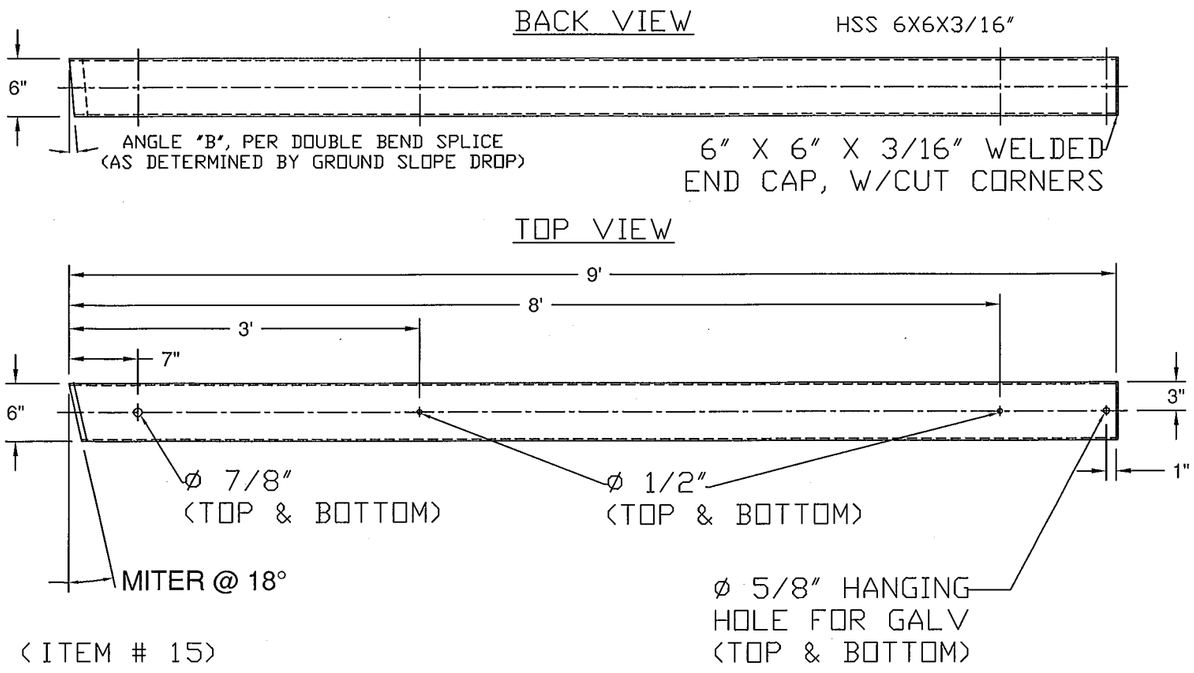

(ITEM # 15)

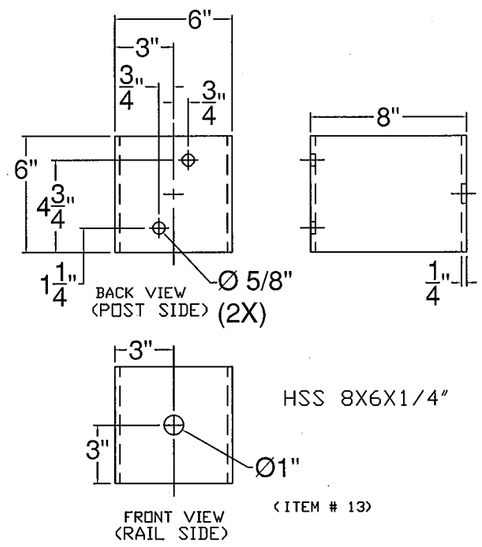

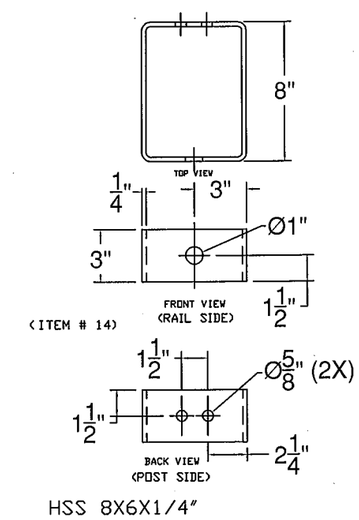

(ITEM # 14)

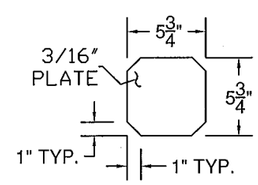

ITEM #: 621.725

SHEET 3 OF 5

STRUCTURAL STEEL TO COMPLY W/ ASTM A6

TOLERANCE UNLESS OTHERWISE NOTED:
FRACTIONS = ± 1/16"
ANGLES = ± 1/2°
DIAMETERS = ± 1/32"

GUARD RAIL TO BRIDGE RAIL TRANSITION DETAILS SHEET

VT. ROUTE 100 - (MINOR ARTERIAL), BRIDGE # 68
TOWN OF WARDSBORO, COUNTY OF WINDHAM, VT.

REV	NO.	DATE	DESCRIPTION	BY	REV	NO.	DATE	DESCRIPTION	BY

ELDERLEE, INC.
OAKS CORNERS, NEW YORK 14518
E-Mail: dlong@elderlee.com / epeek@elderlee.com
Tel: 315-789-6670 Fax: 315-789-6615

AISC CERTIFIED FABRICATOR

DRAWN	E.P.	11/20/15
CHECKED	D.L.	11/24/15
APPROVED		
SCALE	SCHEMATIC	

DRAWING NO. F.R. LaFAYETTE-WARDSBORO (15)-T

RAIL BENDING PROCEDURE:
16' RADIUS TO BE "PIE CUT" AND WELDED.

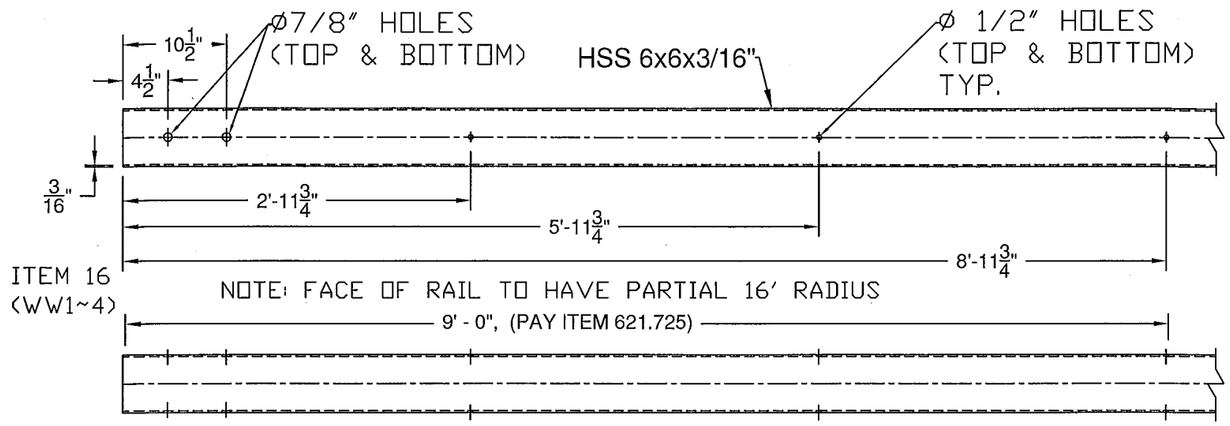

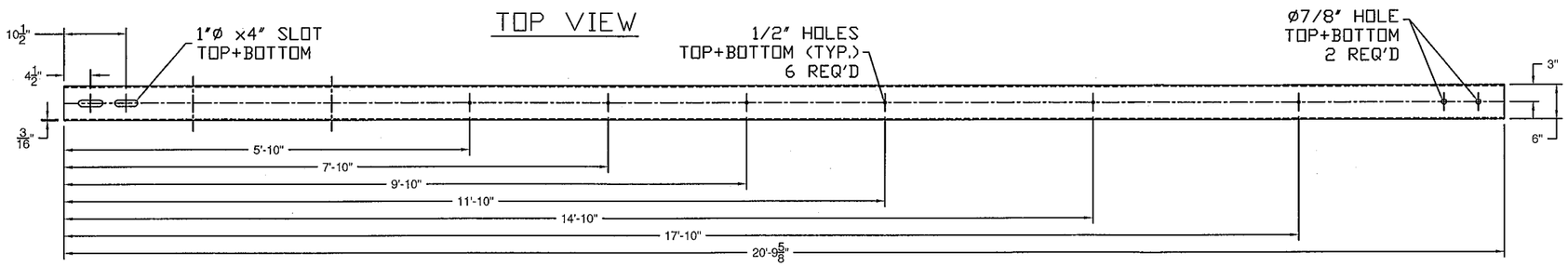

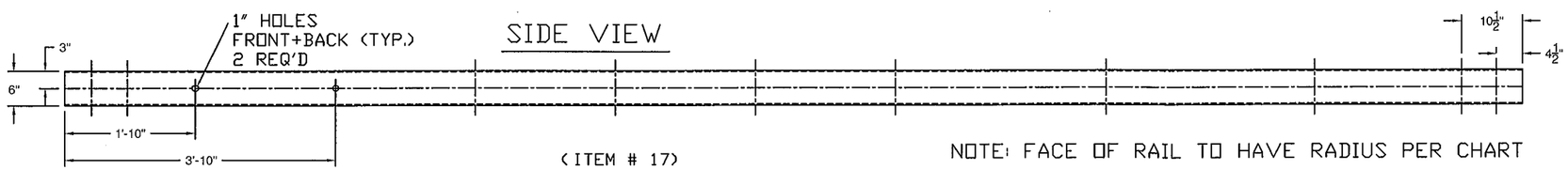

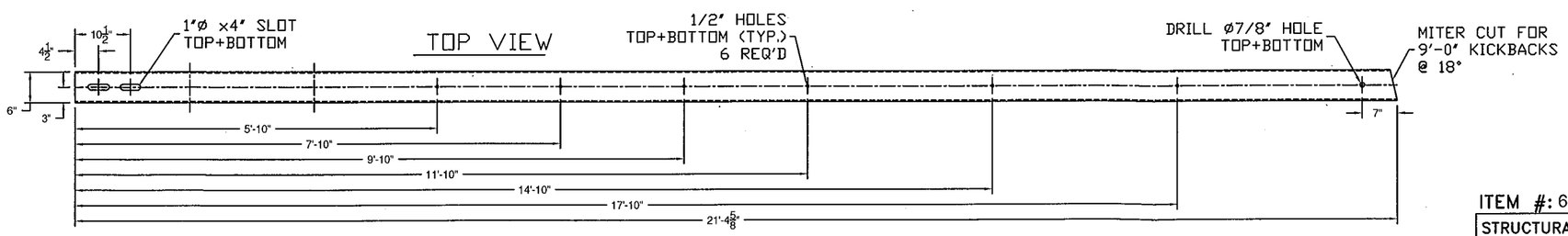

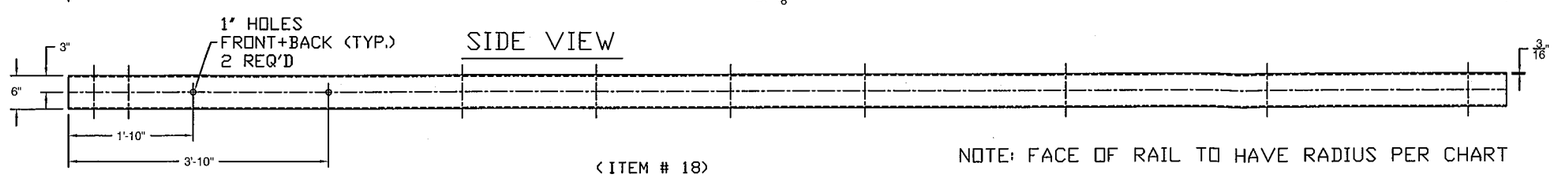

ITEM #: 621.725

SHEET 4 OF 5

STRUCTURAL STEEL TO COMPLY W/ ASTM A6

TOLERANCE UNLESS OTHERWISE NOTED:
FRACTIONS = ± 1/16"
ANGLES = ± 1/2°
DIAMETERS = ± 1/32"

GUARD RAIL TO BRIDGE RAIL TRANSITION DETAILS SHEET

VT. ROUTE 100 - (MINOR ARTERIAL), BRIDGE # 68
TOWN OF WARDSBORO, COUNTY OF WINDHAM, VT.

REV	NO.	DATE	DESCRIPTION	BY	REV	NO.	DATE	DESCRIPTION	BY

ELDERLEE, INC.
OAKS CORNERS, NEW YORK 14518
E-Mail: dlong@elderlee.com / epeek@elderlee.com
Tel: 315-789-6670 Fax: 315-789-6615

AISC CERTIFIED FABRICATOR

DRAWN	E.P.	11/20/15
CHECKED	D.L.	11/24/15
APPROVED	.	.
SCALE	SCHEMATIC	

DRAWING NO. F.R. LaFAYETTE-WARDSBORO (15)-T

SPLICE BAR - EXPANSION

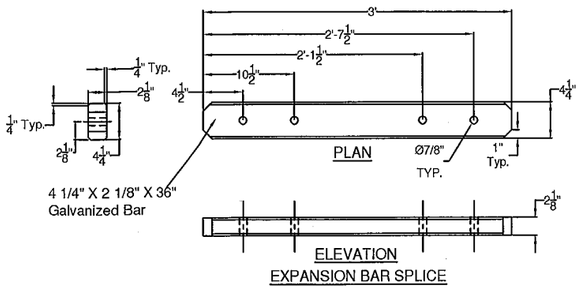

PLAN

ELEVATION
EXPANSION BAR SPLICE

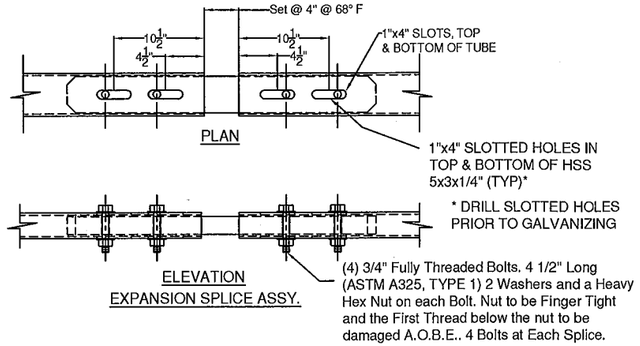

PLAN

ELEVATION
EXPANSION SPLICE ASSY.

(ITEM # 9)

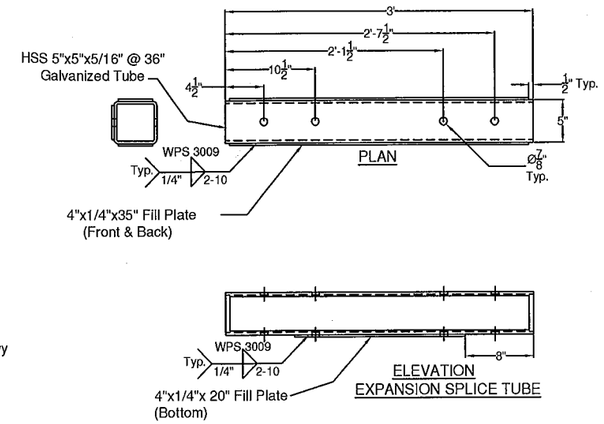

PLAN

ELEVATION
EXPANSION SPLICE TUBE

SPLICE TUBE - EXPANSION

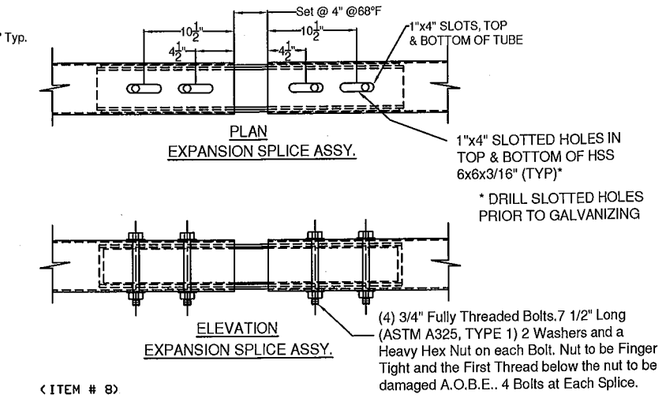

PLAN
EXPANSION SPLICE ASSY.

ELEVATION
EXPANSION SPLICE ASSY.

(ITEM # 8)

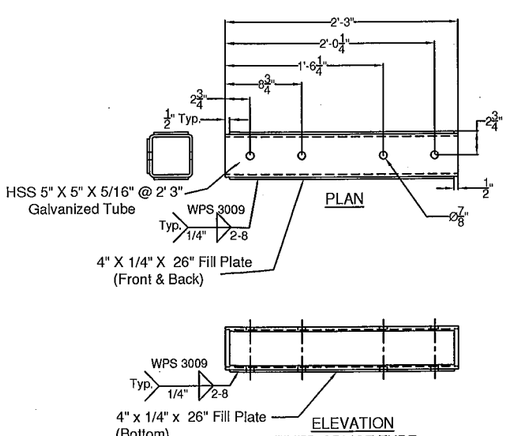

PLAN

ELEVATION
FIXED SPLICE TUBE

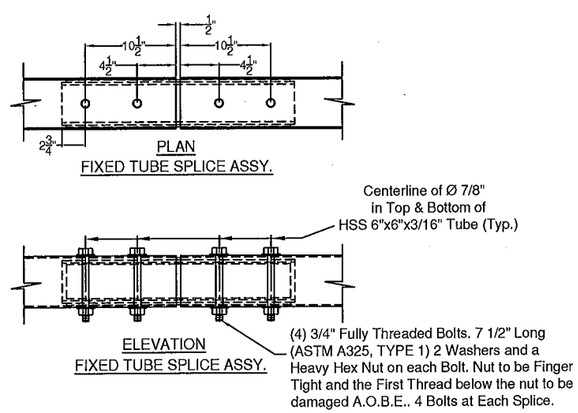

PLAN
FIXED TUBE SPLICE ASSY.

ELEVATION
FIXED TUBE SPLICE ASSY.

(ITEM # 7)

NOTE: WW3 - ITEM 7 TO HAVE 8" BEND BACK

SPLICE TUBE - FIXED

ITEM #: 621.725

SHEET 5 OF 5

STRUCTURAL STEEL TO COMPLY W/ ASTM A6

TOLERANCE UNLESS OTHERWISE NOTED:
FRACTIONS = ± 1/16"
ANGLES = ± 1/2°
DIAMETERS = ± 1/32"

GUARD RAIL TO BRIDGE RAIL TRANSITION DETAILS SHEET

VT. ROUTE 100 - (MINOR ARTERIAL), BRIDGE # 68
TOWN OF WARDSBORO, COUNTY OF WINDHAM, VT.

REV	NO.	DATE	DESCRIPTION	BY	REV	NO.	DATE	DESCRIPTION	BY

ELDERLEE, INC.
OAKS CORNERS, NEW YORK 14518
E-Mail: dlong@elderlee.com / epeek@elderlee.com
Tel: 315-789-6670 Fax: 315-789-6615

AISC CERTIFIED FABRICATOR

DRAWN	E.P.	11/20/15
CHECKED	D.L.	11/24/15
APPROVED	.	.
SCALE	SCHEMATIC	

DRAWING NO. F.R. LaFAYETTE-WARDSBORO (15)-T

WELDING PROCEDURE SPECIFICATION

PQR ELDERLEE#3

Material Specification	A500 GR B to A572 GR 50
Welding Process	FCAW-G
Manual or Machine	SEMAUTOMATIC
Position of Welding	FLAT/HORIZONTAL
Filler Metal Specification	A5.29
Filler Metal Classification	E81T1-Ni1C-JH4
Flux	N/A
Shielding Gas	CO 2 Dew Point -40DEG F Flow Rate 50CFH
Single or Multiple Pass	SINGLE
Single or Multiple Arc	SINGLE
Welding Current	DC
Polarity	REVERSE ELECTRODE POSITIVE
Welding Progression	STRINGER
Root Treatment	PER D1.5
Preheat and Interpass Temperature	PER D1.5
Postheat Temperature	NONE
Heat Input	Min _____ Max _____

WELDING PROCEDURE

Pass no.	Electrode size	Welding Current Amperes	Welding Current Volts	Travel speed	Joint detail
1	1/16	310	25	11	
Variable	LIMITS	341 TO 269	27 TO 23	12 TO 10	

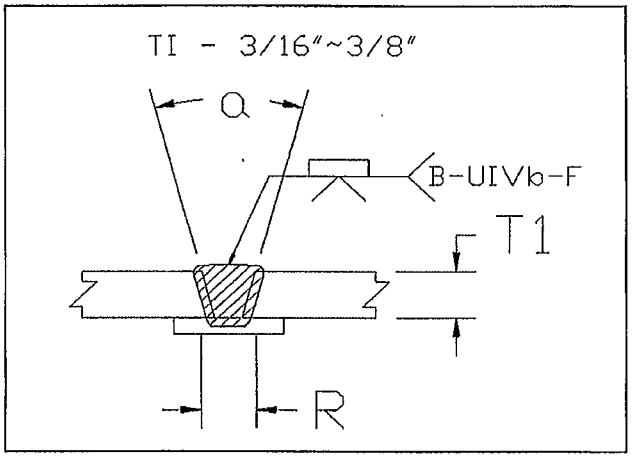

This procedure may vary due to fabrication sequence, fit-up, pass size, etc., within the limitation of variables given in Section 5.

Procedure No. 3007

Revision No. _____

Contractor Elderlee, Inc.

Authorized By RANDY SCOTT

Date 7/28/2014

WELDING PROCEDURE SPECIFICATION

PQR ELDERLEE#1

Material Specification	A572 GRD. 50 /A992-06a
Welding Process	FCAW
Manual or Machine	SEMAUTOMATIC
Position of Welding	FLAT/HORIZONTAL
Filler Metal Specification	A5.20
Filler Metal Classification	E70 LINCOLN OUTERSHEILD
Flux	N/A
Shielding Gas	CO 2 Dew Point -40DEG F Flow Rate 50 CFM (45 TO 63 CFM)
Single or Multiple Pass	SINGLE
Single or Multiple Arc	N/A
Welding Current	DC
Polarity	DCEP
Welding Progression	STRINGER
Root Treatment	PER D1.5
Preheat and Interpass Temperature	PER D1.5
Postheat Temperature	NONE
Heat Input	Min _____ Max _____

WELDING PROCEDURE

Pass no.	Electrode size	Welding Current Amperes	Welding Current Volts	Travel speed	Joint detail
1	3/32	390	27	12	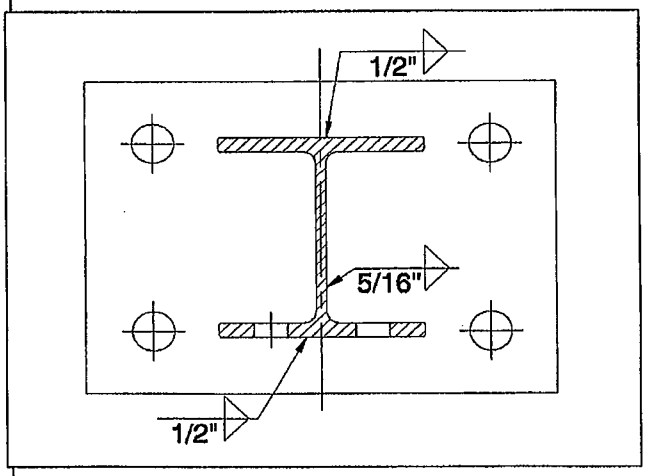
Variable	LIMITS	351 TO 429	25 TO 29	11 TO 13	

This procedure may vary due to fabrication sequence, fit-up, pass size, etc., within the limitation of variables given in Section 5.

Procedure No. 3008

Revision No. _____

Contractor Elderlee, Inc.

Authorized By RANDY SCOTT

Date 5/29/2013

WELDING PROCEDURE SPECIFICATION

PQR ELDERLEE #3

Material Specification	A709 TO A500 GR B
Welding Process	FCAW-G
Manual or Machine	SEMAUTOMATIC
Position of Welding	FLAT/HORIZONTAL
Filler Metal Specification	A5.29
Filler Metal Classification	E81T1-Ni1C-JH4
Flux	N/A
Shielding Gas	CO 2 Dew Point -40DEG F Flow Rate 50CFH
Single or Multiple Pass	SINGLE
Single or Multiple Arc	SINGLE
Welding Current	DC
Polarity	REVERSE ELECTRODE POSITIVE
Welding Progression	STRINGER
Root Treatment	D1.5
Preheat and Interpass Temperature	D1.5
Postheat Temperature	NONE
Heat Input	Min _____ Max _____

WELDING PROCEDURE

Pass no.	Electrode size	Welding Current Amperes	Welding Current Volts	Travel speed	Joint detail
1	1/16	310	25	11	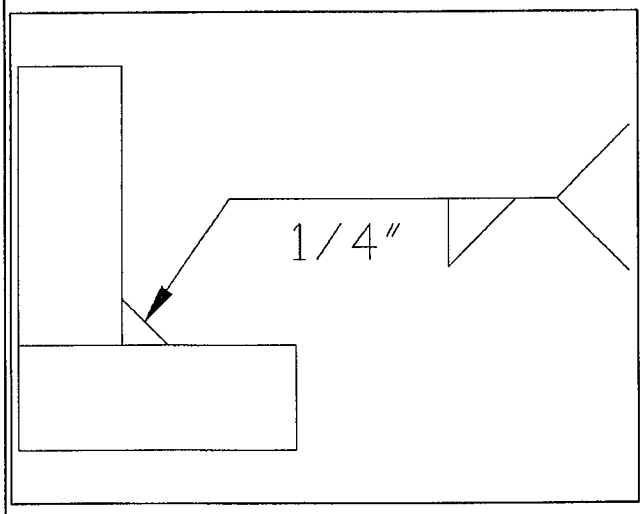
Variable	LIMITS	341 TO 269	27 TO 23	12 TO 10	

This procedure may vary due to fabrication sequence, fit-up, pass size, etc., within the limitation of variables given in Section 5.

Procedure No. 3009

Revision No. _____

Contractor Elderlee, Inc.

Authorized By RANDY SCOTT

Date 3/20/2014

WELDING PROCEDURE SPECIFICATION

PQR ELDERLEE #3

Material Specification	A500 TO A572 GR 50
Welding Process	FCAW-G
Manual or Machine	SEMAUTOMATIC
Position of Welding	FLAT/HORIZONTAL
Filler Metal Specification	A5.29
Filler Metal Classification	E81T1-Ni1C-JH4
Flux	N/A
Shielding Gas	CO 2 Dew Point -40DEG F Flow Rate 50CFH
Single or Multiple Pass	SINGLE
Single or Multiple Arc	SINGLE
Welding Current	DC
Polarity	REVERSE
Welding Progression	STRINGER
Root Treatment	PER D1.5
Preheat and Interpass Temperature	PER D1.5
Postheat Temperature	NONE
Heat Input	Min _____ Max _____

WELDING PROCEDURE

Pass no.	Electrode size	Welding Current Amperes	Welding Current Volts	Travel speed	Joint detail
1	1/16	310	25	11	
Variable	LIMITS	341 TO 269	27 TO 23	12 TO 10	

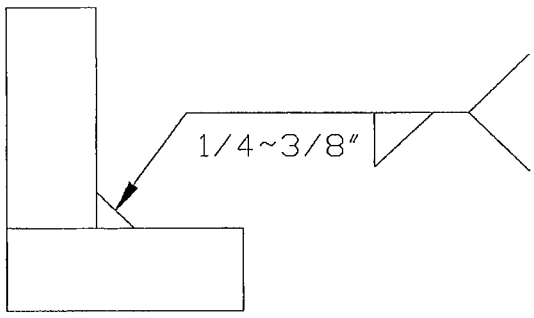

This procedure may vary due to fabrication sequence, fit-up, pass size, etc., within the limitation of variables given in Section 5.

Procedure No. 3016

Revision No. _____

Contractor Elderlee, Inc.

Authorized By RANDY SCOTT

Date 8/4/2014

WELDING PROCEDURE SPECIFICATION

Material Specification	A572 GR 50
Welding Process	GMAW
Manual or Machine	SEMIAUTOMATIC/ROBOTIC
Position of Welding	FLAT/HORIZONTAL
Filler Metal Specification	A5.18
Filler Metal Classification	L-56 LINCOLN
Flux	N/A
Shielding Gas	90% ARGON /10% CO2 Dew Point -40DEG F Flow Rate 45CFH
Single or Multiple Pass	SINGLE
Single or Multiple Arc	SINGLE
Welding Current	DC
Polarity	REVERSE
Welding Progression	STRINGER
Root Treatment	PER D1.5
Preheat and Interpass Temperature	PER D1.5
Postheat Temperature	NONE
Heat Input	Min _____ Max _____

WELDING PROCEDURE

Pass no.	Electrode size	Welding Current Amperes	Welding Current Volts	Travel speed	Joint detail
	.045	190	22	19	
Variable	LIMITS	171 TO 209	20 TO 24	17 TO 21	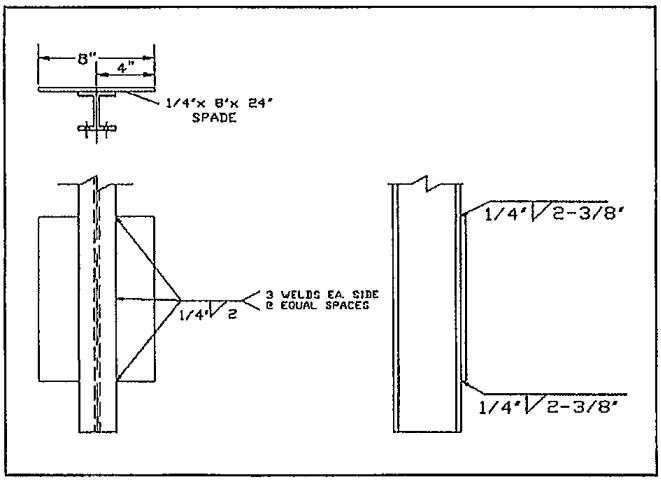

This procedure may vary due to fabrication sequence, fit-up, pass size, etc., within the limitation of variables given in Section 5.

Procedure No. 3022

Revision No. _____

Contractor Elderlee, Inc.

Authorized By RANDY SCOTT

Date 3/20/2014