BELL ENGINEERING
CIVIL & ENVIRONMENTAL
17 ECHO COVE WAY-SPOFFORD, NH 03462
(603) 363-9966

MEMO

DATE: November 13, 2015

TO: Renaud Brother Construction

FROM: Ronald K. Bell, PE
Bell Engineering

SUBJECT: Shoring Design Notes for the Scott Bridge

General Notes:

The Shoring calculations have been modified for Lattice Town truss as to address the comments of Sean T. James, PE of Holye Tanner & Associates. The shoring was modeled as a continuous 2 span beam with point loads where the needle beams are to be located. This change did not affect the sizing of the main longitudinal beams but it did result higher loads on the center column and cross beam located at pier 3. Consequently, those members required large members. An eccentric load was applied to the center columns to account for the manner in which the cross beam is attached to the columns.

Mike Renaud has decided that if there is more than 4" of snow or the bridge or the shoring that no work which would induce live loads would be conducted until after the snow is removed. Consequently, I analyzed the main beams separately for: Dead and live load, dead and snow loads and for dead, live and snow loads. This allowed for an analysis of the deflections for the various conditions.

A 115 mph wind load was applied to the bridge using for Risk Category II and exposure B. Because the bridge can be considered open, under case I of ASCE 7-10 one section (81.5') of the bridge has a base shear of 12.82 kips. However, the min. 16 psf load of ASCE 27.4.7 governed which results in a base shear of 24.27 kps on one section. This load was apportioned to the needle beams and to the weak axis of the W36x210 longitudinal beams. The beams are adequate to carry the lateral load and the beam support "H" structures do not experience overturning due to the stabilizing affect of the dead loads. The effects of the lateral wind load was added to the base plate and concrete point load analysis.

Load Considerations:

To be conservative in the design of the shoring I assumed the full dead and snow loads provided by Holy Tanner for the existing bridge (did not reduce any weight to account for material being removed from the bridge) and added the following loads:

Under scaffolding:
10 psf dead for the scaffolding (both sides - 12' wide)
45 psf for snow load (both sides - 12' wide)
25 psf for live load over the 12' width of the
scaffolding sections on each side of the bridge

For the main bridge:
25 psf live load over an 8' center section. This loading scheme provided some overlap between the existing bridge deck and the below bridge scaffolding (32' total width per foot of bridge length).

The cross beams were assumed to carry the bridge dead, live and snow loads of the main bridge at a point under the trusses. These cross beams also carry dead, live and snow loads due to the under bridge scaffolding at the end points of the beam (I accounted for the extension of the strap clip by adding onto the beam length).

The scaffolding bar joists are 12" deep with a 5/8" bar web and are a 12K1 joist with a safe factored uniform load of 361 #s/ln. ft. which at 4' o.c. will safely carry the factored dead and live load of 208#/ln.ft. The guard rail posts were analyzed with a horizontal 50#s/ln.ft applied to the top rail. The 2x6 sleepers were analyzed under wet conditions without adding a factor for the flat use (least axis bending to be conservative). A section modulus of the sleepers and the plywood was calculated to show that the net section modulus approximately doubles relative to the independent members. However, the 2x6 sleepers were adequate without accounting for the fastened plywood.

Townshend STP SCTT (1) – Bridge Shoring Submittal

Table of Contents

Pie #3 Column Concrete Calculation

Pier # 2 Column Calculation

Pier # 3 Column Calculation

Abutment 2 Column Calculation

W 8x 31 Base Plate Calculation Pier #3 and Abutment #2 Calculation

HP 53 Base Plate Pier #2 Calculation

HP 53 Base Plate Accounting for Wind Pier #2 Calculation

W36X210 Without Snow Load Calculation

W22X44 Cross Beam at Pier #3 Calculation

W18X35 Cross Beam at Pier#2 and Abutment #2 Calculation

W12X40 Without Live Load Calculation

W12X40 No Snow Calculation

Scaffolding Plank Calculation

Scaffolding Section Calculation

Safety Rail Post Calculation

Shoring Plans

BELL ENGINEERING
CIVIL & ENVIRONMENTAL
17 ECHO COVE WAY-SPOFFORD, NH 03462
(603) 363-9966

Project Title: TOWNSHEND DAM COVERED BRIDGE
Engineer: RON BELL
Project ID: 2015-055
Project Descr: STP SCTT (1)

Printed: 13 NOV 2015, 1:06PM

Point Load on Slab

File = C:\Users\Ron\DOCUME~1\ENERCA~1\TOWNSE~1.EC6
ENERCALC, INC. 1983-2013, Build:6.13.8.31, Ver:6.13.12.31

Lic. # : KW-06009396 **Licensee : Bell Engineering**

Description : PIER #3

Code References

Calculations per ACI 318-05, IBC 2006, CBC 2007, ASCE 7-05
Load Combinations Used : ASCE 7-05

Analytical Values

d - Slab Thickness	24.0 in	Ks - Soil Modulus of Subgrade Reaction	100.0 pci
FS - Req'd Factor of Safety	3.0 : 1	Ec - Concrete Elastic Modulus	3,122.0 ksi
		f'c - Concrete Compressive Strength	2.50 ksi
		μ - Poisson's Ratio	0.150
		ϕ - LRFD Reduction Factor	0.850
		Min. Adjacent Load Distance	116.824 in

Analysis Formulas

Pn = 1.72 [(Ks R1 / Ec) 10,000 + 3.6] Fr d^2

Ks = Soil modulus of subgrade reaction
R1 = 50% plate average dimension = sqrt(PlWid * PlLen) /2
Ec = Concrete elastic modulus
Fr - Concrete modulus of rupture = 7.5 * sqrt(f'c)
d - Slab Thickness

Min Adjacent Column Distance = 1.5 * ([Ec d^3 / (12 * (1- u^2) Ks] ^ 1/4)

Ec = Concrete elastic modulus
d - Slab Thickness
u - Poisson's ratio
Ks = Soil modulus of subgrade reaction

Load & Capacity Table

Load ID	Plate (in) Wid	Plate (in) Len	R1 (in)	Applied Concentrated Load on Plate - (kip) D	Lr	L	S	W	E	Governing Ld Comb	Pu (kip)	Phi*Pn (kip)	Check
OLUMN LOA	18.00	18.00	9.00	75.76		46.40	52.22	21.36		+1.20D+0.50L+1.60S	197.7	2,047.2	Pass, FS=10.36 >= 3

BELL ENGINEERING
CIVIL & ENVIRONMENTAL
17 ECHO COVE WAY-SPOFFORD, NH 03462
(603) 363-9966

Project Title: TOWNSHEND DAM COVERED BRIDGE
Engineer: RON BELL
Project ID: 2015-055
Project Descr: STP SCTT (1)

Printed: 13 NOV 2015, 1:06PM

Point Load on Slab

File = C:\Users\Ron\DOCUME~1\ENERCA~1\TOWNSE~1.EC6
ENERCALC, INC. 1983-2013, Build:6.13.8.31, Ver:6.13.12.31

Lic. # : KW-06009396 **Licensee : Bell Engineering**

Description : PIER #3

Code References

Calculations per ACI 318-05, IBC 2006, CBC 2007, ASCE 7-05
Load Combinations Used : ASCE 7-05

Analytical Values

d - Slab Thickness	24.0 in	Ks - Soil Modulus of Subgrade Reaction	100.0 pci
FS - Req'd Factor of Safety	3.0 : 1	Ec - Concrete Elastic Modulus	3,122.0 ksi
		f'c - Concrete Compressive Strength	2.50 ksi
		μ - Poisson's Ratio	0.150
		ϕ - LRFD Reduction Factor	0.850
		Min. Adjacent Load Distance	116.824 in

Analysis Formulas

Pn = 1.72 [(Ks R1 / Ec) 10,000 + 3.6] Fr d^2

Ks = Soil modulus of subgrade reaction
R1 = 50% plate average dimension = sqrt(PlWid * PlLen) /2
Ec = Concrete elastic modulus
Fr - Concrete modulus of rupture = 7.5 * sqrt(f'c)
d - Slab Thickness

Min Adjacent Column Distance = 1.5 * ([Ec d^3 / (12 * (1- u^2) Ks] ^ 1/4)

Ec = Concrete elastic modulus
d - Slab Thickness
u - Poisson's ratio
Ks = Soil modulus of subgrade reaction

Load & Capacity Table

Load ID	Plate (in) Wid	Plate (in) Len	R1 (in)	Applied Concentrated Load on Plate - (kip) D	Lr	L	S	W	E	Governing Ld Comb	Pu (kip)	Phi*Pn (kip)	Check
OLUMN LOA	18.00	18.00	9.00	75.76		46.40	52.22	21.36		+1.20D+0.50L+1.60S	197.7	2,047.2	Pass, FS=10.36 >= 3

BELL ENGINEERING
CIVIL & ENVIRONMENTAL
17 ECHO COVE WAY-SPOFFORD, NH 03462
(603) 363-9966

Project Title: TOWNSHEND DAM COVERED BRIDGE
Engineer: RON BELL
Project ID: 2015-055
Project Descr: STP SCTT (1)

Printed: 13 NOV 2015, 1:20PM

Steel Column

File = C:\Users\Ron\DOCUME~1\ENERCA~1\TOWNSE~1.EC6
ENERCALC, INC. 1983-2013, Build:6.13.8.31, Ver:6.13.12.31

Lic. # : KW-06009396 **Licensee : Bell Engineering**

Description : PIER 2 COLUMN

Code References

Calculations per AISC 360-05, IBC 2006, CBC 2007, ASCE 7-05
Load Combinations Used : ASCE 7-05

General Information

Steel Section Name : **W8x31**
Analysis Method : Load Resistance Factor
Steel Stress Grade A-992, High Strength, Low Alloy, Fy =
Fy : Steel Yield 50.0 ksi
E : Elastic Bending Modulus 29,000.0 ksi
Load Combination : ASCE 7-05

Overall Column Height 5.50 ft
Top & Bottom Fixity Top Free, Bottom Fixed
Brace condition for deflection (buckling) along columns :
X-X (width) axis :
Unbraced Length for X-X Axis buckling = 5.50 ft, K = 1.0
Y-Y (depth) axis :
Unbraced Length for Y-Y Axis buckling = 5.50 ft, K = 1.0

Applied Loads

Service loads entered. Load Factors will be applied for calculations.

Column self weight included : 170.745 lbs * Dead Load Factor
AXIAL LOADS . . .
Axial Load at 5.50 ft, D = 18.540, L = 10.392, S = 11.097 k

DESIGN SUMMARY

Bending & Shear Check Results

PASS Max. Axial+Bending Stress Ratio = **0.1196** : 1
Load Combination +1.20D+0.50L+1.60S
Location of max.above base 0.0 ft
At maximum location values are . . .
Pu 45.404 k
0.9 * Pn 379.584 k
Mu-x 0.0 k-ft
0.9 * Mn-x : 113.877 k-ft
Mu-y 0.0 k-ft
0.9 * Mn-y : 52.791 k-ft

PASS Maximum Shear Stress Ratio = **0.0** : 1
Load Combination
Location of max.above base 0.0 ft
At maximum location values are . . .
Vu : Applied 0.0 k
Vn * Phi : Allowable 0.0 k

Maximum SERVICE Load Reactions . .
Top along X-X 0.0 k
Bottom along X-X 0.0 k
Top along Y-Y 0.0 k
Bottom along Y-Y 0.0 k

Maximum SERVICE Load Deflections . . .
Along Y-Y 0.0 in at 0.0 ft above base
for load combination :
Along X-X 0.0 in at 0.0 ft above base
for load combination :

Maximum Deflections for Load Combinations - Unfactored Loads

Load Combination	Max. X-X Deflection		Distance		Max. Y-Y Deflection		Distance	
D Only	0.0000	in	0.000	ft	0.000	in	0.000	ft
L Only	0.0000	in	0.000	ft	0.000	in	0.000	ft
S Only	0.0000	in	0.000	ft	0.000	in	0.000	ft
D+L	0.0000	in	0.000	ft	0.000	in	0.000	ft
D+S	0.0000	in	0.000	ft	0.000	in	0.000	ft
D+L+S	0.0000	in	0.000	ft	0.000	in	0.000	ft

Steel Section Properties : W8x31

BELL ENGINEERING
CIVIL & ENVIRONMENTAL
17 ECHO COVE WAY-SPOFFORD, NH 03462
(603) 363-9966

Project Title: TOWNSHEND DAM COVERED BRIDGE
Engineer: RON BELL
Project ID: 2015-055
Project Descr: STP SCTT (1)

Printed: 13 NOV 2015, 1:20PM

Steel Column

File = C:\Users\Ron\DOCUME~1\ENERCA~1\TOWNSE~1.EC6
ENERCALC, INC. 1983-2013, Build:6.13.8.31, Ver:6.13.12.31

Lic. # : KW-06009396 **Licensee : Bell Engineering**

Description : PIER 2 COLUMN

Steel Section Properties : W8x31

Depth	=	8.000	in	I xx	=	110.00	in^4	J	=	0.536	in^4
Web Thick	=	0.285	in	S xx	=	27.50	in^3	Cw	=	530.00	in^6
Flange Width	=	8.000	in	R xx	=	3.470	in				
Flange Thick	=	0.435	in	Zx	=	30.400	in^3				
Area	=	9.120	in^2	I yy	=	37.100	in^4				
Weight	=	31.044	plf	S yy	=	9.270	in^3	Wno	=	15.100	in^2
Kdesign	=	0.829	in	R yy	=	2.020	in	Sw	=	13.200	in^4
K1	=	0.750	in	Zy	=	14.100	in^3	Qf	=	6.350	in^3
rts	=	2.260	in	rT	=	2.180	in	Qw	=	15.000	in^3
Ycg	=	0.000	in								

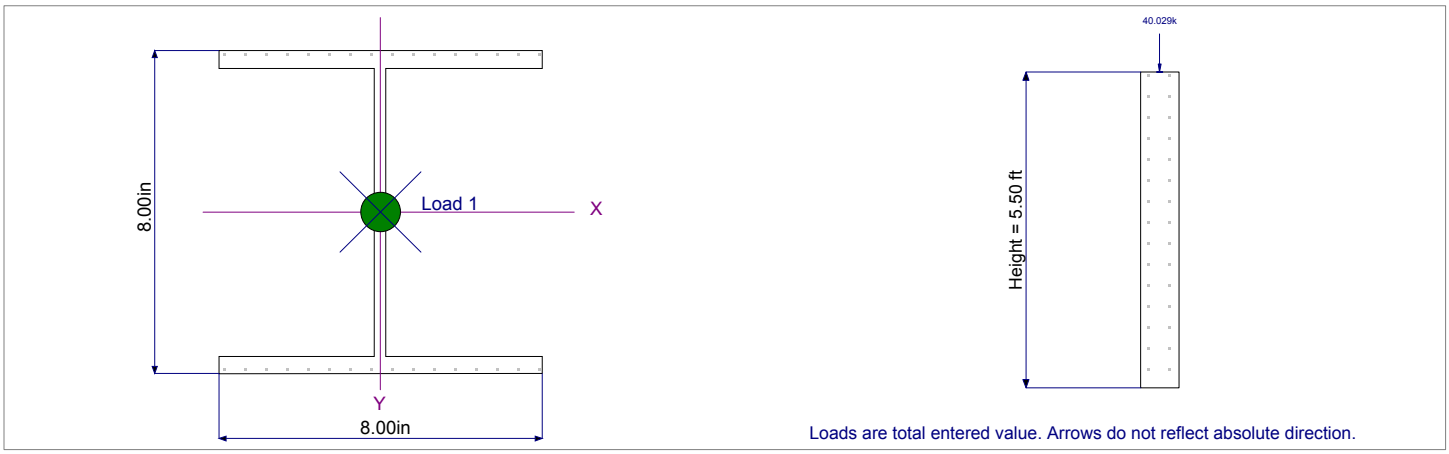

BELL ENGINEERING
CIVIL & ENVIRONMENTAL
17 ECHO COVE WAY-SPOFFORD, NH 03462
(603) 363-9966

Project Title: TOWNSHEND DAM COVERED BRIDGE
Engineer: RON BELL
Project ID: 2015-055
Project Descr: STP SCTT (1)

Printed: 13 NOV 2015, 1:19PM

Steel Column

File = C:\Users\Ron\DOCUME~1\ENERCA~1\TOWNSE~1.EC6
ENERCALC, INC. 1983-2013, Build:6.13.8.31, Ver:6.13.12.31

Lic. # : KW-06009396 **Licensee : Bell Engineering**

Description : PIER #3 COLUMN

Code References

Calculations per AISC 360-05, IBC 2006, CBC 2007, ASCE 7-05
Load Combinations Used : ASCE 7-05

General Information

Steel Section Name : **W12x58**
Analysis Method : Load Resistance Factor
Steel Stress Grade
Fy : Steel Yield 36.0 ksi
E : Elastic Bending Modulus 29,000.0 ksi
Load Combination : ASCE 7-05

Overall Column Height 8.50 ft
Top & Bottom Fixity Top Free, Bottom Fixed
Brace condition for deflection (buckling) along columns :
X-X (width) axis :
Unbraced Length for X-X Axis buckling = 8.50 ft, K = 1.0
Y-Y (depth) axis :
Unbraced Length for Y-Y Axis buckling = 8.50 ft, K = 1.0

Applied Loads

Service loads entered. Load Factors will be applied for calculations.

Column self weight included : 491.878 lbs * Dead Load Factor
AXIAL LOADS . . .
Axial Load at 8.50 ft, Yecc = 6.500 in, D = 75.760, L = 46.399, S = 52.216 k

DESIGN SUMMARY

Bending & Shear Check Results

PASS Max. Axial+Bending Stress Ratio = **0.8006** : 1
Load Combination +1.20D+0.50L+1.60S
Location of max.above base 0.0 ft
At maximum location values are . . .
Pu 198.247 k
0.9 * Pn 504.94 k
Mu-x -107.064 k-ft
0.9 * Mn-x : 233.280 k-ft
Mu-y 0.0 k-ft
0.9 * Mn-y : 87.750 k-ft

PASS Maximum Shear Stress Ratio = **0.0** : 1
Load Combination
Location of max.above base 0.0 ft
At maximum location values are . . .
Vu : Applied 0.0 k
Vn * Phi : Allowable 0.0 k

Maximum SERVICE Load Reactions . .
Top along X-X 0.0 k
Bottom along X-X 0.0 k
Top along Y-Y 0.0 k
Bottom along Y-Y 0.0 k

Maximum SERVICE Load Deflections . . .
Along Y-Y 0.4252 in at 8.50 ft above base
for load combination :D+L+S
Along X-X 0.0 in at 0.0 ft above base
for load combination :

Maximum Deflections for Load Combinations - Unfactored Loads

Load Combination	Max. X-X Deflection		Distance		Max. Y-Y Deflection		Distance	
D Only	0.0000	in	0.000	ft	0.185	in	8.500	ft
L Only	0.0000	in	0.000	ft	0.113	in	8.500	ft
S Only	0.0000	in	0.000	ft	0.127	in	8.500	ft
D+L	0.0000	in	0.000	ft	0.298	in	8.500	ft
D+S	0.0000	in	0.000	ft	0.312	in	8.500	ft
D+L+S	0.0000	in	0.000	ft	0.419	in	8.443	ft

Steel Section Properties : W12x58

BELL ENGINEERING
CIVIL & ENVIRONMENTAL
17 ECHO COVE WAY-SPOFFORD, NH 03462
(603) 363-9966

Project Title: TOWNSHEND DAM COVERED BRIDGE
Engineer: RON BELL
Project ID: 2015-055
Project Descr: STP SCTT (1)

Printed: 13 NOV 2015, 1:19PM

Steel Column

File = C:\Users\Ron\DOCUME~1\ENERCA~1\TOWNSE~1.EC6
ENERCALC, INC. 1983-2013, Build:6.13.8.31, Ver:6.13.12.31

Lic. # : KW-06009396 **Licensee : Bell Engineering**

Description : PIER #3 COLUMN

Steel Section Properties : W12x58

Depth	=	12.200	in	I xx	=	475.00	in^4	J	=	2.100	in^4
Web Thick	=	0.360	in	S xx	=	78.00	in^3	Cw	=	3,570.00	in^6
Flange Width	=	10.000	in	R xx	=	5.280	in				
Flange Thick	=	0.640	in	Zx	=	86.400	in^3				
Area	=	17.000	in^2	I yy	=	107.000	in^4				
Weight	=	57.868	plf	S yy	=	21.400	in^3	Wno	=	28.900	in^2
Kdesign	=	1.240	in	R yy	=	2.510	in	Sw	=	46.200	in^4
K1	=	0.938	in	Zy	=	32.500	in^3	Qf	=	17.800	in^3
rts	=	2.820	in	rT	=	2.720	in	Qw	=	42.400	in^3
Ycg	=	0.000	in								

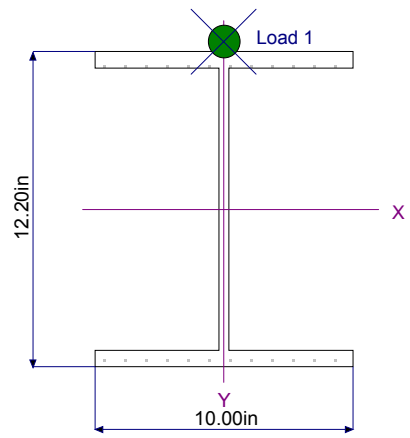

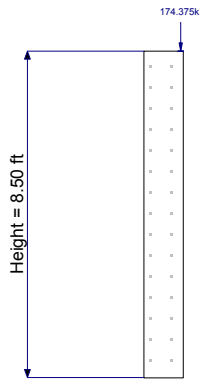

Loads are total entered value. Arrows do not reflect absolute direction.

BELL ENGINEERING
CIVIL & ENVIRONMENTAL
17 ECHO COVE WAY-SPOFFORD, NH 03462
(603) 363-9966

Project Title: TOWNSHEND DAM COVERED BRIDGE
Engineer: RON BELL
Project ID: 2015-055
Project Descr: STP SCTT (1)

Printed: 13 NOV 2015, 1:20PM

Steel Column

File = C:\Users\Ron\DOCUME~1\ENERCA~1\TOWNSE~1.EC6
ENERCALC, INC. 1983-2013, Build:6.13.8.31, Ver:6.13.12.31

Lic. # : KW-06009396 **Licensee : Bell Engineering**

Description : ABUTMENT 2 COLUMN

Code References

Calculations per AISC 360-05, IBC 2006, CBC 2007, ASCE 7-05
Load Combinations Used : ASCE 7-05

General Information

Steel Section Name : **W8x31**
Analysis Method : Load Resistance Factor
Steel Stress Grade : A-992, High Strength, Low Alloy, Fy = 5
Fy : Steel Yield : 50.0 ksi
E : Elastic Bending Modulus : 29,000.0 ksi
Load Combination : ASCE 7-05

Overall Column Height : 5.50 ft
Top & Bottom Fixity : Top Free, Bottom Fixed
Brace condition for deflection (buckling) along columns :
X-X (width) axis :
Unbraced Length for X-X Axis buckling = 5.50 ft, K = 1.0
Y-Y (depth) axis :
Unbraced Length for Y-Y Axis buckling = 5.50 ft, K = 1.0

Applied Loads

Service loads entered. Load Factors will be applied for calculations.

Column self weight included : 170.745 lbs * Dead Load Factor
AXIAL LOADS . . .
Axial Load at 5.50 ft, D = 17.838, L = 9.709, S = 10.457 k

DESIGN SUMMARY

Bending & Shear Check Results

PASS Max. Axial+Bending Stress Ratio = **0.1138** : 1
Load Combination +1.20D+0.50L+1.60S
Location of max.above base 0.0 ft
At maximum location values are . . .
Pu 43.196 k
0.9 * Pn 379.584 k
Mu-x 0.0 k-ft
0.9 * Mn-x : 113.877 k-ft
Mu-y 0.0 k-ft
0.9 * Mn-y : 52.791 k-ft

PASS Maximum Shear Stress Ratio = **0.0** : 1
Load Combination
Location of max.above base 0.0 ft
At maximum location values are . . .
Vu : Applied 0.0 k
Vn * Phi : Allowable 0.0 k

Maximum SERVICE Load Reactions . .
Top along X-X 0.0 k
Bottom along X-X 0.0 k
Top along Y-Y 0.0 k
Bottom along Y-Y 0.0 k

Maximum SERVICE Load Deflections . . .
Along Y-Y 0.0 in at 0.0 ft above base
for load combination :
Along X-X 0.0 in at 0.0 ft above base
for load combination :

Maximum Deflections for Load Combinations - Unfactored Loads

Load Combination	Max. X-X Deflection		Distance		Max. Y-Y Deflection		Distance	
D Only	0.0000	in	0.000	ft	0.000	in	0.000	ft
L Only	0.0000	in	0.000	ft	0.000	in	0.000	ft
S Only	0.0000	in	0.000	ft	0.000	in	0.000	ft
D+L	0.0000	in	0.000	ft	0.000	in	0.000	ft
D+S	0.0000	in	0.000	ft	0.000	in	0.000	ft
D+L+S	0.0000	in	0.000	ft	0.000	in	0.000	ft

Steel Section Properties : W8x31

BELL ENGINEERING
CIVIL & ENVIRONMENTAL
17 ECHO COVE WAY-SPOFFORD, NH 03462
(603) 363-9966

Project Title: TOWNSHEND DAM COVERED BRIDGE
Engineer: RON BELL
Project ID: 2015-055
Project Descr: STP SCTT (1)

Printed: 13 NOV 2015, 1:20PM

Steel Column

File = C:\Users\Ron\DOCUME~1\ENERCA~1\TOWNSE~1.EC6
ENERCALC, INC. 1983-2013, Build:6.13.8.31, Ver:6.13.12.31

Lic. # : KW-06009396 **Licensee : Bell Engineering**

Description : ABUTMENT 2 COLUMN

Steel Section Properties : W8x31

Depth	=	8.000	in	I xx	=	110.00	in^4	J	=	0.536	in^4
Web Thick	=	0.285	in	S xx	=	27.50	in^3	Cw	=	530.00	in^6
Flange Width	=	8.000	in	R xx	=	3.470	in				
Flange Thick	=	0.435	in	Zx	=	30.400	in^3				
Area	=	9.120	in^2	I yy	=	37.100	in^4				
Weight	=	31.044	plf	S yy	=	9.270	in^3	Wno	=	15.100	in^2
Kdesign	=	0.829	in	R yy	=	2.020	in	Sw	=	13.200	in^4
K1	=	0.750	in	Zy	=	14.100	in^3	Qf	=	6.350	in^3
rts	=	2.260	in	rT	=	2.180	in	Qw	=	15.000	in^3
Ycg	=	0.000	in								

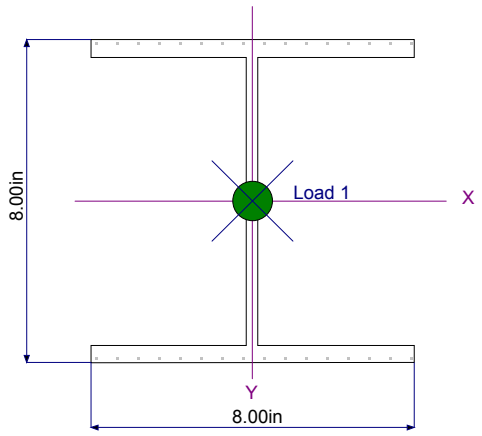

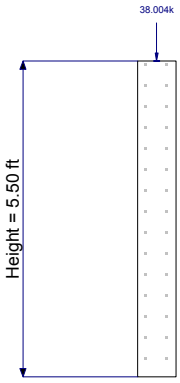

Loads are total entered value. Arrows do not reflect absolute direction.

BELL ENGINEERING
CIVIL & ENVIRONMENTAL
17 ECHO COVE WAY-SPOFFORD, NH 03462
(603) 363-9966

Project Title: TOWNSHEND DAM COVERED BRIDGE
Engineer: RON BELL
Project ID: 2015-055
Project Descr: STP SCTT (1)

Printed: 13 NOV 2015, 1:05PM

Steel Base Plate

File = C:\Users\Ron\DOCUME~1\ENERCA~1\TOWNSE~1.EC6
ENERCALC, INC. 1983-2013, Build:6.13.8.31, Ver:6.13.12.31

Lic. # : KW-06009396 **Licensee : Bell Engineering**

Description : W8X31 BASE PLATES Pier #3 and ABT # 2

Code References

Calculations per AISC 360-05 & Design Guide # 1, IBC 2006, CBC 2007, ASCE 7-05
Load Combination Set : ASCE 7-05

General Information

Material Properties

AISC Design Method	Load Resistance Factor Design	Φ c : LRFD Resistance Factor	0.60
Steel Plate Fy	= 50.0 ksi		
Concrete Support f'c	= 3.0 ksi		
Assumed Bearing Area :	Full Bearing	Allowable Bearing Fp per J8	5.10 ksi

Column & Plate

Column Properties

Steel Section : W8x31

Depth	8 in	Area	9.12 in^2
Width	8 in	Ixx	in^4
Flange Thickness	0.435 in	Iyy	in^4
Web Thickness	0.285 in		

Plate Dimensions

N : Length	14.0 in
B : Width	14.0 in
Thickness	0.750 in

Column assumed welded to base plate.

Support Dimensions

Width along "X"	30.0 in
Length along "Z'	48.0 in

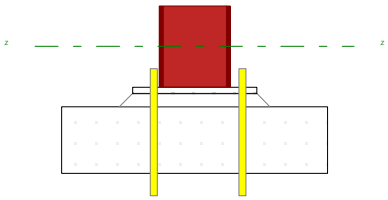

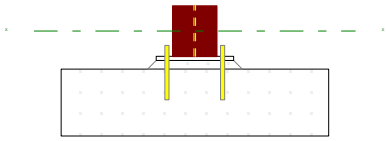

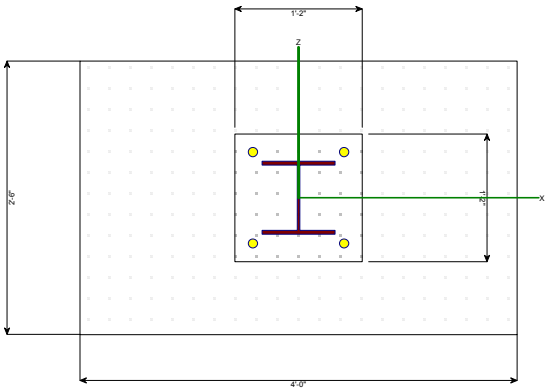

Applied Loads

	P-Y	V-Z	M-X
D : Dead Load	18.540 k	k	k-ft
L : Live	10.390 k	k	k-ft
Lr : Roof Live	k	k	k-ft
S : Snow	11.10 k	k	k-ft
W : Wind	k	6.070 k	k-ft
E : Earthquake	k	k	k-ft
H : Lateral Earth	k	k	k-ft

" P " = Gravity load, "+" sign is downward.

"+" Moments create higher soil pressure at +Z edge.
"+" Shears push plate towards +Z edge.

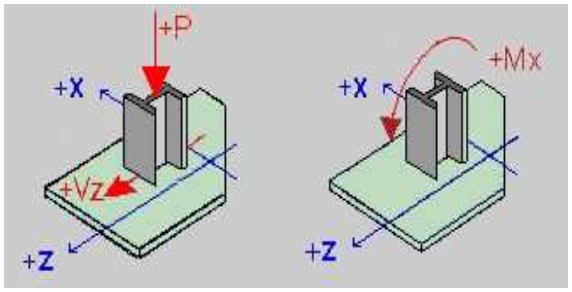

Anchor Bolts

Anchor Bolt or Rod Description	3/4
Max of Tension or Pullout Capacity.....	10.0 k
Shear Capacity.....	20.0 k
Edge distance : bolt to plate.....	2.0 in
Number of Bolts in each Row.....	2.0
Number of Bolt Rows.....	1.0

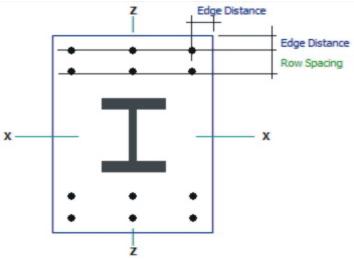

BELL ENGINEERING
CIVIL & ENVIRONMENTAL
17 ECHO COVE WAY-SPOFFORD, NH 03462
(603) 363-9966

Project Title: TOWNSHEND DAM COVERED BRIDGE
Engineer: RON BELL
Project ID: 2015-055
Project Descr: STP SCTT (1)

Printed: 13 NOV 2015, 1:05PM

Steel Base Plate

File = C:\Users\Ron\DOCUME~1\ENERCA~1\TOWNSE~1.EC6
ENERCALC, INC. 1983-2013, Build:6.13.8.31, Ver:6.13.12.31

Lic. # : KW-06009396 **Licensee : Bell Engineering**

Description : W8X31 BASE PLATES Pier #3 and ABT # 2

GOVERNING DESIGN LOAD CASE SUMMARY

Plate Design Summary

Design Method	Load Resistance Factor Design
Governing Load Combination	+1.20D+1.60L+0.50S+1.60H
Governing Load Case Type	Axial Load Only
Design Plate Size	**1'-2" x 1'-2" x 0 -3/4"**
Pu : Axial	44.422 k
Mu : Moment	0.000 k-ft

Mu : Max. Moment	1.636 k-in
fb : Max. Bending Stress	11.636 ksi
Fb : Allowable : Fy * Phi	45.000 ksi
Bending Stress Ratio	0.259

Bending Stress OK

fu : Max. Plate Bearing Stress	0.227 ksi
Fp : Allowable : min(0.85*f'c*sqrt(A2/A1), 1.7* f'c)*Phi	3.060 ksi
Bearing Stress Ratio	0.074

Bearing Stress OK

Load Comb. : +1.40D

Axial Load Only, No Moment

Loading

Pu : Axial	25.956	k
Design Plate Height	14.000	in
Design Plate Width	14.000	in
Will be different from entry if partial bearing used.		
A1 : Plate Area	196.000	in^2
A2: Support Area	900.000	in^2
sqrt(A2/A1)	2.000	

Distance for Moment Calculation

" m "	3.200	in
" n "	3.800	in
X	0.043	in^2
Lambda	0.210	
n'	2.000	in
n' * Lambda	0.421	in
L = max(m, n, n")	3.800	in

Bearing Stresses

Fp : Allowable	3.060 ksi
fu : Max. Bearing Pressure	0.132 ksi
Stress Ratio	**0.043**

Plate Bending Stresses

Mmax = Fu * L^2 / 2	0.956 k-in
fb : Actual	6.799 ksi
Fb : Allowable	45.000 ksi
Stress Ratio	**0.151**

Load Comb. : +1.20D+0.50Lr+1.60L+1.60H

Axial Load Only, No Moment

Loading

Pu : Axial	38.872	k
Design Plate Height	14.000	in
Design Plate Width	14.000	in
Will be different from entry if partial bearing used.		
A1 : Plate Area	196.000	in^2
A2: Support Area	900.000	in^2
sqrt(A2/A1)	2.000	

Distance for Moment Calculation

" m "	3.200	in
" n "	3.800	in
X	0.065	in^2
Lambda	0.259	
n'	2.000	in
n' * Lambda	0.518	in
L = max(m, n, n")	3.800	in

Bearing Stresses

Fp : Allowable	3.060 ksi
fu : Max. Bearing Pressure	0.198 ksi
Stress Ratio	**0.065**

Plate Bending Stresses

Mmax = Fu * L^2 / 2	1.432 k-in
fb : Actual	10.183 ksi
Fb : Allowable	45.000 ksi
Stress Ratio	**0.226**

BELL ENGINEERING
CIVIL & ENVIRONMENTAL
17 ECHO COVE WAY-SPOFFORD, NH 03462
(603) 363-9966

Project Title: TOWNSHEND DAM COVERED BRIDGE
Engineer: RON BELL
Project ID: 2015-055
Project Descr: STP SCTT (1)

Printed: 13 NOV 2015, 1:05PM

Steel Base Plate

File = C:\Users\Ron\DOCUME~1\ENERCA~1\TOWNSE~1.EC6
ENERCALC, INC. 1983-2013, Build:6.13.8.31, Ver:6.13.12.31

Lic. # : KW-06009396 **Licensee : Bell Engineering**

Description : W8X31 BASE PLATES Pier #3 and ABT # 2

Load Comb. : +1.20D+1.60L+0.50S+1.60H

Axial Load Only, No Moment

Loading

Pu : Axial	44.422	k
Design Plate Height	14.000	in
Design Plate Width	14.000	in
Will be different from entry if partial bearing used.		
A1 : Plate Area	196.000	in^2
A2: Support Area	900.000	in^2
sqrt(A2/A1)	2.000	

Distance for Moment Calculation

" m "	3.200	in
" n "	3.800	in
X	0.074	in^2
Lambda	0.277	
n'	2.000	in
n' * Lambda	0.555	in
L = max(m, n, n")	3.800	in

Bearing Stresses

Fp : Allowable	3.060	ksi
fu : Max. Bearing Pressure	0.227	ksi
Stress Ratio	**0.074**	

Plate Bending Stresses

Mmax = Fu * L^2 / 2	1.636	k-in
fb : Actual	11.636	ksi
Fb : Allowable	45.000	ksi
Stress Ratio	**0.259**	

Load Comb. : +1.20D+1.60Lr+0.80W

Axial Load Only, No Moment

Loading

Pu : Axial	22.248	k
Design Plate Height	14.000	in
Design Plate Width	14.000	in
Will be different from entry if partial bearing used.		
A1 : Plate Area	196.000	in^2
A2: Support Area	900.000	in^2
sqrt(A2/A1)	2.000	

Distance for Moment Calculation

" m "	3.200	in
" n "	3.800	in
X	0.037	in^2
Lambda	0.194	
n'	2.000	in
n' * Lambda	0.389	in
L = max(m, n, n")	3.800	in

Bearing Stresses

Fp : Allowable	3.060	ksi
fu : Max. Bearing Pressure	0.114	ksi
Stress Ratio	**0.037**	

Plate Bending Stresses

Mmax = Fu * L^2 / 2	0.820	k-in
fb : Actual	5.828	ksi
Fb : Allowable	45.000	ksi
Stress Ratio	**0.130**	

Load Comb. : +1.20D+1.60Lr-0.80W

Axial Load Only, No Moment

Loading

Pu : Axial	22.248	k
Design Plate Height	14.000	in
Design Plate Width	14.000	in
Will be different from entry if partial bearing used.		
A1 : Plate Area	196.000	in^2
A2: Support Area	900.000	in^2
sqrt(A2/A1)	2.000	

Distance for Moment Calculation

" m "	3.200	in
" n "	3.800	in
X	0.037	in^2
Lambda	0.194	
n'	2.000	in
n' * Lambda	0.389	in
L = max(m, n, n")	3.800	in

Bearing Stresses

Fp : Allowable	3.060	ksi
fu : Max. Bearing Pressure	0.114	ksi
Stress Ratio	**0.037**	

Plate Bending Stresses

Mmax = Fu * L^2 / 2	0.820	k-in
fb : Actual	5.828	ksi
Fb : Allowable	45.000	ksi
Stress Ratio	**0.130**	

BELL ENGINEERING
CIVIL & ENVIRONMENTAL
17 ECHO COVE WAY-SPOFFORD, NH 03462
(603) 363-9966

Project Title: TOWNSHEND DAM COVERED BRIDGE
Engineer: RON BELL
Project Descr: STP SCTT (1)
Project ID: 2015-055

Printed: 13 NOV 2015, 1:05PM

Steel Base Plate

File = C:\Users\Ron\DOCUME~1\ENERCA~1\TOWNSE~1.EC6
ENERCALC, INC. 1983-2013, Build:6.13.8.31, Ver:6.13.12.31

Lic. # : KW-06009396 **Licensee : Bell Engineering**

Description : W8X31 BASE PLATES Pier #3 and ABT # 2

Load Comb. : +1.20D+0.50Lr+0.50L+1.60W

Axial Load Only, No Moment

Loading

Pu : Axial	27.443	k
Design Plate Height	14.000	in
Design Plate Width	14.000	in
Will be different from entry if partial bearing used.		
A1 : Plate Area	196.000	in^2
A2: Support Area	900.000	in^2
sqrt(A2/A1)	2.000	

Distance for Moment Calculation

" m "	3.200	in
" n "	3.800	in
X	0.046	in^2
Lambda	0.216	
n'	2.000	in
n' * Lambda	0.433	in
L = max(m, n, n")	3.800	in

Bearing Stresses

Fp : Allowable	3.060 ksi
fu : Max. Bearing Pressure	0.140 ksi
Stress Ratio	**0.046**

Plate Bending Stresses

Mmax = Fu * L^2 / 2	1.011 k-in
fb : Actual	7.189 ksi
Fb : Allowable	45.000 ksi
Stress Ratio	**0.160**

Load Comb. : +1.20D+0.50Lr+0.50L-1.60W

Axial Load Only, No Moment

Loading

Pu : Axial	27.443	k
Design Plate Height	14.000	in
Design Plate Width	14.000	in
Will be different from entry if partial bearing used.		
A1 : Plate Area	196.000	in^2
A2: Support Area	900.000	in^2
sqrt(A2/A1)	2.000	

Distance for Moment Calculation

" m "	3.200	in
" n "	3.800	in
X	0.046	in^2
Lambda	0.216	
n'	2.000	in
n' * Lambda	0.433	in
L = max(m, n, n")	3.800	in

Bearing Stresses

Fp : Allowable	3.060 ksi
fu : Max. Bearing Pressure	0.140 ksi
Stress Ratio	**0.046**

Plate Bending Stresses

Mmax = Fu * L^2 / 2	1.011 k-in
fb : Actual	7.189 ksi
Fb : Allowable	45.000 ksi
Stress Ratio	**0.160**

Load Comb. : +1.20D+0.50L+0.50S+1.60W

Axial Load Only, No Moment

Loading

Pu : Axial	32.993	k
Design Plate Height	14.000	in
Design Plate Width	14.000	in
Will be different from entry if partial bearing used.		
A1 : Plate Area	196.000	in^2
A2: Support Area	900.000	in^2
sqrt(A2/A1)	2.000	

Distance for Moment Calculation

" m "	3.200	in
" n "	3.800	in
X	0.055	in^2
Lambda	0.238	
n'	2.000	in
n' * Lambda	0.476	in
L = max(m, n, n")	3.800	in

Bearing Stresses

Fp : Allowable	3.060 ksi
fu : Max. Bearing Pressure	0.168 ksi
Stress Ratio	**0.055**

Plate Bending Stresses

Mmax = Fu * L^2 / 2	1.215 k-in
fb : Actual	8.643 ksi
Fb : Allowable	45.000 ksi
Stress Ratio	**0.192**

BELL ENGINEERING
CIVIL & ENVIRONMENTAL
17 ECHO COVE WAY-SPOFFORD, NH 03462
(603) 363-9966

Project Title: TOWNSHEND DAM COVERED BRIDGE
Engineer: RON BELL
Project ID: 2015-055
Project Descr: STP SCTT (1)

Printed: 13 NOV 2015, 1:05PM

Steel Base Plate

File = C:\Users\Ron\DOCUME~1\ENERCA~1\TOWNSE~1.EC6
ENERCALC, INC. 1983-2013, Build:6.13.8.31, Ver:6.13.12.31

Lic. # : KW-06009396 **Licensee : Bell Engineering**

Description : W8X31 BASE PLATES Pier #3 and ABT # 2

Load Comb. : +1.20D+0.50L+0.50S-1.60W

Axial Load Only, No Moment

Loading

Pu : Axial	32.993	k
Design Plate Height	14.000	in
Design Plate Width	14.000	in
Will be different from entry if partial bearing used.		
A1 : Plate Area	196.000	in^2
A2: Support Area	900.000	in^2
sqrt(A2/A1)	2.000	

Distance for Moment Calculation

" m "	3.200	in
" n "	3.800	in
X	0.055	in^2
Lambda	0.238	
n'	2.000	in
n' * Lambda	0.476	in
L = max(m, n, n")	3.800	in

Bearing Stresses

Fp : Allowable	3.060 ksi
fu : Max. Bearing Pressure	0.168 ksi
Stress Ratio	**0.055**

Plate Bending Stresses

Mmax = Fu * L^2 / 2	1.215 k-in
fb : Actual	8.643 ksi
Fb : Allowable	45.000 ksi
Stress Ratio	**0.192**

BELL ENGINEERING
CIVIL & ENVIRONMENTAL
17 ECHO COVE WAY-SPOFFORD, NH 03462
(603) 363-9966

Project Title: TOWNSHEND DAM COVERED BRIDGE
Engineer: RON BELL
Project ID: 2015-055
Project Descr: STP SCTT (1)

Printed: 13 NOV 2015, 1:09PM

Steel Base Plate

File = C:\Users\Ron\DOCUME~1\ENERCA~1\TOWNSE~1.EC6
ENERCALC, INC. 1983-2013, Build:6.13.8.31, Ver:6.13.12.31

Lic. # : KW-06009396 **Licensee : Bell Engineering**

Description : BASE PLATE FOR HP53 Pier #2

Code References

Calculations per AISC 360-05 & Design Guide # 1, IBC 2006, CBC 2007, ASCE 7-05
Load Combination Set : ASCE 7-05

General Information

Material Properties

AISC Design Method	Load Resistance Factor Design		Φ c : LRFD Resistance Factor	0.60
Steel Plate Fy	=	50.0 ksi		
Concrete Support f'c	=	3.0 ksi		
Assumed Bearing Area :	Full Bearing		Allowable Bearing Fp per J8	4.250 ksi

Column & Plate

Column Properties

Steel Section : HP12x53

Depth	11.8 in	Area	15.5	in^2
Width	12 in	Ixx		in^4
Flange Thickness	0.435 in	Iyy		in^4
Web Thickness	0.435 in			

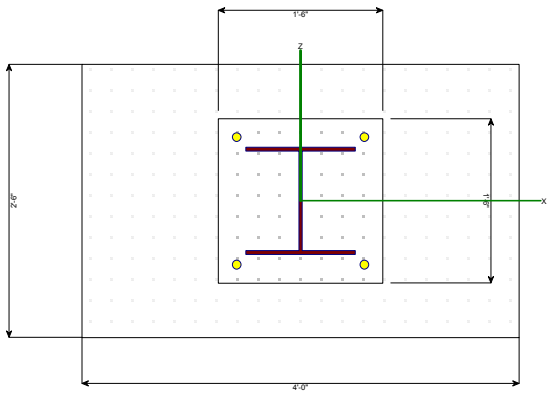

Plate Dimensions

N : Length	18.0	in
B : Width	18.0	in
Thickness	0.750	in

Column assumed welded to base plate.

Support Dimensions

Width along "X"	30.0	in
Length along "Z'	48.0	in

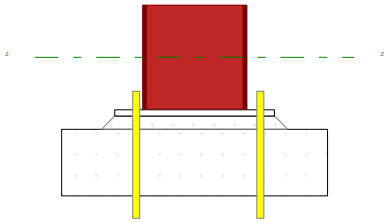

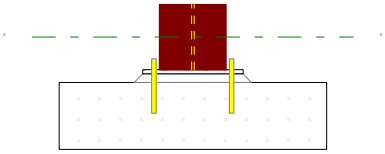

Applied Loads

	P-Y	V-Z	M-X
D : Dead Load	75.750 k	k	k-ft
L : Live	46.399 k	k	k-ft
Lr : Roof Live	k	k	k-ft
S : Snow	52.216 k	k	k-ft
W : Wind	k	12.140 k	k-ft
E : Earthquake	k	k	k-ft
H : Lateral Earth	k	k	k-ft

" P " = Gravity load, "+" sign is downward.
"+" Moments create higher soil pressure at +Z edge.
"+" Shears push plate towards +Z edge.

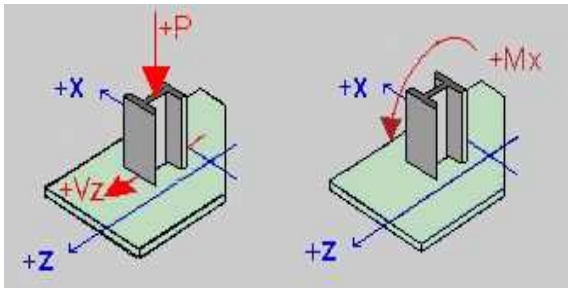

Anchor Bolts

Anchor Bolt or Rod Description	3/4	
Max of Tension or Pullout Capacity.....	10.0	k
Shear Capacity.....	20.0	k
Edge distance : bolt to plate.....	2.0	in
Number of Bolts in each Row.....	2.0	
Number of Bolt Rows.....	1.0	

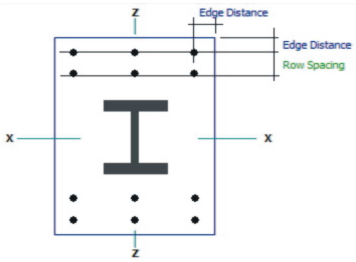

BELL ENGINEERING
CIVIL & ENVIRONMENTAL
17 ECHO COVE WAY-SPOFFORD, NH 03462
(603) 363-9966

Project Title: TOWNSHEND DAM COVERED BRIDGE
Engineer: RON BELL
Project ID: 2015-055
Project Descr: STP SCTT (1)

Printed: 13 NOV 2015, 1:09PM

Steel Base Plate

File = C:\Users\Ron\DOCUME~1\ENERCA~1\TOWNSE~1.EC6
ENERCALC, INC. 1983-2013, Build:6.13.8.31, Ver:6.13.12.31

Lic. # : KW-06009396 **Licensee : Bell Engineering**

Description : BASE PLATE FOR HP53 Pier #2

GOVERNING DESIGN LOAD CASE SUMMARY

Plate Design Summary

Design Method	Load Resistance Factor Design
Governing Load Combination	+1.20D+1.60L+0.50S+1.60H
Governing Load Case Type	Axial Load Only
Design Plate Size	**1'-6" x 1'-6" x 0 -3/4"**
Pu : Axial	191.246 k
Mu : Moment	0.000 k-ft

Mu : Max. Moment	5.206	k-in
fb : Max. Bending Stress	37.022	ksi
Fb : Allowable : Fy * Phi	45.000	ksi
Bending Stress Ratio	0.823	

Bending Stress OK

fu : Max. Plate Bearing Stress	0.590	ksi
Fp : Allowable : min(0.85*f'c*sqrt(A2/A1), 1.7* f'c)*Phi	2.550	ksi
Bearing Stress Ratio	0.231	

Bearing Stress OK

Load Comb. : +1.40D

Axial Load Only, No Moment

Loading

Pu : Axial	106.050	k
Design Plate Height	18.000	in
Design Plate Width	18.000	in
Will be different from entry if partial bearing used.		
A1 : Plate Area	324.000	in^2
A2: Support Area	900.000	in^2
sqrt(A2/A1)	1.667	

Distance for Moment Calculation

" m "	3.395	in
" n "	4.200	in
X	0.128	in^2
Lambda	0.371	
n'	2.975	in
n' * Lambda	1.102	in
L = max(m, n, n")	4.200	in

Bearing Stresses

Fp : Allowable	2.550	ksi
fu : Max. Bearing Pressure	0.327	ksi
Stress Ratio	**0.128**	

Plate Bending Stresses

Mmax = Fu * L^2 / 2	2.887	k-in
fb : Actual	20.529	ksi
Fb : Allowable	45.000	ksi
Stress Ratio	**0.456**	

Load Comb. : +1.20D+0.50Lr+1.60L+1.60H

Axial Load Only, No Moment

Loading

Pu : Axial	165.138	k
Design Plate Height	18.000	in
Design Plate Width	18.000	in
Will be different from entry if partial bearing used.		
A1 : Plate Area	324.000	in^2
A2: Support Area	900.000	in^2
sqrt(A2/A1)	1.667	

Distance for Moment Calculation

" m "	3.395	in
" n "	4.200	in
X	0.200	in^2
Lambda	0.472	
n'	2.975	in
n' * Lambda	1.404	in
L = max(m, n, n")	4.200	in

Bearing Stresses

Fp : Allowable	2.550	ksi
fu : Max. Bearing Pressure	0.510	ksi
Stress Ratio	**0.200**	

Plate Bending Stresses

Mmax = Fu * L^2 / 2	4.495	k-in
fb : Actual	31.968	ksi
Fb : Allowable	45.000	ksi
Stress Ratio	**0.710**	

BELL ENGINEERING
CIVIL & ENVIRONMENTAL
17 ECHO COVE WAY-SPOFFORD, NH 03462
(603) 363-9966

Project Title: TOWNSHEND DAM COVERED BRIDGE
Engineer: RON BELL
Project ID: 2015-055
Project Descr: STP SCTT (1)

Printed: 13 NOV 2015, 1:09PM

Steel Base Plate

File = C:\Users\Ron\DOCUME~1\ENERCA~1\TOWNSE~1.EC6
ENERCALC, INC. 1983-2013, Build:6.13.8.31, Ver:6.13.12.31

Lic. # : KW-06009396 **Licensee : Bell Engineering**

Description : BASE PLATE FOR HP53 Pier #2

Load Comb. : +1.20D+1.60L+0.50S+1.60H

Axial Load Only, No Moment

Loading

Pu : Axial	191.246	k
Design Plate Height	18.000	in
Design Plate Width	18.000	in
Will be different from entry if partial bearing used.		
A1 : Plate Area	324.000	in^2
A2: Support Area	900.000	in^2
sqrt(A2/A1)	1.667	

Distance for Moment Calculation

" m "	3.395	in
" n "	4.200	in
X	0.231	in^2
Lambda	0.513	
n'	2.975	in
n' * Lambda	1.525	in
L = max(m, n, n")	4.200	in

Bearing Stresses

Fp : Allowable	2.550 ksi
fu : Max. Bearing Pressure	0.590 ksi
Stress Ratio	**0.231**

Plate Bending Stresses

Mmax = Fu * L^2 / 2	5.206 k-in
fb : Actual	37.022 ksi
Fb : Allowable	45.000 ksi
Stress Ratio	**0.823**

Load Comb. : +1.20D+1.60Lr+0.80W

Axial Load Only, No Moment

Loading

Pu : Axial	90.900	k
Design Plate Height	18.000	in
Design Plate Width	18.000	in
Will be different from entry if partial bearing used.		
A1 : Plate Area	324.000	in^2
A2: Support Area	900.000	in^2
sqrt(A2/A1)	1.667	

Distance for Moment Calculation

" m "	3.395	in
" n "	4.200	in
X	0.110	in^2
Lambda	0.341	
n'	2.975	in
n' * Lambda	1.015	in
L = max(m, n, n")	4.200	in

Bearing Stresses

Fp : Allowable	2.550 ksi
fu : Max. Bearing Pressure	0.281 ksi
Stress Ratio	**0.110**

Plate Bending Stresses

Mmax = Fu * L^2 / 2	2.475 k-in
fb : Actual	17.596 ksi
Fb : Allowable	45.000 ksi
Stress Ratio	**0.391**

Load Comb. : +1.20D+1.60Lr-0.80W

Axial Load Only, No Moment

Loading

Pu : Axial	90.900	k
Design Plate Height	18.000	in
Design Plate Width	18.000	in
Will be different from entry if partial bearing used.		
A1 : Plate Area	324.000	in^2
A2: Support Area	900.000	in^2
sqrt(A2/A1)	1.667	

Distance for Moment Calculation

" m "	3.395	in
" n "	4.200	in
X	0.110	in^2
Lambda	0.341	
n'	2.975	in
n' * Lambda	1.015	in
L = max(m, n, n")	4.200	in

Bearing Stresses

Fp : Allowable	2.550 ksi
fu : Max. Bearing Pressure	0.281 ksi
Stress Ratio	**0.110**

Plate Bending Stresses

Mmax = Fu * L^2 / 2	2.475 k-in
fb : Actual	17.596 ksi
Fb : Allowable	45.000 ksi
Stress Ratio	**0.391**

BELL ENGINEERING
CIVIL & ENVIRONMENTAL
17 ECHO COVE WAY-SPOFFORD, NH 03462
(603) 363-9966

Project Title: TOWNSHEND DAM COVERED BRIDGE
Engineer: RON BELL
Project ID: 2015-055
Project Descr: STP SCTT (1)

Printed: 13 NOV 2015, 1:09PM

Steel Base Plate

File = C:\Users\Ron\DOCUME~1\ENERCA~1\TOWNSE~1.EC6
ENERCALC, INC. 1983-2013, Build:6.13.8.31, Ver:6.13.12.31

Lic. # : KW-06009396 **Licensee : Bell Engineering**

Description : BASE PLATE FOR HP53 Pier #2

Load Comb. : +1.20D+0.50Lr+0.50L+1.60W

Axial Load Only, No Moment

Loading

Pu : Axial	114.100	k
Design Plate Height	18.000	in
Design Plate Width	18.000	in
Will be different from entry if partial bearing used.		
A1 : Plate Area	324.000	in^2
A2: Support Area	900.000	in^2
sqrt(A2/A1)	1.667	

Distance for Moment Calculation

" m "	3.395	in
" n "	4.200	in
X	0.138	in^2
Lambda	0.385	
n'	2.975	in
n' * Lambda	1.147	in
L = max(m, n, n")	4.200	in

Bearing Stresses

Fp : Allowable	2.550	ksi
fu : Max. Bearing Pressure	0.352	ksi
Stress Ratio	**0.138**	

Plate Bending Stresses

Mmax = Fu * L^2 / 2	3.106	k-in
fb : Actual	22.087	ksi
Fb : Allowable	45.000	ksi
Stress Ratio	**0.491**	

Load Comb. : +1.20D+0.50Lr+0.50L-1.60W

Axial Load Only, No Moment

Loading

Pu : Axial	114.100	k
Design Plate Height	18.000	in
Design Plate Width	18.000	in
Will be different from entry if partial bearing used.		
A1 : Plate Area	324.000	in^2
A2: Support Area	900.000	in^2
sqrt(A2/A1)	1.667	

Distance for Moment Calculation

" m "	3.395	in
" n "	4.200	in
X	0.138	in^2
Lambda	0.385	
n'	2.975	in
n' * Lambda	1.147	in
L = max(m, n, n")	4.200	in

Bearing Stresses

Fp : Allowable	2.550	ksi
fu : Max. Bearing Pressure	0.352	ksi
Stress Ratio	**0.138**	

Plate Bending Stresses

Mmax = Fu * L^2 / 2	3.106	k-in
fb : Actual	22.087	ksi
Fb : Allowable	45.000	ksi
Stress Ratio	**0.491**	

Load Comb. : +1.20D+0.50L+0.50S+1.60W

Axial Load Only, No Moment

Loading

Pu : Axial	140.208	k
Design Plate Height	18.000	in
Design Plate Width	18.000	in
Will be different from entry if partial bearing used.		
A1 : Plate Area	324.000	in^2
A2: Support Area	900.000	in^2
sqrt(A2/A1)	1.667	

Distance for Moment Calculation

" m "	3.395	in
" n "	4.200	in
X	0.170	in^2
Lambda	0.431	
n'	2.975	in
n' * Lambda	1.282	in
L = max(m, n, n")	4.200	in

Bearing Stresses

Fp : Allowable	2.550	ksi
fu : Max. Bearing Pressure	0.433	ksi
Stress Ratio	**0.170**	

Plate Bending Stresses

Mmax = Fu * L^2 / 2	3.817	k-in
fb : Actual	27.141	ksi
Fb : Allowable	45.000	ksi
Stress Ratio	**0.603**	

BELL ENGINEERING
CIVIL & ENVIRONMENTAL
17 ECHO COVE WAY-SPOFFORD, NH 03462
(603) 363-9966

Project Title: TOWNSHEND DAM COVERED BRIDGE
Engineer: RON BELL
Project ID: 2015-055
Project Descr: STP SCTT (1)

Printed: 13 NOV 2015, 1:09PM

Steel Base Plate

File = C:\Users\Ron\DOCUME~1\ENERCA~1\TOWNSE~1.EC6
ENERCALC, INC. 1983-2013, Build:6.13.8.31, Ver:6.13.12.31

Lic. # : KW-06009396 **Licensee : Bell Engineering**

Description : BASE PLATE FOR HP53 Pier #2

Load Comb. : +1.20D+0.50L+0.50S-1.60W

Axial Load Only, No Moment

Loading

Pu : Axial	140.208	k
Design Plate Height	18.000	in
Design Plate Width	18.000	in
Will be different from entry if partial bearing used.		
A1 : Plate Area	324.000	in^2
A2: Support Area	900.000	in^2
sqrt(A2/A1)	1.667	

Distance for Moment Calculation

" m "	3.395	in
" n "	4.200	in
X	0.170	in^2
Lambda	0.431	
n'	2.975	in
n' * Lambda	1.282	in
L = max(m, n, n")	4.200	in

Bearing Stresses

Fp : Allowable	2.550	ksi
fu : Max. Bearing Pressure	0.433	ksi
Stress Ratio	**0.170**	

Plate Bending Stresses

Mmax = Fu * L^2 / 2	3.817	k-in
fb : Actual	27.141	ksi
Fb : Allowable	45.000	ksi
Stress Ratio	**0.603**	

BELL ENGINEERING
CIVIL & ENVIRONMENTAL
17 ECHO COVE WAY-SPOFFORD, NH 03462
(603) 363-9966

Project Title: TOWNSHEND DAM COVERED BRIDGE
Engineer: RON BELL
Project ID: 2015-055
Project Descr: STP SCTT (1)

Printed: 13 NOV 2015, 1:09PM

Steel Base Plate

File = C:\Users\Ron\DOCUME~1\ENERCA~1\TOWNSE~1.EC6
ENERCALC, INC. 1983-2013, Build:6.13.8.31, Ver:6.13.12.31

Lic. # : KW-06009396 Licensee : Bell Engineering

Description : BASE PLATE FOR HP53 ACCOUNTING FOR WIND OVERTURNING Pier #2

Code References

Calculations per AISC 360-05 & Design Guide # 1, IBC 2006, CBC 2007, ASCE 7-05
Load Combination Set : ASCE 7-05

General Information

Material Properties

AISC Design Method Load Resistance Factor Design
Steel Plate Fy = 50.0 ksi
Concrete Support f'c = 3.0 ksi
Assumed Bearing Area : Full Bearing

Φ_c : LRFD Resistance Factor 0.60

Allowable Bearing Fp per J8 4.250 ksi

Column & Plate

Column Properties

Steel Section : HP12x53

Depth	11.8 in	Area	15.5 in^2
Width	12 in	Ixx	in^4
Flange Thickness	0.435 in	Iyy	in^4
Web Thickness	0.435 in		

Plate Dimensions

N : Length	18.0 in
B : Width	18.0 in
Thickness	0.750 in

Column assumed welded to base plate.

Support Dimensions

Width along "X"	30.0 in
Length along "Z'	48.0 in

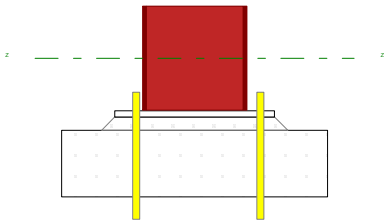

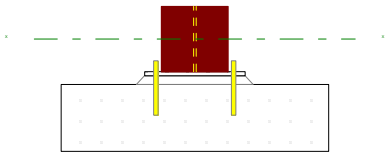

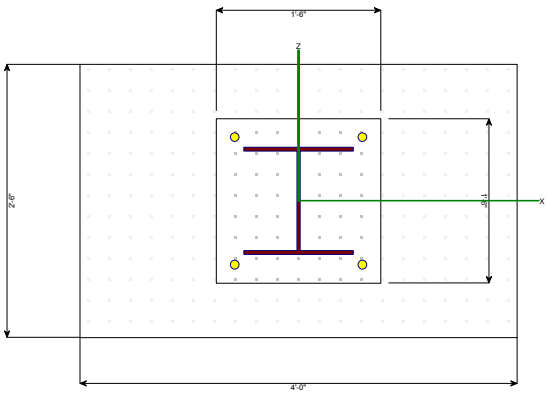

Applied Loads

	P-Y	V-Z	M-X
D : Dead Load	97.120 k	k	k-ft
L : Live	k	k	k-ft
Lr : Roof Live	k	k	k-ft
S : Snow	k	k	k-ft
W : Wind	k	12.140 k	k-ft
E : Earthquake	k	k	k-ft
H : Lateral Earth	k	k	k-ft

" P " = Gravity load, "+" sign is downward.
"+" Moments create higher soil pressure at +Z edge.
"+" Shears push plate towards +Z edge.

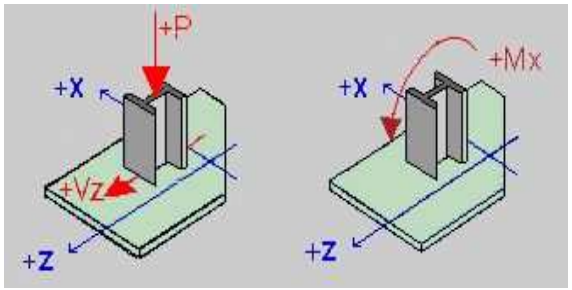

Anchor Bolts

Anchor Bolt or Rod Description	3/4
Max of Tension or Pullout Capacity.....	10.0 k
Shear Capacity.....	20.0 k
Edge distance : bolt to plate.....	2.0 in
Number of Bolts in each Row.....	2.0
Number of Bolt Rows.....	1.0

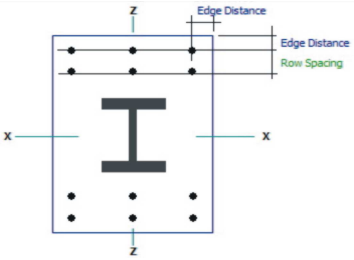

BELL ENGINEERING
CIVIL & ENVIRONMENTAL
17 ECHO COVE WAY-SPOFFORD, NH 03462
(603) 363-9966

Project Title: TOWNSHEND DAM COVERED BRIDGE
Engineer: RON BELL
Project ID: 2015-055
Project Descr: STP SCTT (1)

Printed: 13 NOV 2015, 1:09PM

Steel Base Plate

File = C:\Users\Ron\DOCUME~1\ENERCA~1\TOWNSE~1.EC6
ENERCALC, INC. 1983-2013, Build:6.13.8.31, Ver:6.13.12.31

Lic. # : KW-06009396 **Licensee : Bell Engineering**

Description : BASE PLATE FOR HP53 ACCOUNTING FOR WIND OVERTURNING Pier #2

GOVERNING DESIGN LOAD CASE SUMMARY

Plate Design Summary

Design Method	Load Resistance Factor Design
Governing Load Combination	+1.40D
Governing Load Case Type	Axial Load Only
Design Plate Size	**1'-6" x 1'-6" x 0 -3/4"**
Pu : Axial	135.968 k
Mu : Moment	0.000 k-ft

Mu : Max. Moment	3.701 k-in
fb : Max. Bending Stress	26.321 ksi
Fb : Allowable : Fy * Phi	45.000 ksi
Bending Stress Ratio	0.585

Bending Stress OK

fu : Max. Plate Bearing Stress	0.420 ksi
Fp : Allowable : min(0.85*f'c*sqrt(A2/A1), 1.7* f'c)*Phi	2.550 ksi
Bearing Stress Ratio	0.165

Bearing Stress OK

Load Comb. : +1.40D

Axial Load Only, No Moment

Loading

Pu : Axial	135.968	k
Design Plate Height	18.000	in
Design Plate Width	18.000	in
Will be different from entry if partial bearing used.		
A1 : Plate Area	324.000	in^2
A2: Support Area	900.000	in^2
sqrt(A2/A1)	1.667	

Distance for Moment Calculation

" m "	3.395	in
" n "	4.200	in
X	0.165	in^2
Lambda	0.424	
n'	2.975	in
n' * Lambda	1.261	in
L = max(m, n, n")	4.200	in

Bearing Stresses

Fp : Allowable	2.550	ksi
fu : Max. Bearing Pressure	0.420	ksi
Stress Ratio	**0.165**	

Plate Bending Stresses

Mmax = Fu * L^2 / 2	3.701	k-in
fb : Actual	26.321	ksi
Fb : Allowable	45.000	ksi
Stress Ratio	**0.585**	

Load Comb. : +1.20D+0.50Lr+1.60L+1.60H

Axial Load Only, No Moment

Loading

Pu : Axial	116.544	k
Design Plate Height	18.000	in
Design Plate Width	18.000	in
Will be different from entry if partial bearing used.		
A1 : Plate Area	324.000	in^2
A2: Support Area	900.000	in^2
sqrt(A2/A1)	1.667	

Distance for Moment Calculation

" m "	3.395	in
" n "	4.200	in
X	0.141	in^2
Lambda	0.390	
n'	2.975	in
n' * Lambda	1.160	in
L = max(m, n, n")	4.200	in

Bearing Stresses

Fp : Allowable	2.550	ksi
fu : Max. Bearing Pressure	0.360	ksi
Stress Ratio	**0.141**	

Plate Bending Stresses

Mmax = Fu * L^2 / 2	3.173	k-in
fb : Actual	22.561	ksi
Fb : Allowable	45.000	ksi
Stress Ratio	**0.501**	

BELL ENGINEERING
CIVIL & ENVIRONMENTAL
17 ECHO COVE WAY-SPOFFORD, NH 03462
(603) 363-9966

Project Title: TOWNSHEND DAM COVERED BRIDGE
Engineer: RON BELL
Project ID: 2015-055
Project Descr: STP SCTT (1)

Printed: 13 NOV 2015, 1:09PM

Steel Base Plate

File = C:\Users\Ron\DOCUME~1\ENERCA~1\TOWNSE~1.EC6
ENERCALC, INC. 1983-2013, Build:6.13.8.31, Ver:6.13.12.31

Lic. # : KW-06009396 **Licensee : Bell Engineering**

Description : BASE PLATE FOR HP53 ACCOUNTING FOR WIND OVERTURNING Pier #2

Load Comb. : +1.20D+1.60L+0.50S+1.60H

Axial Load Only, No Moment

Loading

Pu : Axial	116.544	k
Design Plate Height	18.000	in
Design Plate Width	18.000	in
Will be different from entry if partial bearing used.		
A1 : Plate Area	324.000	in^2
A2: Support Area	900.000	in^2
sqrt(A2/A1)	1.667	

Distance for Moment Calculation

" m "	3.395	in
" n "	4.200	in
X	0.141	in^2
Lambda	0.390	
n'	2.975	in
n' * Lambda	1.160	in
L = max(m, n, n")	4.200	in

Bearing Stresses

Fp : Allowable	2.550	ksi
fu : Max. Bearing Pressure	0.360	ksi
Stress Ratio	**0.141**	

Plate Bending Stresses

Mmax = Fu * L^2 / 2	3.173	k-in
fb : Actual	22.561	ksi
Fb : Allowable	45.000	ksi
Stress Ratio	**0.501**	

Load Comb. : +1.20D+1.60Lr+0.80W

Axial Load Only, No Moment

Loading

Pu : Axial	116.544	k
Design Plate Height	18.000	in
Design Plate Width	18.000	in
Will be different from entry if partial bearing used.		
A1 : Plate Area	324.000	in^2
A2: Support Area	900.000	in^2
sqrt(A2/A1)	1.667	

Distance for Moment Calculation

" m "	3.395	in
" n "	4.200	in
X	0.141	in^2
Lambda	0.390	
n'	2.975	in
n' * Lambda	1.160	in
L = max(m, n, n")	4.200	in

Bearing Stresses

Fp : Allowable	2.550	ksi
fu : Max. Bearing Pressure	0.360	ksi
Stress Ratio	**0.141**	

Plate Bending Stresses

Mmax = Fu * L^2 / 2	3.173	k-in
fb : Actual	22.561	ksi
Fb : Allowable	45.000	ksi
Stress Ratio	**0.501**	

Load Comb. : +1.20D+1.60Lr-0.80W

Axial Load Only, No Moment

Loading

Pu : Axial	116.544	k
Design Plate Height	18.000	in
Design Plate Width	18.000	in
Will be different from entry if partial bearing used.		
A1 : Plate Area	324.000	in^2
A2: Support Area	900.000	in^2
sqrt(A2/A1)	1.667	

Distance for Moment Calculation

" m "	3.395	in
" n "	4.200	in
X	0.141	in^2
Lambda	0.390	
n'	2.975	in
n' * Lambda	1.160	in
L = max(m, n, n")	4.200	in

Bearing Stresses

Fp : Allowable	2.550	ksi
fu : Max. Bearing Pressure	0.360	ksi
Stress Ratio	**0.141**	

Plate Bending Stresses

Mmax = Fu * L^2 / 2	3.173	k-in
fb : Actual	22.561	ksi
Fb : Allowable	45.000	ksi
Stress Ratio	**0.501**	

BELL ENGINEERING
CIVIL & ENVIRONMENTAL
17 ECHO COVE WAY-SPOFFORD, NH 03462
(603) 363-9966

Project Title: TOWNSHEND DAM COVERED BRIDGE
Engineer: RON BELL
Project ID: 2015-055
Project Descr: STP SCTT (1)

Printed: 13 NOV 2015, 1:09PM

Steel Base Plate

File = C:\Users\Ron\DOCUME~1\ENERCA~1\TOWNSE~1.EC6
ENERCALC, INC. 1983-2013, Build:6.13.8.31, Ver:6.13.12.31

Lic. # : KW-06009396 **Licensee : Bell Engineering**

Description : BASE PLATE FOR HP53 ACCOUNTING FOR WIND OVERTURNING Pier #2

Load Comb. : +1.20D+0.50Lr+0.50L+1.60W

Axial Load Only, No Moment

Loading

Pu : Axial	116.544	k
Design Plate Height	18.000	in
Design Plate Width	18.000	in
Will be different from entry if partial bearing used.		
A1 : Plate Area	324.000	in^2
A2: Support Area	900.000	in^2
sqrt(A2/A1)	1.667	

Distance for Moment Calculation

" m "	3.395	in
" n "	4.200	in
X	0.141	in^2
Lambda	0.390	
n'	2.975	in
n' * Lambda	1.160	in
L = max(m, n, n")	4.200	in

Bearing Stresses

Fp : Allowable	2.550	ksi
fu : Max. Bearing Pressure	0.360	ksi
Stress Ratio	**0.141**	

Plate Bending Stresses

Mmax = Fu * L^2 / 2	3.173	k-in
fb : Actual	22.561	ksi
Fb : Allowable	45.000	ksi
Stress Ratio	**0.501**	

Load Comb. : +1.20D+0.50Lr+0.50L-1.60W

Axial Load Only, No Moment

Loading

Pu : Axial	116.544	k
Design Plate Height	18.000	in
Design Plate Width	18.000	in
Will be different from entry if partial bearing used.		
A1 : Plate Area	324.000	in^2
A2: Support Area	900.000	in^2
sqrt(A2/A1)	1.667	

Distance for Moment Calculation

" m "	3.395	in
" n "	4.200	in
X	0.141	in^2
Lambda	0.390	
n'	2.975	in
n' * Lambda	1.160	in
L = max(m, n, n")	4.200	in

Bearing Stresses

Fp : Allowable	2.550	ksi
fu : Max. Bearing Pressure	0.360	ksi
Stress Ratio	**0.141**	

Plate Bending Stresses

Mmax = Fu * L^2 / 2	3.173	k-in
fb : Actual	22.561	ksi
Fb : Allowable	45.000	ksi
Stress Ratio	**0.501**	

Load Comb. : +1.20D+0.50L+0.50S+1.60W

Axial Load Only, No Moment

Loading

Pu : Axial	116.544	k
Design Plate Height	18.000	in
Design Plate Width	18.000	in
Will be different from entry if partial bearing used.		
A1 : Plate Area	324.000	in^2
A2: Support Area	900.000	in^2
sqrt(A2/A1)	1.667	

Distance for Moment Calculation

" m "	3.395	in
" n "	4.200	in
X	0.141	in^2
Lambda	0.390	
n'	2.975	in
n' * Lambda	1.160	in
L = max(m, n, n")	4.200	in

Bearing Stresses

Fp : Allowable	2.550	ksi
fu : Max. Bearing Pressure	0.360	ksi
Stress Ratio	**0.141**	

Plate Bending Stresses

Mmax = Fu * L^2 / 2	3.173	k-in
fb : Actual	22.561	ksi
Fb : Allowable	45.000	ksi
Stress Ratio	**0.501**	

BELL ENGINEERING
CIVIL & ENVIRONMENTAL
17 ECHO COVE WAY-SPOFFORD, NH 03462
(603) 363-9966

Project Title: TOWNSHEND DAM COVERED BRIDGE
Engineer: RON BELL
Project ID: 2015-055
Project Descr: STP SCTT (1)

Printed: 13 NOV 2015, 1:09PM

Steel Base Plate

File = C:\Users\Ron\DOCUME~1\ENERCA~1\TOWNSE~1.EC6
ENERCALC, INC. 1983-2013, Build:6.13.8.31, Ver:6.13.12.31

Lic. # : KW-06009396 **Licensee : Bell Engineering**

Description : BASE PLATE FOR HP53 ACCOUNTING FOR WIND OVERTURNING Pier #2

Load Comb. : +1.20D+0.50L+0.50S-1.60W

Axial Load Only, No Moment

Loading

Pu : Axial	116.544	k
Design Plate Height	18.000	in
Design Plate Width	18.000	in
Will be different from entry if partial bearing used.		
A1 : Plate Area	324.000	in^2
A2: Support Area	900.000	in^2
sqrt(A2/A1)	1.667	

Distance for Moment Calculation

" m "	3.395	in
" n "	4.200	in
X	0.141	in^2
Lambda	0.390	
n'	2.975	in
n' * Lambda	1.160	in
L = max(m, n, n")	4.200	in

Bearing Stresses

Fp : Allowable	2.550	ksi
fu : Max. Bearing Pressure	0.360	ksi
Stress Ratio	**0.141**	

Plate Bending Stresses

Mmax = Fu * L^2 / 2	3.173	k-in
fb : Actual	22.561	ksi
Fb : Allowable	45.000	ksi
Stress Ratio	**0.501**	

BELL ENGINEERING
CIVIL & ENVIRONMENTAL
17 ECHO COVE WAY-SPOFFORD, NH 03462
(603) 363-9966

Project Title: TOWNSHEND DAM COVERED BRIDGE
Engineer: RON BELL
Project ID: 2015-055
Project Descr: STP SCTT (1)

Printed: 13 NOV 2015, 1:11PM

Steel Beam

File = C:\Users\Ron\DOCUME~1\ENERCA~1\TOWNSE~1.EC6
ENERCALC, INC. 1983-2013, Build:6.13.8.31, Ver:6.13.12.31

Lic. # : KW-06009396 **Licensee : Bell Engineering**

Description : W36x230 LONGITUDINAL BEAM WITHOUT SNOW LOAD

CODE REFERENCES

Calculations per AISC 360-05, IBC 2006, CBC 2007, ASCE 7-05
Load Combination Set : ASCE 7-05

Material Properties

Analysis Method : Load Resistance Factor Design
Beam Bracing : Beam bracing is defined as a set spacing over all spans
Bending Axis : Major Axis Bending
Load Combination : ASCE 7-05

Fy : Steel Yield : 36.0 ksi
E: Modulus : 29,000.0 ksi

Unbraced Lengths

First Brace starts at 15.0 ft from Left-Most support
Regular spacing of lateral supports on length of beam = 20.0 ft

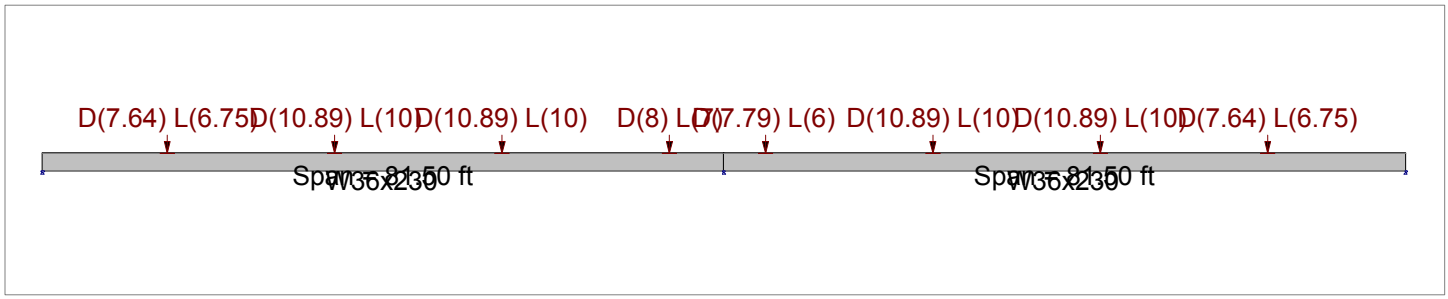

Applied Loads

Service loads entered. Load Factors will be applied for calculations.

Beam self weight calculated and added to loads
Load(s) for Span Number 1
- Point Load : D = 7.640, L = 6.750 k @ 15.0 ft, (#1 CROSS BEAM)
- Point Load : D = 10.890, L = 10.0 k @ 35.0 ft, (#2 CROSS BEAM)
- Point Load : D = 10.890, L = 10.0 k @ 55.0 ft, (#3 CROSS BEAM)
- Point Load : D = 8.0, L = 7.0 k @ 75.0 ft, (#4 CROSS BEAM)

Load(s) for Span Number 2
- Point Load : D = 7.790, L = 6.0 k @ 5.0 ft, (#5 CROSS BEAM)
- Point Load : D = 10.890, L = 10.0 k @ 25.0 ft, (#6 CROSS BEAM)
- Point Load : D = 10.890, L = 10.0 k @ 45.0 ft, (#7 CROSS BEAM)
- Point Load : D = 7.640, L = 6.750 k @ 65.0 ft, (#8 CROSS BEAM)

DESIGN SUMMARY

Design OK

Maximum Bending Stress Ratio =	0.624 : 1	Maximum Shear Stress Ratio =	0.168 : 1
Section used for this span	W36x230	Section used for this span	W36x230
Mu : Applied	1,590.003 k-ft	Vu : Applied	99.244 k
Mn * Phi : Allowable	2,546.100 k-ft	Vn * Phi : Allowable	589.33 k
Load Combination	+1.20D+0.50L+1.60S	Load Combination	+1.20D+0.50L+1.60S
Location of maximum on span	81.500 ft	Location of maximum on span	81.500 ft
Span # where maximum occurs	Span # 1	Span # where maximum occurs	Span # 1

Maximum Deflection

Max Downward L+Lr+S Deflection	0.925 in	Ratio =	1,057
Max Upward L+Lr+S Deflection	0.000 in	Ratio =	0 <360
Max Downward Total Deflection	1.630 in	Ratio =	600
Max Upward Total Deflection	-0.001 in	Ratio =	<180

Overall Maximum Deflections - Unfactored Loads

Load Combination	Span	Max. "-" Defl	Location in Span	Load Combination	Max. "+" Defl	Location in Span
	1	0.0000	0.000		0.0000	0.000
	2	0.0000	0.000		0.0000	0.000

Vertical Reactions - Unfactored

Support notation : Far left is #1 Values in KIPS

Load Combination	Support 1	Support 2	Support 3

BELL ENGINEERING
CIVIL & ENVIRONMENTAL
17 ECHO COVE WAY-SPOFFORD, NH 03462
(603) 363-9966

Project Title: TOWNSHEND DAM COVERED BRIDGE
Engineer: RON BELL
Project ID: 2015-055
Project Descr: STP SCTT (1)

Printed: 13 NOV 2015, 1:11PM

Steel Beam

File = C:\Users\Ron\DOCUME~1\ENERCA~1\TOWNSE~1.EC6
ENERCALC, INC. 1983-2013, Build:6.13.8.31, Ver:6.13.12.31

Lic. # : KW-06009396 **Licensee : Bell Engineering**

Description : W36x230 LONGITUDINAL BEAM WITHOUT SNOW LOAD

Steel Section Properties : W36x230

Depth	=	35.900	in	I xx	=	15,000.00	in^4	J	=	28.600	in^4
Web Thick	=	0.760	in	S xx		837.00	in^3	Cw	=	#####.##	in^6
Flange Width	=	16.470	in	R xx	=	14.900	in				
Flange Thick	=	1.260	in	Zx	=	943.000	in^3				
Area	=	67.600	in^2	I yy	=	940.000	in^4				
Weight	=	230.110	plf	S yy	=	114.000	in^3	Wno	=	143.000	in^2
Kdesign	=	2.210	in	R yy	=	3.730	in	Sw	=	740.000	in^4
K1	=	1.563	in	Zy	=	176.000	in^3	Qf	=	171.000	in^3
rts	=	4.354	in	rT	=	4.300	in	Qw	=	472.000	in^3
Ycg	=	17.950	in								

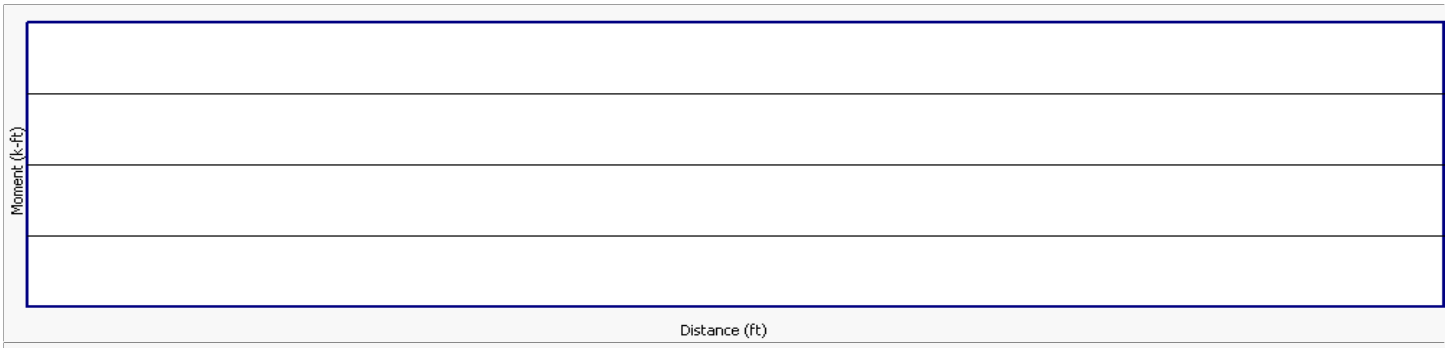

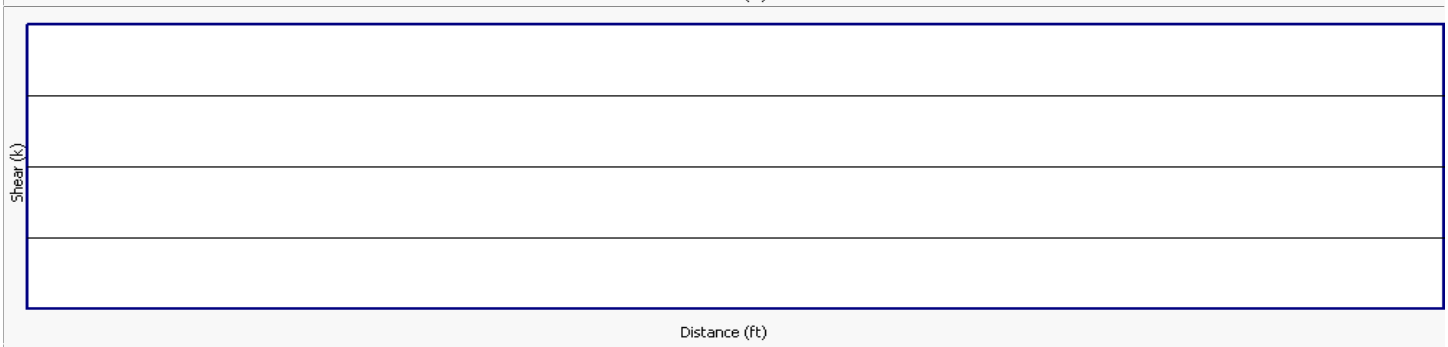

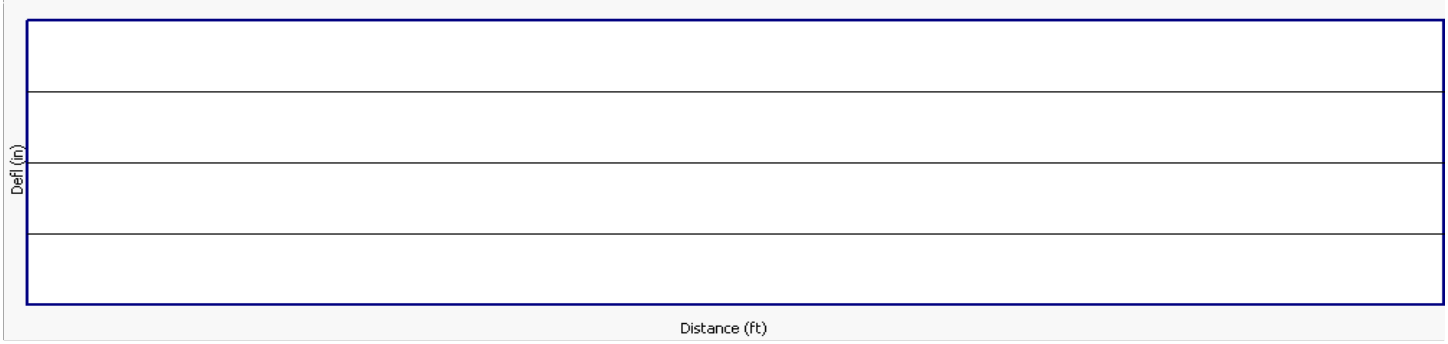

BELL ENGINEERING
CIVIL & ENVIRONMENTAL
17 ECHO COVE WAY-SPOFFORD, NH 03462
(603) 363-9966

Project Title: TOWNSHEND DAM COVERED BRIDGE
Engineer: RON BELL
Project ID: 2015-055
Project Descr: STP SCTT (1)

Printed: 13 NOV 2015, 1:15PM

Steel Beam

File = C:\Users\Ron\DOCUME~1\ENERCA~1\TOWNSE~1.EC6
ENERCALC, INC. 1983-2013, Build:6.13.8.31, Ver:6.13.12.31

Lic. # : KW-06009396 Licensee : Bell Engineering

Description : LONGITUDINAL SUPPORT CROSS BEAM W 22x44

CODE REFERENCES

Calculations per AISC 360-05, IBC 2006, CBC 2007, ASCE 7-05
Load Combination Set : ASCE 7-05

Material Properties

Analysis Method : Load Resistance Factor Design
Beam Bracing : Completely Unbraced
Bending Axis : Major Axis Bending
Load Combination ASCE 7-05

Fy : Steel Yield : 50.0 ksi
E: Modulus : 29,000.0 ksi

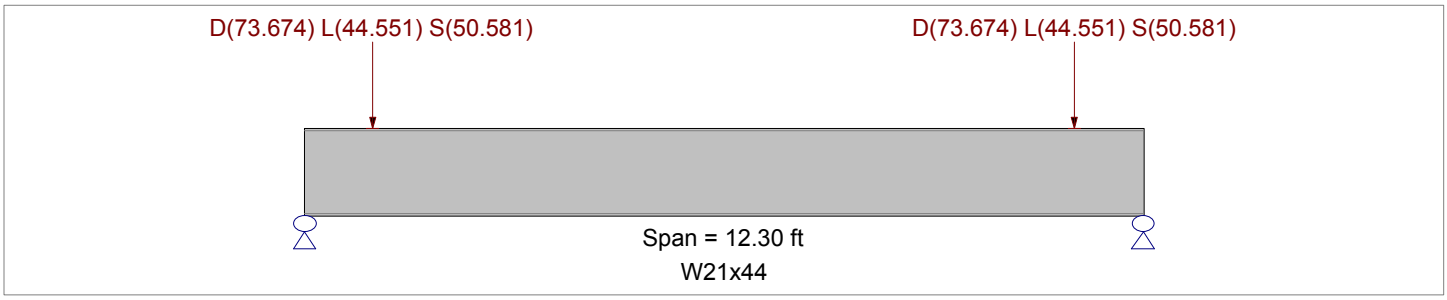

Applied Loads

Service loads entered. Load Factors will be applied for calculations.

Beam self weight calculated and added to loads
Load(s) for Span Number 1
Point Load : D = 73.674, L = 44.551, S = 50.581 k @ 1.0 ft, (CROSS BEAM SUPPORTING W36X230)
Point Load : D = 73.674, L = 44.551, S = 50.581 k @ 11.30 ft

DESIGN SUMMARY

Design OK

Maximum Bending Stress Ratio =	0.624 : 1	Maximum Shear Stress Ratio =	0.168 : 1
Section used for this span	W36x230	Section used for this span	W36x230
Mu : Applied	1,590.003 k-ft	Vu : Applied	99.244 k
Mn * Phi : Allowable	2,546.100 k-ft	Vn * Phi : Allowable	589.33 k
Load Combination	+1.20D+0.50L+1.60S	Load Combination	+1.20D+0.50L+1.60S
Location of maximum on span	81.500 ft	Location of maximum on span	81.500 ft
Span # where maximum occurs	Span # 1	Span # where maximum occurs	Span # 1

Maximum Deflection

Max Downward L+Lr+S Deflection	0.925 in	Ratio =	1,057
Max Upward L+Lr+S Deflection	0.000 in	Ratio =	0 <360
Max Downward Total Deflection	1.630 in	Ratio =	600
Max Upward Total Deflection	-0.001 in	Ratio =	<240

Overall Maximum Deflections - Unfactored Loads

Load Combination	Span	Max. "-" Defl	Location in Span	Load Combination	Max. "+" Defl	Location in Span
	1	0.0000	0.000		0.0000	0.000

Vertical Reactions - Unfactored

Support notation : Far left is #1 Values in KIPS

Load Combination	Support 1	Support 2

Steel Section Properties : W21x44

Depth	=	20.700	in	I xx	=	843.00	in^4	J	=	0.770 in^4
Web Thick	=	0.350	in	S xx		81.60	in^3	Cw	=	2,110.00 in^6
Flange Width	=	6.500	in	R xx	=	8.060	in			
Flange Thick	=	0.450	in	Zx	=	95.400	in^3			
Area	=	13.000	in^2	I yy	=	20.700	in^4			
Weight	=	44.252	plf	S yy	=	6.370	in^3	Wno	=	32.900 in^2
Kdesign	=	0.950	in	R yy	=	1.260	in	Sw	=	24.100 in^4
K1	=	0.813	in	Zy	=	10.200	in^3	Qf	=	14.000 in^3
rts	=	1.600	in	rT	=	1.570	in	Qw	=	46.800 in^3
Ycg	=	10.350	in							

BELL ENGINEERING
CIVIL & ENVIRONMENTAL
17 ECHO COVE WAY-SPOFFORD, NH 03462
(603) 363-9966

Project Title: TOWNSHEND DAM COVERED BRIDGE
Engineer: RON BELL
Project ID: 2015-055
Project Descr: STP SCTT (1)

Printed: 13 NOV 2015, 1:15PM

Steel Beam

File = C:\Users\Ron\DOCUME~1\ENERCA~1\TOWNSE~1.EC6
ENERCALC, INC. 1983-2013, Build:6.13.8.31, Ver:6.13.12.31

Lic. # : KW-06009396 **Licensee : Bell Engineering**

Description : LONGITUDINAL SUPPORT CROSS BEAM W 22x44

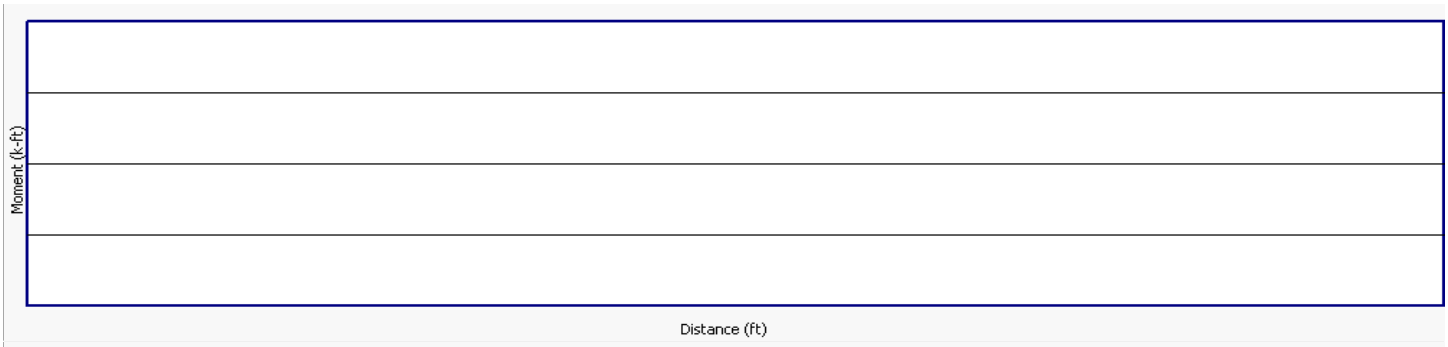

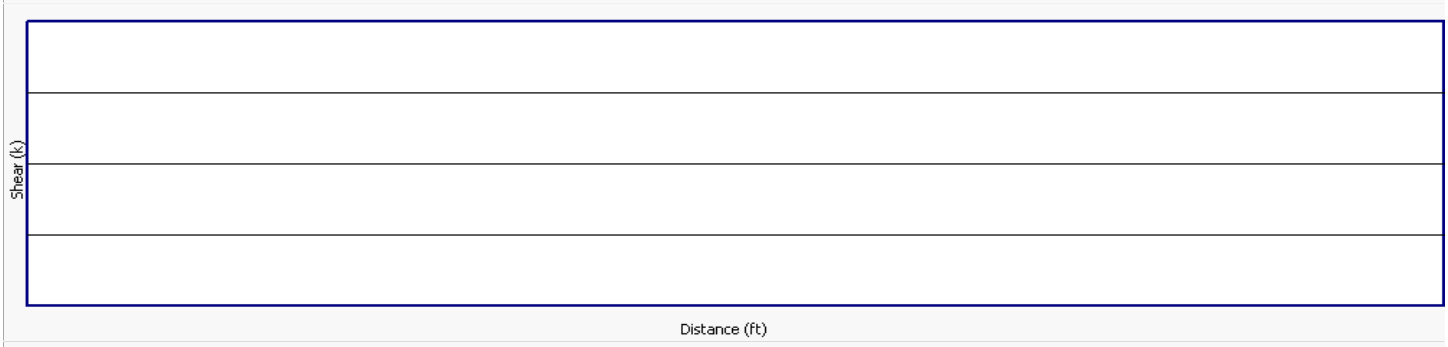

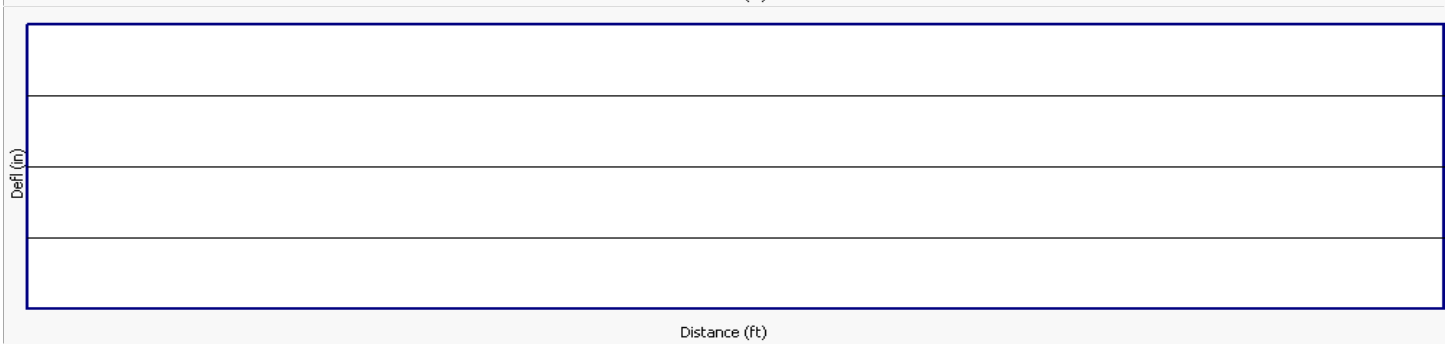

BELL ENGINEERING
CIVIL & ENVIRONMENTAL
17 ECHO COVE WAY-SPOFFORD, NH 03462
(603) 363-9966

Project Title: TOWNSHEND DAM COVERED BRIDGE
Engineer: RON BELL
Project Descr: STP SCTT (1)
Project ID: 2015-055

Printed: 13 NOV 2015, 1:18PM

Steel Beam

File = C:\Users\Ron\DOCUME~1\ENERCA~1\TOWNSE~1.EC6
ENERCALC, INC. 1983-2013, Build:6.13.8.31, Ver:6.13.12.31

Lic. # : KW-06009396 | Licensee : Bell Engineering

Description : LONGITUDINAL SUPPORT CROSS BEAM 18X35

CODE REFERENCES

Calculations per AISC 360-05, IBC 2006, CBC 2007, ASCE 7-05
Load Combination Set : ASCE 7-05

Material Properties

Analysis Method : Load Resistance Factor Design
Beam Bracing : Completely Unbraced
Bending Axis : Major Axis Bending
Load Combination ASCE 7-05

Fy : Steel Yield : 50.0 ksi
E: Modulus : 29,000.0 ksi

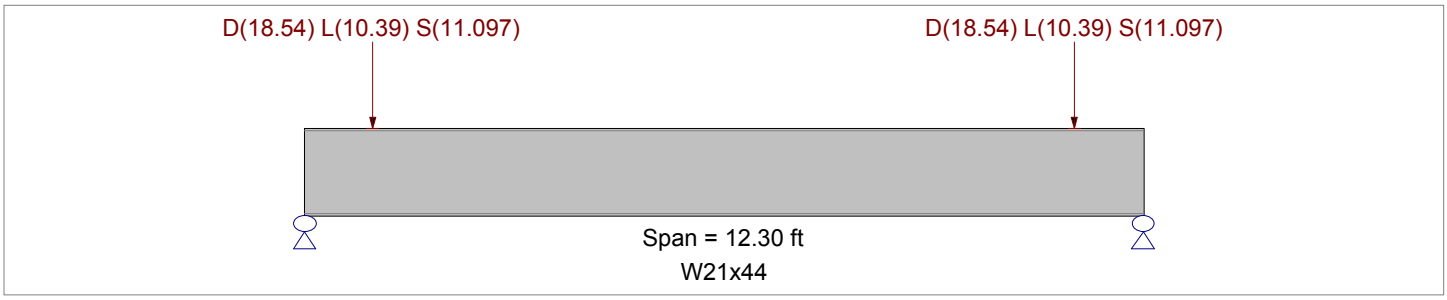

Applied Loads

Service loads entered. Load Factors will be applied for calculations.

Beam self weight calculated and added to loads
Load(s) for Span Number 1
Point Load : D = 18.540, L = 10.390, S = 11.097 k @ 1.0 ft, (CROSS BEAM SUPPORTING W36X230)
Point Load : D = 18.540, L = 10.390, S = 11.097 k @ 11.30 ft

DESIGN SUMMARY

Design OK

Maximum Bending Stress Ratio = **0.852** : 1
Section used for this span **W21x44**
Mu : Applied 192.618 k-ft
Mn * Phi : Allowable 226.137 k-ft
Load Combination +1.20D+0.50L+1.60S
Location of maximum on span 6.150 ft
Span # where maximum occurs Span # 1

Maximum Shear Stress Ratio = **0.883** : 1
Section used for this span **W21x44**
Vu : Applied 191.940 k
Vn * Phi : Allowable 217.350 k
Load Combination +1.20D+0.50L+1.60S
Location of maximum on span 0.000 ft
Span # where maximum occurs Span # 1

Maximum Deflection

Max Downward L+Lr+S Deflection	0.127 in	Ratio =	1,160
Max Upward L+Lr+S Deflection	0.000 in	Ratio =	0 <360
Max Downward Total Deflection	0.227 in	Ratio =	651
Max Upward Total Deflection	0.000 in	Ratio =	0 <240

Overall Maximum Deflections - Unfactored Loads

Load Combination	Span	Max. "-" Defl	Location in Span	Load Combination	Max. "+" Defl	Location in Span
D+L+S	1	0.2267	6.212		0.0000	0.000

Vertical Reactions - Unfactored

Support notation : Far left is #1 Values in KIPS

Load Combination	Support 1	Support 2
Overall MAXimum	169.078	169.078
D Only	73.946	73.946
L Only	44.551	44.551
S Only	50.581	50.581
L+S	95.132	95.132
D+L	118.497	118.497
D+S	124.527	124.527
D+L+S	169.078	169.078

BELL ENGINEERING
CIVIL & ENVIRONMENTAL
17 ECHO COVE WAY-SPOFFORD, NH 03462
(603) 363-9966

Project Title: TOWNSHEND DAM COVERED BRIDGE
Engineer: RON BELL
Project ID: 2015-055
Project Descr: STP SCTT (1)

Printed: 13 NOV 2015, 1:18PM

Steel Beam

File = C:\Users\Ron\DOCUME~1\ENERCA~1\TOWNSE~1.EC6
ENERCALC, INC. 1983-2013, Build:6.13.8.31, Ver:6.13.12.31

Lic. # : KW-06009396 **Licensee : Bell Engineering**

Description : LONGITUDINAL SUPPORT CROSS BEAM 18X35

Steel Section Properties : W21x44

Depth	=	20.700	in	I xx	=	843.00	in^4	J	=	0.770	in^4
Web Thick	=	0.350	in	S xx		81.60	in^3	Cw	=	2,110.00	in^6
Flange Width	=	6.500	in	R xx	=	8.060	in				
Flange Thick	=	0.450	in	Zx	=	95.400	in^3				
Area	=	13.000	in^2	I yy	=	20.700	in^4				
Weight	=	44.252	plf	S yy	=	6.370	in^3	Wno	=	32.900	in^2
Kdesign	=	0.950	in	R yy	=	1.260	in	Sw	=	24.100	in^4
K1	=	0.813	in	Zy	=	10.200	in^3	Qf	=	14.000	in^3
rts	=	1.600	in	rT	=	1.570	in	Qw	=	46.800	in^3
Ycg	=	10.350	in								

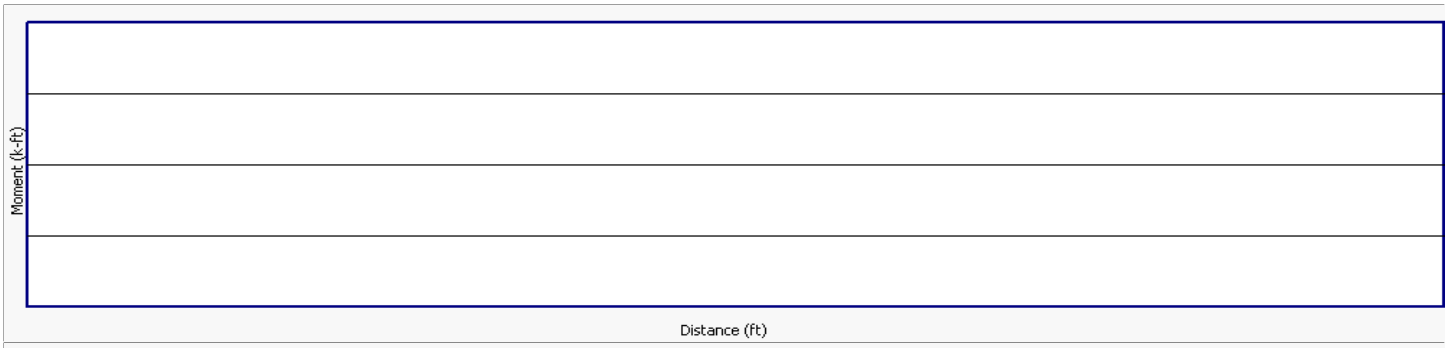

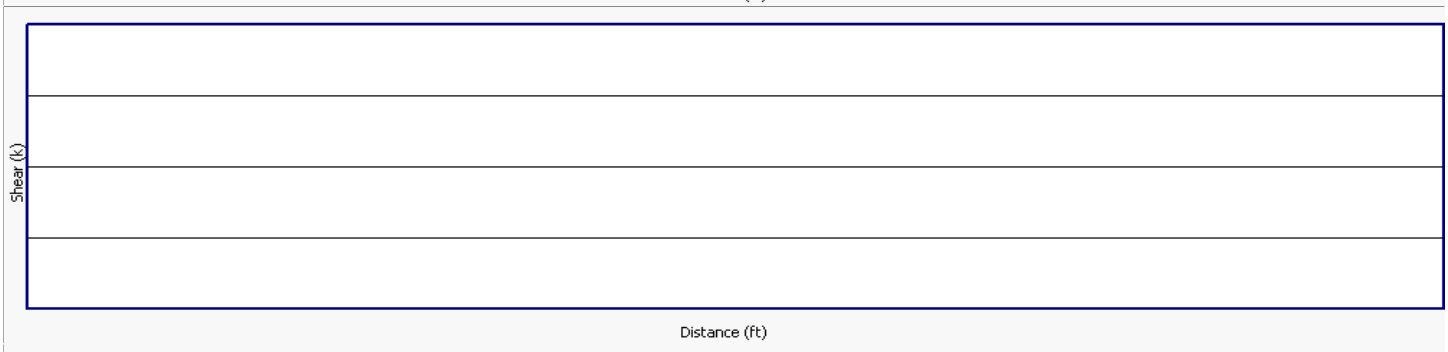

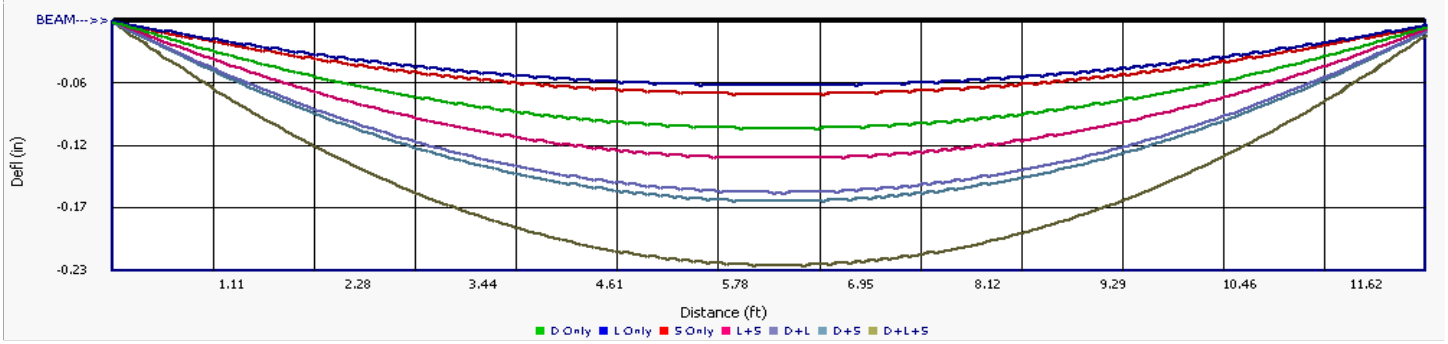

BELL ENGINEERING
CIVIL & ENVIRONMENTAL
17 ECHO COVE WAY-SPOFFORD, NH 03462
(603) 363-9966

Project Title: TOWNSHEND DAM COVERED BRIDGE
Engineer: RON BELL
Project Descr: STP SCTT (1)
Project ID: 2015-055

Printed: 13 NOV 2015, 1:15PM

Steel Beam

File = C:\Users\Ron\DOCUME~1\ENERCA~1\TOWNSE~1.EC6
ENERCALC, INC. 1983-2013, Build:6.13.8.31, Ver:6.13.12.31

Lic. # : KW-06009396 **Licensee : Bell Engineering**

Description : W20x40 CROSS BEAM (WITHOUT LIVE LOAD)

CODE REFERENCES

Calculations per AISC 360-05, IBC 2006, CBC 2007, ASCE 7-05
Load Combination Set : ASCE 7-05

Material Properties

Analysis Method : Load Resistance Factor Design
Beam Bracing : Completely Unbraced
Bending Axis : Major Axis Bending
Load Combination ASCE 7-05

Fy : Steel Yield : 50.0 ksi
E: Modulus : 29,000.0 ksi

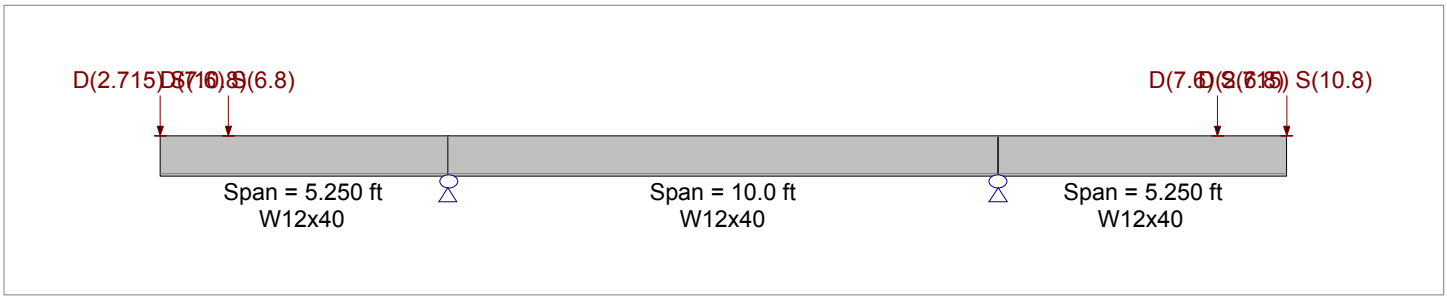

Applied Loads

Service loads entered. Load Factors will be applied for calculations.

Beam self weight calculated and added to loads
Load(s) for Span Number 1
Point Load : D = 2.715, S = 10.80 k @ 0.0 ft
Point Load : D = 7.60, S = 6.80 k @ 1.250 ft
Load(s) for Span Number 3
Point Load : D = 7.60, S = 6.80 k @ 4.0 ft
Point Load : D = 2.715, S = 10.80 k @ 5.250 ft

DESIGN SUMMARY

Design OK

Maximum Bending Stress Ratio =	0.624 : 1	Maximum Shear Stress Ratio =	0.168 : 1
Section used for this span	W36x230	Section used for this span	W36x230
Mu : Applied	1,590.003 k-ft	Vu : Applied	99.244 k
Mn * Phi : Allowable	2,546.100 k-ft	Vn * Phi : Allowable	589.33 k
Load Combination	+1.20D+0.50L+1.60S	Load Combination	+1.20D+0.50L+1.60S
Location of maximum on span	81.500 ft	Location of maximum on span	81.500 ft
Span # where maximum occurs	Span # 1	Span # where maximum occurs	Span # 1

Maximum Deflection

Max Downward L+Lr+S Deflection	0.925 in	Ratio =	1,057
Max Upward L+Lr+S Deflection	0.000 in	Ratio =	0 <180
Max Downward Total Deflection	1.630 in	Ratio =	600
Max Upward Total Deflection	-0.001 in	Ratio =	<120

Overall Maximum Deflections - Unfactored Loads

Load Combination	Span	Max. "-" Defl	Location in Span	Load Combination	Max. "+" Defl	Location in Span
	1	0.0000	0.000		0.0000	0.000
	2	0.0000	0.000		0.0000	0.000
	3	0.0000	0.000		0.0000	0.000

Vertical Reactions - Unfactored

Support notation : Far left is #1 Values in KIPS

Load Combination	Support 1	Support 2	Support 3	Support 4

Steel Section Properties : W12x40

Depth	=	11.900	in	I xx	=	307.00	in^4	J	= 0.906 in^4
Web Thick	=	0.295	in	S xx		51.50	in^3	Cw	= 1,440.00 in^6
Flange Width	=	8.010	in	R xx	=	5.130	in		
Flange Thick	=	0.515	in	Zx	=	57.000	in^3		
Area	=	11.700	in^2	I yy	=	44.100	in^4		
Weight	=	39.827	plf	S yy	=	11.000	in^3	Wno	= 22.800 in^2
Kdesign	=	1.020	in	R yy	=	1.940	in	Sw	= 23.500 in^4
K1	=	0.875	in	Zy	=	16.800	in^3	Qf	= 11.300 in^3
rts	=	2.210	in	rT	=	2.140	in	Qw	= 27.800 in^3
Ycg	=	5.950	in						

BELL ENGINEERING
CIVIL & ENVIRONMENTAL
17 ECHO COVE WAY-SPOFFORD, NH 03462
(603) 363-9966

Project Title: TOWNSHEND DAM COVERED BRIDGE
Engineer: RON BELL
Project ID: 2015-055
Project Descr: STP SCTT (1)

Printed: 13 NOV 2015, 1:15PM

Steel Beam

File = C:\Users\Ron\DOCUME~1\ENERCA~1\TOWNSE~1.EC6
ENERCALC, INC. 1983-2013, Build:6.13.8.31, Ver:6.13.12.31

Lic. # : KW-06009396 **Licensee : Bell Engineering**

Description : W20x40 CROSS BEAM (WITHOUT LIVE LOAD)

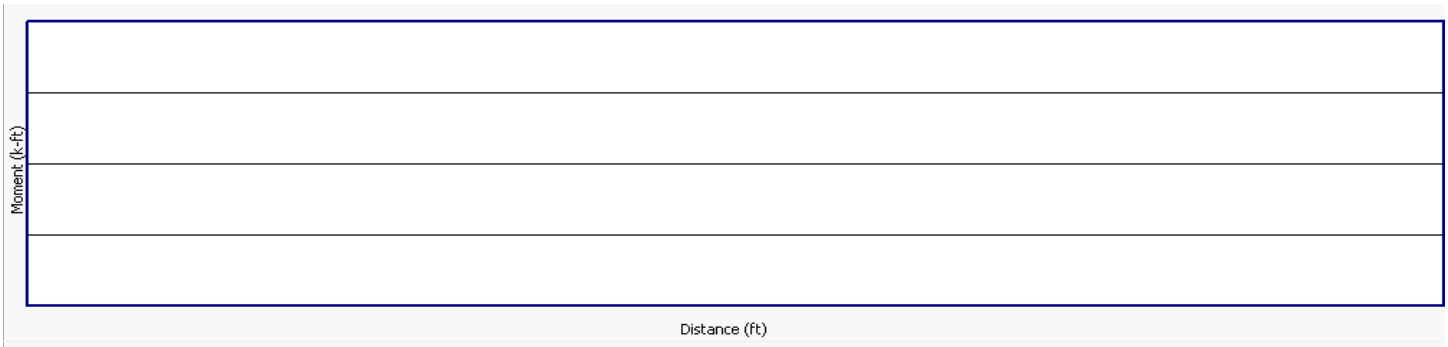

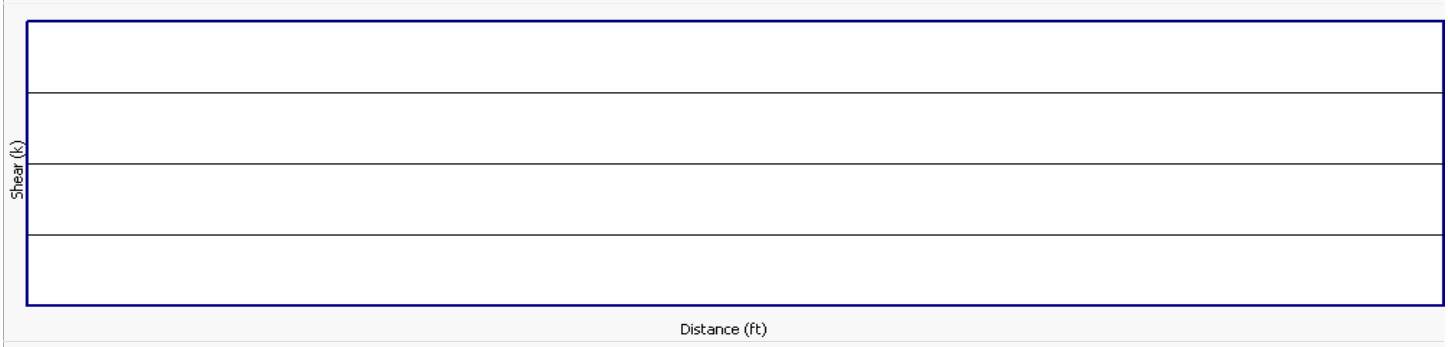

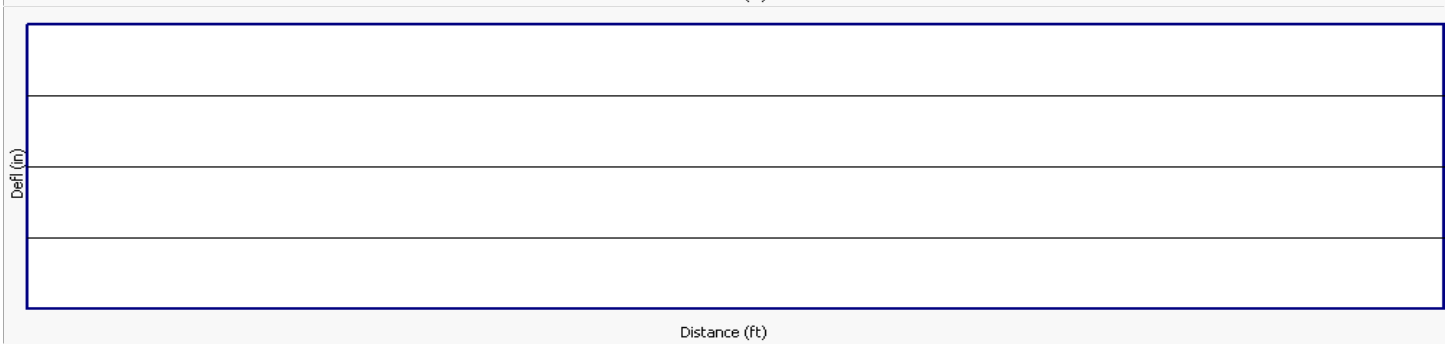

BELL ENGINEERING
CIVIL & ENVIRONMENTAL
17 ECHO COVE WAY-SPOFFORD, NH 03462
(603) 363-9966

Project Title: TOWNSHEND DAM COVERED BRIDGE
Engineer: RON BELL
Project ID: 2015-055
Project Descr: STP SCTT (1)

Printed: 13 NOV 2015, 1:14PM

Steel Beam

File = C:\Users\Ron\DOCUME~1\ENERCA~1\TOWNSE~1.EC6
ENERCALC, INC. 1983-2013, Build:6.13.8.31, Ver:6.13.12.31

Lic. # : KW-06009396 **Licensee : Bell Engineering**

Description : W20x40 CROSS BEAM WITH LIVE LOAD (NO SNOW)

CODE REFERENCES

Calculations per AISC 360-05, IBC 2006, CBC 2007, ASCE 7-05
Load Combination Set : ASCE 7-05

Material Properties

Analysis Method : Load Resistance Factor Design
Beam Bracing : Completely Unbraced
Bending Axis : Major Axis Bending
Load Combination ASCE 7-05

Fy : Steel Yield : 50.0 ksi
E: Modulus : 29,000.0 ksi

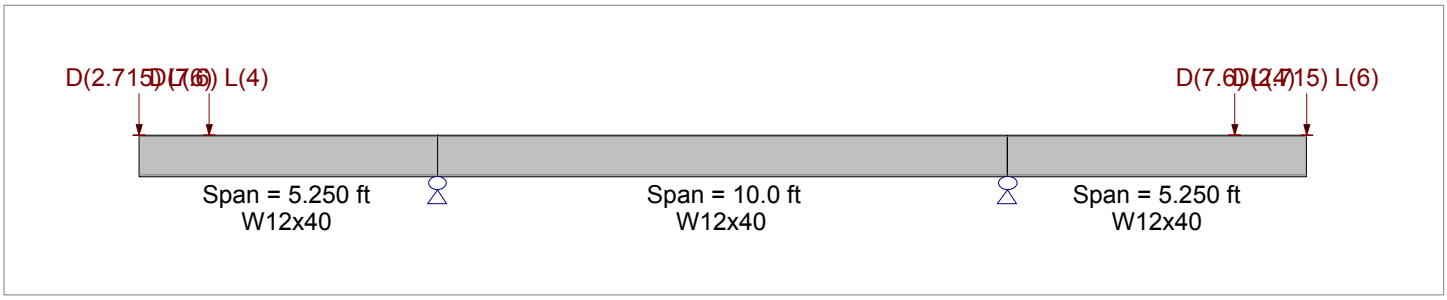

Applied Loads

Service loads entered. Load Factors will be applied for calculations.

Beam self weight calculated and added to loads
Load(s) for Span Number 1
Point Load : D = 2.715, L = 6.0 k @ 0.0 ft
Point Load : D = 7.60, L = 4.0 k @ 1.250 ft
Load(s) for Span Number 3
Point Load : D = 7.60, L = 4.0 k @ 4.0 ft
Point Load : D = 2.715, L = 6.0 k @ 5.250 ft

DESIGN SUMMARY

Design OK

Maximum Bending Stress Ratio =	0.624 : 1	Maximum Shear Stress Ratio =	0.168 : 1
Section used for this span	W36x230	Section used for this span	W36x230
Mu : Applied	1,590.003 k-ft	Vu : Applied	99.244 k
Mn * Phi : Allowable	2,546.100 k-ft	Vn * Phi : Allowable	589.33 k
Load Combination	+1.20D+0.50L+1.60S	Load Combination	+1.20D+0.50L+1.60S
Location of maximum on span	81.500 ft	Location of maximum on span	81.500 ft
Span # where maximum occurs	Span # 1	Span # where maximum occurs	Span # 1

Maximum Deflection

Max Downward L+Lr+S Deflection	0.925 in	Ratio =	1,057
Max Upward L+Lr+S Deflection	0.000 in	Ratio =	0 <240
Max Downward Total Deflection	1.630 in	Ratio =	600
Max Upward Total Deflection	-0.001 in	Ratio =	<180

Overall Maximum Deflections - Unfactored Loads

Load Combination	Span	Max. "-" Defl	Location in Span	Load Combination	Max. "+" Defl	Location in Span
	1	0.0000	0.000		0.0000	0.000
	2	0.0000	0.000		0.0000	0.000
	3	0.0000	0.000		0.0000	0.000

Vertical Reactions - Unfactored

Support notation : Far left is #1 Values in KIPS

Load Combination	Support 1	Support 2	Support 3	Support 4

Steel Section Properties : W12x40

Depth	=	11.900	in	I xx	=	307.00	in^4	J	= 0.906 in^4
Web Thick	=	0.295	in	S xx		51.50	in^3	Cw	= 1,440.00 in^6
Flange Width	=	8.010	in	R xx	=	5.130	in		
Flange Thick	=	0.515	in	Zx	=	57.000	in^3		
Area	=	11.700	in^2	I yy	=	44.100	in^4		
Weight	=	39.827	plf	S yy	=	11.000	in^3	Wno	= 22.800 in^2
Kdesign	=	1.020	in	R yy	=	1.940	in	Sw	= 23.500 in^4
K1	=	0.875	in	Zy	=	16.800	in^3	Qf	= 11.300 in^3
rts	=	2.210	in	rT	=	2.140	in	Qw	= 27.800 in^3
Ycg	=	5.950	in						

BELL ENGINEERING
CIVIL & ENVIRONMENTAL
17 ECHO COVE WAY-SPOFFORD, NH 03462
(603) 363-9966

Project Title: TOWNSHEND DAM COVERED BRIDGE
Engineer: RON BELL
Project ID: 2015-055
Project Descr: STP SCTT (1)

Printed: 13 NOV 2015, 1:14PM

Steel Beam

File = C:\Users\Ron\DOCUME~1\ENERCA~1\TOWNSE~1.EC6
ENERCALC, INC. 1983-2013, Build:6.13.8.31, Ver:6.13.12.31

Lic. # : KW-06009396 **Licensee : Bell Engineering**

Description : W20x40 CROSS BEAM WITH LIVE LOAD (NO SNOW)

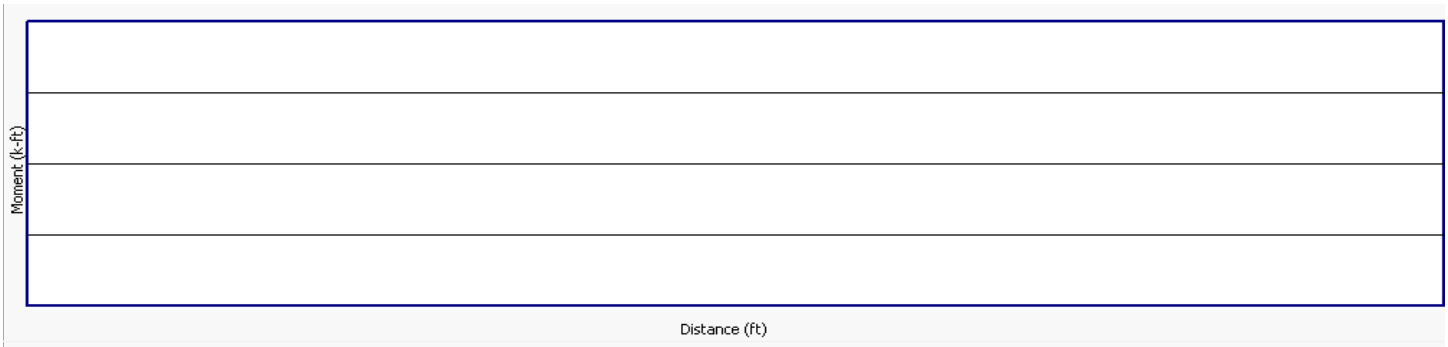

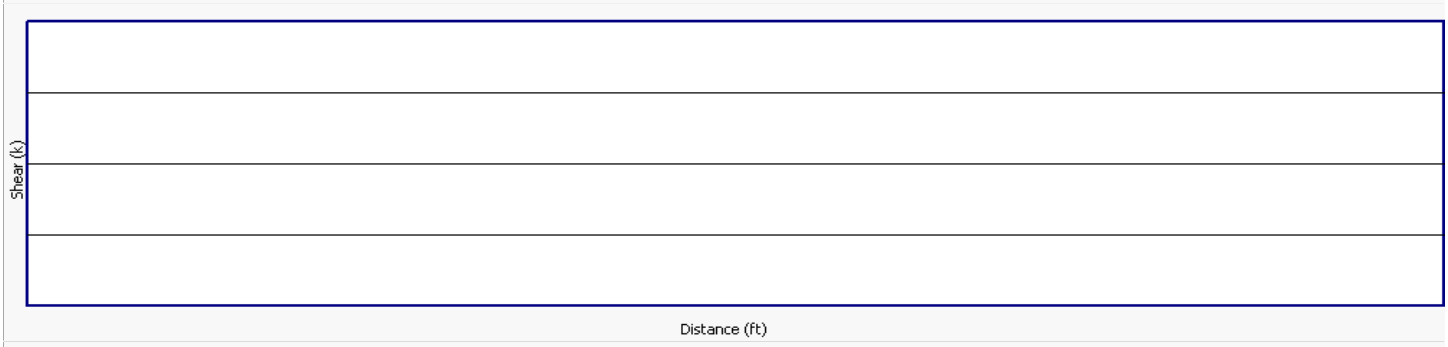

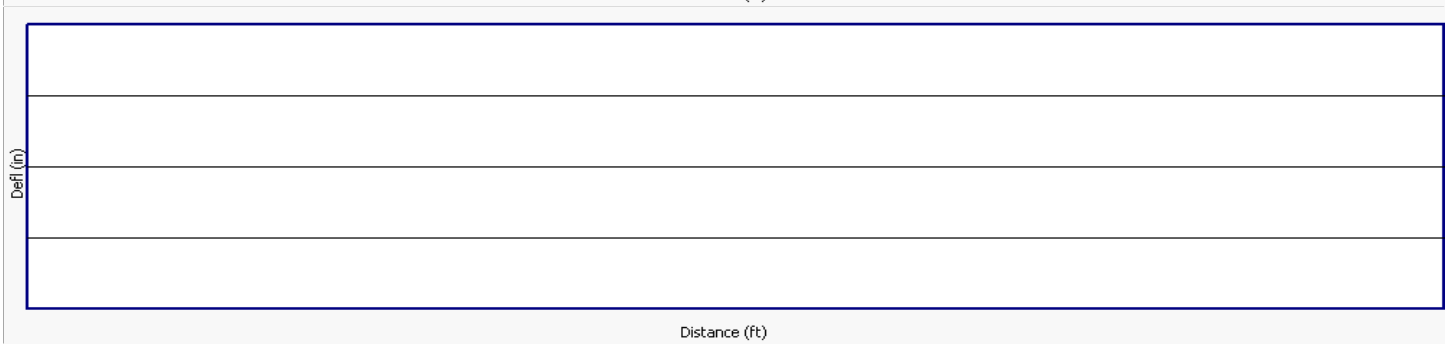

BELL ENGINEERING
CIVIL & ENVIRONMENTAL
17 ECHO COVE WAY-SPOFFORD, NH 03462
(603) 363-9966

Project Title: TOWNSHEND DAM COVERED BRIDGE
Engineer: RON BELL
Project ID: 2015-055
Project Descr: STP SCTT (1)

Printed: 13 NOV 2015, 1:21PM

Wood Beam

File = C:\Users\Ron\DOCUME~1\ENERCA~1\TOWNSE~1.EC6
ENERCALC, INC. 1983-2013, Build:6.13.8.31, Ver:6.13.12.31

Lic. # : KW-06009396 **Licensee : Bell Engineering**

Description : 2X6 SCAFFOLDING PLANK

CODE REFERENCES

Calculations per NDS 2005, IBC 2006, CBC 2007, ASCE 7-05
Load Combination Set : ASCE 7-05

Material Properties

Analysis Method : Load Resistance Factor D
Load Combination :ASCE 7-05

Wood Species : Mixed Southern Pine
Wood Grade : No.2: 2" - 4" Thick : 6" Wide

Beam Bracing : Beam is Fully Braced against lateral-torsion buckling

Fb - Tension	1,150.0 psi
Fb - Compr	1,150.0 psi
Fc - Prll	1,550.0 psi
Fc - Perp	565.0 psi
Fv	175.0 psi
Ft	675.0 psi

E : Modulus of Elasticity

Ebend- xx	1,400.0 ksi
Eminbend - xx	510.0 ksi
Density	32.860 pcf

Repetitive Member Stress Increase

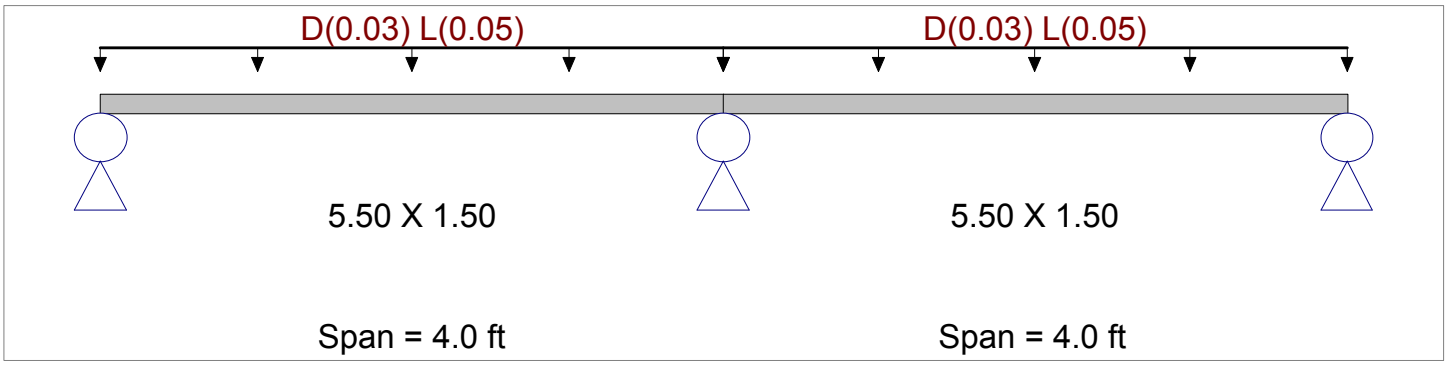

Applied Loads

Service loads entered. Load Factors will be applied for calculations.

Beam self weight calculated and added to loads
Load for Span Number 1
Uniform Load : D = 0.0150, L = 0.0250 ksf, Tributary Width = 2.0 ft
Load for Span Number 2
Uniform Load : D = 0.0150, L = 0.0250 ksf, Tributary Width = 2.0 ft

DESIGN SUMMARY

Design OK

Maximum Bending Stress Ratio	=	0.567 : 1	Maximum Shear Stress Ratio	=	0.140 : 1
Section used for this span		5.50 X 1.50	Section used for this span		5.50 X 1.50
fb : Actual	=	1,376.11 psi	fv : Actual	=	51.35 psi
FB : Allowable	=	2,428.11 psi	Fv : Allowable	=	366.66 psi
Load Combination		+1.20D+0.50Lr+1.60L+1.60H	Load Combination		+1.20D+0.50Lr+1.60L+1.60H
Location of maximum on span	=	4.000 ft	Location of maximum on span	=	3.888 ft
Span # where maximum occurs	=	Span # 1	Span # where maximum occurs	=	Span # 1

Maximum Deflection

Max Downward L+Lr+S Deflection	0.056 in	Ratio =	858
Max Upward L+Lr+S Deflection	0.000 in	Ratio =	0 <240
Max Downward Total Deflection	0.092 in	Ratio =	524
Max Upward Total Deflection	0.000 in	Ratio =	0 <180

Overall Maximum Deflections - Unfactored Loads

Load Combination	Span	Max. "-" Defl	Location in Span	Load Combination	Max. "+" Defl	Location in Span
D+L	1	0.0916	1.698		0.0000	0.000
D+L	2	0.0906	2.324		0.0000	0.000

Vertical Reactions - Unfactored

Support notation : Far left is #1 Values in KIPS

Load Combination	Support 1	Support 2	Support 3
Overall MAXimum	0.123	0.409	0.123
D Only	0.048	0.159	0.048
L Only	0.075	0.250	0.075
D+L	0.123	0.409	0.123

BELL ENGINEERING
CIVIL & ENVIRONMENTAL
17 ECHO COVE WAY-SPOFFORD, NH 03462
(603) 363-9966

Project Title: TOWNSHEND DAM COVERED BRIDGE
Engineer: RON BELL
Project Descr: STP SCTT (1)
Project ID: 2015-055

Printed: 13 NOV 2015, 1:21PM

Wood Beam

File = C:\Users\Ron\DOCUME~1\ENERCA~1\TOWNSE~1.EC6
ENERCALC, INC. 1983-2013, Build:6.13.8.31, Ver:6.13.12.31

Lic. # : KW-06009396 **Licensee : Bell Engineering**

Description : 2X6 SCAFFOLDING PLANK

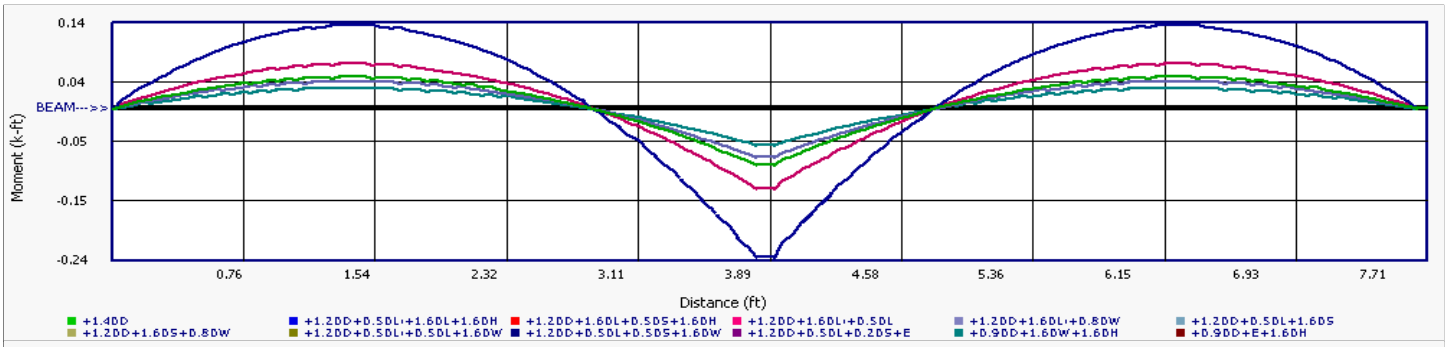

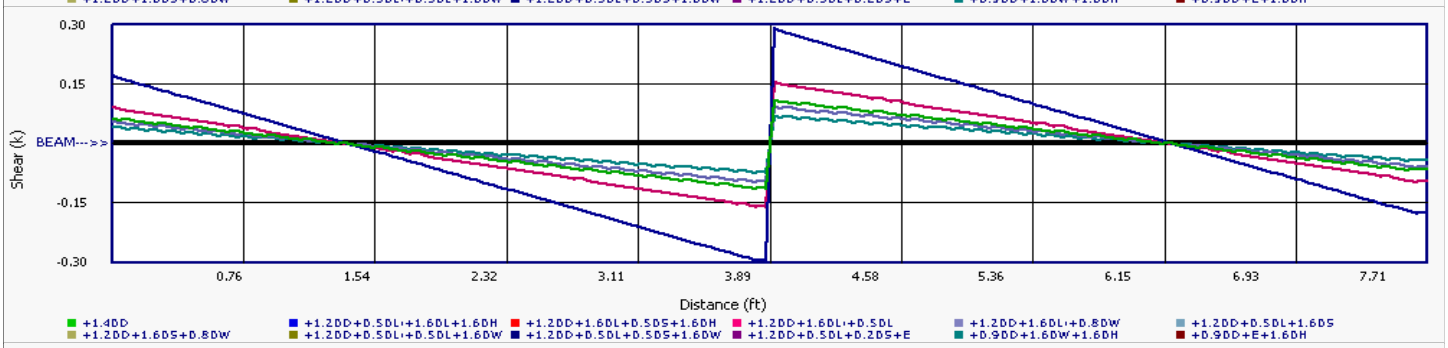

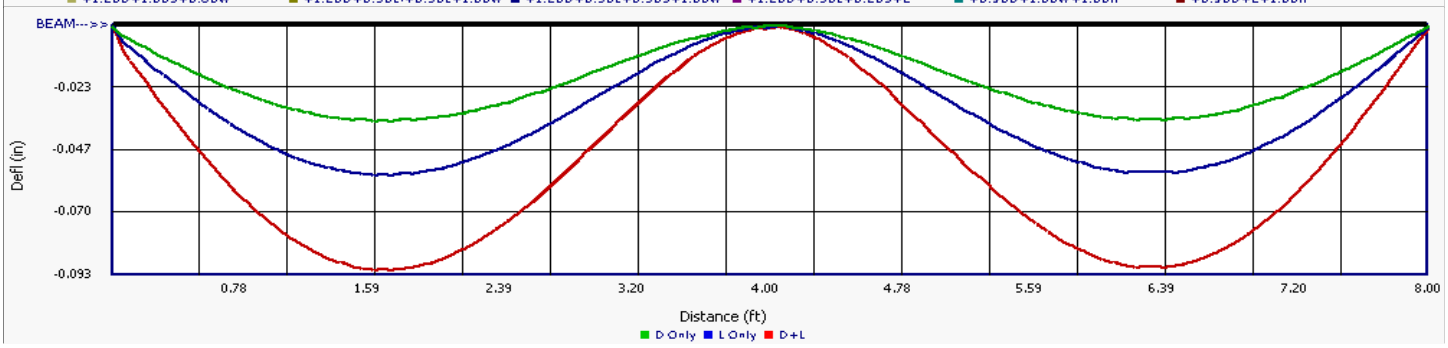

BELL ENGINEERING
CIVIL & ENVIRONMENTAL
17 ECHO COVE WAY-SPOFFORD, NH 03462
(603) 363-9966

Project Title: TOWNSHEND DAM COVERED BRIDGE
Engineer: RON BELL
Project ID: 2015-055
Project Descr: STP SCTT (1)

Printed: 13 NOV 2015, 1:21PM

General Section Property Calculator

File = C:\Users\Ron\DOCUME~1\ENERCA~1\TOWNSE~1.EC6
ENERCALC, INC. 1983-2013, Build:6.13.8.31, Ver:6.13.12.31

Lic. # : KW-06009396 **Licensee : Bell Engineering**

Description : PLYWOOD AND 2X6 SCAFFOLDING

Final Section Properties

Total Area	:	26.250 in^2
Calculated final C.G. distance from Datum :		
X cg Dist.	:	0.0 in
Y cg Dist.	:	0.02143 in
Edge Distances from CG. :		
+X	:	12.0 in
-X	:	-12.0 in
+Y	:	0.7286 in
-Y	:	-1.521 in
Ixx =	:	9.550 in^4
Iyy =	:	884.80 in^4
Sxx : - Y	:	6.277 in^3
Sxx : +Y	:	13.108 in^3
Syy : - X	:	73.733 in^3
Syy : +X	:	73.733 in^3
r xx	:	0.6032 in
r yy	:	5.806 in

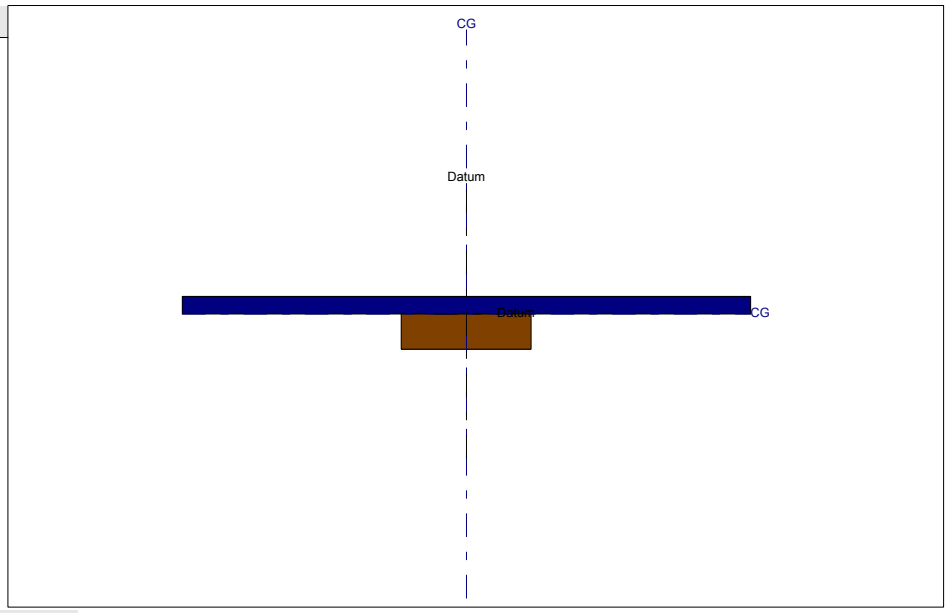

General Shapes

Rect : 1			Height =	0.750 in	Width =	24.000 in	Rotation =	0 dec CCW		
Area =	18.000 in^2	Xcg =	0.000 in	Ixx =	0.844 in^4	Sxx =	2.250 in^3	Rxx =	0.217 in	
		Ycg =	0.375 in	Iyy =	864.000 in^4	Syy =	72.000 in^3	Ryy =	6.928 in	
Rect : 2			Height =	1.500 in	Width =	5.500 in	Rotation =	0 dec CCW		
Area =	8.250 in^2	Xcg =	0.000 in	Ixx =	1.547 in^4	Sxx =	2.063 in^3	Rxx =	0.433 in	
		Ycg =	-0.750 in	Iyy =	20.797 in^4	Syy =	7.563 in^3	Ryy =	1.588 in	

BELL ENGINEERING
CIVIL & ENVIRONMENTAL
17 ECHO COVE WAY-SPOFFORD, NH 03462
(603) 363-9966

Project Title: TOWNSHEND DAM COVERED BRIDGE
Engineer: RON BELL
Project ID: 2015-055
Project Descr: STP SCTT (1)

Printed: 13 NOV 2015, 1:22PM

Steel Column

File = C:\Users\Ron\DOCUME~1\ENERCA~1\TOWNSE~1.EC6
ENERCALC, INC. 1983-2013, Build:6.13.8.31, Ver:6.13.12.31

Lic. # : KW-06009396 **Licensee : Bell Engineering**

Description : GUARD RAIL POST

Code References

Calculations per AISC 360-05, IBC 2006, CBC 2007, ASCE 7-05
Load Combinations Used : ASCE 7-05

General Information

Steel Section Name : **HSS2-1/4x2-1/4x1/4**
Analysis Method : Load Resistance Factor
Steel Stress Grade A-992, High Strength, Low Alloy, Fy = 5
Fy : Steel Yield 50.0 ksi
E : Elastic Bending Modulus 29,000.0 ksi
Load Combination : ASCE 7-05

Overall Column Height 4.0 ft
Top & Bottom Fixity Top Free, Bottom Fixed
Brace condition for deflection (buckling) along columns :
X-X (width) axis :
Unbraced Length for X-X Axis buckling = 4.0 ft, K = 1.0
Y-Y (depth) axis :
Unbraced Length for Y-Y Axis buckling = 4.0 ft, K = 1.0

Applied Loads

Service loads entered. Load Factors will be applied for calculations.

Column self weight included : 24.904 lbs * Dead Load Factor
BENDING LOADS . . .
Lat. Point Load at 3.70 ft creating Mx-x, D = 0.10, L = 0.50 k

DESIGN SUMMARY

Bending & Shear Check Results

PASS Max. Axial+Bending Stress Ratio = **0.7094** : 1
Load Combination +1.20D+0.50Lr+1.60L+1.60H
Location of max.above base 0.0 ft
At maximum location values are . . .
Pu 0.02988 k
0.9 * Pn 60.415 k
Mu-x -3.404 k-ft
0.9 * Mn-x : 4.80 k-ft
Mu-y 0.0 k-ft
0.9 * Mn-y : 4.80 k-ft

PASS Maximum Shear Stress Ratio = **0.05657** : 1
Load Combination +1.20D+0.50Lr+1.60L+1.60H
Location of max.above base 0.0 ft
At maximum location values are . . .
Vu : Applied 0.920 k
Vn * Phi : Allowable 16.262 k

Maximum SERVICE Load Reactions . .
Top along X-X 0.0 k
Bottom along X-X 0.0 k
Top along Y-Y 0.0 k
Bottom along Y-Y 0.60 k

Maximum SERVICE Load Deflections . . .
Along Y-Y 0.5963 in at 4.0 ft above base
for load combination :D+L
Along X-X 0.0 in at 0.0 ft above base
for load combination :

Maximum Deflections for Load Combinations - Unfactored Loads

Load Combination	Max. X-X Deflection		Distance		Max. Y-Y Deflection		Distance	
D Only	0.0000	in	0.000	ft	0.099	in	4.000	ft
L Only	0.0000	in	0.000	ft	0.497	in	4.000	ft
D+L	0.0000	in	0.000	ft	0.590	in	3.973	ft

BELL ENGINEERING
CIVIL & ENVIRONMENTAL
17 ECHO COVE WAY-SPOFFORD, NH 03462
(603) 363-9966

Project Title: TOWNSHEND DAM COVERED BRIDGE
Engineer: RON BELL
Project ID: 2015-055
Project Descr: STP SCTT (1)

Printed: 13 NOV 2015, 1:22PM

Steel Column

File = C:\Users\Ron\DOCUME~1\ENERCA~1\TOWNSE~1.EC6
ENERCALC, INC. 1983-2013, Build:6.13.8.31, Ver:6.13.12.31

Lic. # : KW-06009396 **Licensee : Bell Engineering**

Description : GUARD RAIL POST

Steel Section Properties : HSS2-1/4x2-1/4x1/4

Depth	=	2.250	in	I xx	=	1.13	in^4	J	=	1.960	in^4
				S xx	=	1.01	in^3				
Width	=	2.250	in	R xx	=	0.806	in				
Wall Thick	=	0.250	in	Zx	=	1.280	in^3				
Area	=	1.740	in^2	I yy	=	1.130	in^4	C	=	1.850	in^3
Weight	=	6.226	plf	S yy	=	1.010	in^3				
				R yy	=	0.806	in				
Ycg	=	0.000	in								

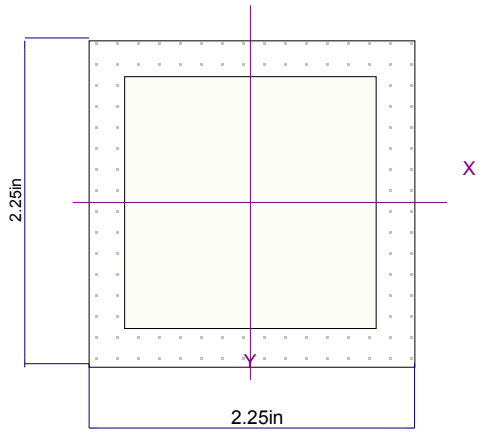

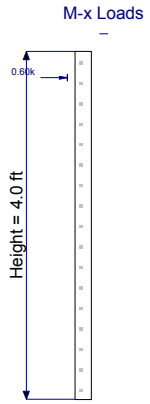

Loads are total entered value. Arrows do not reflect absolute direction.

BELL ENGINEERING
CIVIL & ENVIRONMENTAL
17 ECHO COVE WAY-SPOFFORD, NH 03462
(603) 363-9966

Project Title: TOWNSHEND DAM COVERED BRIDGE
Engineer: RON BELL
Project ID: 2015-055
Project Descr: STP SCTT (1)

Printed: 13 NOV 2015, 1:07PM

Steel Column

File = C:\Users\Ron\DOCUME~1\ENERCA~1\TOWNSE~1.EC6
ENERCALC, INC. 1983-2013, Build:6.13.8.31, Ver:6.13.12.31

Lic. # : KW-06009396 **Licensee : Bell Engineering**

Description : GUARD RAIL POST

Code References

Calculations per AISC 360-05, IBC 2006, CBC 2007, ASCE 7-05
Load Combinations Used : ASCE 7-05

General Information

Steel Section Name : **HSS2-1/4x2-1/4x1/4**
Analysis Method : Load Resistance Factor
Steel Stress Grade A-992, High Strength, Low Alloy, Fy =
Fy : Steel Yield 50.0 ksi
E : Elastic Bending Modulus 29,000.0 ksi
Load Combination : ASCE 7-05

Overall Column Height 4.0 ft
Top & Bottom Fixity Top Free, Bottom Fixed
Brace condition for deflection (buckling) along columns :
X-X (width) axis :
Unbraced Length for X-X Axis buckling = 4.0 ft, K = 1.0
Y-Y (depth) axis :
Unbraced Length for Y-Y Axis buckling = 4.0 ft, K = 1.0

Applied Loads

Service loads entered. Load Factors will be applied for calculations.

Column self weight included : 24.904 lbs * Dead Load Factor
BENDING LOADS . . .
Lat. Point Load at 3.70 ft creating Mx-x, D = 0.10, L = 0.50 k

DESIGN SUMMARY

Bending & Shear Check Results

PASS Max. Axial+Bending Stress Ratio = **0.7094** : 1
Load Combination +1.20D+0.50Lr+1.60L+1.60H
Location of max.above base 0.0 ft
At maximum location values are . . .
Pu 0.02988 k
0.9 * Pn 60.415 k
Mu-x -3.404 k-ft
0.9 * Mn-x : 4.80 k-ft
Mu-y 0.0 k-ft
0.9 * Mn-y : 4.80 k-ft

PASS Maximum Shear Stress Ratio = **0.05657** : 1
Load Combination +1.20D+0.50Lr+1.60L+1.60H
Location of max.above base 0.0 ft
At maximum location values are . . .
Vu : Applied 0.920 k
Vn * Phi : Allowable 16.262 k

Maximum SERVICE Load Reactions . .
Top along X-X 0.0 k
Bottom along X-X 0.0 k
Top along Y-Y 0.0 k
Bottom along Y-Y 0.60 k

Maximum SERVICE Load Deflections . . .
Along Y-Y 0.5963 in at 4.0 ft above base
for load combination :D+L
Along X-X 0.0 in at 0.0 ft above base
for load combination :

Maximum Deflections for Load Combinations - Unfactored Loads

Load Combination	Max. X-X Deflection		Distance		Max. Y-Y Deflection		Distance	
D Only	0.0000	in	0.000	ft	0.099	in	4.000	ft
L Only	0.0000	in	0.000	ft	0.497	in	4.000	ft
D+L	0.0000	in	0.000	ft	0.590	in	3.973	ft

BELL ENGINEERING
CIVIL & ENVIRONMENTAL
17 ECHO COVE WAY-SPOFFORD, NH 03462
(603) 363-9966

Project Title: TOWNSHEND DAM COVERED BRIDGE
Engineer: RON BELL
Project ID: 2015-055
Project Descr: STP SCTT (1)

Printed: 13 NOV 2015, 1:07PM

Steel Column

File = C:\Users\Ron\DOCUME~1\ENERCA~1\TOWNSE~1.EC6
ENERCALC, INC. 1983-2013, Build:6.13.8.31, Ver:6.13.12.31

Lic. # : KW-06009396 **Licensee : Bell Engineering**

Description : GUARD RAIL POST

Steel Section Properties : HSS2-1/4x2-1/4x1/4

Depth	=	2.250	in	I xx	=	1.13	in^4	J	=	1.960	in^4
				S xx	=	1.01	in^3				
Width	=	2.250	in	R xx	=	0.806	in				
Wall Thick	=	0.250	in	Zx	=	1.280	in^3				
Area	=	1.740	in^2	I yy	=	1.130	in^4	C	=	1.850	in^3
Weight	=	6.226	plf	S yy	=	1.010	in^3				
				R yy	=	0.806	in				
Ycg	=	0.000	in								

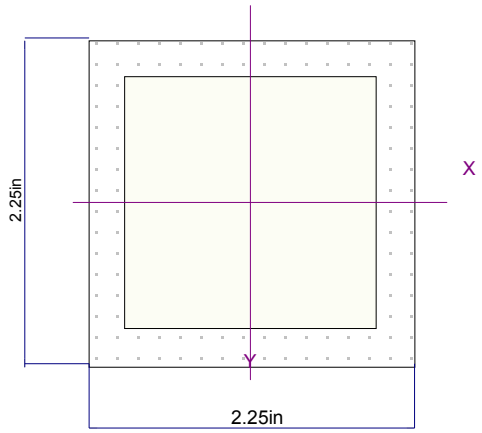

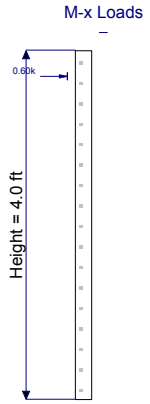

Loads are total entered value. Arrows do not reflect absolute direction.

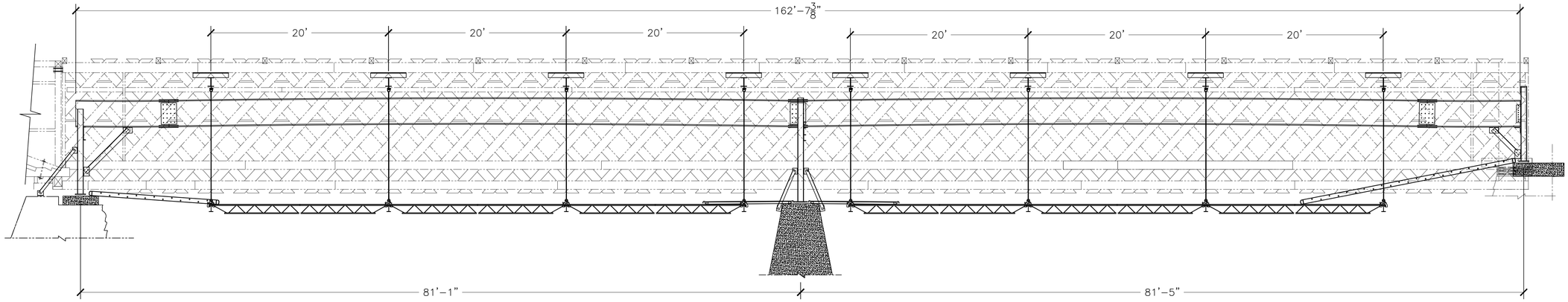

INSTALLED SHORING ELEVATION
NOT TO SCALE

*KINGPOST TRUSS NOT SHOWN FOR CLARITY

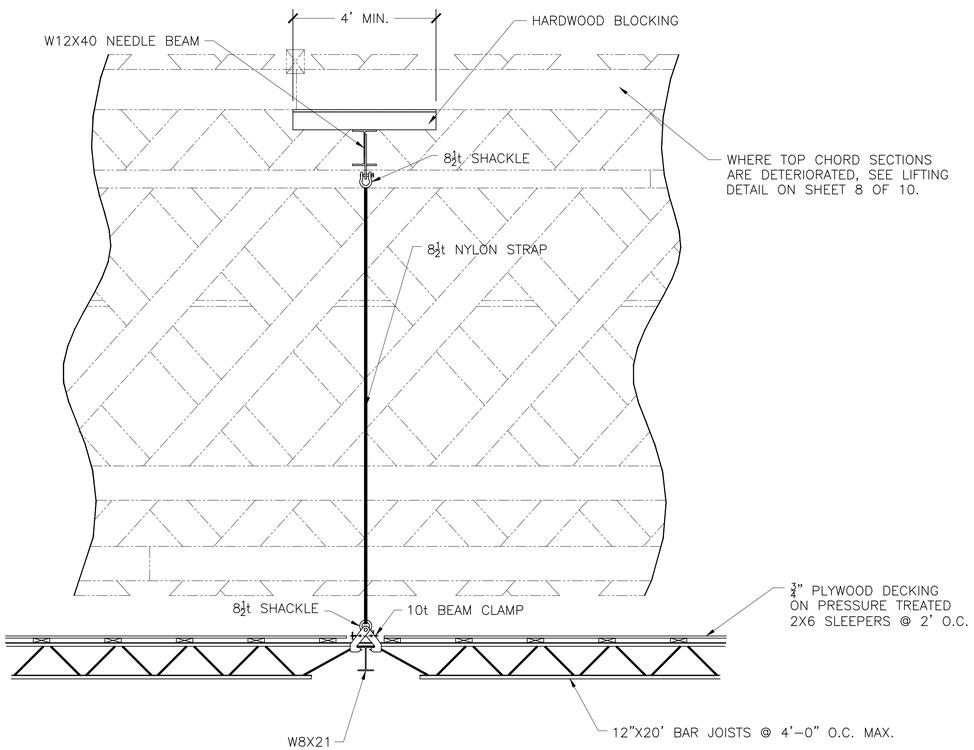

NEEDLE BEAM ELEVATION

*RAILS NOT SHOWN FOR CLARITY

INSTALLATION SEQUENCE:

1) REMOVE FLOORING & SUBSTRUCTURE OVER PIERS 2 & 3 TO ALLOW ACCESS WHERE COLUMNS WILL BE BEARING. (ON PIER 2 POUR CONCRETE PADS OVER STONE ABUTMENT TO ALLOW FOR STABLE BEARING SURFACE (CONCRETE USED SHALL BE 5,000 PSI MIX).
2) REMOVE PAVEMENT ON RTE. 30 END BEHIND BACKWALL OF ABUT. 2. POUR PADS WHERE COLUMNS WILL BE BEARING (CONCRETE PADS SHALL BE 5,000 PSI MIX.).
3) REMOVE ROOFING AND ROOF FRAME ABOVE PIERS 2 & 3, AND ABOVE ABUT. 2, TO ALLOW FOR COLUMNS TO BE SET WITH A CRANE DOWN THROUGH THE ROOF SYSTEM.
4) CONSTRUCT BLOCKING/ CRIBBING TOWERS ON ABUT. 1 & PIER 2 FOR ROLLERS TO SET UPON. INSTALL COLUMNS AND CROSS BEAMS ON PIERS 2 & 3. CRIBBING TOWERS ARE TO BE CONSTRUCTED FROM 6X8 SYP #1 OR BTR. LUMBER. ALL SHIMS AND SMALLER BLOCKING NEEDED SHALL BE CONSTRUCTED FROM HARDWOOD BLOCKING OR STEEL PLATE. THE ROLLERS BEING USED SHALL BE 50 TON HILLMAN TANK STYLE ROLLERS.
5) ROLL W36X230'S INTO BRIDGE FROM ABUT. 1 END AS AN ASSEMBLED PAIR. AS BEAMS ARE ROLLED IN, BOLT SPLICE SECTIONS TOGETHER, OMITTING BOTTOM SPLICE CONNECTIONS TO ALLOW FOR SMOOTH ROLLING. ONCE LAST SECTION IS BOLTED ON, ADD BALLAST TO END OF BEAMS. BEAMS WILL BE PULLED FROM THE RTE. 30 END. AN EXCAVATOR (MIN. JOHN DEERE 230) WILL BE POSITIONED ON THE ABUT. 1 END, WITH A CABLE ATTACHED AS BACKUP SAFETY.
6) LIFT BEAMS FROM BOTH ENDS WITH A CRANE ON EACH END. FIELD LOCATE, DRILL & BOLT TO SHEAR CONNECTION ON ABUT. 2 END. OVER PIERS 2 & 3, FIELD LOCATE, DRILL & BOLT SUPPORTING CROSS BEAM. (THE CRANES USED WILL BE; A TEREX 75 TON T775 POSITIONED ON THE ROUTE 30 END OF THE BRIDGE WITHIN THE RADIUS REQUIRED FOR A 45,000 LB. LIFT, USING THE NECESSARY RIGGING. A 180 TON DEMAG AC160 WILL BE PLACED ON A SUITABLE PAD ON THE DIRT ROAD END, WITHIN THE ALLOWABLE RADIUS FOR A 48,000 LB LIFT OVER THE PIER 2 LOCATION.
7) INSTALL BOTTOM SPLICE PLATE CONNECTIONS & FILL LOWER HOLES IN COLUMNS WITH BOLTS.
8) INSTALL ALL BRACING
9) INSTALL NEEDLE BEAMS THAT CAN BE ACCESSED WITHOUT REMOVING PORTIONS OF THE LAMINATED ARCH.
10) APPLY MINIMAL LOAD TO THE INSTALLED NEEDLE BEAMS.
11) INSTALL NEEDLE BEAMS IN REGION THAT IS INTERFERED BY THE LAMINATED ARCH. BEGIN WORKING FROM THE OUTSIDE TOWARD THE MIDDLE ON BOTH ENDS. (ONLY REMOVE ENOUGH ARCH THAT IS REQUIRED TO INSTALL THE BEAMS). APPLY LOAD TO THE NEEDLE BEAMS AS THEY ARE INSTALLED. SEE SHEET 10 FOR LAMINATED ARCH REMOVAL SEQUENCING.
12) AS NECESSARY, DUE TO TOP CHORD DETERIORATION OR REPLACEMENT, USE THE SUPPORT CONFIGURATION AS SHOWN ON SHEET 8.
13) INSTALL SCAFFOLDING, WORK PLATFORMS RAILINGS AND SAFETY TIE-OFFS AS NEEDED BELOW THE BRIDGE.
14) REMOVE THE FOLLOWING FROM THE BRIDGE IN SEQUENCE:
    - 14)1) LAMINATED ARCH
    - 14)2) SIDING
    - 14)3) ROOFING
    - 14)4) FLOORING/ FLOOR SYSTEM
15) ADJUST BLOCKING THICKNESS AND NEEDLE BEAM HEIGHTS TO ACHIEVE DESIRED FINISHED BRIDGE PROFILE.
16) BEGIN COMPONENT REPLACEMENT.

SHEET NAME: SHORING PLANS

REV. NO.	DATE:
1	11/12/15

R.I.B. RENAUD BROS. INC.
STEEL SALES & FABRICATION
VERNON VT., USA
283 FT. BRIDGMAN RD. VERNON VT., 05354
PH. (802) 257-7383 FAX (802) 257-7308

PROJECT NAME: TOWNSHEND
PROJECT NO: STP SCTT(1)

DRAWN BY:	CHK'D BY:	DATE:
A.D.	M.R.	10/27/15

SHEET NO. S1 OF 10

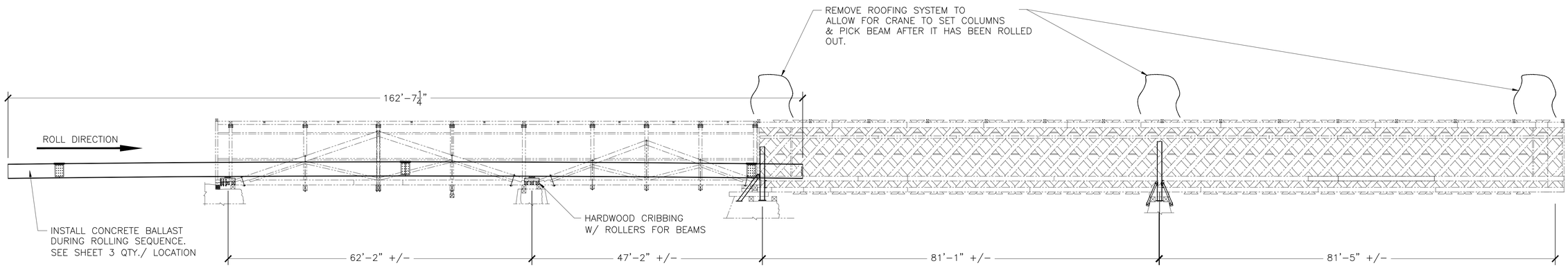

**DURING ROLLING OPERATIONS, BOTTOM OF BEAM WILL BE 2' OR LESS FROM TOP OF EXISTING FLOOR. BEAM WILL BE LIFTED INTO POSITION AFTER BEING ROLLED INTO PLACE.

ROLLING ELEVATION
NOT TO SCALE

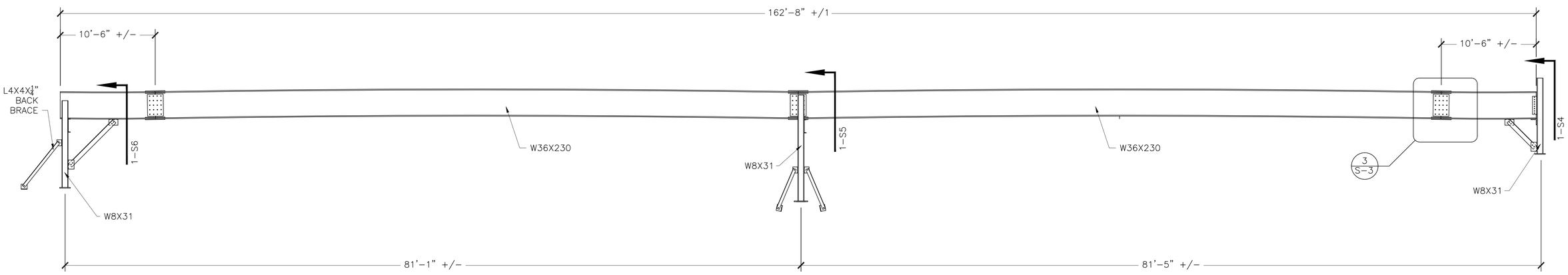

BEAM & SUPPORT COLUMNS
NOT TO SCALE

REV. NO.	DATE:
1	11/12/15

B. R. I. RENAUD BROS. INC.
STEEL SALES & FABRICATION
VERNON VT. USA
283 FT. BRIDGMAN RD. VERNON VT., 05354
PH. (802) 257-7383 FAX (802) 257-7308

SHEET NAME: SHORING PLANS

PROJECT NAME: TOWNSHEND

PROJECT NO: STP SCTT(1)

DRAWN BY:	CHK'D BY:	DATE:
A.D.	M.R.	10/27/15

SHEET NO. S2 OF 10

C:\Users\AD-Renaud\Documents\Work in Progress 2015\TOWNSHEND COVERED BRIDGE\DRAWINGS\SHORING PLAN 10272015.dwg, 11/13/2015 3:40:36 PM

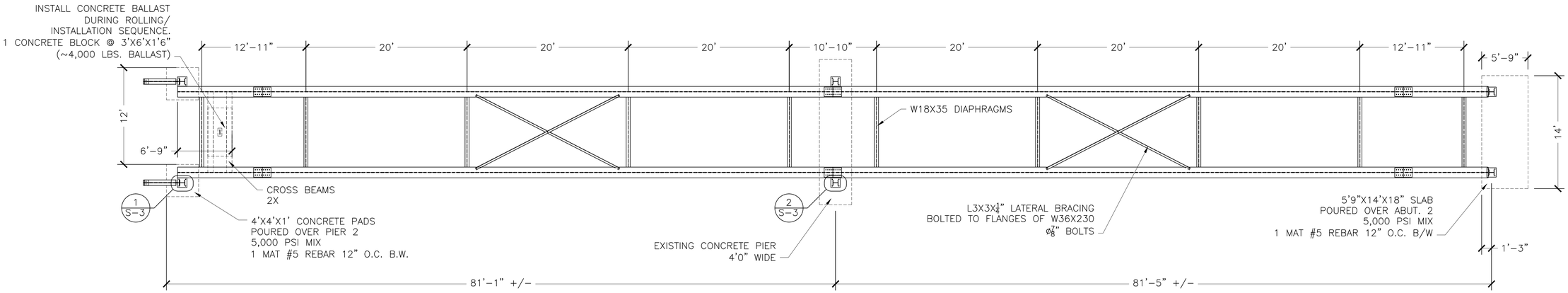

LIFTING FRAME PLAN
NOT TO SCALE

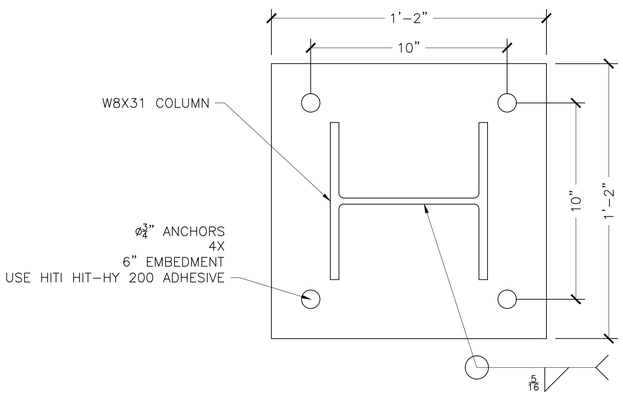

1/S-3 BASEPLATE PLAN PIER 2/ ABUT. 2
MAT'L: 3/4" PLATE

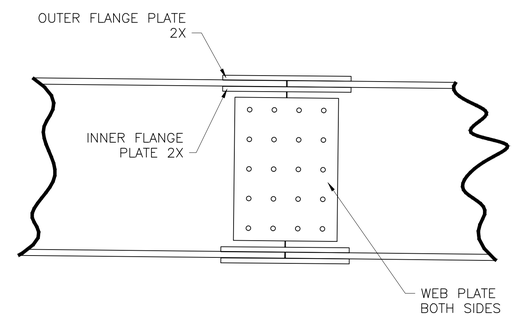

WEIGHT OF CARRYING BEAMS			
DESCRIPTION	WEIGHT/EA.	QTY.	TOTAL
W36X230 CARRYING BEAMS	37,500 LBS.	2	75,000 LBS.
W18X35 DIAPHRAGMS	345 LBS.	10	3,450 LBS.
DIAPHRAGM CONN. ANGLES	25 LBS.	24	600 LBS.
LATERAL BRACE ANGLES	140 LBS.	4	560 LBS.
CONNECTION SPLICES	800 LBS.	6	4,800 LBS.
BALLAST	4,000 LBS.	1	4,000 LBS.
TOTAL WEIGHT:			88,410 LBS.

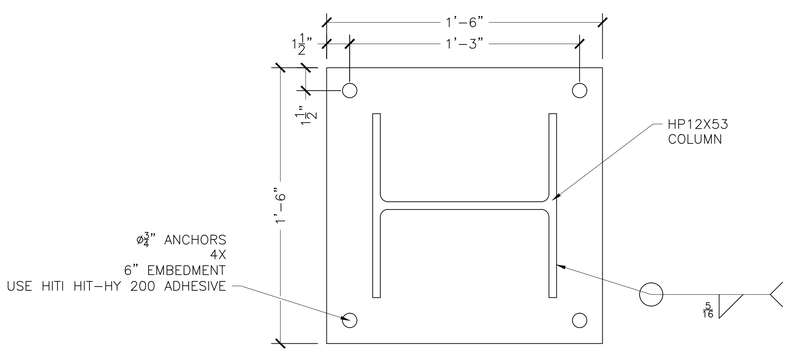

2/S-3 BASEPLATE PLAN PIER 2
MAT'L: 3/4" PLATE

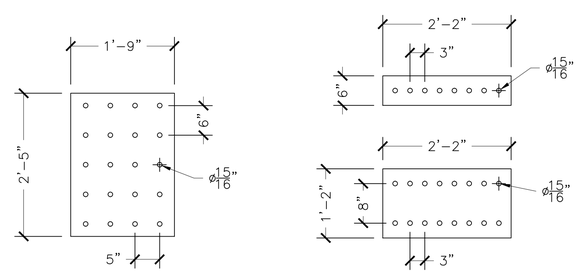

3/S-3 SPLICE DETAILS
MAT'L: 1" PLATE
*BOLTS: USE ø7/8" A325 OR A490 BOLTS IN ø15/16" HOLES

SHEET NAME: SHORING PLANS

REV. NO.	DATE:
1	11/12/15

R.B.I. RENAUD BROS. INC.
STEEL SALES & FABRICATION
VERNON VT., USA
283 FT. BRIDGMAN RD. VERNON VT., 05354
PH. (802) 257-7383 FAX (802) 257-7308

PROJECT NAME: TOWNSHEND
PROJECT NO: STP SCTT(1)
DRAWN BY: A.D. | CHK'D BY: M.R. | DATE: 10/27/15
SHEET NO. S3 OF 10

C:\Users\ADrunken\Documents\Works in Progress 2015\TOWNSHEND COVERED BRIDGE\DRAWINGS\SHORING PLAN 10272015.dwg, 11/11/2015 3:40:38 PM

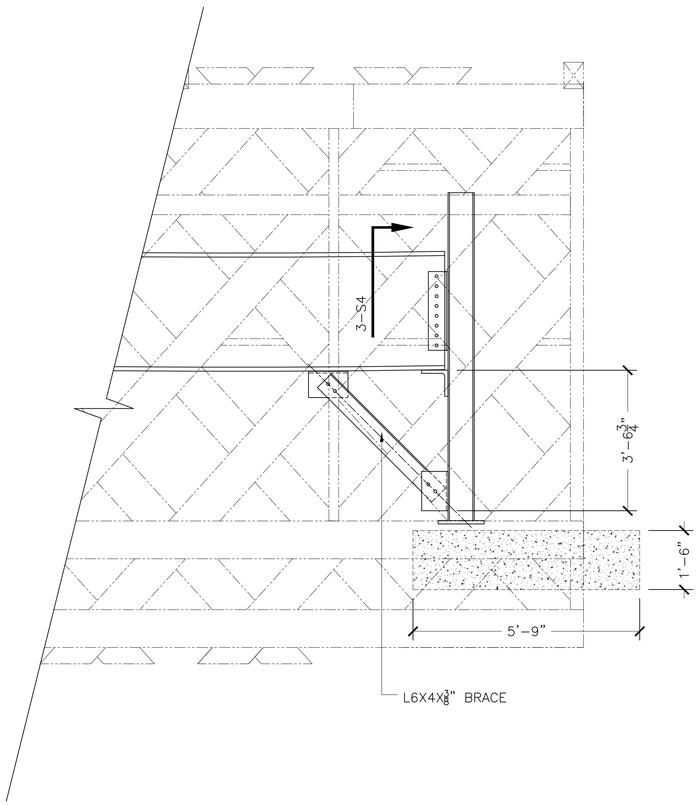

2-S4

ABUT. 2 COLUMN ELEVATION

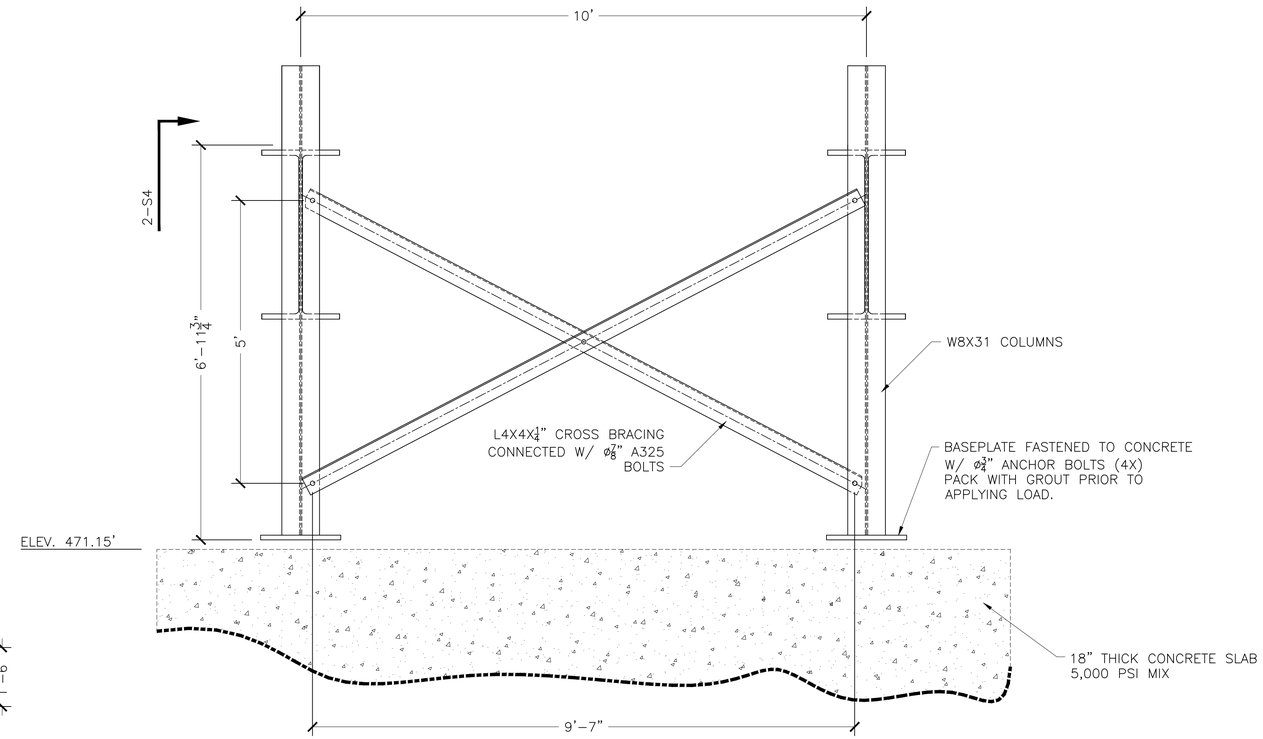

1-S4

ABUT. 2 COLUMN END VIEW

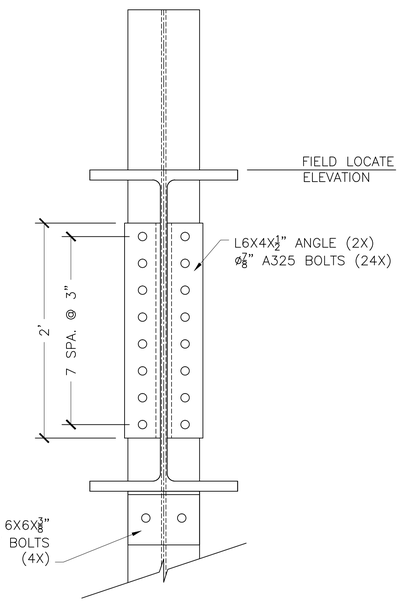

3-S4

ABUT. 2 SHEAR CONNECTION

REV. NO.	DATE:
1	11/12/15

R.B.I. RENAUD BROS. INC.
STEEL SALES & FABRICATION
VERNON VT. USA
283 FT. BRIDGMAN RD. VERNON VT., 05354
PH. (802) 257-7583 FAX (802) 257-7508

PROJECT NAME: TOWNSHEND
PROJECT NO: STP SCTT(1)
DRAWN BY: A.D.
CHK'D BY: M.R.
DATE: 10/27/15

SHEET NAME: SHORING PLANS

SHEET NO. S4 OF 10

C:\Users\Admin\Documents\Work in Progress 2015\TOWNSHEND COVERED BRIDGE\DRAWINGS\SHORING PLAN 10272015.dwg, 11/13/2015 3:40:19 PM

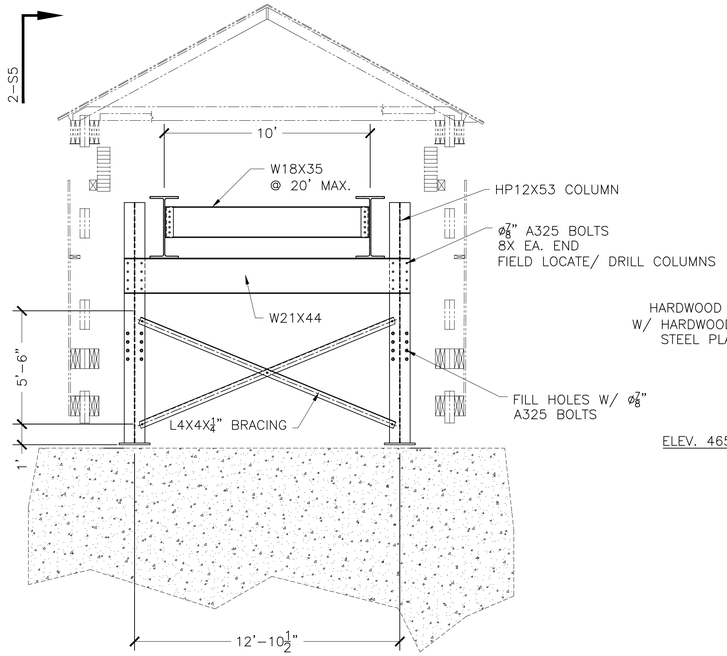

1–S5

PIER 2 COLUMN END VIEW

LIFTING CONFIGURATION

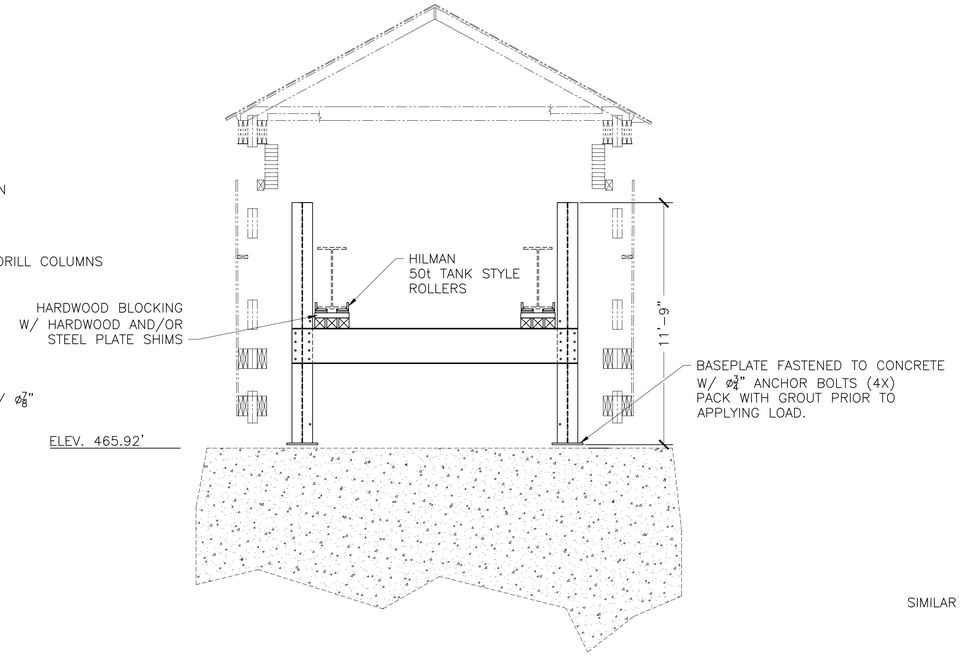

1–S5

PIER 2 COLUMN END VIEW

ROLLING CONFIGURATION

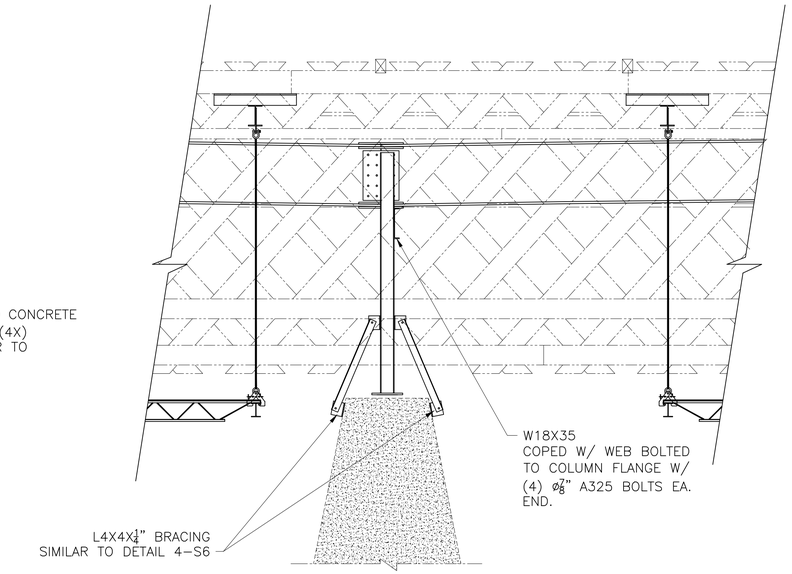

2–S5

PIER 2 LIFTING ELEVATION

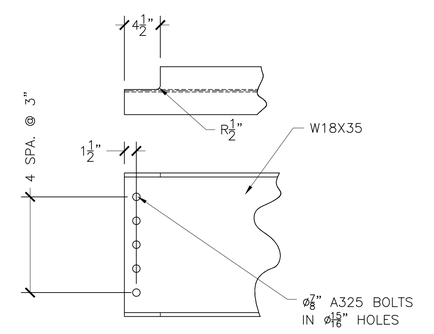

5–S5

PIER 2 SUPPORT BEAM END DETAIL

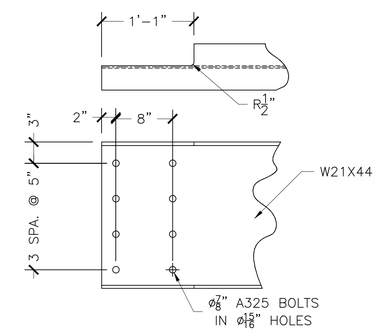

5–S6

PIER 3 SUPPORT BEAM END DETAIL

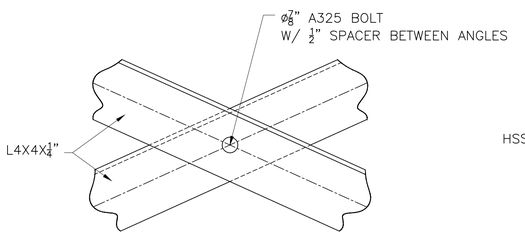

3–S5

TYP. BRACE CENTER CONN.

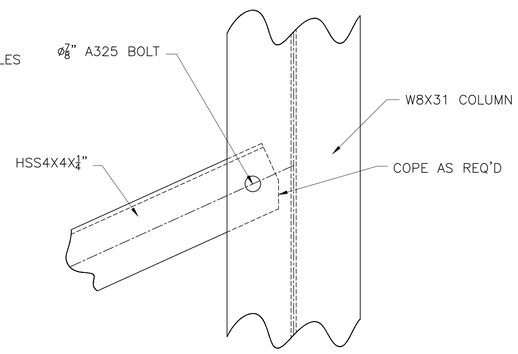

4–S5

TYP. BRACE TO COLUMN CONN.

REV. NO.	DATE:
1	11/12/15

R.I. RENAUD BROS. INC.
STEEL SALES & FABRICATION
VERNON VT. USA
283 FT. BRIDGMAN RD. VERNON VT., 05354
PH. (802) 257-7583 FAX (802) 257-7508

SHEET NAME: SHORING PLANS

PROJECT NAME: TOWNSHEND

PROJECT NO: STP SCTT(1)

DRAWN BY:	CHK'D BY:	DATE:
A.D.	M.R.	10/27/15

SHEET NO. S5 OF 10

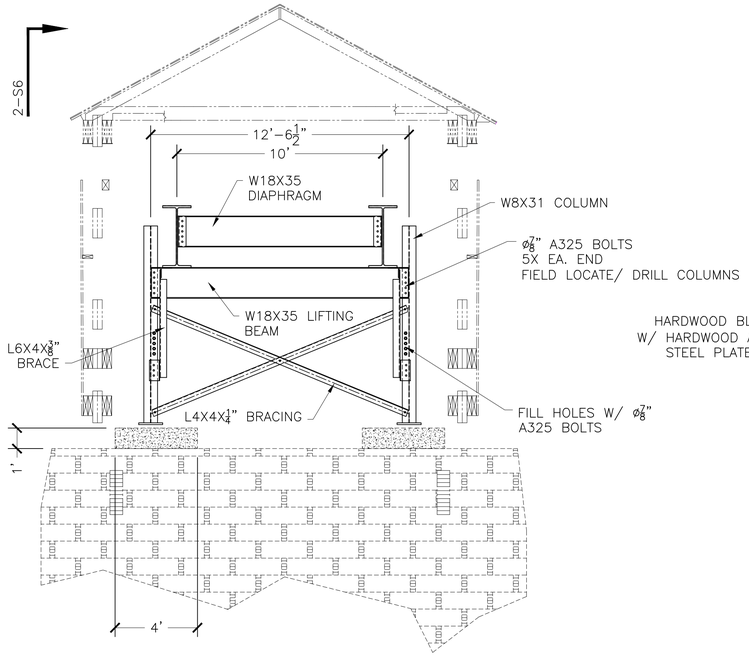

1-S6

PIER 2 COLUMN END VIEW

LIFTING CONFIGURATION

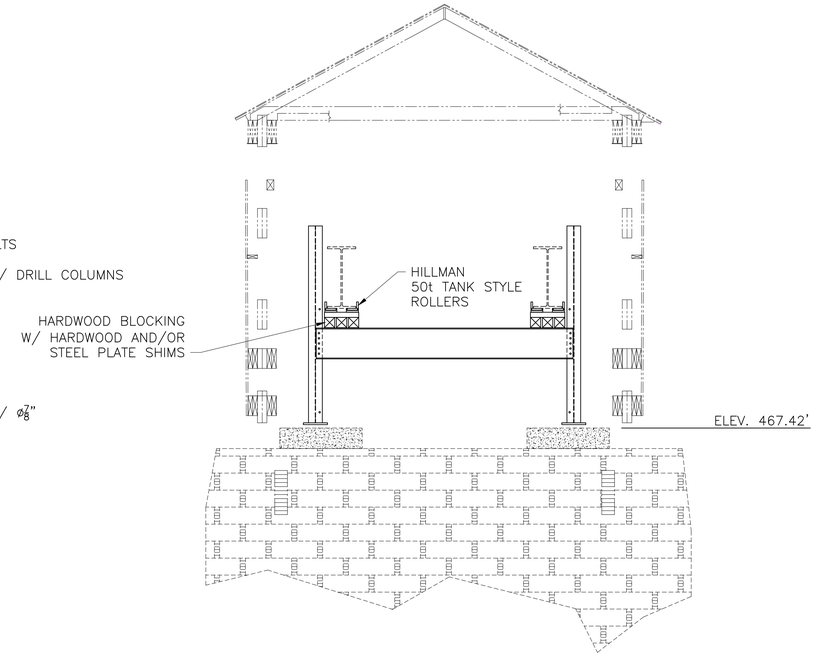

1-S6

PIER 2 COLUMN END VIEW

ROLLING CONFIGURATION

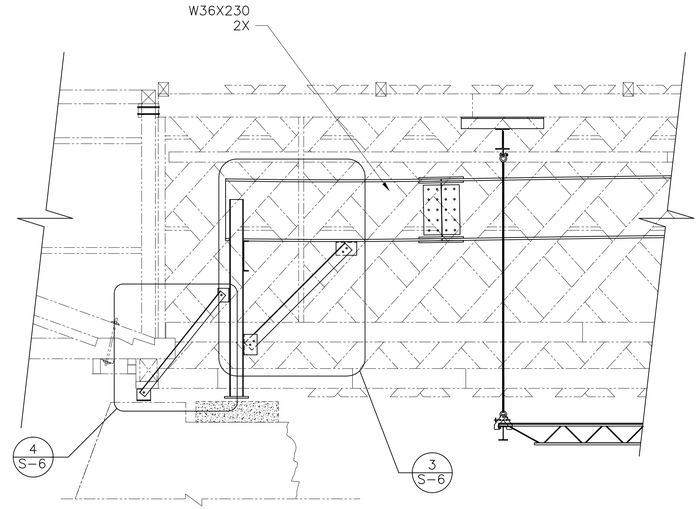

2-S6

PIER 2 LIFTING ELEVATION

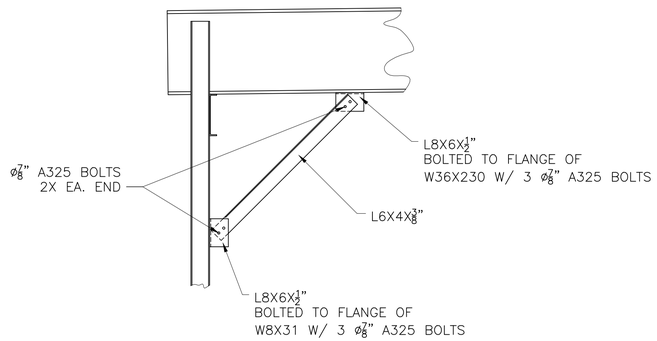

3-S6

BRACING ELEVATION

BACK BRACE REMOVED FOR CLARITY

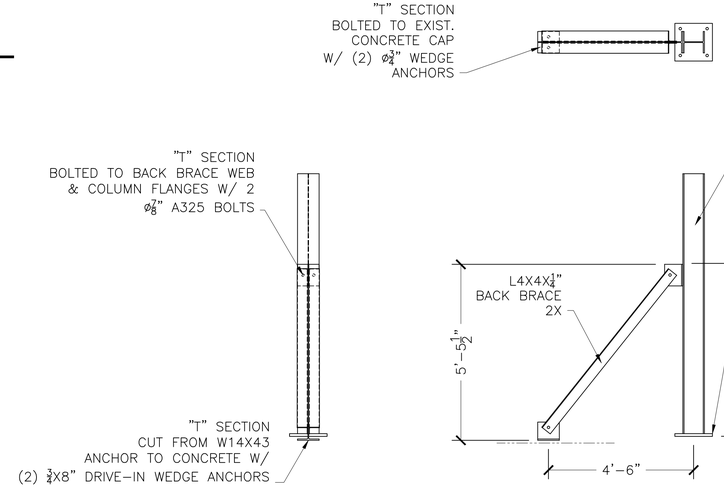

4-S6

BACK BRACE ELEVATION

CROSS BEAM & FRONT BRACE REMOVED FOR CLARITY

REV. NO.	DATE:
1	11/12/15

R.B.I. RENAUD BROS. INC.
STEEL SALES & FABRICATION
VERNON VT. USA
283 FT. BRIDGMAN RD. VERNON VT., 05354
PH. (802) 257-7583 FAX (802) 257-7508

PROJECT NAME: TOWNSHEND		SHEET NO.
PROJECT NO: STP SCTT(1)		S6 OF 10
DRAWN BY: A.D.	CHK'D BY: M.R.	DATE: 10/27/15

SHEET NAME: SHORING PLANS

C:\Users\AD-Admin\Documents\Work in Progress 2015\TOWNSHEND COVERED BRIDGE\DRAWINGS\SHORING PLAN 10272015.dwg, 11/13/2015 3:45:42 PM

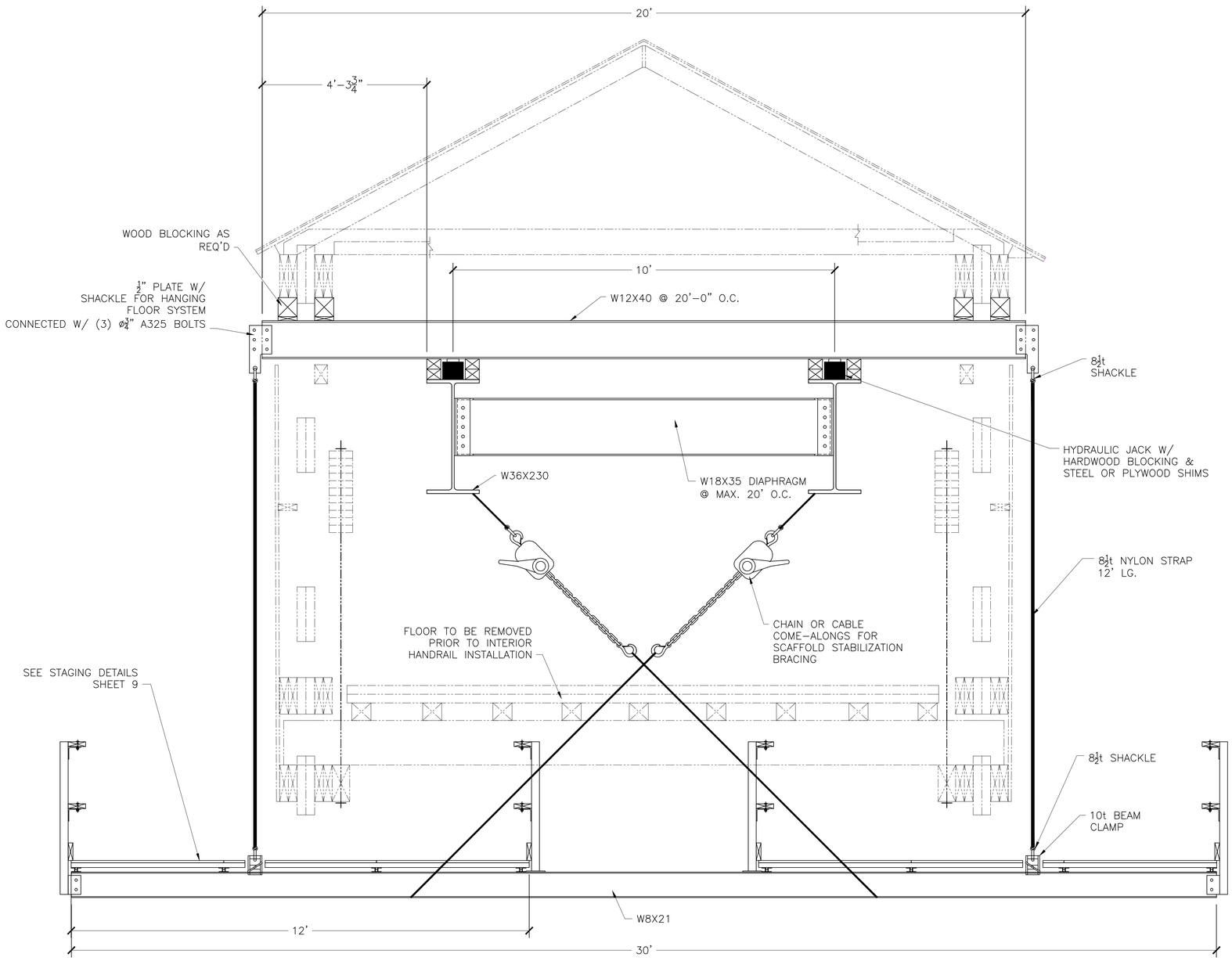

INSTALLED SHORING SECTION

**WHERE TOP CHORD IS DETERIORATED, SEE SHEET 8 FOR ALTERNATE SUPPORT PLAN.

REV. NO.	DATE:
1	11/12/15

B. R. RENAUD BROS. INC.
STEEL SALES & FABRICATION
VERNON VT., USA
283 FT. BRIDGMAN RD. VERNON VT., 05354
PH. (802) 257-7383 FAX (802) 257-7308

SHEET NAME: SHORING PLANS

PROJECT NAME: TOWNSHEND

PROJECT NO: STP SCTT(1)

DRAWN BY:	CHK'D BY:	DATE:
A.D.	M.R.	10/27/15

SHEET NO. S7 OF 10

C:\Users\Public\Documents\Works in Progress 2015\TOWNSHEND COVERED BRIDGE\DRAWINGS\SHORING PLAN 10272015.dwg, 11/13/2015 5:40:43 PM

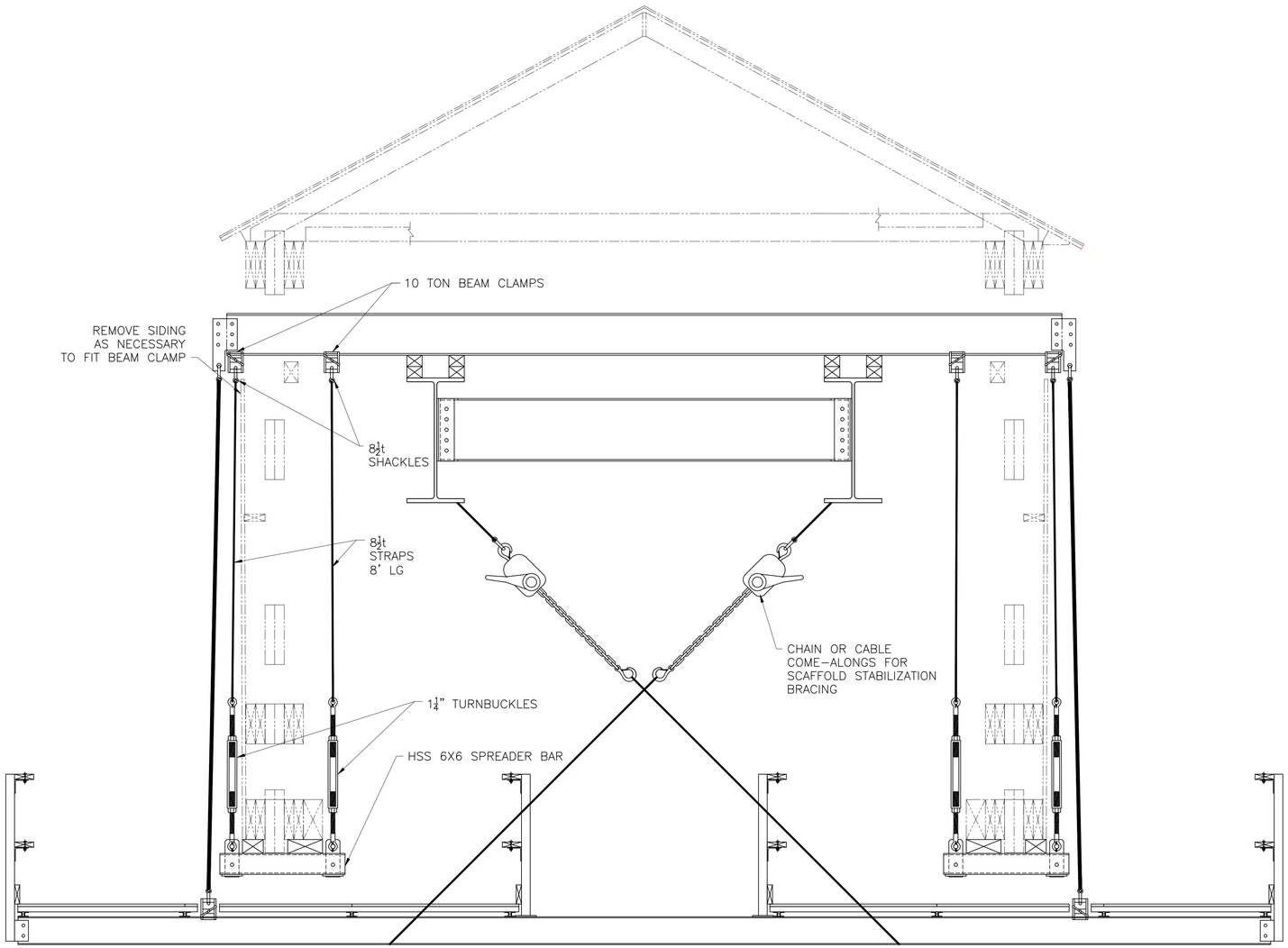

INSTALLED SHORING SECTION
@ LOCATIONS WHERE TOP CHORD IS BEING REPLACED.

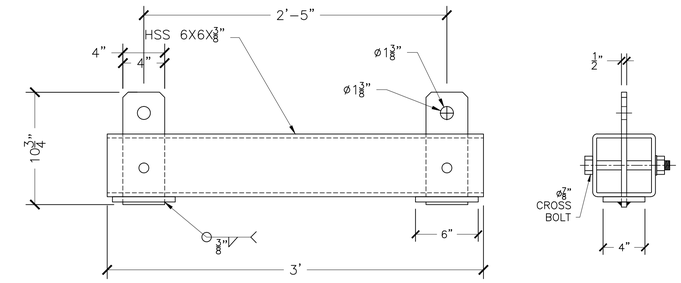

BOTTOM CHORD LIFTING SPREADER

REV. NO.	DATE:
1	11/12/15

R.B.I. RENAUD BROS. INC.
STEEL SALES & FABRICATION
VERNON VT., USA
283 FT. BRIDGMAN RD. VERNON VT., 05354
PH. (802) 257-7383 FAX (802) 257-7308

SHEET NAME: SHORING PLANS

PROJECT NAME: TOWNSHEND
PROJECT NO: STP SCTT(1)

DRAWN BY:	CHK'D BY:	DATE:
A.D.	M.R.	10/27/15

SHEET NO. S8 OF 10

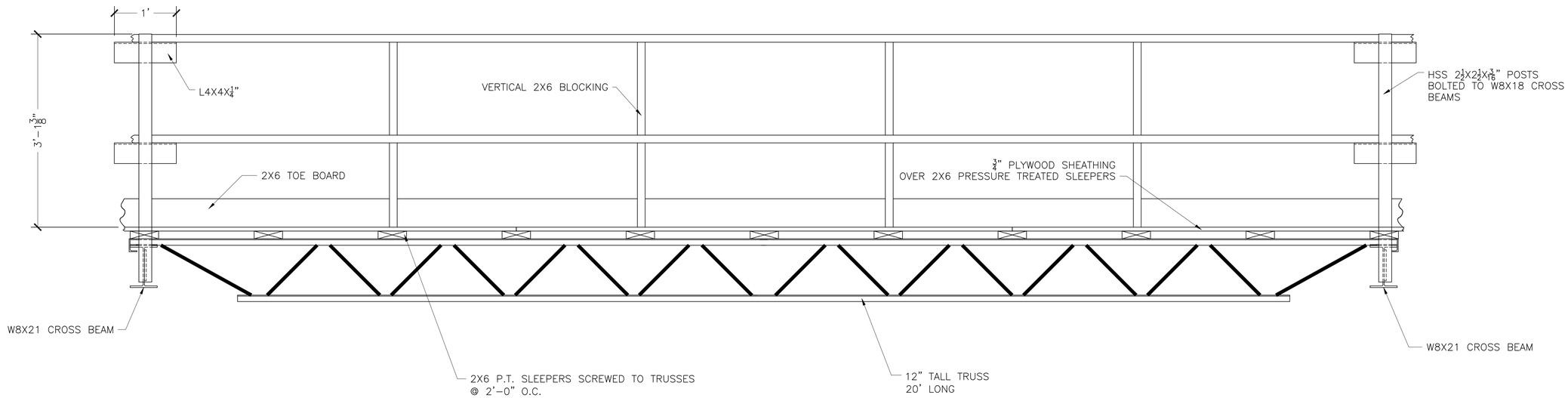

STAGING ELEVATION

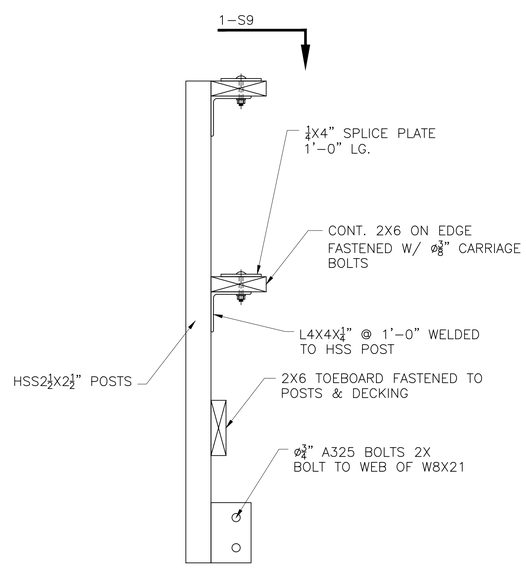

RAIL POST DETAIL

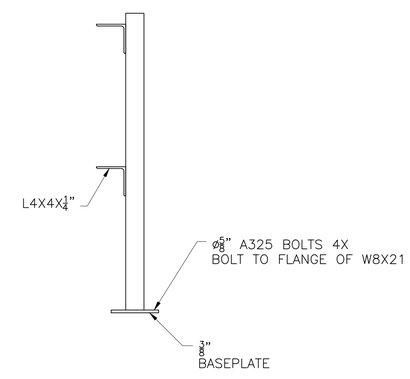

INNER RAIL POST

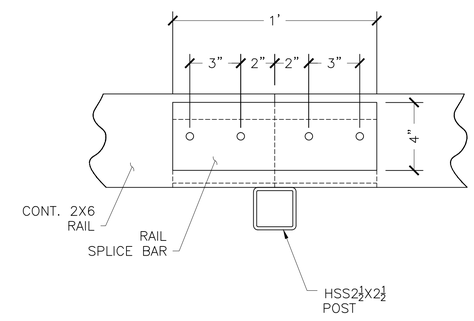

1-S9

CONT. RAIL SPLICE @ POST

SHEET NAME: SHORING PLANS

REV. NO.	DATE:
1	11/12/15

R.B. RENAUD BROS. INC.
STEEL SALES & FABRICATION
VERNON VT., USA
283 FT. BRIDGMAN RD. VERNON VT., 05354
PH. (802) 257-7383 FAX (802) 257-7308

PROJECT NAME: TOWNSHEND

PROJECT NO: STP SCTT(1)

DRAWN BY:	CHK'D BY:	DATE:
A.D.	M.R.	10/27/15

SHEET NO. S9 OF 10

C:\Users\AD\Autodesk\Document\Works in Progress 2015\TOWNSHEND COVERED BRIDGE\DRAWINGS\SHORING PLAN 10272015.dwg, 11/13/2015 3:40:46 PM

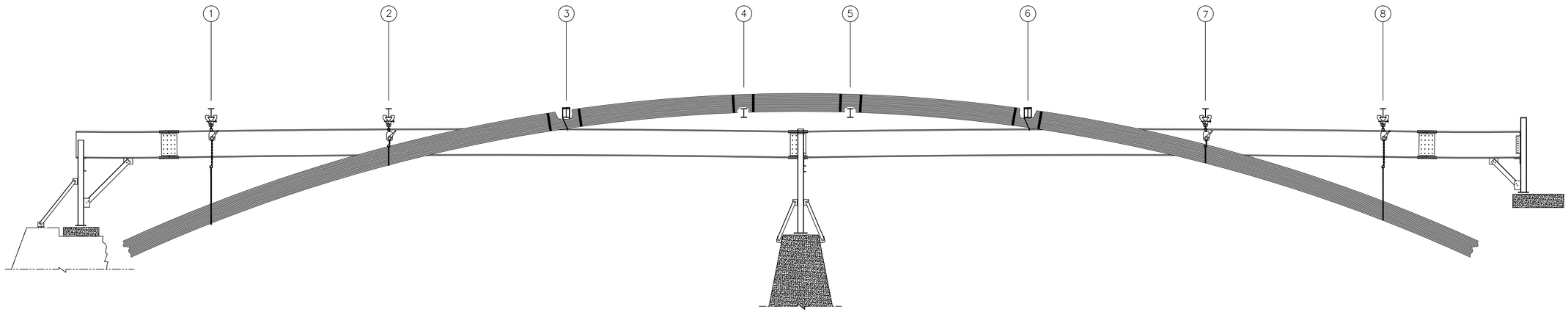

ARCH SUPPORT ELEVATION

TRUSS & SCAFFOLDING NOT SHOWN FOR CLARITY

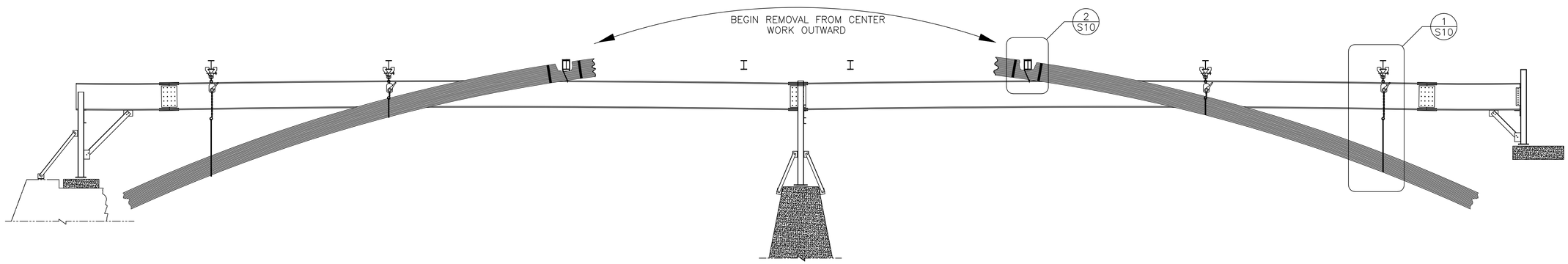

ARCH REMOVAL ELEVATION

TRUSS & SCAFFOLDING NOT SHOWN FOR CLARITY

ARCH REMOVAL SEQUENCE:

1) INSERT NEEDLE BEAMS IN PANELS: 1,2,7 & 8.

A) BLOCK AND SHIM AS NECESSARY FOR STABLE BEARING SURFACE TO BOTTOM OF TOP CHORD.

B) ATTACH HANGING SUPPORT TO ARCH AS SHOWN IN DETAIL S10–1

2) REMOVE ONLY SECTIONS OF ARCH NECESSARY TO INSTALL NEEDLE BEAMS THROUGH ARCH AT LOCATIONS 3,4,5 & 6.

A) INSERT THESE NEEDLE BEAMS 1 AT A TIME, STARTING FROM THE OUTSIDE WORKING TOWARD THE CENTER.

B) BLOCK AND SHIM AS NECESSARY FOR STABLE BEARING SURFACE TO BOTTOM OF TOP CHORD.

C) SECURE THE ARCH TO NEEDLE BEAMS USING DETAIL S10–2.

3) BEGIN REMOVING THE ARCH STARTING FROM THE CENTER. REMOVE NO MORE THAN 20' AT A TIME, ENSURING THE ARCH REMAINS SUPPORTED DURING REMOVAL.

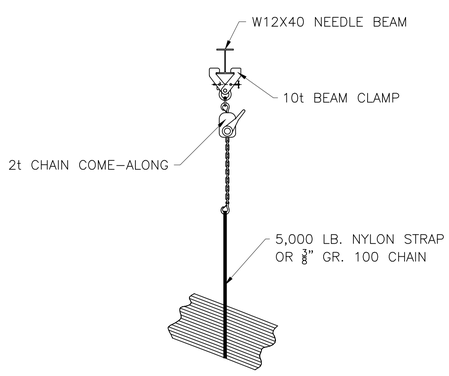

1 S10 ARCH SUPPORT; PANELS– 1,2,7 & 8

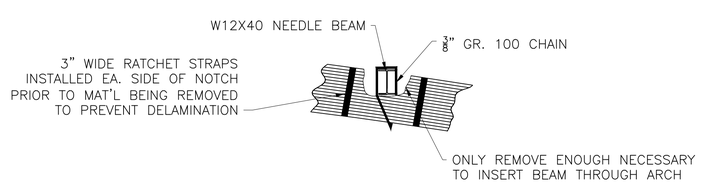

2 S10 ARCH SUPPORT; PANELS– 3,4,5 & 6

REV. NO.	DATE:
1	11/12/15

R.I.B. RENAUD BROS. INC.
STEEL SALES & FABRICATION
VERNON VT. USA
283 FT. BRIDGMAN RD. VERNON VT., 05354
PH. (802) 257-7383 FAX (802) 257-7308

PROJECT NAME: TOWNSHEND			SHEET NO. S10 OF 10
PROJECT NO: STP SCTT(1)			
DRAWN BY: A.D.	CHK'D BY: M.R.	DATE: 10/27/15	

SHEET NAME: SHORING PLANS

C:\Users\Admin\Documents\Work in Progress 2015\TOWNSHEND COVERED BRIDGE\DRAWINGS\SHORING PLAN 10272015.dwg, 11/12/2015 3:40:47 PM