BELL ENGINEERING
CIVIL & ENVIRONMENTAL
17 ECHO COVE WAY-SPOFFORD, NH 03462
(603) 363-9966

Project Title: TOWNSHEND DAM COVERED BRIDGE
Engineer: RON BELL
Project Descr: STP SCTT (1)
Project ID: 2015-055

Main Longitudinal Beam

Printed: 29 OCT 2015, 3:01PM

Steel Beam

File = C:\Users\Ron\DOCUME~1\ENERCA~1\TOWNSE~1.EC6
ENERCALC, INC. 1983-2013, Build:6.13.8.31, Ver:6.13.12.31

Lic. # : KW-06009396 Licensee : Bell Engineering

Description : W36X231 MAIN LONGITUDINAL BEAM

CODE REFERENCES

Calculations per AISC 360-05, IBC 2006, CBC 2007, ASCE 7-05
Load Combination Set : ASCE 7-05

Material Properties

Analysis Method : Load Resistance Factor Design
Beam Bracing : Beam bracing is defined as a set spacing over all spans
Bending Axis : Major Axis Bending
Load Combination ASCE 7-05

Fy : Steel Yield : 50.0 ksi
E: Modulus : 29,000.0 ksi

Unbraced Lengths

First Brace starts at ft from Left-Most support
Regular spacing of lateral supports on length of beam = 40.0 ft

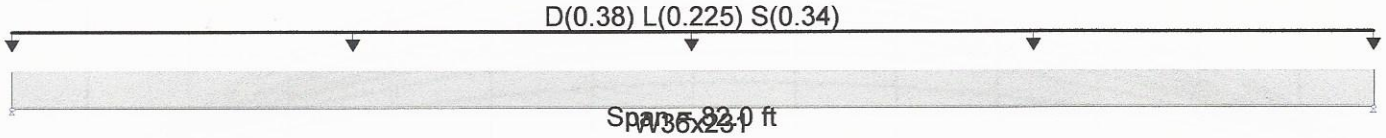

Applied Loads

Service loads entered. Load Factors will be applied for calculations.

Beam self weight calculated and added to loads
Uniform Load : D = 0.380, L = 0.2250, S = 0.340 k/ft, Tributary Width = 1.0 ft, (DEAD LOAS OF BRIDGE AND 25 PSF L)

DESIGN SUMMARY

Design OK

Maximum Bending Stress Ratio =	0.447 : 1	Maximum Shear Stress Ratio =	0.069 : 1
Section used for this span	W36x231	Section used for this span	W36x231
Mu : Applied	1,168.862 k-ft	Vu : Applied	57.018 k
Mn * Phi : Allowable	2,617.236 k-ft	Vn * Phi : Allowable	832.20 k
Load Combination	+1.20D+0.50L+1.60S	Load Combination	+1.20D+0.50L+1.60S
Location of maximum on span	41.000 ft	Location of maximum on span	0.000 ft
Span # where maximum occurs	Span # 1	Span # where maximum occurs	Span # 1

Maximum Deflection

Max Downward L+Lr+S Deflection	1.280 in	Ratio =	768
Max Upward L+Lr+S Deflection	0.000 in	Ratio =	0 <360
Max Downward Total Deflection	2.667 in	Ratio =	369
Max Upward Total Deflection	0.000 in	Ratio =	0 <240

Overall Maximum Deflections - Unfactored Loads

Load Combination	Span	Max. "-" Defl	Location in Span	Load Combination	Max. "+" Defl	Location in Span
D+L+S	1	2.6674	41.410		0.0000	0.000

Vertical Reactions - Unfactored

Support notation : Far left is #1 Values in KIPS

Load Combination	Support 1	Support 2
Overall MAXimum	48.249	48.249
D Only	25.084	25.084
L Only	9.225	9.225
S Only	13.940	13.940
L+S	23.165	23.165
D+L	34.309	34.309
D+S	39.024	39.024
D+L+S	48.249	48.249

STATE OF VERMONT
RONALD K. BELL
No. 8324
REGISTERED PROFESSIONAL ENGINEER

Ronald K. Bell

BELL ENGINEERING
CIVIL & ENVIRONMENTAL
17 ECHO COVE WAY-SPOFFORD, NH 03462
(603) 363-9966

Project Title: TOWNSHEND DAM COVERED BRIDGE
Engineer: RON BELL
Project ID: 2015-055
Project Descr: STP SCTT (1)

Main Longitudinal Beam

Printed: 29 OCT 2015, 3:01PM

Steel Beam

File = C:\Users\Ron\DOCUME~1\ENERCA~1\TOWNSE~1.EC6
ENERCALC, INC. 1983-2013, Build:6.13.8.31, Ver:6.13.12.31

Lic. # : KW-06009396 — Licensee : Bell Engineering

Description : W36X231 MAIN LONGITUDINAL BEAM

Steel Section Properties : W36x231

Depth	=	36.500	in	I xx	=	15,600.00	in^4	J	=	28.700 in^4
Web Thick	=	0.760	in	S xx		854.00	in^3	Cw	=	#####.## in^6
Flange Width	=	16.500	in	R xx	=	15.100	in			
Flange Thick	=	1.260	in	Zx	=	963.000	in^3			
Area	=	68.100	in^2	I yy	=	940.000	in^4			
Weight	=	231.812	plf	S yy	=	114.000	in^3	Wno	=	145.000 in^2
Kdesign	=	2.210	in	R yy	=	3.710	in	Sw	=	756.000 in^4
K1	=	1.563	in	Zy	=	176.000	in^3	Qf	=	175.000 in^3
rts	=	4.400	in	rT	=	4.300	in	Qw	=	476.000 in^3
Ycg	=	18.250	in							

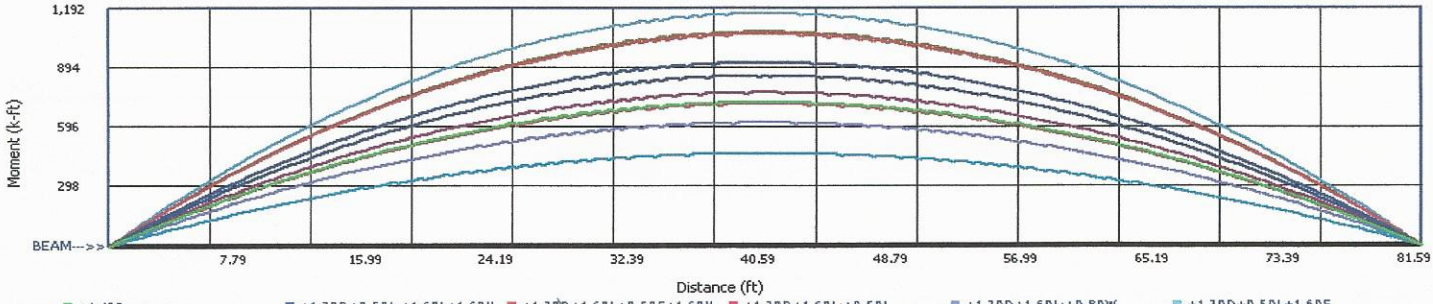

+1.4DD
+1.2DD+D.5DL+1.6DL+1.6DH
+1.2DD+1.6DL+D.5DS+1.6DH
+1.2DD+1.6DL+D.5DL
+1.2DD+1.6DL+D.8DW
+1.2DD+D.5DL+1.6DS
+1.2DD+1.6DS+D.8DW
+1.2DD+D.5DL+D.5DL+1.6DW
+1.2DD+D.5DL+D.5DS+1.6DW
+1.2DD+D.5DL+D.2DS+E
+D.9DD+1.6DW+1.6DH
+D.9DD+E+1.6DH

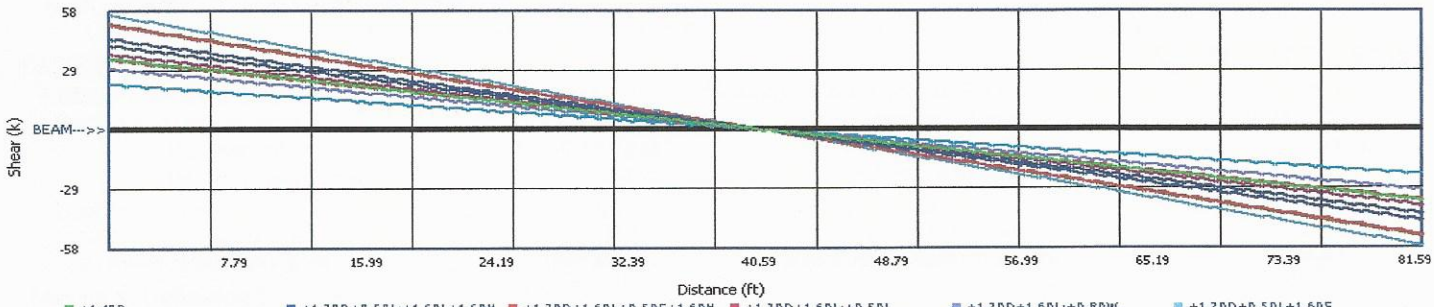

+1.4DD
+1.2DD+D.5DL+1.6DL+1.6DH
+1.2DD+1.6DL+D.5DS+1.6DH
+1.2DD+1.6DL+D.5DL
+1.2DD+1.6DL+D.8DW
+1.2DD+D.5DL+1.6DS
+1.2DD+1.6DS+D.8DW
+1.2DD+D.5DL+D.5DL+1.6DW
+1.2DD+D.5DL+D.5DS+1.6DW
+1.2DD+D.5DL+D.2DS+E
+D.9DD+1.6DW+1.6DH
+D.9DD+E+1.6DH

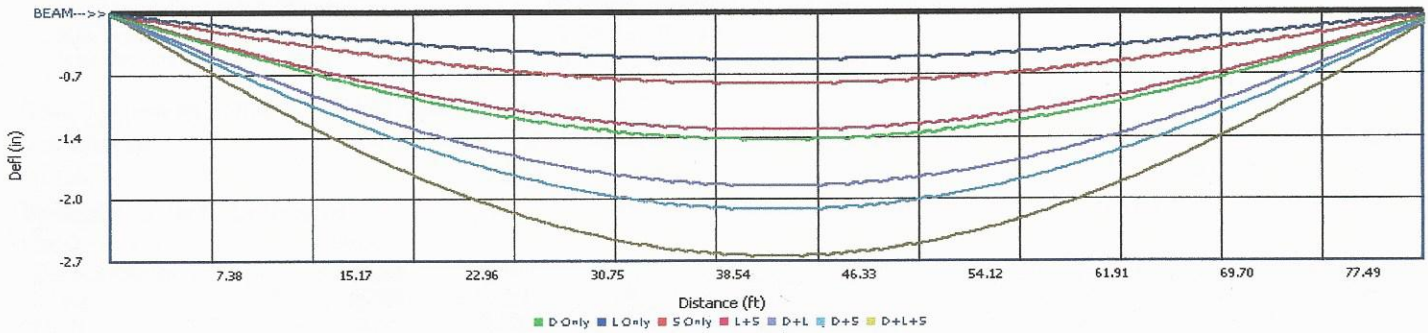

D Only L Only S Only L+S D+L D+S D+L+S

STATE OF VERMONT
RONALD K. BELL
No. 6...
REGISTERED PROFESSIONAL ENGINEER

BELL ENGINEERING
CIVIL & ENVIRONMENTAL
17 ECHO COVE WAY-SPOFFORD, NH 03462
(603) 363-9966

Project Title: TOWNSHEND DAM COVERED BRIDGE
Engineer: RON BELL
Project Descr: STP SCTT (1)
Project ID: 2015-055

W12X40 Cross Beam @ 20' o.c.

Printed: 29 OCT 2015, 3:39PM

File = C:\Users\Ron\DOCUME~1\ENERCA~1\TOWNSE~1.EC6
ENERCALC, INC. 1983-2013, Build:6.13.8.31, Ver:6.13.12.31

Steel Beam

Lic. # : KW-06009396 Licensee : Bell Engineering

Description : W12X40 CROSS BEAM @ 20' O.C. BEAM CARRYS TRUSS AND OUTSIDE STAGING

CODE REFERENCES

Calculations per AISC 360-05, IBC 2006, CBC 2007, ASCE 7-05
Load Combination Set : ASCE 7-05

Material Properties

Analysis Method : Load Resistance Factor Design
Beam Bracing : Completely Unbraced
Bending Axis : Major Axis Bending
Load Combination ASCE 7-05

Fy : Steel Yield : 50.0 ksi
E: Modulus : 29,000.0 ksi

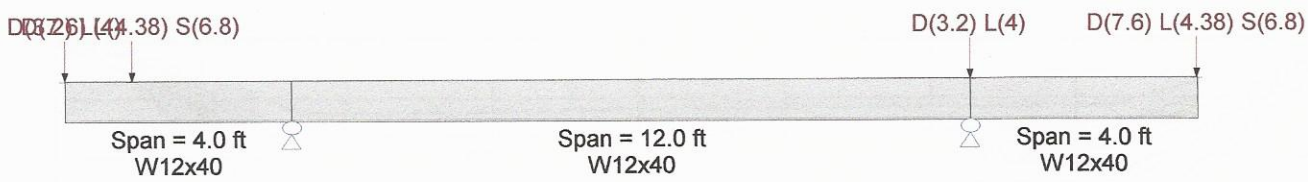

Applied Loads

Service loads entered. Load Factors will be applied for calculations.

Beam self weight calculated and added to loads
Load(s) for Span Number 1
Point Load : D = 7.60, L = 4.380, S = 6.80 k @ 1.20 ft
Point Load : D = 3.20, L = 4.0 k @ 0.0 ft
Load(s) for Span Number 3
Point Load : D = 7.60, L = 4.380, S = 6.80 k @ 4.0 ft
Point Load : D = 3.20, L = 4.0 k @ 0.0 ft

DESIGN SUMMARY

Design OK

Maximum Bending Stress Ratio = 0.476 : 1
Section used for this span W12x40
Mu : Applied 96.021 k-ft
Mn * Phi : Allowable 201.602 k-ft
Load Combination +1.20D+1.60L+0.50S+1.60H
Location of maximum on span 0.000ft
Span # where maximum occurs Span # 2

Maximum Shear Stress Ratio = 0.284 : 1
Section used for this span W12x40
Vu : Applied 29.959 k
Vn * Phi : Allowable 105.315 k
Load Combination +1.20D+1.60L+0.50S+1.60H
Location of maximum on span 4.000 ft
Span # where maximum occurs Span # 1

Maximum Deflection

Max Downward L+Lr+S Deflection	0.259 in	Ratio =	370
Max Upward L+Lr+S Deflection	-0.165 in	Ratio =	873
Max Downward Total Deflection	0.443 in	Ratio =	217
Max Upward Total Deflection	-0.279 in	Ratio =	515

Overall Maximum Deflections - Unfactored Loads

Load Combination	Span	Max. "-" Defl	Location in Span	Load Combination	Max. "+" Defl	Location in Span
D+L+S	1	0.4432	0.000		0.0000	6.076
	2	0.0000	0.000	D+L+S	-0.2795	6.076
D+L+S	3	0.4362	4.000		0.0000	6.076

Vertical Reactions - Unfactored

Support notation : Far left is #1 Values in KIPS

Load Combination	Support 1	Support 2	Support 3	Support 4
Overall MAXimum		26.900	25.856	
D Only		11.505	10.892	
L Only		9.275	7.485	
S Only		6.120	7.480	
L+S		15.395	14.965	
D+L		20.780	18.376	
D+S		17.625	18.372	
D+L+S		26.900	25.856	

STATE OF VERMONT
RONALD K. BELL
No. 6084
REGISTERED PROFESSIONAL ENGINEER

Ronald K Bell

BELL ENGINEERING
CIVIL & ENVIRONMENTAL
17 ECHO COVE WAY-SPOFFORD, NH 03462
(603) 363-9966

Project Title: TOWNSHEND DAM COVERED BRIDGE
Engineer: RON BELL
Project ID: 2015-055
Project Descr: STP SCTT (1)

Printed: 29 OCT 2015, 3:39PM

Steel Beam

File = C:\Users\Ron\DOCUME~1\ENERCA~1\TOWNSE~1.EC6
ENERCALC, INC. 1983-2013, Build:6.13.8.31, Ver:6.13.12.31

Lic. # : KW-06009396
Licensee : Bell Engineering

Description : W12X40 CROSS BEAM @ 20' O.C. BEAM CARRYS TRUSS AND OUTSIDE STAGING

Steel Section Properties : W12x40

Depth	=	11.900 in	I xx	=	307.00 in^4	J	=	0.906 in^4
Web Thick	=	0.295 in	S xx		51.50 in^3	Cw	=	1,440.00 in^6
Flange Width	=	8.010 in	R xx	=	5.130 in			
Flange Thick	=	0.515 in	Zx	=	57.000 in^3			
Area	=	11.700 in^2	I yy	=	44.100 in^4			
Weight	=	39.827 plf	S yy	=	11.000 in^3	Wno	=	22.800 in^2
Kdesign	=	1.020 in	R yy	=	1.940 in	Sw	=	23.500 in^4
K1	=	0.875 in	Zy	=	16.800 in^3	Qf	=	11.300 in^3
rts	=	2.210 in	rT	=	2.140 in	Qw	=	27.800 in^3
Ycg	=	5.950 in						

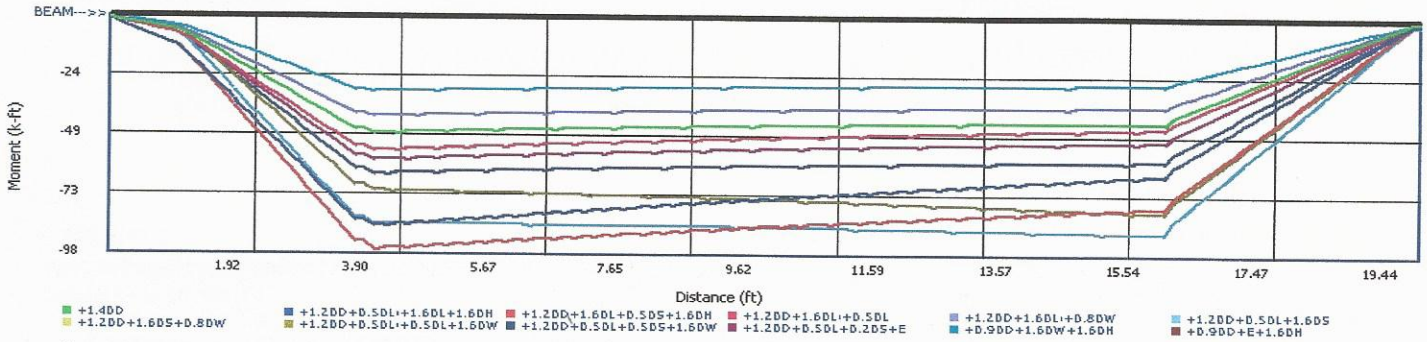

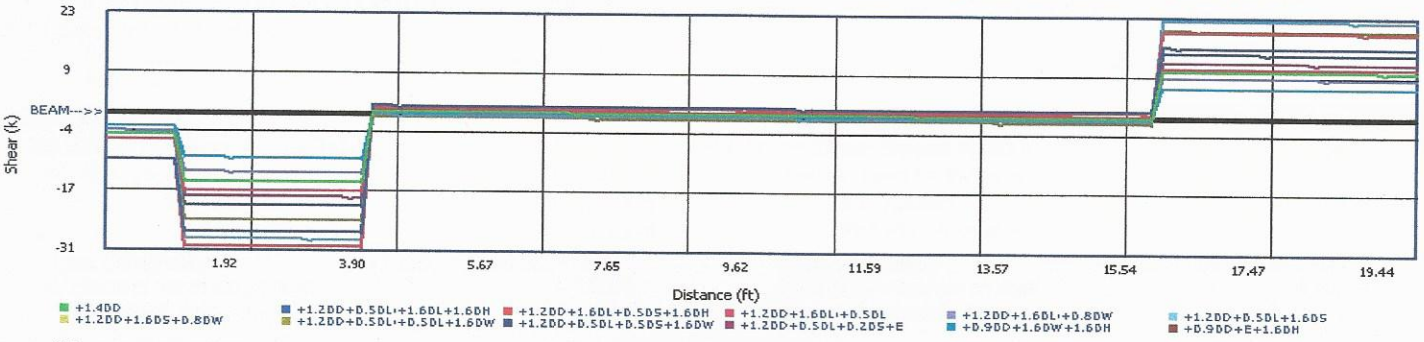

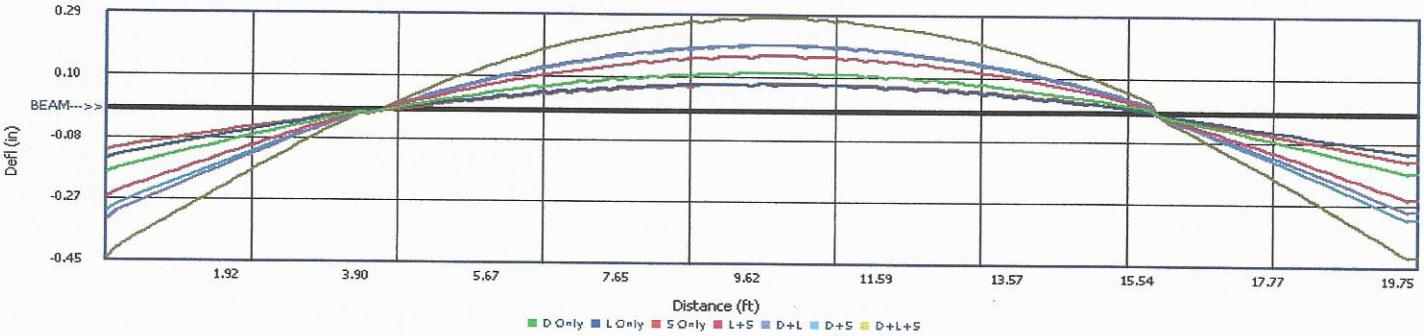

STATE OF VERMONT
RONALD K. BELL
NO. 0[illegible]
REGISTERED
PROFESSIONAL

Ronald K. Bell

BELL ENGINEERING
CIVIL & ENVIRONMENTAL
17 ECHO COVE WAY-SPOFFORD, NH 03462
(603) 363-9966

Project Title: TOWNSHEND DAM COVERED BRIDGE
Engineer: RON BELL
Project ID: 2015-055
Project Descr: STP SCTT (1)

Pier #3 Column

Printed: 29 OCT 2015, 3:01PM

Steel Column

File = C:\Users\Ron\DOCUME~1\ENERCA~1\TOWNSE~1.EC6
ENERCALC, INC. 1983-2013, Build:6.13.8.31, Ver:6.13.12.31

Lic. # : KW-06009396 Licensee : Bell Engineering

Description : PIER #3 COLUMN (WORST CASE COLUMN DUE TO HIGHER LOADS AND TALLER COLUMN)

Code References

Calculations per AISC 360-05, IBC 2006, CBC 2007, ASCE 7-05
Load Combinations Used : ASCE 7-05

General Information

Steel Section Name : W8x31
Analysis Method : Load Resistance Factor
Steel Stress Grade A-529, Carbon Steel, Fy = 50 ksi
Fy : Steel Yield 50.0 ksi
E : Elastic Bending Modulus 29,000.0 ksi
Load Combination : ASCE 7-05

Overall Column Height 12.330 ft
Top & Bottom Fixity Top Pinned, Bottom Fixed
Brace condition for deflection (buckling) along columns :
X-X (width) axis :
Unbraced Length for X-X Axis buckling = 12.33 ft, K = 0.80
Y-Y (depth) axis :
Unbraced Length for Y-Y Axis buckling = 12.33 ft, K = 0.80

Applied Loads

Service loads entered. Load Factors will be applied for calculations.

Column self weight included : 382.778 lbs * Dead Load Factor
AXIAL LOADS . . .
Axial Load at 12.330 ft, D = 35.110, L = 18.230, S = 31.820 k

DESIGN SUMMARY

Bending & Shear Check Results

PASS Max. Axial+Bending Stress Ratio = 0.3214 : 1
Load Combination +1.20D+0.50L+1.60S
Location of max.above base 0.0 ft
At maximum location values are . . .
Pu 102.618 k
0.9 * Pn 319.280 k
Mu-x 0.0 k-ft
0.9 * Mn-x : 107.529 k-ft
Mu-y 0.0 k-ft
0.9 * Mn-y : 52.791 k-ft

PASS Maximum Shear Stress Ratio = 0.0 : 1
Load Combination
Location of max.above base 0.0 ft
At maximum location values are . . .
Vu : Applied 0.0 k
Vn * Phi : Allowable 0.0 k

Maximum SERVICE Load Reactions . .
Top along X-X 0.0 k
Bottom along X-X 0.0 k
Top along Y-Y 0.0 k
Bottom along Y-Y 0.0 k

Maximum SERVICE Load Deflections . . .
Along Y-Y 0.0 in at 0.0 ft above base
for load combination :
Along X-X 0.0 in at 0.0 ft above base
for load combination :

Maximum Deflections for Load Combinations - Unfactored Loads

Load Combination	Max. X-X Deflection		Distance		Max. Y-Y Deflection		Distance	
D Only	0.0000	in	0.000	ft	0.000	in	0.000	ft
L Only	0.0000	in	0.000	ft	0.000	in	0.000	ft
S Only	0.0000	in	0.000	ft	0.000	in	0.000	ft
D+L	0.0000	in	0.000	ft	0.000	in	0.000	ft
D+S	0.0000	in	0.000	ft	0.000	in	0.000	ft
D+L+S	0.0000	in	0.000	ft	0.000	in	0.000	ft

Steel Section Properties : W8x31

STATE OF VERMONT
RONALD K. BELL
No. 6334
REGISTERED PROFESSIONAL ENGINEER

Ronald K. Bell

BELL ENGINEERING
CIVIL & ENVIRONMENTAL
17 ECHO COVE WAY-SPOFFORD, NH 03462
(603) 363-9966

Project Title: TOWNSHEND DAM COVERED BRIDGE
Engineer: RON BELL
Project ID: 2015-055
Project Descr: STP SCTT (1)

Pier #3 Column

Printed: 29 OCT 2015, 3:01PM

Steel Column

File = C:\Users\Ron\DOCUME~1\ENERCA~1\TOWNSE~1.EC6
ENERCALC, INC. 1983-2013, Build:6.13.8.31, Ver:6.13.12.31

Lic. # : KW-06009396
Licensee : Bell Engineering

Description : PIER #3 COLUMN (WORST CASE COLUMN DUE TO HIGHER LOADS AND TALLER COLUMN)

Steel Section Properties : W8x31

Depth	=	8.000	in	I xx	=	110.00	in^4	J	=	0.536 in^4
Web Thick	=	0.285	in	S xx	=	27.50	in^3	Cw	=	530.00 in^6
Flange Width	=	8.000	in	R xx	=	3.470	in			
Flange Thick	=	0.435	in	Zx	=	30.400	in^3			
Area	=	9.120	in^2	I yy	=	37.100	in^4			
Weight	=	31.044	plf	S yy	=	9.270	in^3	Wno	=	15.100 in^2
Kdesign	=	0.829	in	R yy	=	2.020	in	Sw	=	13.200 in^4
K1	=	0.750	in	Zy	=	14.100	in^3	Qf	=	6.350 in^3
rts	=	2.260	in	rT	=	2.180	in	Qw	=	15.000 in^3
Ycg	=	0.000	in							

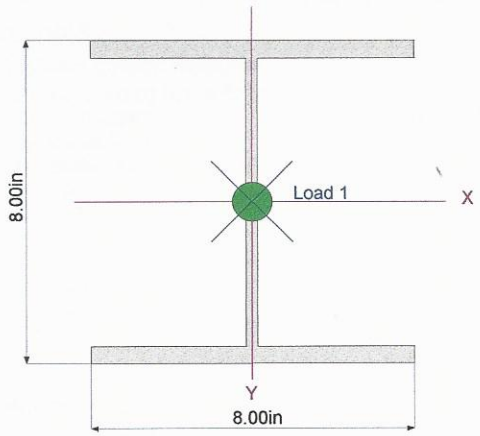

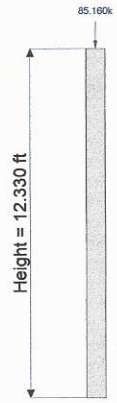

Loads are total entered value. Arrows do not reflect absolute direction.

STATE OF VERMONT
RONALD K. BELL
No. 6994
REGISTERED PROFESSIONAL ENGINEER

Ronald K Bell

BELL ENGINEERING
CIVIL & ENVIRONMENTAL
17 ECHO COVE WAY-SPOFFORD, NH 03462
(603) 363-9966

Project Title: TOWNSHEND DAM COVERED BRIDGE
Engineer: RON BELL
Project ID: 2015-055
Project Descr: STP SCTT (1)

END COLUMNS

Printed: 29 OCT 2015, 3:23PM

Steel Column

File = C:\Users\Ron\DOCUME~1\ENERCA~1\TOWNSE~1.EC6
ENERCALC, INC. 1983-2013, Build:6.13.8.31, Ver:6.13.12.31

Lic. # : KW-06009396 Licensee : Bell Engineering

Description : ABUTMENT NO 2 ROUTE 30

Code References

Calculations per AISC 360-05, IBC 2006, CBC 2007, ASCE 7-05
Load Combinations Used : ASCE 7-05

General Information

Steel Section Name : **W8x31**
Analysis Method : Load Resistance Factor
Steel Stress Grade A-529, Carbon Steel, Fy = 50 ksi
Fy : Steel Yield 50.0 ksi
E : Elastic Bending Modulus 29,000.0 ksi
Load Combination : ASCE 7-05

Overall Column Height 10.280 ft
Top & Bottom Fixity Top Pinned, Bottom Fixed
Brace condition for deflection (buckling) along columns :
X-X (width) axis :
Unbraced Length for X-X Axis buckling = 10.28 ft, K = 0.80
Y-Y (depth) axis :
Unbraced Length for Y-Y Axis buckling = 12.28 ft, K = 0.80

Applied Loads

Service loads entered. Load Factors will be applied for calculations.

Column self weight included : 319.137 lbs * Dead Load Factor
AXIAL LOADS . . .
Axial Load at 10.280 ft, Xecc = 1.000 in, Yecc = 1.000 in, D = 14.0, L = 9.10, S = 12.50 k

DESIGN SUMMARY

Bending & Shear Check Results

PASS Max. Axial+Bending Stress Ratio = 0.1558 : 1
Load Combination +1.20D+0.50L+1.60S
Location of max.above base 10.211 ft
At maximum location values are . . .
Pu 41.733 k
0.9 * Pn 344.678 k
Mu-x -3.411 k-ft
0.9 * Mn-x : 111.418 k-ft
Mu-y -3.411 k-ft
0.9 * Mn-y : 52.791 k-ft

PASS Maximum Shear Stress Ratio = 0.007351 : 1
Load Combination +1.20D+0.50L+1.60S
Location of max.above base 0.0 ft
At maximum location values are . . .
Vu : Applied 0.5028 k
Vn * Phi : Allowable 68.40 k

Maximum SERVICE Load Reactions . .
Top along X-X 0.4329 k
Bottom along X-X 0.4329 k
Top along Y-Y 0.4329 k
Bottom along Y-Y 0.4329 k

Maximum SERVICE Load Deflections . . .
Along Y-Y -0.006290 in at 6.899 ft above base
for load combination : D+L+S
Along X-X -0.01865 in at 6.899 ft above base
for load combination : D+L+S

Maximum Deflections for Load Combinations - Unfactored Loads

Load Combination	Max. X-X Deflection		Distance		Max. Y-Y Deflection		Distance	
D Only	-0.0073	in	6.899	ft	-0.002	in	6.899	ft
L Only	-0.0048	in	6.899	ft	-0.002	in	6.899	ft
S Only	-0.0065	in	6.899	ft	-0.002	in	6.899	ft
D+L	-0.0121	in	6.899	ft	-0.004	in	6.899	ft
D+S	-0.0139	in	6.899	ft	-0.005	in	6.899	ft
D+L+S	-0.0186	in	6.899	ft	-0.006	in	6.899	ft

Steel Section Properties : W8x31

STATE OF VERMONT
RONALD K. BELL
No. 0[illegible]
REGISTERED PROFESSIONAL ENGINEER

Ronald K. Bell

BELL ENGINEERING
CIVIL & ENVIRONMENTAL
17 ECHO COVE WAY-SPOFFORD, NH 03462
(603) 363-9966

Project Title: TOWNSHEND DAM COVERED BRIDGE
Engineer: RON BELL
Project ID: 2015-055
Project Descr: STP SCTT (1)

Printed: 29 OCT 2015, 3:23PM

Steel Column

File = C:\Users\Ron\DOCUME~1\ENERCA~1\TOWNSE~1.EC6
ENERCALC, INC. 1983-2013, Build:6.13.8.31, Ver:6.13.12.31

Lic. # : KW-06009396
Licensee : Bell Engineering

Description : ABUTMENT NO 2 ROUTE 30

Steel Section Properties : W8x31

Depth	=	8.000	in	I xx	=	110.00	in^4	J	=	0.536	in^4
Web Thick	=	0.285	in	S xx	=	27.50	in^3	Cw	=	530.00	in^6
Flange Width	=	8.000	in	R xx	=	3.470	in				
Flange Thick	=	0.435	in	Zx	=	30.400	in^3				
Area	=	9.120	in^2	I yy	=	37.100	in^4				
Weight	=	31.044	plf	S yy	=	9.270	in^3	Wno	=	15.100	in^2
Kdesign	=	0.829	in	R yy	=	2.020	in	Sw	=	13.200	in^4
K1	=	0.750	in	Zy	=	14.100	in^3	Qf	=	6.350	in^3
rts	=	2.260	in	rT	=	2.180	in	Qw	=	15.000	in^3
Ycg	=	0.000	in								

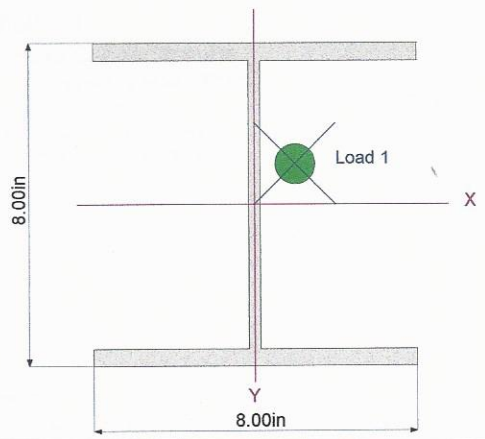

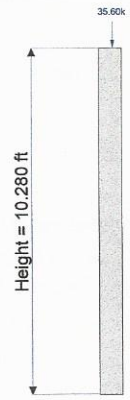

Loads are total entered value. Arrows do not reflect absolute direction.

STATE OF VERMONT
RONALD K. BELL
No. 6994
REGISTERED PROFESSIONAL ENGINEER

Ronald K. Bell

BELL ENGINEERING
CIVIL & ENVIRONMENTAL
17 ECHO COVE WAY-SPOFFORD, NH 03462
(603) 363-9966

Project Title: TOWNSHEND DAM COVERED BRIDGE
Engineer: RON BELL
Project Descr: STP SCTT (1)
Project ID: 2015-055

Longitudinal Support Beam

Printed: 29 OCT 2015, 3:28PM

Steel Beam

File = C:\Users\Ron\DOCUME~1\ENERCA~1\TOWNSE~1.EC6
ENERCALC, INC. 1983-2013, Build:6.13.8.31, Ver:6.13.12.31

Lic. # : KW-06009396 Licensee : Bell Engineering

Description : LONGITUDINAL SUPPORT CROSS BEAM W 16X40

CODE REFERENCES

Calculations per AISC 360-05, IBC 2006, CBC 2007, ASCE 7-05
Load Combination Set : ASCE 7-05

Material Properties

Analysis Method : Load Resistance Factor Design
Beam Bracing : Completely Unbraced
Bending Axis : Major Axis Bending
Load Combination ASCE 7-05

Fy : Steel Yield : 50.0 ksi
E: Modulus : 29,000.0 ksi

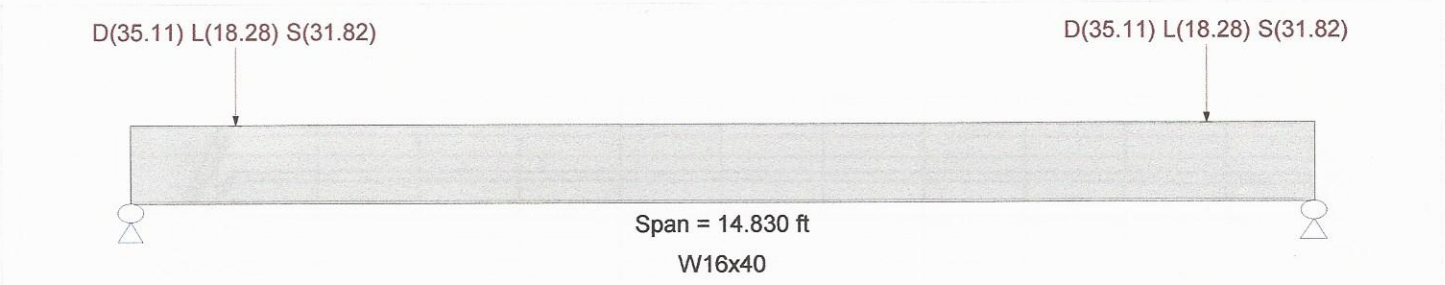

Applied Loads

Service loads entered. Load Factors will be applied for calculations.

Beam self weight calculated and added to loads
Load(s) for Span Number 1
Point Load : D = 35.110, L = 18.280, S = 31.820 k @ 1.330 ft
Point Load : D = 35.110, L = 18.280, S = 31.820 k @ 13.50 ft

DESIGN SUMMARY

Design OK

Maximum Bending Stress Ratio =	0.760 : 1	Maximum Shear Stress Ratio =	0.700 : 1
Section used for this span	W16x40	Section used for this span	W16x40
Mu : Applied	137.230 k-ft	Vu : Applied	102.541 k
Mn * Phi : Allowable	180.635 k-ft	Vn * Phi : Allowable	146.40 k
Load Combination	+1.20D+0.50L+1.60S	Load Combination	+1.20D+0.50L+1.60S
Location of maximum on span	7.415 ft	Location of maximum on span	14.830 ft
Span # where maximum occurs	Span # 1	Span # where maximum occurs	Span # 1

Maximum Deflection

Max Downward L+Lr+S Deflection	0.210 in	Ratio =	845
Max Upward L+Lr+S Deflection	0.000 in	Ratio =	0 <360
Max Downward Total Deflection	0.361 in	Ratio =	493
Max Upward Total Deflection	0.000 in	Ratio =	0 <240

Overall Maximum Deflections - Unfactored Loads

Load Combination	Span	Max. "-" Defl	Location in Span	Load Combination	Max. "+" Defl	Location in Span
D+L+S	1	0.3607	7.489		0.0000	0.000

Vertical Reactions - Unfactored

Support notation : Far left is #1 Values in KIPS

Load Combination	Support 1	Support 2
Overall MAXimum	85.508	85.508
D Only	35.408	35.408
L Only	18.280	18.280
S Only	31.820	31.820
L+S	50.100	50.100
D+L	53.688	53.688
D+S	67.228	67.228
D+L+S	85.508	85.508

STATE OF VERMONT
RONALD K. BELL
No. 6994
REGISTERED PROFESSIONAL ENGINEER

Ronald K. Bell

Table 7-1
Available Shear Strength of Bolts, kips

Nominal Bolt Diameter, d, in.					5/8		3/4		7/8		1	
Nominal Bolt Area, in.^{2}					0.307		0.442		0.601		0.785	
ASTM Desig.	Thread Cond.	F_{nv}/Ω (ksi)	ϕF_{nv} (ksi)	Loading	r_n/Ω	ϕr_n	r_n/Ω	ϕr_n	r_n/Ω	ϕr_n	r_n/Ω	ϕr_n
		ASD	LRFD		ASD	LRFD	ASD	LRFD	ASD	LRFD	ASD	LRFD
Group A	N	27.0	40.5	S	8.29	12.4	11.9	17.9	16.2	24.3	21.2	31.8
				D	16.6	24.9	23.9	35.8	32.5	48.7	42.4	63.6
	X	34.0	51.0	S	10.4	15.7	15.0	22.5	20.4	30.7	26.7	40.1
				D	20.9	31.3	30.1	45.1	40.9	61.3	53.4	80.1
Group B	N	34.0	51.0	S	10.4	15.7	15.0	22.5	20.4	30.7	26.7	40.1
				D	20.9	31.3	30.1	45.1	40.9	61.3	53.4	80.1
	X	42.0	63.0	S	12.9	19.3	18.6	27.8	25.2	37.9	33.0	49.5
				D	25.8	38.7	37.1	55.7	50.5	75.7	65.9	98.9
A307	–	13.5	20.3	S	4.14	6.23	5.97	8.97	8.11	12.2	10.6	15.9
				D	8.29	12.5	11.9	17.9	16.2	24.4	21.2	31.8

Nominal Bolt Diameter, d, in.					1 1/8		1 1/4		1 3/8		1 1/2	
Nominal Bolt Area, in.^{2}					0.994		1.23		1.48		1.77	
ASTM Desig.	Thread Cond.	F_{nv}/Ω (ksi)	ϕF_{nv} (ksi)	Loading	r_n/Ω	ϕr_n	r_n/Ω	ϕr_n	r_n/Ω	ϕr_n	r_n/Ω	ϕr_n
		ASD	LRFD		ASD	LRFD	ASD	LRFD	ASD	LRFD	ASD	LRFD
Group A	N	27.0	40.5	S	26.8	40.3	33.2	49.8	40.0	59.9	47.8	71.7
				D	53.7	80.5	66.4	99.6	79.9	120	95.6	143
	X	34.0	51.0	S	33.8	50.7	41.8	62.7	50.3	75.5	60.2	90.3
				D	67.6	101	83.6	125	101	151	120	180
Group B	N	34.0	51.0	S	33.8	50.7	41.8	62.7	50.3	75.5	60.2	90.3
				D	67.6	101	83.6	125	101	151	120	180
	X	42.0	63.0	S	41.7	62.6	51.7	77.5	62.2	93.2	74.3	111
				D	83.5	125	103	155	124	186	149	223
A307	–	13.5	20.3	S	13.4	20.2	16.6	25.0	20.0	30.0	23.9	35.9
				D	26.8	40.4	33.2	49.9	40.0	60.1	47.8	71.7

[illegible] loaded connections greater than 38 in., see AISC *Specification* Table J3.2 footnote b.

Worst case Pu @ Pier 3 = 1026.2 KIP

[illegible] kips/Bolt × 8 Bolts = 163 KIPS

OK

STATE OF VERMONT
RONALD K. BELL
No. [illegible]
REGISTERED PROFESSIONAL ENGINEER

Ronald K Bell

Web W16x40 = .305"

102 Kips/inch

102 x .305 = 31.14 Kips

Hole OK

Table 7-4
Available Bearing Strength at Bolt Holes Based on Bolt Spacing
kips/in. thickness

Hole Type	Bolt Spacing, s, in.	F_u, ksi	Nominal Bolt Diameter, d, in.							
			5/8		3/4		7/8		1	
			r_n/Ω	ϕr_n	r_n/Ω	ϕr_n	r_n/Ω	ϕr_n	r_n/Ω	ϕ
			ASD	LRFD	ASD	LRFD	ASD	LRFD	ASD	LR
STD SSLT	$2^2/_3\ d_b$	58	34.1	51.1	41.3	62.0	48.6	72.9	55.8	83
		65	38.2	57.3	46.3	69.5	54.4	81.7	62.6	93
	3 in.	58	43.5	65.3	52.2	78.3	60.9	91.4	67.4	101
		65	48.8	73.1	58.5	87.8	68.3	102	75.6	113
SSLP	$2^2/_3\ d_b$	58	27.6	41.3	34.8	52.2	42.1	63.1	47.1	70
		65	30.9	46.3	39.0	58.5	47.1	70.7	52.8	79
	3 in.	58	43.5	65.3	52.2	78.3	60.9	91.4	58.7	88
		65	48.8	73.1	58.5	87.8	68.3	102	65.8	98
OVS	$2^2/_3\ d_b$	58	29.7	44.6	37.0	55.5	44.2	66.3	49.3	74
		65	33.3	50.0	41.4	62.2	49.6	74.3	55.3	82
	3 in.	58	43.5	65.3	52.2	78.3	60.9	91.4	60.9	91
		65	48.8	73.1	58.5	87.8	68.3	102	68.3	102
LSLP	$2^2/_3\ d_b$	58	3.62	5.44	4.35	6.53	5.08	7.61	5.80	8
		65	4.06	6.09	4.88	7.31	5.69	8.53	6.50	9
	3 in.	58	43.5	65.3	39.2	58.7	28.3	42.4	17.4	26
		65	48.8	73.1	43.9	65.8	31.7	47.5	19.5	29
LSLT	$2^2/_3\ d_b$	58	28.4	42.6	34.4	51.7	40.5	60.7	46.5	69
		65	31.8	47.7	38.6	57.9	45.4	68.0	52.1	78
	3 in.	58	36.3	54.4	43.5	65.3	50.8	76.1	56.2	84
		65	40.6	60.9	48.8	73.1	56.9	85.3	63.0	94
STD, SSLT, SSLP, OVS, LSLP	$s \geq s_{full}$	58	43.5	65.3	52.2	78.3	60.9	91.4	69.6	104
		65	48.8	73.1	58.5	87.8	68.3	102	78.0	117
LSLT	$s \geq s_{full}$	58	36.3	54.4	43.5	65.3	50.8	76.1	58.0	87
		65	40.6	60.9	48.8	73.1	56.9	85.3	65.0	97
Spacing for full bearing strength s_{full}[a], in.		STD, SSLT, LSLT	$1^{15}/_{16}$		$2^5/_{16}$		$2^{11}/_{16}$		$3^1/_{16}$	
		OVS	$2^1/_{16}$		$2^7/_{16}$		$2^{13}/_{16}$		$3^1/_4$	
		SSLP	$2^1/_8$		$2^1/_2$		$2^7/_8$		$3^5/_{16}$	
		LSLP	$2^{13}/_{16}$		$3^3/_8$		$3^{15}/_{16}$		$4^1/_2$	
Minimum Spacing[a] = $2^2/_3 d$, in.			$1^{11}/_{16}$		2		$2^5/_{16}$		$2^{11}/_{16}$	

STD = standard hole
SSLT = short-slotted hole oriented transverse to the line of force
SSLP = short-slotted hole oriented parallel to the line of force
OVS = oversized hole
LSLP = long-slotted hole oriented parallel to the line of force
LSLT = long-slotted hole oriented transverse to the line of force

ASD	LRFD
$\Omega = 2.00$	$\phi = 0.75$

Note: Spacing indicated is from the center of the hole or slot to the center of the adjacent hole or slot in the line of force. Hole deformation is considered. When hole deformation is not considered, see AISC *Specification* Section J3.10.

[a] Decimal value has been rounded to the nearest sixteenth of an inch.

Group A Bolts

Table 7-3
Slip-Critical Connections
Available Shear Strength, kips
(Class A Faying Surface, μ = 0.30)

Hole Type	Loading	Group A Bolts							
		Nominal Bolt Diameter, *d*, in.							
		5/8		3/4		7/8		1	
		Minimum Group A Bolt Pretension, kips							
		19		28		39		51	
		r_n/Ω	ϕr_n	r_n/Ω	ϕr_n	r_n/Ω	ϕr_n	r_n/Ω	ϕr_n
		ASD	LRFD	ASD	LRFD	ASD	LRFD	ASD	LRFD
STD/SSLT	S	4.29	6.44	6.33	9.49	8.81	13.2	11.5	17.3
	D	8.59	12.9	12.7	19.0	17.6	26.4	23.1	34.6
OVS/SSLP	S	3.66	5.47	5.39	8.07	7.51	11.2	9.82	14.7
	D	7.32	10.9	10.8	16.1	15.0	22.5	19.6	29.4
LSL	S	3.01	4.51	4.44	6.64	6.18	9.25	8.08	12.1
	D	6.02	9.02	8.87	13.3	12.4	18.5	16.2	24.3

Hole Type	Loading	Nominal Bolt Diameter, *d*, in.							
		1 1/8		1 1/4		1 3/8		1 1/2	
		Minimum Group A Bolt Pretension, kips							
		56		71		85		103	
		r_n/Ω	ϕr_n	r_n/Ω	ϕr_n	r_n/Ω	ϕr_n	r_n/Ω	ϕr_n
		ASD	LRFD	ASD	LRFD	ASD	LRFD	ASD	LRFD
STD/SSLT	S	12.7	19.0	16.0	24.1	19.2	28.8	23.3	34.9
	D	25.3	38.0	32.1	48.1	38.4	57.6	46.6	69.9
OVS/SSLP	S	10.8	16.1	13.7	20.5	16.4	24.5	19.8	29.7
	D	21.6	32.3	27.4	40.9	32.7	49.0	39.7	59.5
LSL	S	8.87	13.3	11.2	16.8	13.5	20.2	16.3	24.4
	D	17.7	26.6	22.5	33.7	26.9	40.3	32.6	48.9

S = single shear
D = double shear

STD = standard hole
OVS = oversized hole
SSLT = short-slotted hole transverse to the line of force
SSLP = short-slotted hole parallel to the line of force
LSL = long-slotted hole transverse or parallel to the line of force

Hole Type	ASD	LRFD
STD and SSLT	$\Omega = 1.50$	$\phi = 1.00$
OVS and SSLP	$\Omega = 1.76$	$\phi = 0.85$
LSL	$\Omega = 2.14$	$\phi = 0.70$

Note: Slip-critical bolt values assume no more than one filler has been p
or bolts have been added to distribute loads in the fillers.
See AISC *Specification* Sections J3.8 and J5 for provisions when fillers
are present.
For Class B faying surfaces, multiply the tabulated available strength by