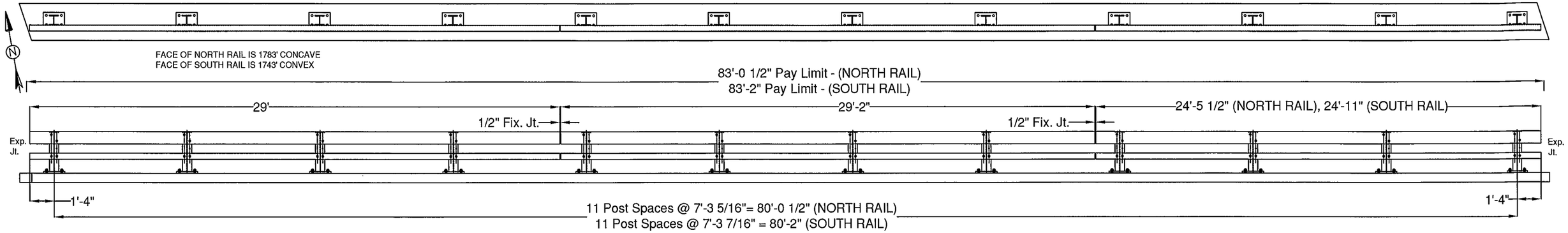

North Railing Facing North
(South Railing Facing South is Similar)

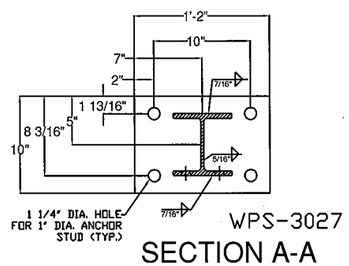

WPS-3027

SECTION A-A

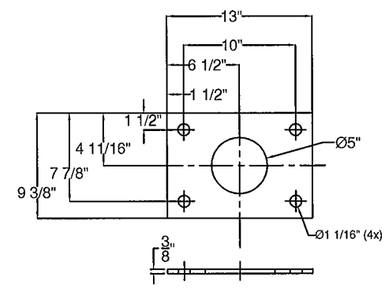

ANCHOR PLATE

SECTION B-B

BILL OF MATERIAL			
QTY	PART #	DESCRIPTION	ASTM DESIGNATION
24	0033.90344	TWO RAIL POST @ 2'-2 3/8" O.A.	A572 Gr. 50
2	0033.91094	4" X 4" X 1/4" RAIL @ 29'-0"	A500 Gr. B
2	0033.91095	4" X 4" X 1/4" RAIL @ 29'-2"	A500 Gr. B
1	0033.91096	4" X 4" X 1/4" RAIL @ 24'-5 1/2" (NORTH RAIL)	A500 Gr. B
1	0033.91097	4" X 4" X 1/4" RAIL @ 24'-7" (SOUTH RAIL)	A500 Gr. B
2	0033.91098	4" X 8" X 5/16" RAIL @ 29'-0"	A500 Gr. B
2	0033.91099	4" X 8" X 5/16" RAIL @ 29'-2"	A500 Gr. B
1	0033.91106	4" X 8" X 5/16" RAIL @ 24'-5 1/2" (NORTH RAIL)	A500 Gr. B
1	0033.91107	4" X 8" X 5/16" RAIL @ 24'-7" (SOUTH RAIL)	A500 Gr. B
4	0033.90052	3" X 3" X 5/16" FIX. SPL. TUBE @ 1'-8"	A500 Gr. B
4	0033.90033	3" X 7" X 3/8" FIX. SPL. TUBE @ 1'-8"	A500 Gr. B
24	0033.00299	3/8" X 9 3/8" X 13" ANCHOR PLATES	A36
24	0033.00052	1/8" FIBER PAD @ 10" X 14" (S-360A)	AASHTO M251
96	0042.21012	ø 1" X 12" ANCHOR STUDS W/ 2 1/2" THREADED ENDS	A449 Gr. 1
192	0080.18901	ø 1" HEAVY HEX NUTS	A563
96	0080.18905	ø 1" HEX JAM NUTS	A325
96	0080.18911	ø 1" FLAT WASHERS	F436
96	0080.06290	ø 3/4" X 6" ROUND HEAD BOLT, NUT, FLAT WASHER, L.W.	A449, A563, ASME B18.21.1
32	0080.05045	ø 5/8" X 1 3/4" HEX BOLT, & F.W.	A307
6	-	ALUMINUM DELINEATERS	SUPPLIED BY FRL

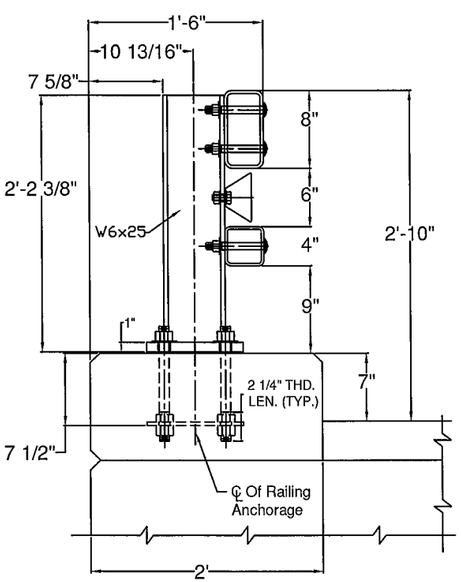

Typical Post Section

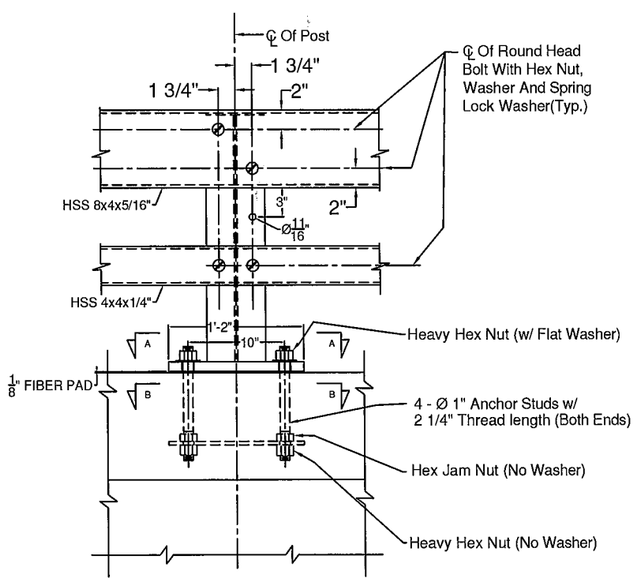

Typical Post Elevation

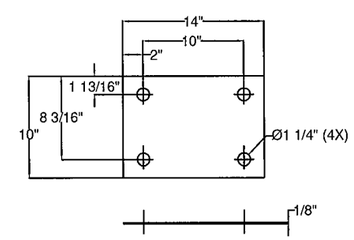

1/8" PREFORMED BEARING PAD

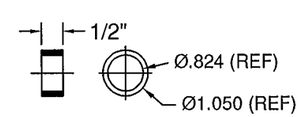

3/4" SCH. 40 PIPE SPACER

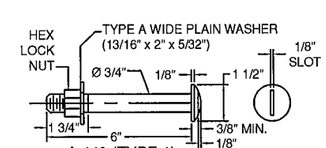

A 449 (TYPE 1)
ROUND HEAD BOLT

NOTES
1. ALL WORK AND MATERIALS SHALL CONFORM TO SECTION 525.
2. PRIOR TO GALVANIZING THE ASSEMBLED POST, GRIND ALL EDGES TO A MINIMUM RADIUS OF 1/16".
3. ALL POSTS SHALL BE SET NORMAL TO GRADE.
4. SECTIONS OF RAIL TUBE SHALL BE ATTACHED TO A MINIMUM OF TWO BRIDGE RAIL POSTS AND PREFERABLY TO AT LEAST FOUR POSTS.
5. RAIL TUBE EXPANSION JOINTS SHALL PROVIDED IN ANY RAIL BAY SPANNING THE END OF AN INTEGRAL ABUTMENT BRIDGE AND AT ALL SUPERSTRUCTURE EXPANSION JOINTS. EXPANSION JOINT WIDTH SHALL BE 4" AT 45°F AND WILL BE ADJUSTED IN THE FIELD BY THE ENGINEER FOR OTHER TEMPERATURES.
6. HOLES IN RAILS FOR RAIL TUBE ATTACHMENT WILL BE FIELD-DRILLED. HOLES SHALL BE COATED WITH AN APPROVED ZINC-RICH PAINT PRIOR TO INSTALLATION.
7. RAIL POST ANCHORING NUTS SHALL BE TIGHTENED TO A SNUG FIT AND GIVEN AN ADDITIONAL ONE-EIGHTH TURN.
8. RAIL TUBES SHALL BE ATTACHED USING 3/4" FULL DIAMETER BODY ASTM A 449 (TYPE I) ROUND HEAD BOLTS INSERTED THROUGH THE RACE OF THE TUBE. HOLES IN POSTS SHALL BE 1/16" LARGER THAN THE BOLT SIZE:
9. ANY BENDING OF RAIL SHALL BE DONE AT A FABRICATION PLANT ACCORDING TO A PROCEDURE PROVIDED BY THE FABRICATOR.
10. THE MINIMUM DISTANCE FROM THE POST TO AN EXPANSION JOINT SHALL BE DETERMINED BY THE MINIMUM EDGE DISTANCE OF 5" FROM ANY ANCHOR STUD TO THE END OF THE SLAB, OR TO THE EXPANSION JOINT RECESS POUR, IF ONE IS USED.
11. SEE STANDARD DRAWING G-I FOR DETAILS OF DELINEATORS. A DELINEATOR SHALL BE INSTALLED AT 30 FOOT SPACING OR THE NEAREST POST. WHITE IS TO BE INSTALLED ON THE DRIVER'S RIGHT. FOR ONE WAY BRIDGES, YELLOW IS TO BE INSTALLED ON THE DRIVER'S LEFT. PAYMENT SHALL BE INCIDENTAL TO OTHER ITEMS.
12. THIS RAILING MEETS THE REQUIREMENTS FOR A TL-4 SERVICE LEVEL.

ITEM #: 525.335 GEN CONTR: F.R. LAFAYETTE, P.O. 28718

SHEET 1 OF 2

APPROVED BY:

BRIDGE RAIL DETAILS SHEET

PROJECT: MARLBORO BRF 010-1 (43) VT 9 PRINCIPAL ARTERIAL-NHS, BRIDGE NO. 48
TOWN OF MARLBORO, WINDHAM COUNTY, VERMONT

REV	NO.	DATE	DESCRIPTION	BY
	1	5/26/14	REVISED PER 5/21/14 CHANGES	E.P.

REV	NO.	DATE	DESCRIPTION	BY

ELDERLEE, INC.
OAKS CORNERS, NEW YORK 14518
E-Mail: dlong@elderlee.com
Tel: 315-789-6670 Fax: 315-789-6615

AISC CERTIFIED FABRICATOR

DRAWN	E.P.	4/7/14
CHECKED	D.L.	4/7/14
APPROVED	.	.
SCALE	SCHEMATIC	
DRAWING NO.	F.R.L. MARLBORO 28718	

FIXED SPLICE TUBE DETAIL

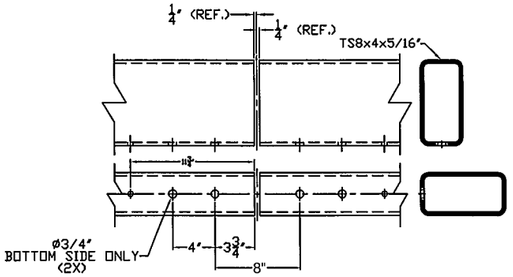

FIXED SPLICE TUBE DETAIL

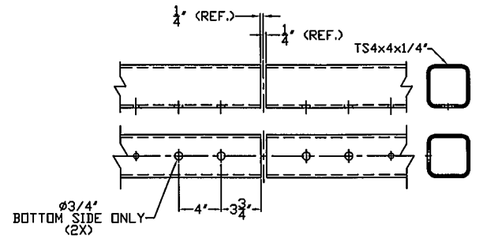

SPLICE FOR: TS8x4x5/16"

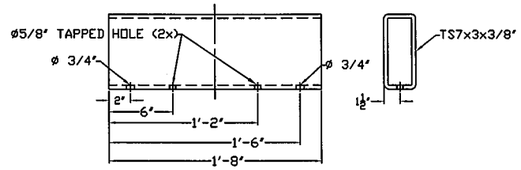

SPLICE FOR: TS4x4x1/4"

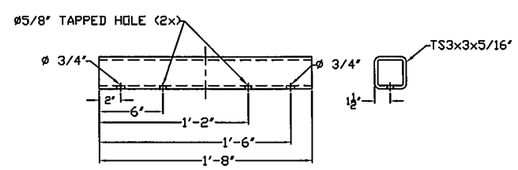

FIXED SPLICE ASS'Y

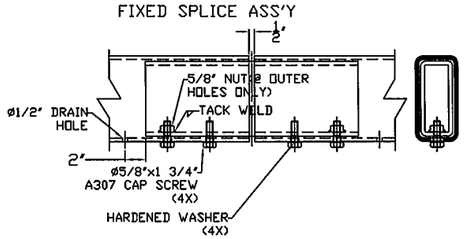

FIXED SPLICE ASS'Y

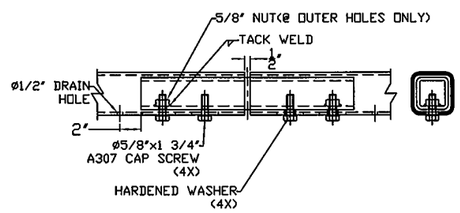

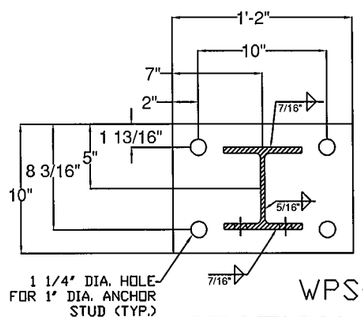

WPS-3027

SECTION A-A

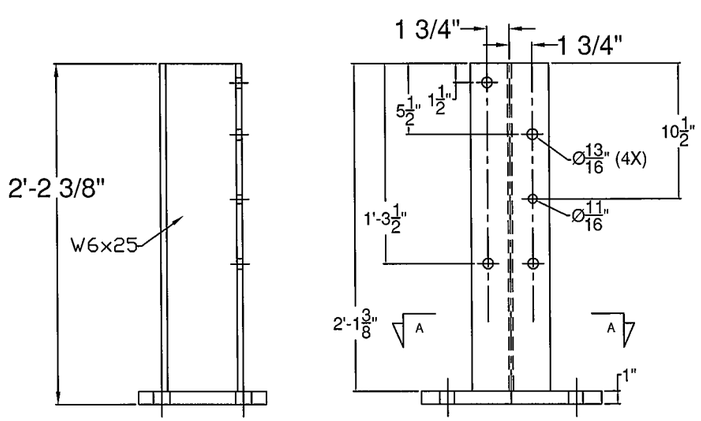

ITEM #: 525.335 GEN CONTR: F.R. LAFAYETTE, P.O. 28718

SHEET 2 OF 2

APPROVED BY:

BRIDGE RAIL DETAILS SHEET

PROJECT: MARLBORO BRF 010-1 (43) VT 9 PRINCIPAL ARTERIAL-NHS, BRIDGE NO. 48
TOWN OF MARLBORO, WINDHAM COUNTY, VERMONT

REV	NO.	DATE	DESCRIPTION	BY	REV	NO.	DATE	DESCRIPTION	BY
	1	5/26/14	REVISED PER 5/21/14 CHANGES	E.P.					

ELDERLEE, INC.
OAKS CORNERS, NEW YORK 14518
E-Mail: dlong@elderlee.com
Tel: 315-789-6670 Fax: 315-789-6615

CERTIFIED FABRICATOR

DRAWN	E.P.	4/7/14
CHECKED	D.L.	4/7/14
APPROVED	.	.
SCALE	SCHEMATIC	
DRAWING NO.	F.R.L. MARLBORO 28718	

WELDING PROCEDURE SPECIFICATION

PQR ELDERLEE#1

Material Specification	A572 GRD. 50 /A992-06a
Welding Process	FCAW
Manual or Machine	SEMAUTOMATIC
Position of Welding	FLAT/HORIZONTAL
Filler Metal Specification	A5.20
Filler Metal Classification	E70 LINCOLN OUTERSHEILD
Flux	N/A
Shielding Gas	CO 2 Dew Point -40DEG F Flow Rate 50 CFM (45 TO 63 CFM)
Single or Multiple Pass	SINGLE
Single or Multiple Arc	N/A
Welding Current	DC
Polarity	DCEP
Welding Progression	STRINGER
Root Treatment	PER D1.5
Preheat and Interpass Temperature	PER D1.5
Postheat Temperature	NONE
Heat Input	Min _____ Max _____

WELDING PROCEDURE

Pass no.	Electrode size	Welding Current Amperes	Welding Current Volts	Travel speed	Joint detail
1	3/32	390	27	12	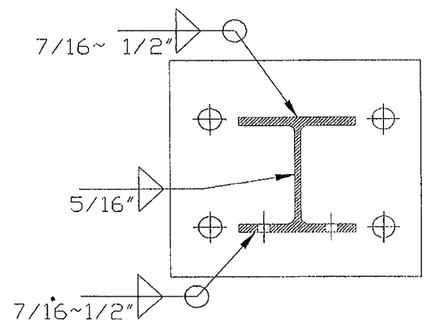
Variable	LIMITS	351 TO 429	25 TO 29	11 TO 13	

This procedure may vary due to fabrication sequence, fit-up, pass size, etc., within the limitation of variables given in Section 5.

Procedure No.	3027	Contractor	Elderlee, Inc.
Revision No.		Authorized By	RANDY SCOTT
		Date	4/4/2014

DRILL CHART	
POST #	'L'
1	1'-3 1/4"
2	1'-3"
3	1'-2 11/16"
4	1'-2 3/8"

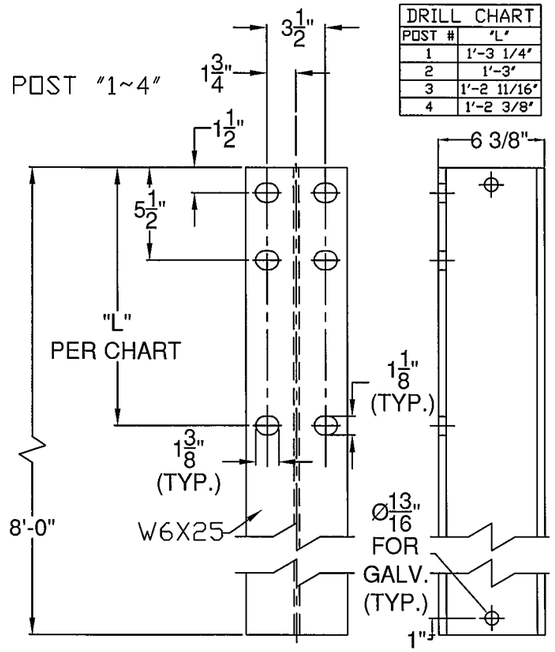

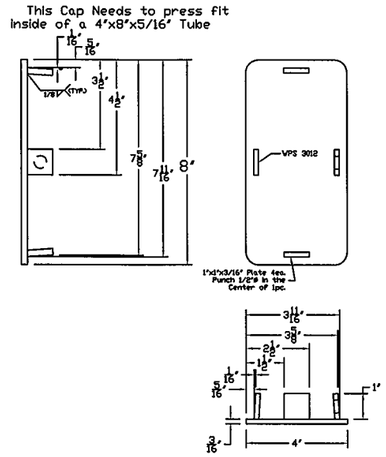

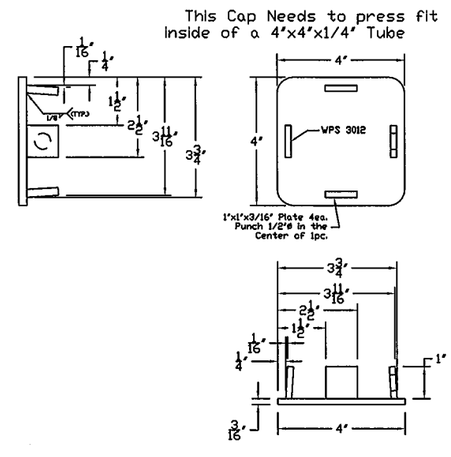

FACE OF NORTH RAIL IS 1783' CONCAVE
FACE OF SOUTH RAIL IS 1743' CONVEX

BILL OF MATERIAL (621.72) PER EACH CORNER		
QTY	DESCRIPTION	ASTM DESIGNATION
1	THRIE BEAM TERMINAL CONNECTION (10 Ga)	AASHTO M180
1	THRIE BEAM TRANSITION @ 7'-3 1/2" (10 Ga)	AASHTO M180
1	CONNECTION PLATE	A36
2	12' 6" THRIE BEAM (12Ga)	AASHTO M180
4	W6X25 POST @ 8'-0" (PUNCHING VARIES - POST 1~4)	A572 Gr. 50
1	DEFLECTOR PLATE (APPROACH OR TRAILING)	A36
1	8" X 4" X 5/16" RAIL @ 9'-4"	A500 Gr. B
1	4" X 4" X 1/4" RAIL @ 9'-4"	A500 Gr. B
1	8" X 4" X 1/4" END CAP	A36
1	4" X 4" X 1/4" END CAP	A36
1	7" x 3" x 3/8" SPLICE TUBE @ 1' 11 3/4"	A500 Gr. B
1	3" x 3" x 5/16" SPLICE TUBE @ 1' 11 3/4"	A500 Gr. B
8	ø 3/4" SCH. 40 PIPE @ 1/2"	A53
8	ø 5/8" X 1 3/4" HEX BOLTS	A307
8	ø 5/8" FLAT WASHER, HARDENED, TYPE A, PLAIN WIDE	A307
7	ø 3/4" X 6" CARRIAGE BOLT, & NUT	A307
1	ø 3/4" X 2" CARRIAGE BOLT, & NUT	A307
19	ø 5/8" X 1'-6" BUTTON HEAD POST BOLT, PLATE WASHER, F.W. & NUT	A307, A36, F844 or 307, & A563
32	ø 5/8" X 1 1/4" BUTTON HEAD SPLICE BOLT, RECESSED NUT & F.W.	A307
19	3/16" SPEC. PLATE WASHER @ 1 3/4" X 3"	A36
16	ø 3/4" X 6" ROUND HEAD BOLT, F.W., LOCK W. & NUT	A449, F436, ASME B18.21.1, & A563
10	6 X 8" WOOD POST @ 7'-0"	SUPPLIED BY OTHERS
9	6 X 8" WOOD BLOCKOUTS @ 1'-6"	SUPPLIED BY OTHERS
1	6 X 8" WOOD BLOCKOUTS @ 1'-2"	SUPPLIED BY OTHERS

HARDWARE APPLICATION				
	QTY	DESCRIPTION	ASTM DESIGNATION	APPLICATION
A	8	ø 5/8" X 1 3/4" HEX BOLTS	A307	USED IN SPLICE TUBES
B	8	ø 5/8" FLAT WASHER, HARDENED, TYPE A, PLAIN WIDE	A307	FOR SPLICE TUBES,
C.	7	ø 3/4" X 6" CARRIAGE BOLT, & NUT	A307	TERM. CONN, & CONN. PLATE TO RAIL
D	1	ø 3/4" X 2" CARRIAGE BOLT, & NUT	A307	DEFLECTOR PLATE TO CONN. PLATE
E	19	ø 5/8" X 1'-6" BUTTON HEAD POST BOLT, PLATE WASHER, F.W. & NUT	A307, A36, F844 or 307, & A563	THRIE BEAM, TO OFFSET BLOCK, TO 6x8" POST
F	32	ø 5/8" X 1 1/4" BUTTON HEAD SPLICE BOLT, RECESSED NUT & F.W.	A307	FASTEN PANEL COMPONENTS TOGETHER, (THRIE, TERMINAL CONNECTOR, TRANSITION SECTION)
G	19	3/16" (SPECIAL) PLATE WASHER @ 1 3/4" X 3"	A36	USED IN PANEL VALLEY, W/ 18" BOLT
H	16	ø 3/4" X 6" ROUND HEAD BOLT, FL. WASHER, LOCK W. & NUT	A449, F436, ASME B18.21.1, & A563	FASTEN 4X4 & 4X8 RAIL TO RAIL POST 1~4

CONNECTION PLATE DETAIL

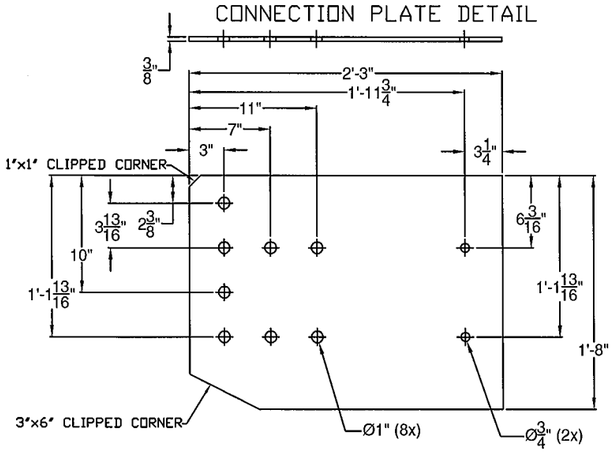

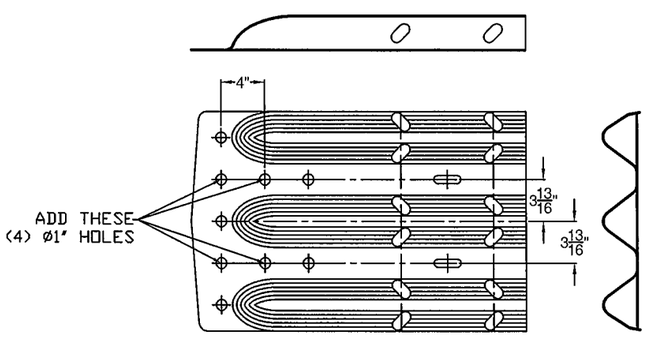

MODIFICATION TO P/N 5143.40056
TO CREATE P/N 5143.90056

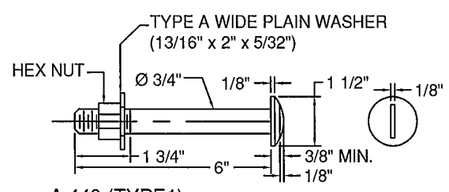

A 449 (TYPE1)
ROUND HEAD BOLT

ONLY FULL DIA. BOLTS WILL BE ALLOWED

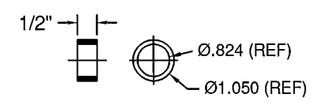

3/4" SCH. 40 PIPE SPACER

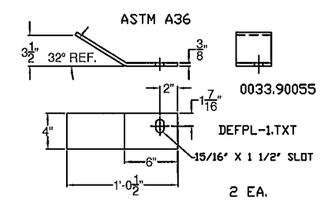

DEFLECTOR PLATE DETAIL
APPROACH SHOWN, TRAILING-OPPOSITE BEND

EXPANSION SPLICE FOR: TS4x4x1/4"

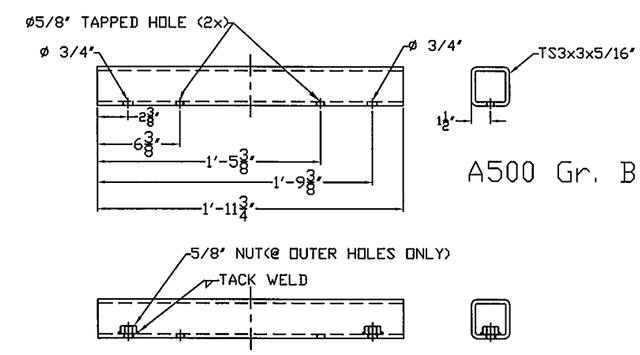

A500 Gr. B

EXPANSION SPLICE FOR: TS8x4x5/16"

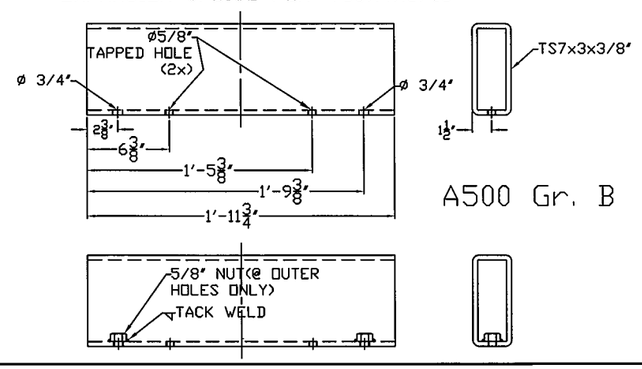

A500 Gr. B

DRAWINGS ARE FOR COMPONENTS, ASSEMBLE PER STANDARD S-360B

ITEM #: 621.72

SHEET 1 OF 2

APPROVED BY:

2 RAIL BRIDGE RAIL TO GUARDRAIL TRANSITION

PROJECT: MARLBORO BRF 010-1 (43) VT 9 PRINCIPAL ARTERIAL-NHS, BRIDGE NO. 48
TOWN OF MARLBORO, WINDHAM COUNTY, VERMONT

REV	NO.	DATE	DESCRIPTION	BY
1	5/26/14	REVISED PER 5/21/14 CHANGES	E.P.	

REV	NO.	DATE	DESCRIPTION	BY

ELDERLEE, INC.
OAKS CORNERS, NEW YORK 14518
E-Mail: dlong@elderlee.com
Tel: 315-789-6670 Fax: 315-789-6615

AISC CERTIFIED FABRICATOR

DRAWN	E.P.	4/29/14
CHECKED	D.L.	4/29/14
APPROVED	.	.
SCALE	SCHEMATIC	
DRAWING NO.	F.R.L. MARLBORO-T	

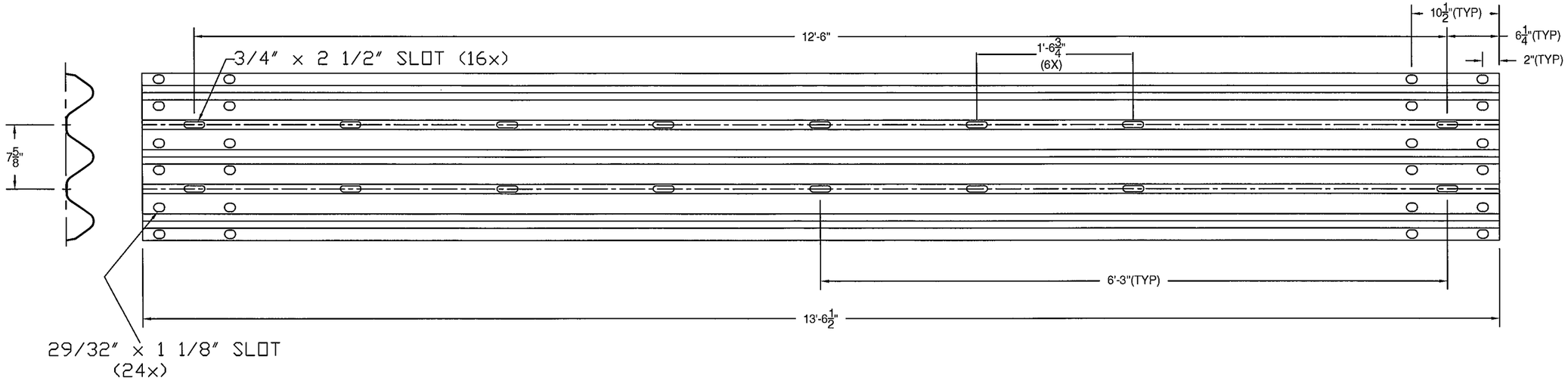

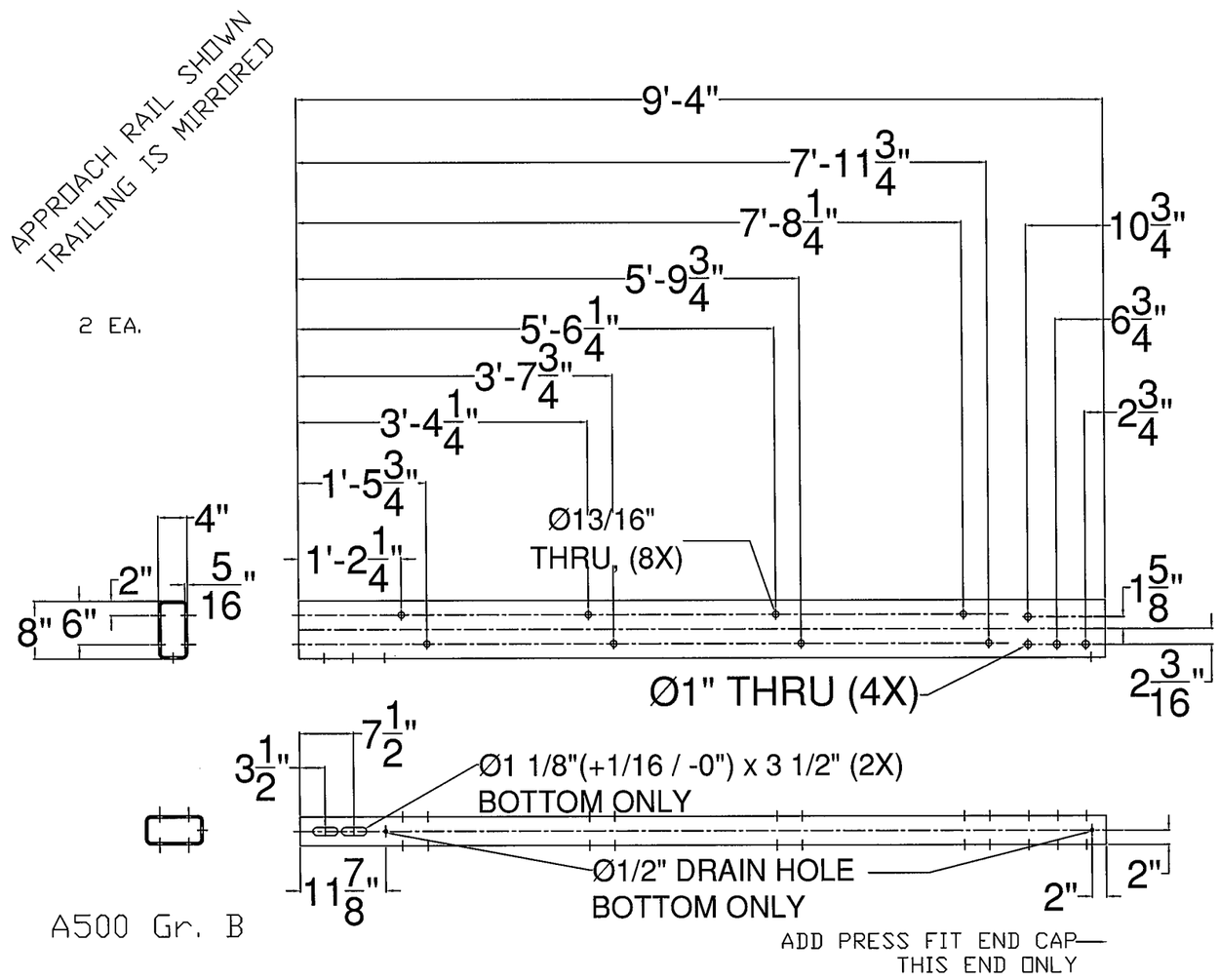

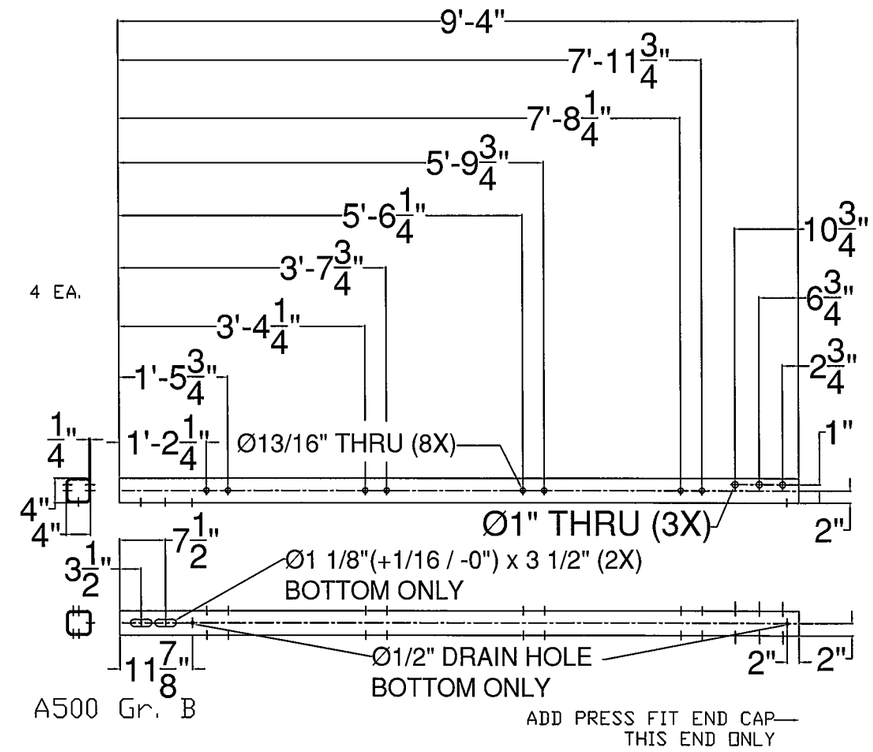

ITEM #: 621.72

SHEET 2 OF 2

APPROVED BY:

2 RAIL BRIDGE RAIL TO GUARDRAIL TRANSITION

PROJECT: MARLBORO BRF 010-1 (43) VT 9 PRINCIPAL ARTERIAL-NHS, BRIDGE NO. 48
TOWN OF MARLBORO, WINDHAM COUNTY, VERMONT

REV	NO.	DATE	DESCRIPTION	BY
	1	5/26/14	REVISED PER 5/21/14 CHANGES	E.P.

REV	NO.	DATE	DESCRIPTION	BY

ELDERLEE, INC.
OAKS CORNERS, NEW YORK 14518
E-Mail: dlong@elderlee.com
Tel: 315-789-6670 Fax: 315-789-6615

AISC CERTIFIED FABRICATOR

DRAWN	E.P.	4/29/14
CHECKED	D.L.	4/29/14
APPROVED	.	.
SCALE	SCHEMATIC	
DRAWING NO.	F.R.L. MARLBORO-T	

WELDING PROCEDURE SPECIFICATION

PQR ELDERLEE #3

Material Specification	ASTM-A500-A53-GRADE B TO A36
Welding Process	FCAW-G
Manual or Machine	SEMAUTOMATIC
Position of Welding	1G
Filler Metal Specification	A5.29
Filler Metal Classification	E81T1-Ni1C-JH4
Flux	N/A
Shielding Gas	CO 2 Dew Point -40DEG F FLOW RATE 50 CFH
Single or Multiple Pass	SINGLE
Single or Multiple Arc	SINGLE
Welding Current	DC
Polarity	REVERSE ELECTRODE POSITIVE
Welding Progression	STRINGER
Root Treatment	PER D1.5
Preheat and Interpass Temperature	PER. D1.5
Postheat Temperature	NONE
Heat Input	Min Max

WELDING PROCEDURE

Pass no.	Electrode size	Welding Current Amperes	Welding Current Volts	Travel speed	Joint detail
1	1/16	310	25	11	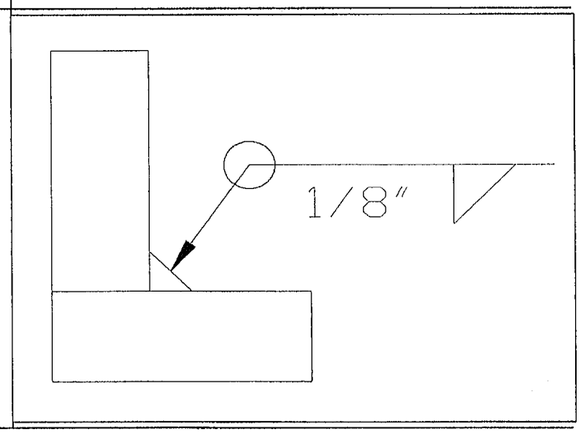
Variable	LIMITS	341 TO 269	27 TO 23	12 TO 10	

This procedure may vary due to fabrication sequence, fit-up, pass size, etc., within the limitation of variables given in Section 5.

Procedure No. 3012

Revision No.

Contractor Elderlee, Inc.

Authorized By RANDY SCOTT

Date 3/20/2014