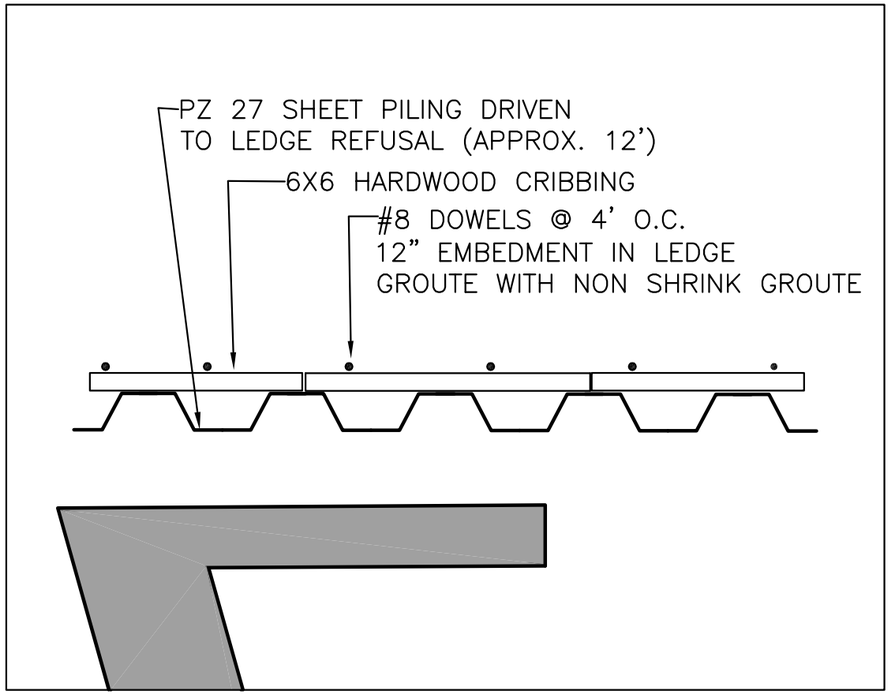

PLAN VIEW OF BOTTOM OF COFFERDAM 1"= 4'

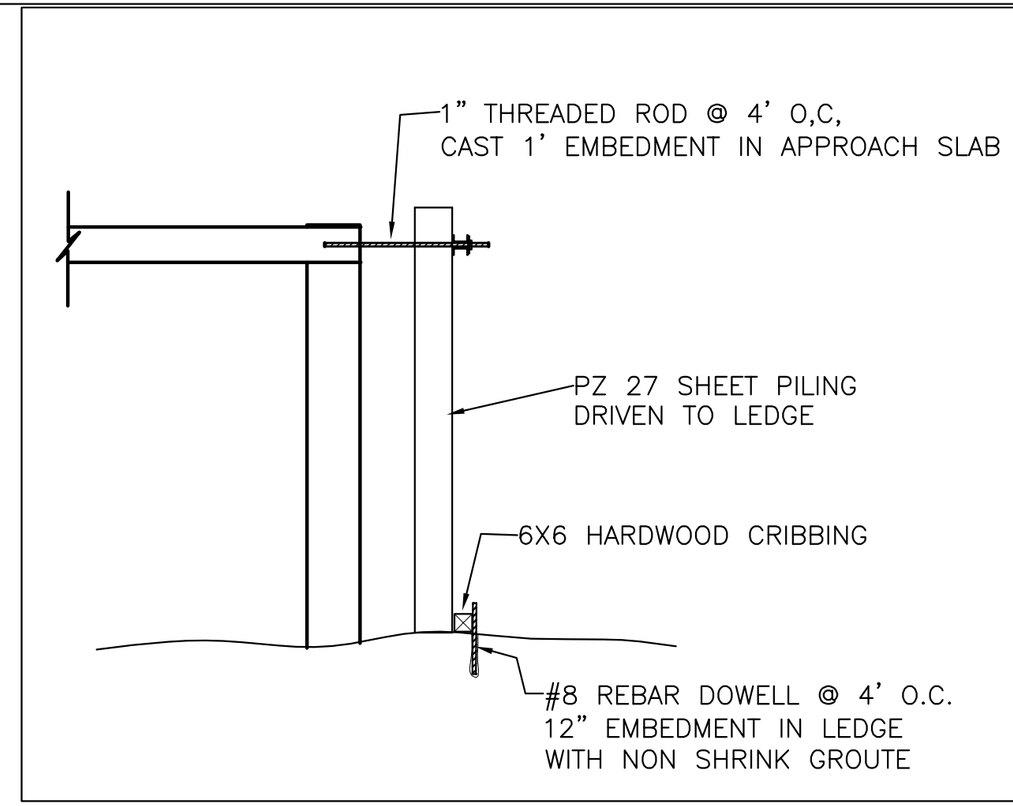

CROSS SECTION OF COFFERDAM 1"= 4'

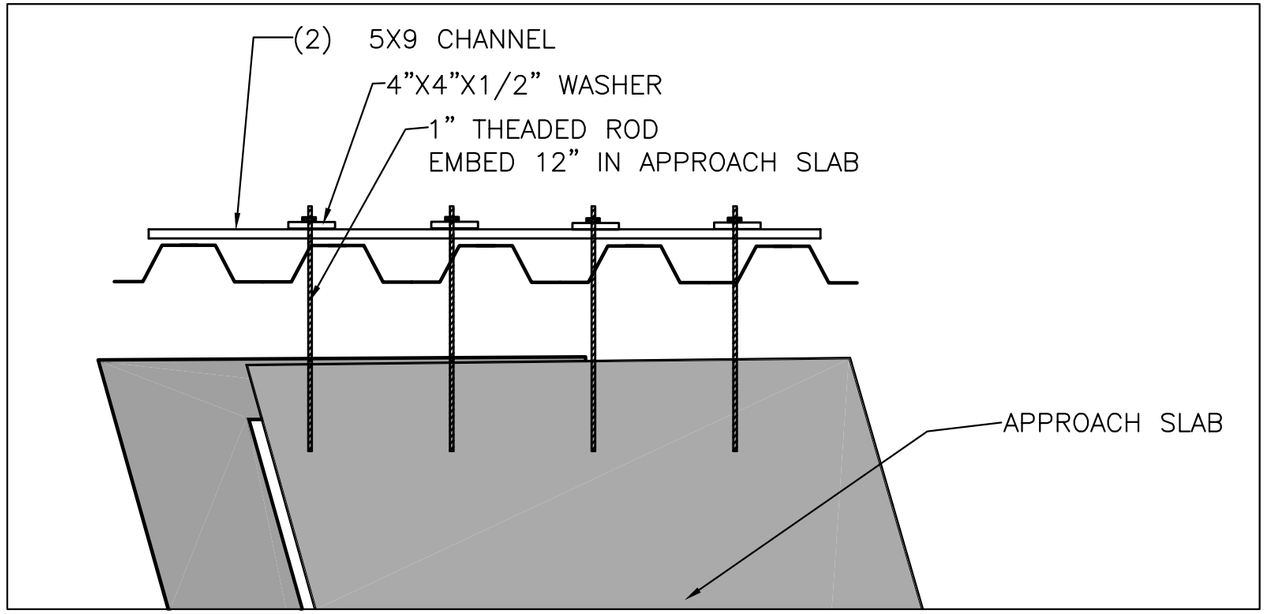

PLAN VIEW OFTOP OF COFFERDAM 1"= 4'

CONSTRUCTION SEQUENCE

1. DRIVE SHEET PILING TO LEDGE WITH EXISTING FILL ON BOTH SIDES.
2. COMPACT REQUIRED FILL BENEATH APPROACH SLAB AND POUR SLAB WITH 1" DIAM. THREADED ROD @ 4' O.C. WITH 12" EMBEDMENT
3. SECURE TOP OF SHEET PILING WITH (2) 5X9 C CHANNELS
4. EXCAVATE OUTSIDE OF SHEET PILING AND INSTALL #8 BAR DOWELLS AND HARDWOOD CRIBBING.

STATE OF VERMONT
RONALD K. BELL
No. 8501
REGISTERED PROFESSIONAL ENGINEER

COFFERDAM FOR NORTH EAST WINGWALL CONSTRUCTION

RENAUD BROS. INC.
BRF 010-1(43)
ROUTE 9
MARLBORO, VT

DATE: 9-5-2014	

BELL ENGINEERING
CIVIL & ENVIRONMENTAL
17 ECHO COVE WAY-SPOFFORD, NH 03462
(603) 363-9966

SHEET
1

BRF 010(43) COFFERDAM

Name : Analysis | **Stage : 1; Analysis: 1**

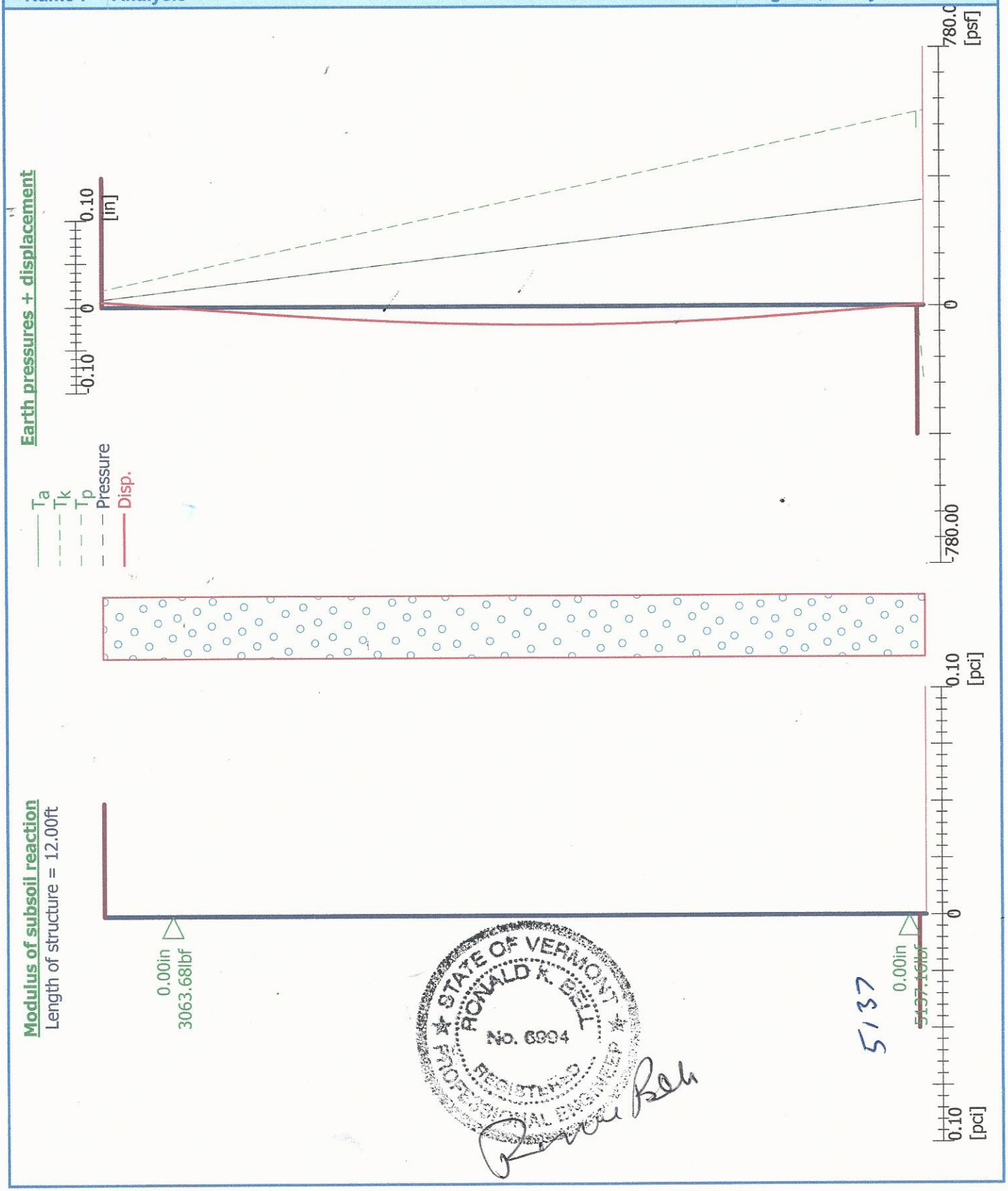

STATE OF VERMONT
RONALD K. BELL
No. 6904
REGISTERED
PROFESSIONAL ENGINEER

5137

[GeoStructural Analysis - Sheeting Check | version 5.16.13.0 | Copyright © 2013 Fine spol. s r.o. All Rights Reserved | www.finesoftware.eu]

BRF 010 (43) COFFERDAM

Sheeting structure verification

Input data

Project

Date : 9/5/2014

Settings

Standard - LRFD

Materials and standards

Concrete structures : ACI 318-11

Excavations

Active earth pressure calculation : Coulomb
Passive earth pressure calculation : Caquot-Kerisel
Earthquake analysis : Mononobe-Okabe
Consider reduction of the modulus of subsoil reaction for a braced sheeting
Verification methodology : according to LRFD

Partial factors on loads (L)			
Permanent design situation			
		Favourable	Unfavourable
Dead load of structural components :	DC =	0.90 [–]	1.25 [–]
Dead load of wearing surfaces :	DW =	0.65 [–]	1.35 [–]
Earth pressure load :	EH =	0.90 [–]	1.50 [–]
Earth surcharge load (permanent) :	ES =	0.75 [–]	1.50 [–]
Vertical pressure of earth fill :	EV =	1.00 [–]	1.35 [–]
Live load surcharge :	LS =	0.00 [–]	1.75 [–]
Water load :	WA =	1.00 [–]	1.00 [–]
Reduction coeff. of internal stability of anchors :	γ_{Ris} =	0.80 [–]	

Geometry of structure

Structure length = 12.00 ft

Type of structure: Bethlehem PZ 27
Cross-section name : sheet wall
Coeff. of press. reduc. in front of wall = 1.00

Area of cross-section A = 2.52E-02 ft^2/ft
Moment of inertia I = 4.06E-03 ft^4/ft
Elastic modulus E = 30000.0 ksi
Shear modulus G = 12000.0 ksi

Modulus of subsoil reaction determined according to the Schmitt theory.

STATE OF VERMONT
RONALD K. BELL
No. 6004
REGISTERED
PROFESSIONAL ENGINEER

Basic soil parameters

No.	Name	Pattern	φ_{ef} [°]	c_{ef} [psf]	γ [pcf]	γ_{su} [pcf]	δ [°]
1	Well graded gravel (GW), dense		41.50	0.0	133.00	70.50	40.00

All soils are considered as cohesionless for at rest pressure analysis.

[GeoStructural Analysis - Sheeting Check | version 5.16.13.0 | Copyright © 2013 Fine spol. s r.o. All Rights Reserved | www.finesoftware.eu]

BRF 010 (Y3) COFFER DAM

Parameters of soils to compute modulus of subsoil reaction (Schmitt)

No.	Name	Pattern	ν [–]	E_{oed} [psi]	E_{def} [psi]
1	Well graded gravel (GW), dense		0.20	72222.0	-

Soil parameters

Well graded gravel (GW), dense

Unit weight :	γ	=	133.0 pcf
Stress-state :	effective		
Angle of internal friction :	φ_{ef}	=	41.50 °
Cohesion of soil :	c_{ef}	=	0.0 psf
Angle of friction struc.-soil :	δ	=	40.00 °
Soil :	cohesionless		
Oedometric modulus :	E_{oed}	=	72222.0 psi
Saturated unit weight :	γ_{sat}	=	133.0 pcf

Geological profile and assigned soils

No.	Layer [ft]	Assigned soil	Pattern
1	12.00	Well graded gravel (GW), dense	
2	-	Well graded gravel (GW), dense	

Excavation

Soil in front of wall is excavated to a depth of 11.90 ft.

Terrain profile

Terrain behind the structure is flat.

Water influence

Ground water table is located below the structure.

Input surface surcharges

No.	Surcharge new	Surcharge change	Action	Mag.1 [lbf/ft²]	Mag.2 [lbf/ft²]	Ord.x x [ft]	Length l [ft]	Depth z [ft]
1	YES		permanent	150.0				on terrain

No.	Name
1	approach slab

Inserted supports

No.	New support	Depth z [ft]	Spacing b [ft]
1	YES	11.75	4.00
2	YES	1.00	4.00

STATE OF VERMONT
RONALD K. BELL
No. 6994
REGISTERED PROFESSIONAL ENGINEER

[GeoStructural Analysis - Sheeting Check | version 5.16.13.0 | Copyright © 2013 Fine spol. s r.o. All Rights Reserved | www.finesoftware.eu]

BRF 010(43) COFFERDAM

No.	Type displacement	Spring [lbf/ft]	Forced displ. [in]	Type spring	Spring [lbfft/rad]	Forced displ. [rad]
1	Fixed		0.00	Fixed		
2	Fixed		0.00	Fixed		

Global settings

Number of FEs to discretize wall = 20
Analysis of depending pressures : do not reduce
Minimum dimensioning pressure is considered as $\sigma_{a,min} = 0.20\sigma_z$

STATE OF VERMONT
RONALD R. BELL
No. 6004
REGISTERED PROFESSIONAL ENGINEER

Settings of the stage of construction

Design situation : permanent

Analysis results

Distribution of pressures acting on the structure (in front and behind the wall)

Depth [ft]	Ta,p [psf]	Tk,p [psf]	Tp,p [psf]	Ta,z [psf]	Tk,z [psf]	Tp,z [psf]
0.00	-0.00	-0.00	-0.00	22.71	50.61	2504.35
11.90	-0.00	-0.00	-0.00	316.54	584.58	28928.55
11.90	-0.00	-0.00	-0.22	316.54	584.58	28928.77
12.00	-2.01	-4.49	-222.05	319.20	589.07	29150.60

Distributions of the modulus of subsoil reaction and internal forces on the structure

Depth [ft]	kh,p [pci]	kh,z [pci]	Displacement [in]	Pressure [psf]	Shear Force [lbf/ft]	Moment [lbfft/ft]
0.00	0.00	0.00	0.01	22.71	0.00	-0.00
0.60	0.00	0.00	0.00	37.52	-18.07	4.98
1.00	0.00	0.00	-0.00	47.40	-35.05	15.47
1.00	0.00	0.00	0.00	47.40	730.87	15.47
1.20	0.00	0.00	-0.00	52.34	720.89	-129.72
1.80	0.00	0.00	-0.00	67.15	685.05	-551.95
2.40	0.00	0.00	-0.01	81.97	640.31	-950.00
3.00	0.00	0.00	-0.01	96.78	586.68	-1318.54
3.60	0.00	0.00	-0.01	111.60	524.17	-1652.24
4.20	0.00	0.00	-0.02	126.41	452.77	-1945.77
4.80	0.00	0.00	-0.02	141.23	372.47	-2193.78
5.40	0.00	0.00	-0.02	156.04	283.29	-2390.96
6.00	0.00	0.00	-0.02	170.86	185.22	-2531.96
6.60	0.00	0.00	-0.02	185.67	78.26	-2611.44
7.20	0.00	0.00	-0.02	200.49	-37.59	-2624.09
7.80	0.00	0.00	-0.02	215.30	-162.32	-2564.56
8.40	0.00	0.00	-0.02	230.12	-295.95	-2427.52
9.00	0.00	0.00	-0.02	244.93	-438.47	-2207.64
9.60	0.00	0.00	-0.01	259.75	-589.87	-1899.58
10.20	0.00	0.00	-0.01	274.56	-750.17	-1498.02
10.80	0.00	0.00	-0.01	289.38	-919.35	-997.61
11.40	0.00	0.00	-0.00	304.19	-1097.42	-393.02
11.75	0.00	0.00	-0.00	312.84	-1205.40	9.88

[GeoStructural Analysis - Sheeting Check | version 5.16.13.0 | Copyright © 2013 Fine spol. s r.o. All Rights Reserved | www.finesoftware.eu]

BRF 010 (43) COFFERDAM

Depth [ft]	kh,p [pci]	kh,z [pci]	Displacement [in]	Pressure [psf]	Shear Force [lbf/ft]	Moment [lbfft/ft]
11.75	0.00	0.00	0.00	312.84	78.89	9.88
11.89	0.00	0.00	0.00	316.34	34.22	1.85
11.91	0.00	0.00	0.00	316.59	29.15	1.34
12.00	0.00	0.00	0.00	317.19	0.00	-0.00

Maximum shear force = 1205.40 lbf/ft
Maximum moment = 2624.1 lbfft/ft
Maximum displacement = 0.02 in

Reactions in supports

No.	Depth [ft]	Displacement [in]	Reaction [lbf]
1	11.75	0.00	5137.16
2	1.00	0.00	3063.68

STATE OF VERMONT
RONALD K. BELL
No. 6994
REGISTERED PROFESSIONAL ENGINEER

[GeoStructural Analysis - Sheeting Check | version 5.16.13.0 | Copyright © 2013 Fine spol. s r.o. All Rights Reserved | www.finesoftware.eu]

BELL ENGINEERING
CIVIL & ENVIRONMENTAL
17 ECHO COVE WAY
SPOFFORD, NEW HAMPSHIRE 03462
(603) 363-9966

PROJECT NAME/ LOCATION: BRF 010(43)
SHEET #: 1 OF 1
CALCULATED BY: Ron Bell DATE: 9/5/2014
CHECKED BY: DATE:
SCALE: NTS

CHECK TENSILE CAPACITY OF 1" THREADED ROD.

FROM SHEET PILE STRUCTURE VERIFICATION THE FACTORED LOAD AT 0.1' FROM TOP OF WALL = ~ 3,000 # @ 4' O.C. SPACING

FROM TABLE 7-2 OF STEEL MANUAL THE AVAILABLE TENSILE STRENGTH OF 1" A307 BOLTS FOR LRFD = 26.5 KIPS

26.5 K >>> 3.0 KIPS OK

CHECK SHEAR CAPACITY OF # 8 Bar AT BASE OF WALL.

FROM SHEET PILE STRUCTURE VERIFICATION THE FACTORED LOAD AT BASE OF SHEET = 5.3 KIPS @ 4' O.C. SPACING.

AVAILABLE SHEAR FOR # 8 BAR = (0.6) (42.7 KIPS)
= 7.6 KIPS

7.6 KIPS > 5.3 KIPS OK

STATE OF VERMONT
RONALD K. BELL
No. 8994
REGISTERED PROFESSIONAL ENGINEER

Ron Bell