RENAUD BROS., INC.

283 Fort Bridgeman Road #2, Vernon, VT 05354 **phone (802) 257-7383**
fax (802) 257-7308

Marlboro BRF 010-1 (43)

Alternate Technical Concept

General Description

Renaud Brothers is proposing to construct the new bridge in a different manner then originally intended. The size shape width length and centerline alignment are all staying the same. The total contract price of the completed bridge will also remain the same. This will be a zero dollar change for VTRANS assuming field conditions match bid drawing conditions.

Renaud Brothers is proposing to install a two way temporary bridge that will allow us to construct most of the new bridge all in one traffic control phase. The temporary bridge will allow a safer condition for the traveling public and the crews performing the bridge reconstruction. After the first phase of constructing the new structure is complete traffic will be transferred to the new structure with no adjustment to the existing route nine centerline. The temporary bypass has been designed by Renaud Brothers and their Engineer. The details of the bridge can be found later on in the submittal. Renaud Brothers also plans to construct the new bridge with cast in place concrete construction. The redesign of the abutments and the bridge deck has been done by VTRANS Structures department. The new structure will be constructed monolithically with each abutment placed in one placement and a one day complete deck placement. Wing walls 1 and 3 will be constructed after traffic has been placed back on the original route nine centerline, and the temporary bridge is removed. The new structure redesign includes fewer steel beams for the super structure, and less reinforcing in the abutments and approach slabs. As part of the redesign the level II reinforcing has been removed and replaced with level III and Level I in the abutments and approach slabs. To maintain an accelerated construction project we will pre-gang abutment forms, pre-tie abutment reinforcing, and pre-tie deck reinforcing off site during the pile excavation and installation process. The initial plan of pre-ganging steel beams after delivery will not be feasible with the current delivery date of second week in August. However we will pursue having them delivered pre-ganged.

Itemization

The items that will be removed from the scope of work will be 502.10 Shoring of Super Structure, 507.12 Reinforcing Steel, Level II, 531.16 Bearing Device, Plain Elastomeric Pad, 540.10 Precast Structure Abutments, 540.10 Precast Approach Slabs, 900.675 SP Precast Bridge Units. The VE proposal includes a two way temporary bridge, thus eliminating the need for shoring of the existing structure. The new bridge bearing devices will change from plain elastomeric to reinforced elastomeric. The pre-cast items will be removed in lieu of placing the concrete in each of these bridge pieces monolithically right in place onsite.

The items that will have revised quantities are 507.13 Reinforcing Steel Level III, 900.608 SP High Performance Concrete Rapid Set, 900.645 Special Provision (Traffic Control). These items will be revised because of the proposed concrete placement onsite. The bid quantity for reinforcing steel was very low because the majority of the steel was intended to be installed by the pre-caster. The traffic control quantity will not change from 1 lump sum but the dollar amount will change as the traffic control system is more extensive then described in the original bid documents. The lump sum dollar amount includes all incidentals associated with, installing, maintaining, and removing all traffic control devices to safely and smoothly direct the traveling public through the construction site with minimal disruption.

The items that are new to the scope of work are 501.33 Concrete High Performance Class A, 501.34 Concrete High Performance Class B, 506.55 Structural Steel Plate Girder, 507.11 Reinforcing Steel, Level I, 508.15 Shear Connectors, 528.11 Two Way Temporary Bridge, 531.17 Bearing Device, Reinforced Elastomeric Pad. The HPCA concrete is added for the bridge deck and the approach slabs. The HPCB is added for the abutments. The steel girder is added for the new supporting members. The two way temporary is added for the safety of the traveling public. The reinforced bearings are added for the girder cushion on the abutments.

Computation of Net Savings

There will be a major time savings to the traveling public with this proposal. Route 9 is a major travel route in southern Vermont. Any stops in traffic create backups and loss of time for the commuter and the construction crews as they may have to wait for traffic to clear. This will ultimately be eliminated as the traffic will continue to flow. There will be no added cost to VTRANs for this project as shown on the Estimate of Development Cost breakdown page. Renaud Brothers will need to compensate VTRANS for the add engineering to re-design the structure. The Estimate of Development Costs is on the third page. The new items added to the contract through the change of design have inflated prices due to the accelerated cost of construction. The new items added to the change of design will be final pay quantity items. They shall be performed to the quantities shown in the change of design. There shall be no elimination of items or reduced quantities after the change of design has been agreed upon.

Prediction of Other Costs

The engineering cost for VTRANS structures to perform the re-design work will be an additional cost for Renaud Brothers. There are no other anticipated “other costs” or adverse affects with this proposal.

Plans and Specifications

We will be following the 2011 Vermont Standard Specifications for Construction. The revised abutment, steel girder and concrete deck drawings are being produced by VTRANS structures department, and are currently at 90% complete. The bypass detour drawings and two way temporary bridge are produced by Renaud Brothers and their Engineer.

Contract Completion

The project will be completed on or before November 21, 2014. See schedule for complete illustration.

Marlboro BRF 010-1 (43)
Estimate of Development Costs

ALL quantities and prices in **BOLD** are not final.

Item Number	Item Description	VE Quantity	Original Quantity	Units	Original Cost	Proposed Cost	2 year	5 year	Cost	
Removed										
502.10	Shoring	-1	1	each	$ 10,000.00	-	-	-	$ (10,000.00)	
531.16	Bearings, Plain Elastomeric	-24	24	each	$ 400.00	-	-	-	$ (9,600.00)	
540.10	Precast Abut 1	-1	1	each	$100,000.00	-	-	-	$ (100,000.00)	
540.10	Precast Abut 2	-1	1	each	$105,000.00	-	-	-	$ (105,000.00)	
540.10	Precast Approach 1	-1	1	each	$ 60,000.00	-	-	-	$ (60,000.00)	
540.10	Precast Approach 2	-1	1	each	$ 60,000.00	-	-	-	$ (60,000.00)	
900.645	SP (Traffic Control)	-1	1	each	$ 20,000.00	-	-	-	$ (20,000.00)	
900.608	SP (HPC, Rapid Set)	4	27	cy	$ 500.00	-	-	-	$ 2,000.00	
900.675	SP (Prefab Bridge Unit)	-382	382	sy	$ 2,325.00	-	-	-	$ (888,150.00)	
										$ (1,250,750.00)
New										
501.33	HPC-A - VE (FPQ)	154	0	cy	-	$ 1,000.00	$ 800.28	$ 808.05	$ 154,000.00	
501.34	HPC-B - VE (FPQ)	209	0	cy	-	$ 1,000.00	$ 508.42	$ 512.94	$ 209,000.00	
507.11	Rebar, Level 1 - VE (FPQ)	13393	0	pounds	-	$ 2.25	$ 2.19	$ 2.19	$ 30,134.25	
507.13	Rebar, Level 3 - VE (FPQ)	52093	0	pounds	-	$ 5.50	$ 3.79	$ 3.79	$ 286,511.50	
506.55	Structural Steel - VE (FPQ)	101000	0	pounds	-	$ 1.93	$ 1.70	$ 1.67	$ 194,930.00	
508.15	Shear Connectors (FPQ)	1656	0	each	-	$ 4.50			$ 7,452.00	
528.11	Temp Bridge - VE (FPQ)	1	0	each	-	$336,721.25	$302,111.11	$339,876.97	$ 336,721.25	
531.17	Bearings, Reinforced Elastomeric - VE (FPQ)	12	0	each	-	$ 750.00	$ 749.20	$ 749.20	$ 9,000.00	
900.645	SP (Traffic Control) - VE (FPQ)	1	0	each	-	$ 23,000.00	$ 87,529.00	$ 88,237.00	$ 23,000.00	
	VAOT Engineering	1	0	each	-	$ 1.00	-	-	$ 1.00	
									$ -	$ 1,250,750.00

ID		ID	Task Name	Duration	Remaining Duration	Start	Finish	Total Slack	Predecessors	% Complete
1	✓	1	**NOTICE TO PROCEED**	0 days	0 days	Mon 11-25-13	Mon 11-25-13	0 days		100%
2		2	**PRE-CONSTRUCTION**	**192 days**	**76.16 days**	**Thu 11-7-13**	**Mon 8-11-14**	**44.3 days**		**60%**
3	✓	3	CONCEPTUAL VALUE ENGINEERING PROPOSAL	63 days	0 days	Thu 11-7-13	Thu 2-6-14	0 days		100%
4		4	DESIGN REVISIONS	39 days	3.9 days	Fri 2-7-14	Wed 4-2-14	27.25 days	3	90%
5		5	DETAIL VALUE ENGINEERING PROPOSAL	41 days	8.2 days	Fri 2-7-14	Fri 4-4-14	116.5 days	3	80%
6		6	STRUCTURAL STEEL GIRDER FAB/DEL	109 days	81.75 days	Fri 3-7-14	Mon 8-11-14	0 days	4FS-19 days	25%
7		7	TRAFFIC CONTROL PLAN	65 days	3.25 days	Mon 1-13-14	Fri 4-11-14	127.3 days	3FS-19 days	95%
8	✓	8	TEMPORARY BRIDGE SUBMITTAL	50 days	0 days	Mon 1-27-14	Fri 4-4-14	0 days	3FS-19 days	100%
9	✓	9	EROSION CONTROL PLAN	53 days	0 days	Mon 1-13-14	Wed 3-26-14	0 days	3FS-20 days	100%
10		10	STRUCTURAL STEEL SHOP DRAWINGS	30 days	16.5 days	Thu 4-3-14	Wed 5-14-14	38 days	4	45%
11		11	STEEL GIRDER RIGGING PLAN	30 days	30 days	Thu 5-15-14	Fri 6-27-14	38 days	10	0%
12		12	ACELERATED CONCRETE FORMING PLANS	30 days	30 days	Fri 2-7-14	Thu 3-20-14	84 days	3	0%
13		13	BRIDGE RAIL SHOP DRAWINGS	30 days	22.5 days	Mon 3-3-14	Fri 4-11-14	109 days	5FS-25 days	25%
14		14	EXCAVATION SUPPORT	30 days	30 days	Fri 2-7-14	Thu 3-20-14	70 days	3	0%
15		15	**MOBILIZATION**	**65 days**	**42.34 days**	**Mon 1-20-14**	**Fri 4-18-14**	**124 days**		**35%**
16		16	FIELD OFFICE SETUP	33 days	23.1 days	Mon 1-20-14	Wed 3-5-14	154.3 days	1	30%
17		17	CONSTRUCTION SIGNAGE	2 days	0.2 days	Tue 4-15-14	Wed 4-16-14	124.5 days	7,16	90%
18		18	EROSION CONTROL	2 days	0.8 days	Thu 4-17-14	Fri 4-18-14	124 days	9,17	60%
19		19	**TRAFFIC DETOUR CONSTRUCTION**	**13 days**	**3.6 days**	**Thu 4-17-14**	**Mon 5-5-14**	**113 days**		**72%**
20		20	CLEARING AND GRUBBING	3 days	1.5 days	Thu 4-17-14	Mon 4-21-14	123 days	17,8	50%
21	✓	21	TEMPORARY BRIDGE ABUTMENTS	3 days	0 days	Tue 4-22-14	Thu 4-24-14	0 days	20,18,8	100%
22	✓	22	TEMPORARY BRIDGE ERECTION	3 days	0 days	Fri 4-25-14	Tue 4-29-14	0 days	21	100%
23		23	TEMPORARY BRIDGE APPROCHES	2 days	0.1 days	Wed 4-30-14	Thu 5-1-14	30 days	22	95%
24		24	TRAFFIC DETOUR PAVING AND LINE STRIPING	2 days	2 days	Fri 5-2-14	Mon 5-5-14	30 days	23	0%
25		25	**TRAFFIC TRANSFER 1**	0 days	0 days	Mon 5-5-14	Mon 5-5-14	30 days	23,24	0%
26		26	**PHASE 1 NEW BRIDGE CONSTRUCTION**	**99 days**	**99 days**	**Tue 5-6-14**	**Thu 9-25-14**	**0 days**		**0%**
27		27	BRIDGE DECK DEMO	5 days	5 days	Tue 5-6-14	Mon 5-12-14	30 days	25	0%
28		28	EX ABUTMENT DEMO ABOVE WATER	3 days	3 days	Tue 5-13-14	Thu 5-15-14	30 days	27	0%
29		29	ABUTMENT EXCAVATION EARTH	5 days	5 days	Fri 5-16-14	Thu 5-22-14	30 days	14,28	0%
30		30	ABUTMENT EXCAVATION ROCK	6 days	6 days	Tue 5-20-14	Thu 5-29-14	30 days	29FS-3 days	0%
31		31	PILE INSTALLATION	6 days	6 days	Thu 5-29-14	Fri 6-6-14	30 days	30	0%
32		32	PRE-FORM PILE CAPS/ABUTMENTS	2 days	2 days	Fri 5-23-14	Wed 5-28-14	37 days	29	0%

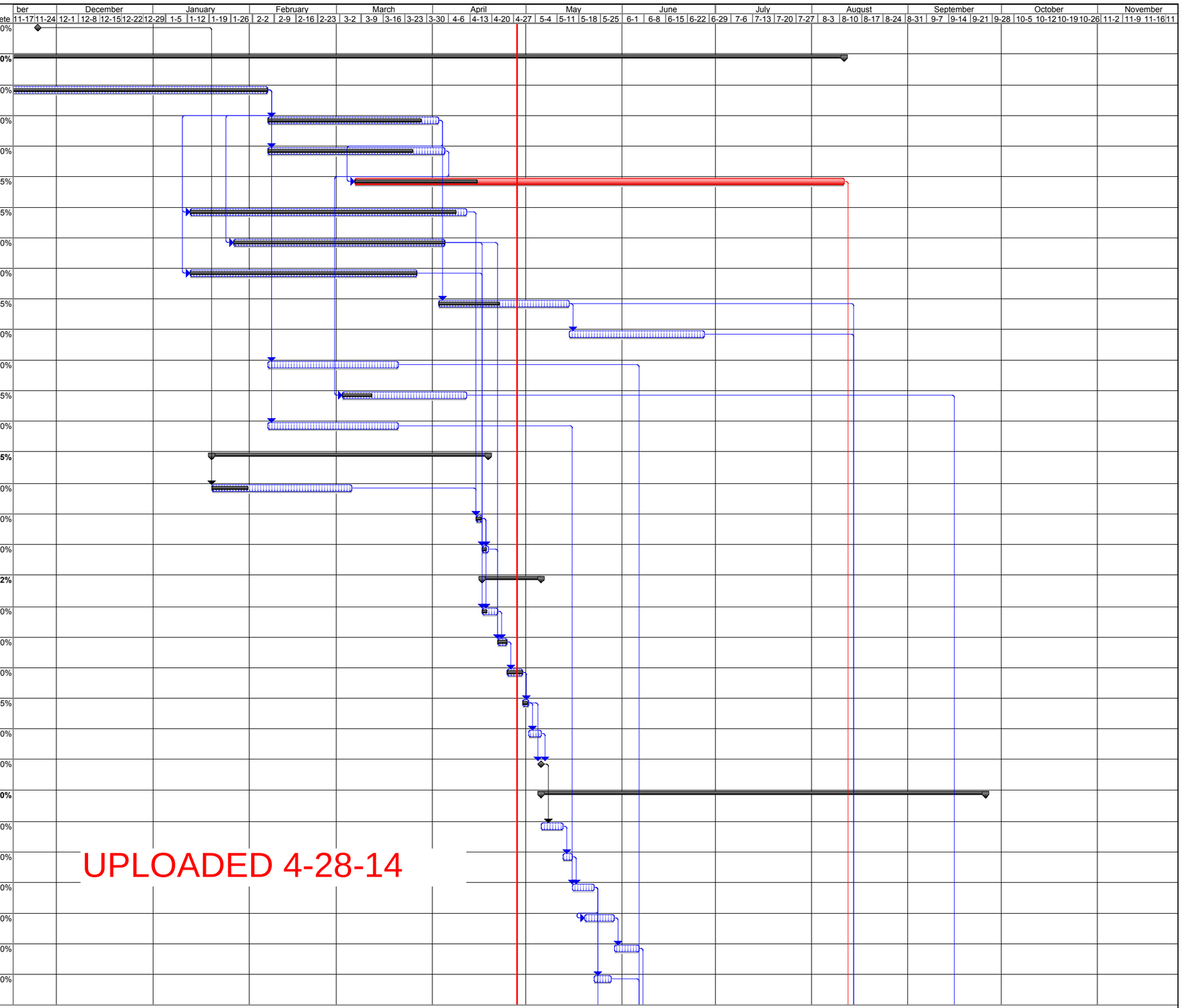

UPLOADED 4-28-14

Project: MARLBORO BRF 010-1 (43)
Date: Mon 4-28-14

Task | Critical Task | Progress | Milestone | Summary | Rolled Up Task | Rolled Up Critical Task | Rolled Up Milestone | Rolled Up Progress | Split | External Tasks | Project Summary | Group By Summary | Deadline

ID		ID	Task Name	Duration	Remaining Duration	Start	Finish	Total Slack	Predecessors	% Complete
33		33	PRE-TIE PILE CAPS/ABUTMENTS	2 days	2 days	Fri 5-23-14	Wed 5-28-14	37 days	29	0%
34		34	PLACE FORMS, REINF. & CONC. PILE CAPS/ ABUTMENTS	3 days	3 days	Fri 6-6-14	Wed 6-11-14	30 days	33,32,31,12	0%
35		35	PILE CAPS/ABUTMENT CURE	7 days	7 days	Wed 6-11-14	Fri 6-20-14	30 days	34	0%
36		36	ABUTMENT BACKFILL	5 days	5 days	Fri 6-20-14	Fri 6-27-14	30 days	35	0%
37		37	EX ABUTMENT DEMO BELOW WATER	3 days	3 days	Tue 7-1-14	Thu 7-3-14	28.5 days	36	0%
38		38	STONE FILL UNDER BRIDGE	3 days	3 days	Mon 7-7-14	Wed 7-9-14	28.5 days	37	0%
39		39	ELASTOMERIC PADS AND ANCHOR BOLTS	2 days	2 days	Thu 7-10-14	Fri 7-11-14	28.5 days	38	0%
40		40	PRE-GANG STEEL GIRDERS	1 day	1 day	Mon 8-11-14	Tue 8-12-14	0 days	35,6	0%
41		41	PRE-FORM DECK	2 days	2 days	Tue 8-12-14	Thu 8-14-14	0 days	40	0%
42		42	SET STEEL GIRDERS	1 day	1 day	Thu 8-14-14	Fri 8-15-14	5 days	0,11,38,41,39	0%
43		43	FINAL DECK FORMING	2 days	2 days	Fri 8-15-14	Tue 8-19-14	5 days	42	0%
44		44	PRE-TIE DECK REINFORCING	3 days	3 days	Thu 8-14-14	Tue 8-19-14	0 days	41	0%
45		45	FINAL DECK REINFORCING	3 days	3 days	Tue 8-19-14	Fri 8-22-14	0 days	43FS-5 days,44	0%
46		46	DECK PLACEMENT	1 day	1 day	Fri 8-22-14	Mon 8-25-14	0 days	45	0%
47		47	DECK CURE	10 days	10 days	Mon 8-25-14	Tue 9-9-14	3 days	46	0%
48		48	NEW APPROCHES EARTHWORK	3 days	3 days	Mon 8-25-14	Thu 8-28-14	0 days	46	0%
49		49	NEW APPROCH SLABS	3 days	3 days	Thu 8-28-14	Wed 9-3-14	0 days	48	0%
50		50	NEW APPROCH SLAB CURE	5 days	5 days	Thu 9-4-14	Wed 9-10-14	0 days	49	0%
51		51	CAST IN PLACE CURBING	4 days	4 days	Fri 9-5-14	Wed 9-10-14	0 days	50FF	0%
52		52	CURBING CURE	5 days	5 days	Thu 9-11-14	Wed 9-17-14	0 days	51	0%
53		53	BRIDGE DECK MEMBRANE	2 days	2 days	Thu 9-18-14	Fri 9-19-14	0 days	47,52	0%
54		54	GUARD RAIL	2 days	2 days	Tue 9-16-14	Wed 9-17-14	2 days	52FF	0%
55		55	BRIDGE RAIL	2 days	2 days	Tue 9-16-14	Wed 9-17-14	2 days	13,54FF	0%
56		56	SOUTH STONE FILL AND EROSION MATTING	5 days	5 days	Wed 9-10-14	Tue 9-16-14	3 days	47	0%
57		57	PERMANENT PAVING & LINE STRIPING	2 days	2 days	Mon 9-22-14	Tue 9-23-14	0 days	56,54,55,53	0%
58		58	BRIDGE DECK PLUG JOINT	2 days	2 days	Wed 9-24-14	Thu 9-25-14	0 days	57	0%
59		59	**TRAFFIC TRANSFER 2**	0 days	0 days	Thu 9-25-14	Thu 9-25-14	0 days	58	0%
60		**60**	**PHASE 2 NEW BRIDGE CONSTRUCTION**	**9 days**	**9 days**	**Fri 9-26-14**	**Wed 10-8-14**	**0 days**		**0%**
61		61	NORTH WING WALLS	4 days	4 days	Fri 9-26-14	Wed 10-1-14	0 days	59	0%
62		62	NORTH WINGWALL CURE	5 days	5 days	Thu 10-2-14	Wed 10-8-14	0 days	61	0%
63		63	**SUBSTANTIAL COMPLETION**	0 days	0 days	Wed 10-8-14	Wed 10-8-14	5 days	62	0%
64		64	NORTH SIDE STONE FILL AND EROSION MATTING	3 days	3 days	Thu 10-9-14	Mon 10-13-14	0 days	62	0%
65		65	CLEAN UP AND DEMOBILIZATION	2 days	2 days	Tue 10-14-14	Wed 10-15-14	0 days	64	0%

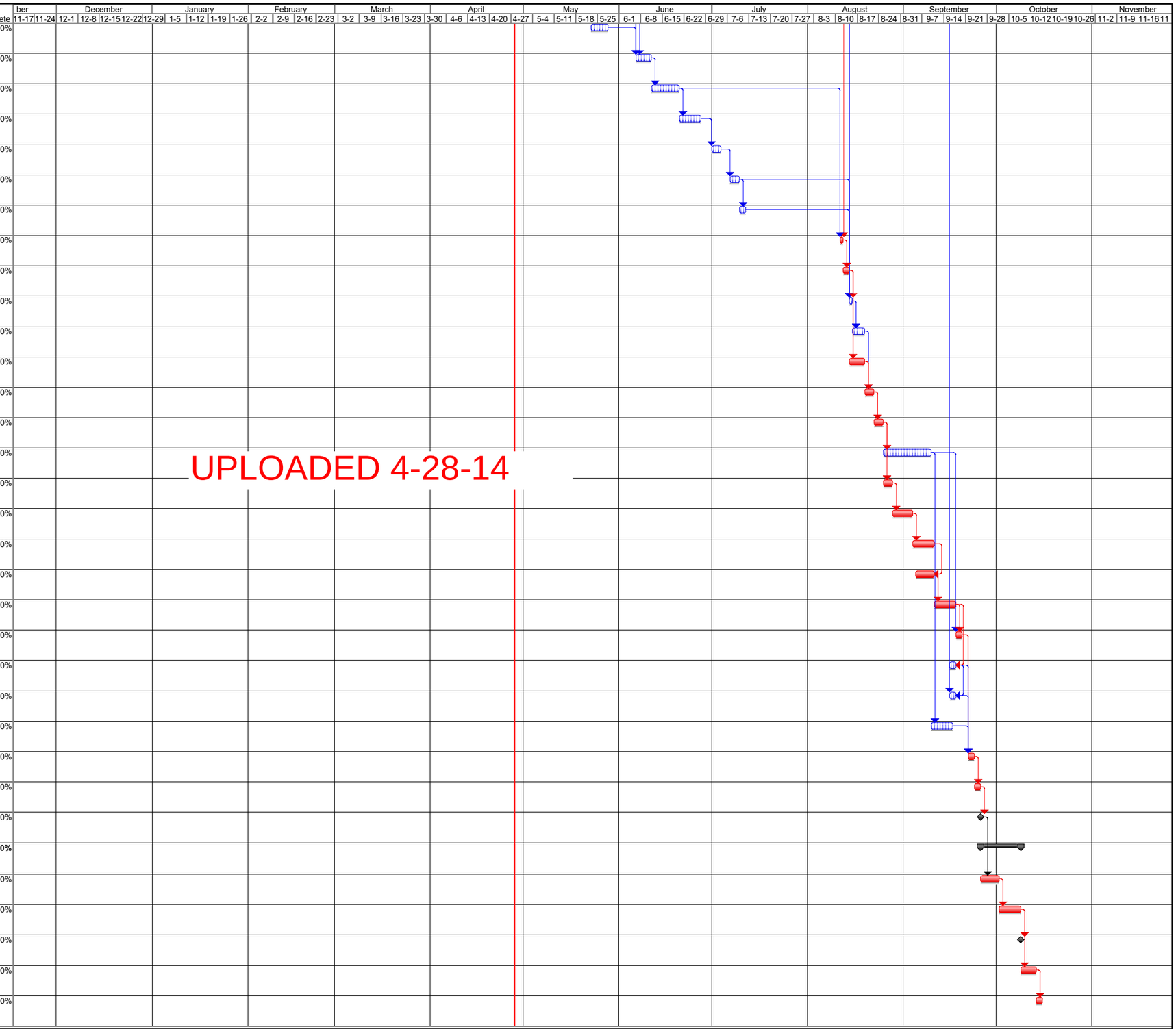

Project: MARLBORO BRF 010-1 (43)
Date: Mon 4-28-14

Task | Critical Task | Progress | Milestone | Summary | Rolled Up Task | Rolled Up Critical Task | Rolled Up Milestone | Rolled Up Progress | Split | External Tasks | Project Summary | Group By Summary | Deadline

State of Vermont
PDD/Structures Design Section
National Life Building – Drawer 33
Montpelier, VT 05633-5001
www.aot.state.vt.us

[phone] 802-828-2621
[fax] 802-828-3566
[ttd] 800-253-0191

Agency of Transportation

April 8, 2014

Renaud Bros. Construction
283 Fort Bridgeman Rd #2
Vernon, VT 05354

Project Name: **Marlboro BRF 010-1(43)**
Structure Identification: **Bridge #48 on VT RTE 9 over Whetstone Brook**

The Temporary Bridge and Detour plans received in this office on April 1, 2014 have been reviewed. The plans are approved and calculations are acceptable.

Sincerely,

Kristin M. Higgins

Kristin M. Higgins, P.E.
Structures Project Manager

Attachments
cc: [X] Resident Engineer; Ron Lemaire
[X] Contractor: Renaud Bros. Inc

COMMENT NOTED.
A RECORD PLAN
WILL BE SUBMITTED
PRIOR TO
TRANSFERING
TRAFFIC

Since pole is being moved out, was moving the PI to here considered to provide additional room for phase 1 abutment #2/approach slab #2 construction? (comment on last submittal)

There is not going to much room to work in this area with the current configuration shown.

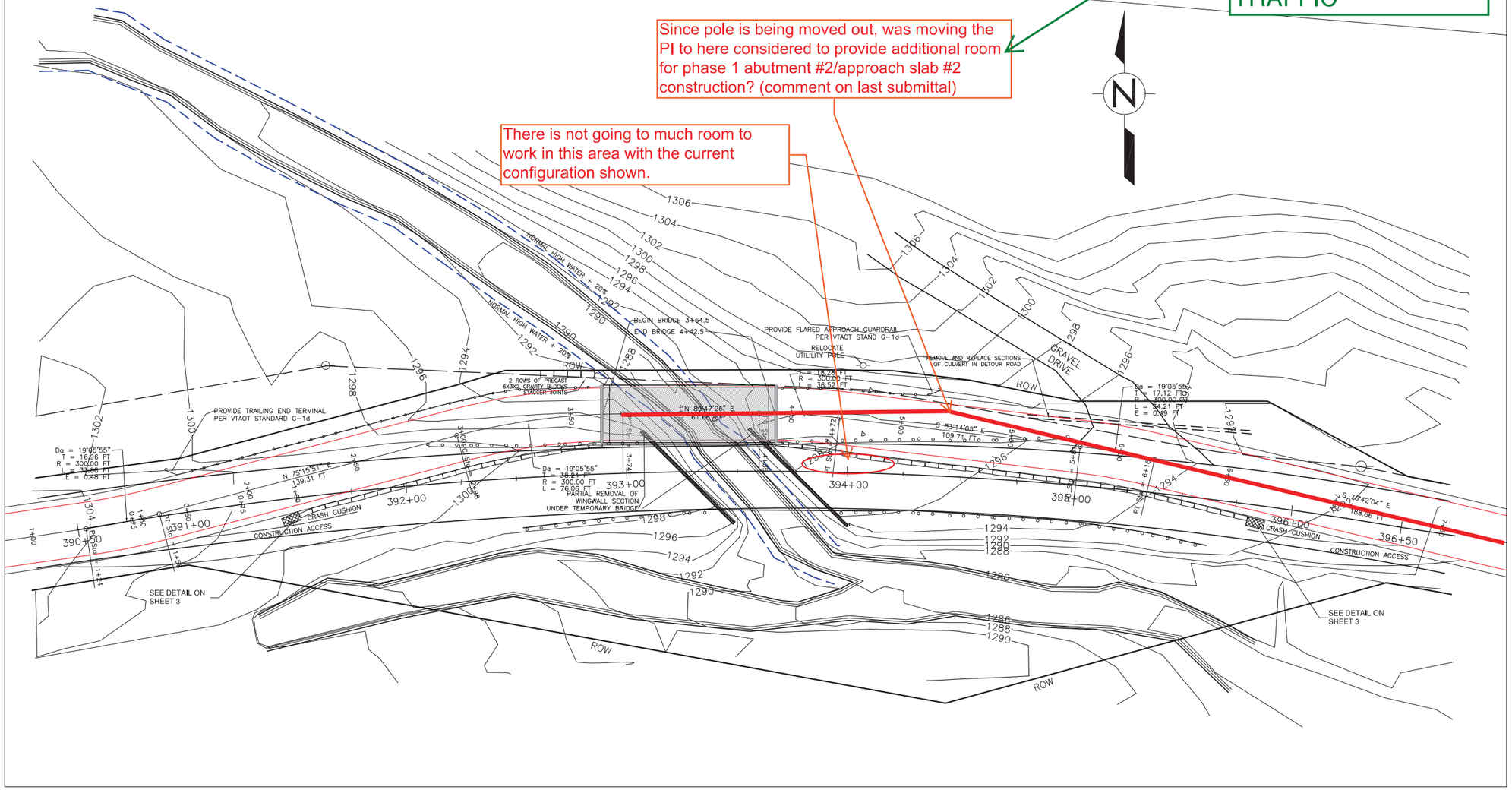

Vermont Agency of Transportation
RECEIVED
MARLBORO BRF 010-1 (43) - TEMPORARY TRAFFIC BYPASS 4-3-14-A.pdf

CK'D BY RK OK'D BY

April 1, 2014

RESUBMIT NO Approved
BY KH DATE 4-8-2014

20 0 20 40 60
Scale: 1" = 20'

PLAN OF TEMPORARY BRIDGE, ABUTMENTS & BYPASS ROAD
BRF 010-1(43)
ROUTE 9
MARLBORO, VT

DATE: FEB 20, 2014 *SHEET: 1*
AMENDED: 3-14-2014

BELL ENGINEERING
CIVIL & ENVIRONMENTAL
17 ECHO COVE WAY-SPOFFORD, NH 03462
(603) 363-9966

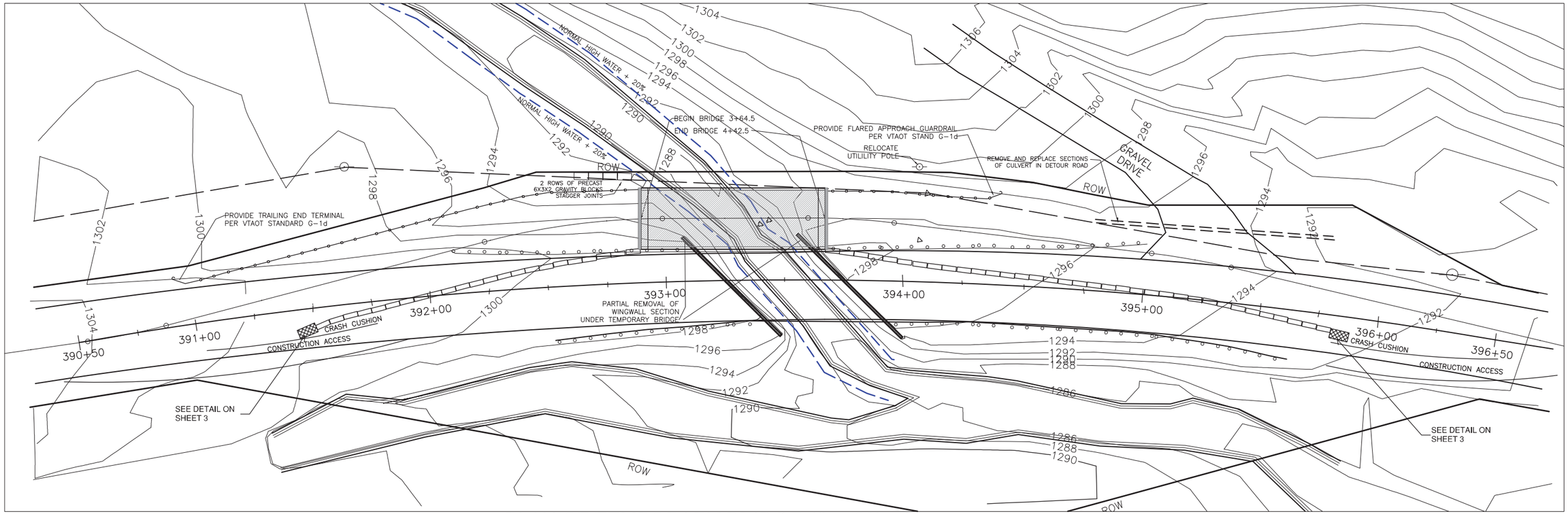

PLAN OF TEMPORARY BRIDGE 1" = 20'

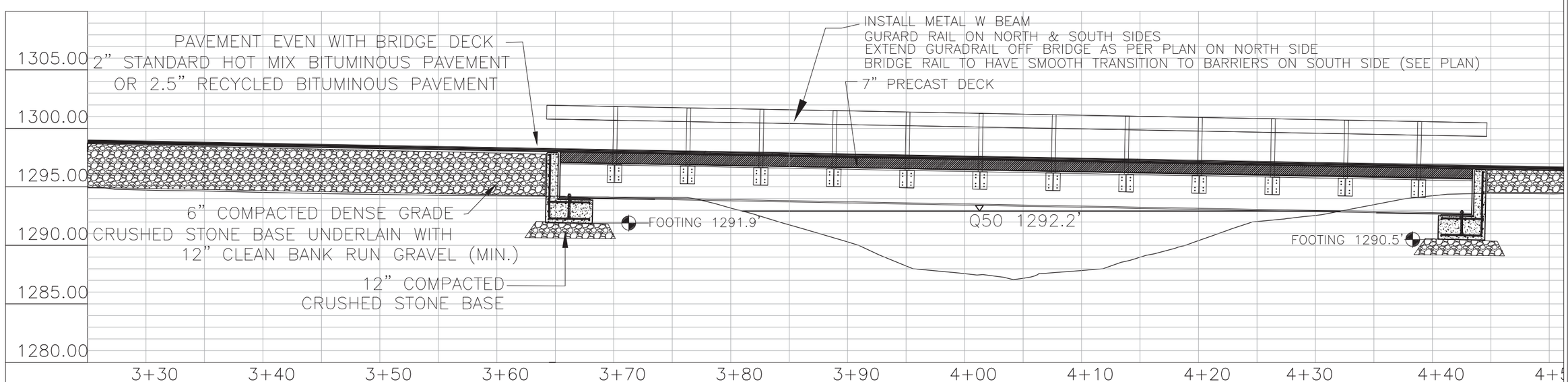

PROFILE OF TEMPORARY BRIDGE 1" = 4'

Vermont Agency of Transportation
RECEIVED
MARLBORO BRF 010-1 (43) - TEMPORARY TRAFFIC BYPASS 4-1-14.pdf

CK'D BY RK OK'D BY
April 1, 2014
RESUBMIT NO Approved
BY KH DATE 4-8-2014

STATE OF VERMONT RONALD R. BELL No. 6524 REGISTERED PROFESSIONAL ENGINEER

PLAN AND PROFILE OF TEMPORARY BRIDGE, ABUTMENTS & BYPASS ROAD

RENAUD BROS. INC.
BRF 010-1(43)
ROUTE 9
MARLBORO, VT

DATE: 2-20-2014	
AMENDED 3-1-2014	

BELL ENGINEERING
CIVIL & ENVIRONMENTAL
17 ECHO COVE WAY SPOFFORD, NH 03462
(603) 363-9966

SHEET
2

SEE CRASH GARD MANUAL SECTION "Recommended Installation Procedure"

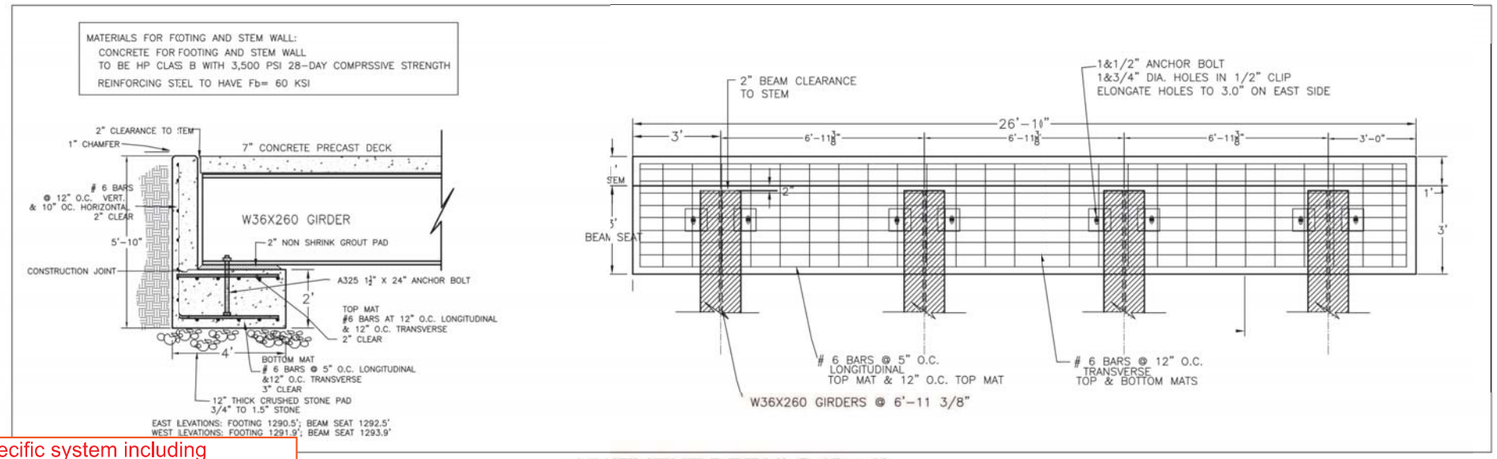

ABUTMENT DETAILS 1" = 2'

Provide details on specific system including manufacturer and product name, dimensions between barrels and dimensions from concrete barrier so it can be properly installed.

DESIGN VELOCITY 35 mph
7 barrels/array

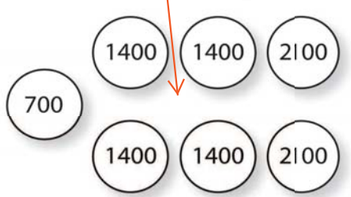

GUARDRAIL DEFLECTION CHART
(PER AASHTO - ROADSIDE DESIGN GUIDE - LATEST EDITION)

TYPE		GR POST SPACING	DEFLECTION
THREE CABLE	W/STEEL POSTS	16' - 0"	11' - 6"
	W/WOODEN POSTS	12' - 6"	11' - 6"
W-BEAM	W/STRONG POST	6' - 3"	3'
BOX BEAM		6' - 0"	5'
THRIE BEAM	W/STRONG POST	6' - 3"	2'

THIS CHART LISTS THE THEORETICAL MAXIMUM DEFLECTION DISTANCE, UPON IMPACT, OF DIFFERENT TYPES OF GUARDRAIL AND VARIOUS POST SPACINGS.

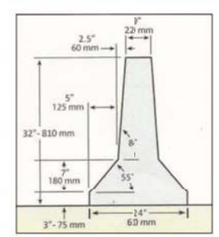

F-SHAPE BARRIER DIMENSIONS

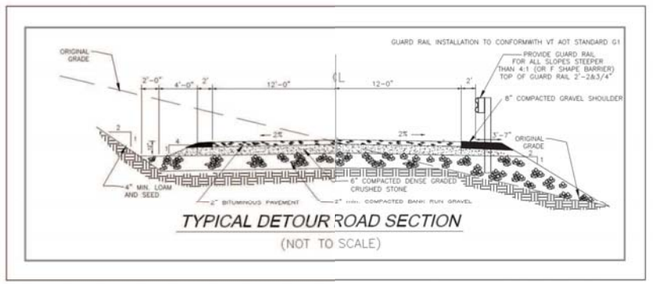

TYPICAL DETOUR ROAD SECTION
(NOT TO SCALE)

Vermont Agency of Transportation
RECEIVED
MARLBORO BRF 010-1 (43) - TEMPORARY TRAFFIC BYPASS 4-1-14 A.pdf

CK'D BY RK OK'D BY
April 1, 2014
RESUBMIT NO Approved
BY KH DATE 4-8-2014

DETAILS: TEMPORARY BRIDGE

BRF 010-1(43)
ROUTE 9
MARLBORO, VT

DATE 2-20-2014	
AMENDED 2-14-2014	

BELL ENGINEERING
CIVIL & ENVIRONMENTAL
17 ECHO COVE WAY SPOFFORD, NH 03462
(603) 363-9966

SHEET 3

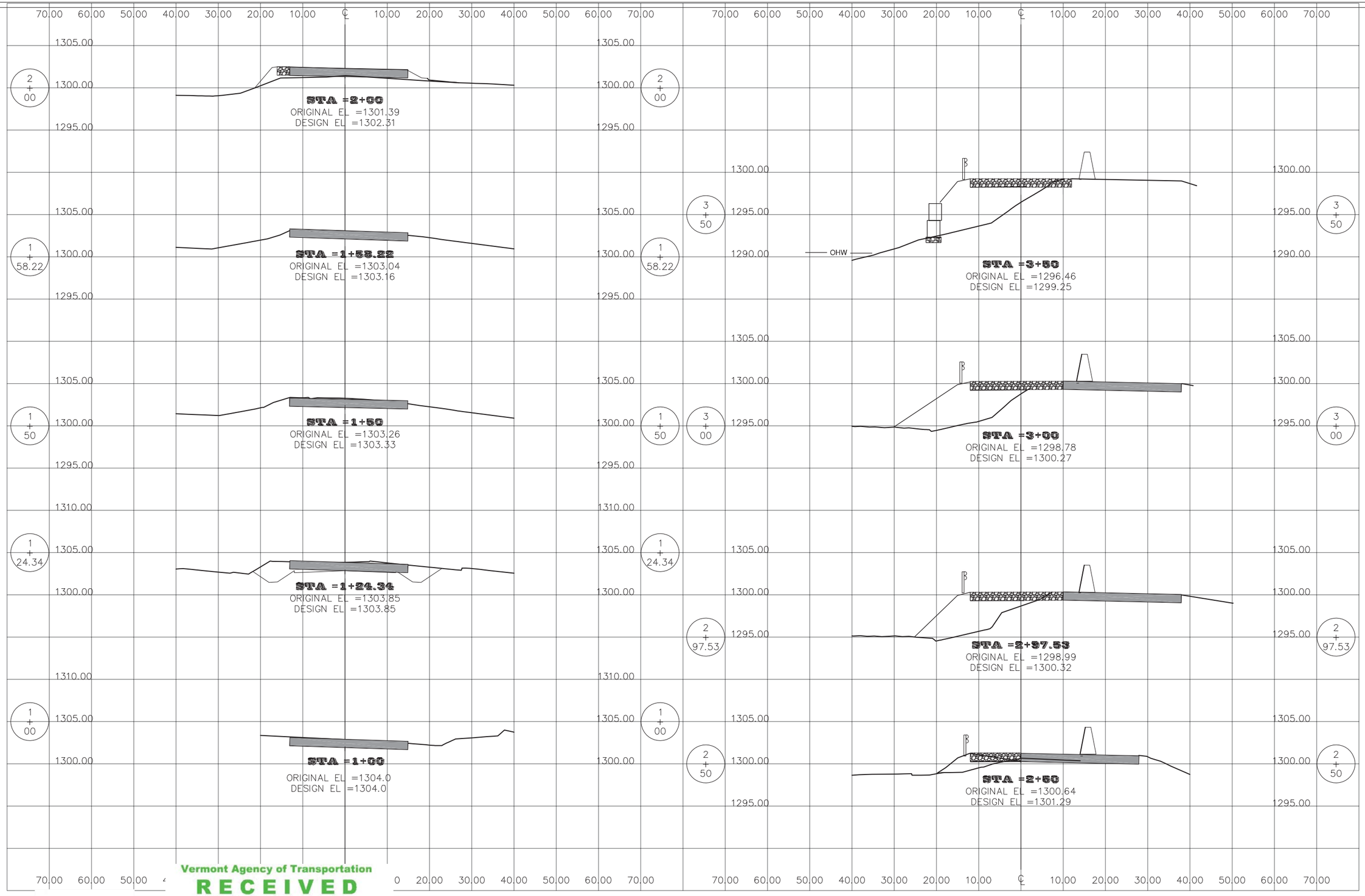

Vermont Agency of Transportation
RECEIVED
MARLBORO BRF 010-1 (43) - TEMPORARY TRAFFIC BYPASS 4-1-14.pdf
CK'D BY RK OK'D BY
April 1, 2014
RESUBMIT NO Approved
BY KH DATE 4-8-2014

STATE OF VERMONT RONALD A. BELL No. 8094 REGISTERED PROFESSIONAL ENGINEER

CROSS SECTIONS

RENAUD BROS. INC.
BRF 010-1(43)
ROUTE 9
MARLBORO, VT

DATE: 2-20-2014

BELL ENGINEERING
CIVIL & ENVIRONMENTAL
17 ECHO COVE WAY SPOFFORD, NH 03462
(603) 363-9966

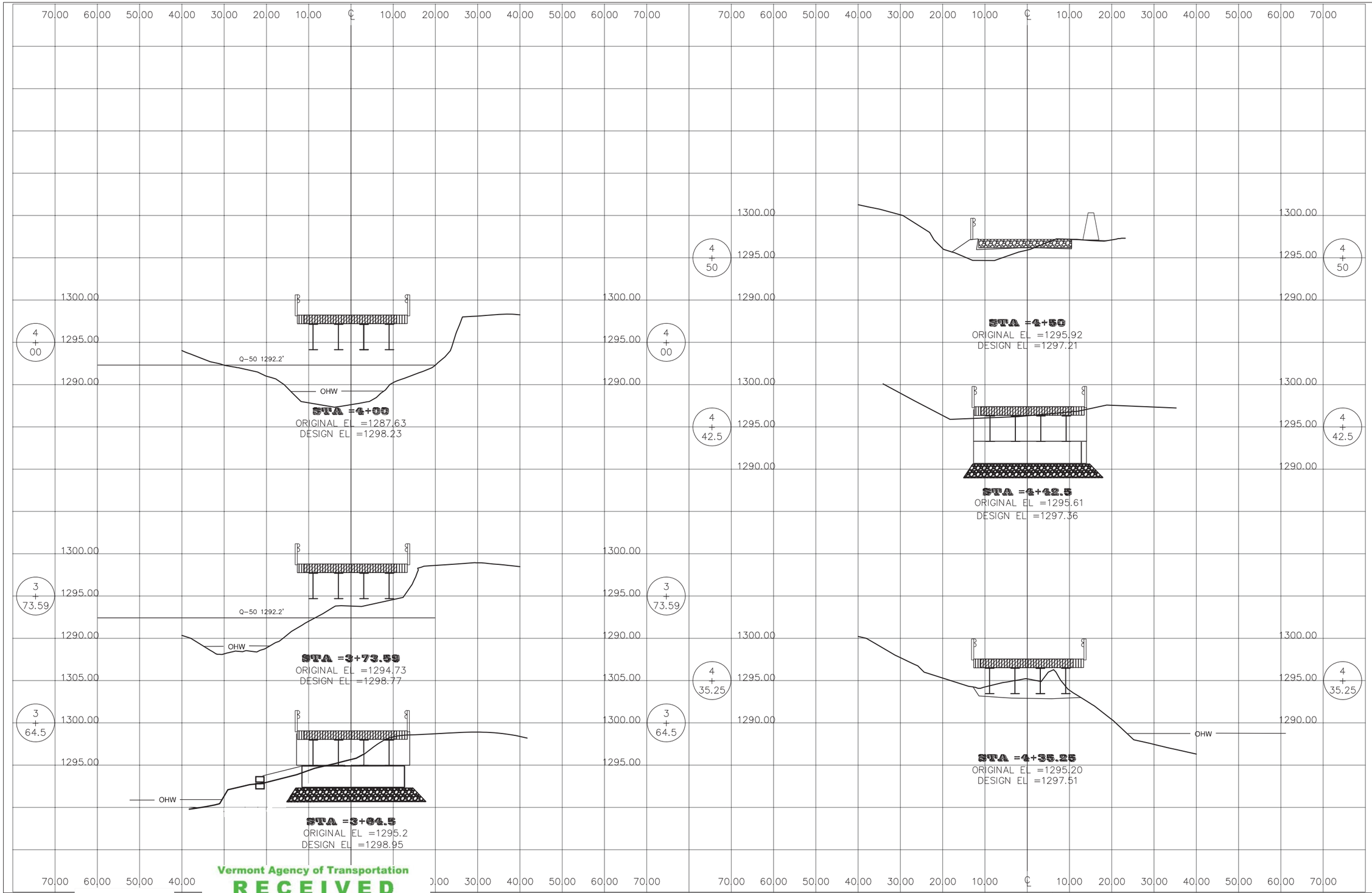

Vermont Agency of Transportation
RECEIVED
MARLBORO BRF 010-1 (43) - TEMPORARY TRAFFIC BYPASS 4-8-14.dwg

STATE OF VERMONT RONALD A. BELL No. 8004 REGISTERED PROFESSIONAL ENGINEER

CK'D BY RK OK'D BY

April 1, 2014

RESUBMIT NO Approved

BY KH DATE 4-8-2014

CROSS SECTIONS

RENAUD BROS. INC.
BRF 010-1(43)
ROUTE 9
MARLBORO, VT

DATE: 2-03-2014	

BELL ENGINEERING
CIVIL & ENVIRONMENTAL
17 ECHO COVE WAY SPOFFORD, NH 03462
(603) 363-9986

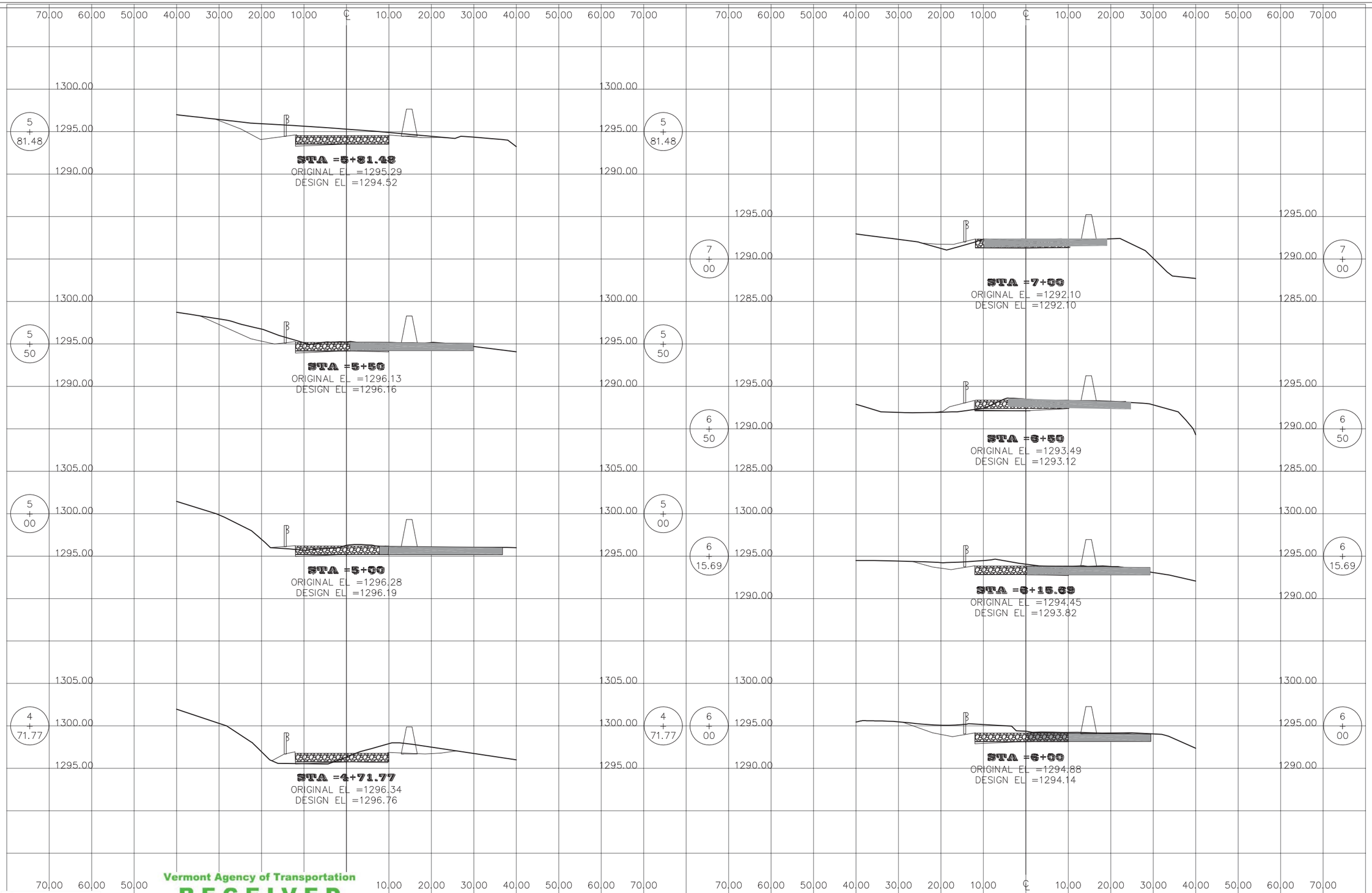

Vermont Agency of Transportation
RECEIVED
MARLBORO BRF 010-1 (43) - TEMPORARY TRAFFIC SYPHASE 4-1-14.pdf
CK'D BY RK OK'D BY
April 1, 2014
RESUBMIT NO Approved
BY KH DATE 4-8-2014

STATE OF VERMONT RONALD K. BELL No. 8204 REGISTERED PROFESSIONAL ENGINEER

CROSS SECTIONS

RENAUD BROS. INC.
BRF 010-1(43)
ROUTE 9
MARLBORO, VT

DATE: 2-20-2014	

BELL ENGINEERING
CIVIL & ENVIRONMENTAL
17 ECHO COVE WAY SPOFFORD, NH 03462
(603) 363-9966

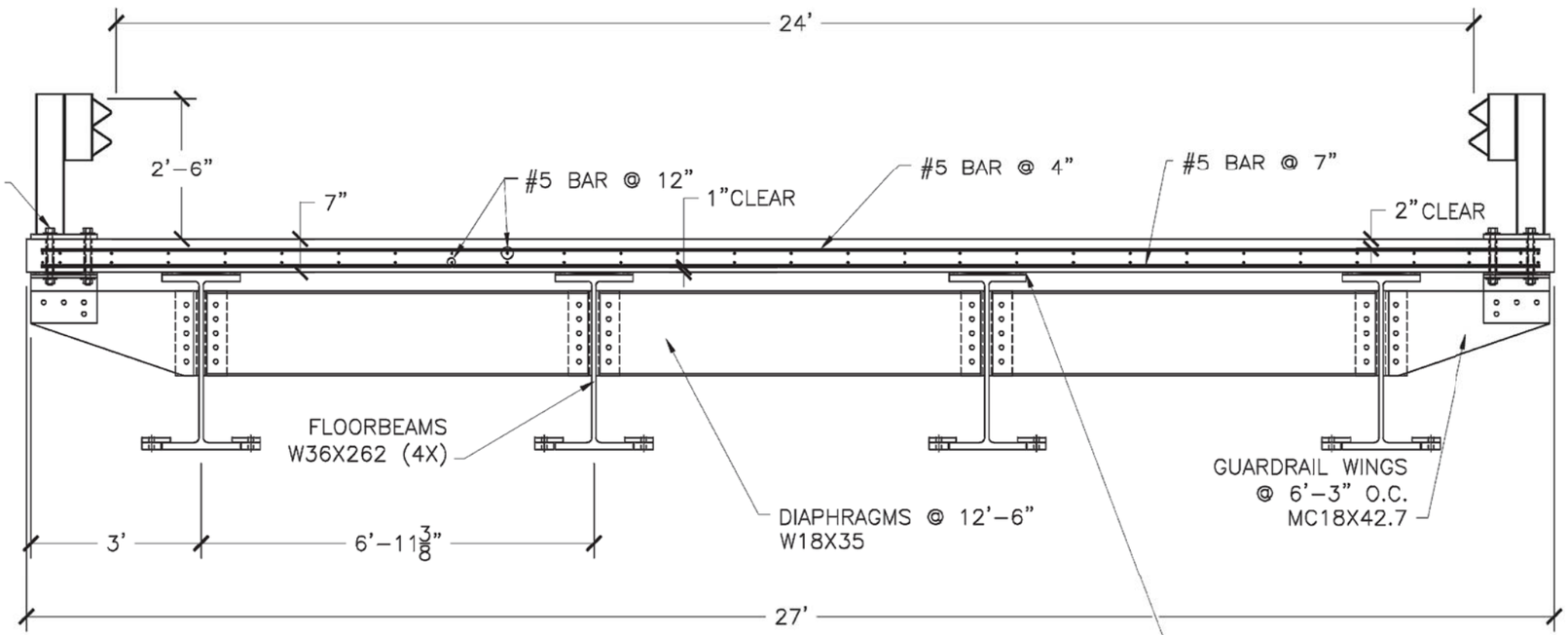

TEMP. BRIDGE SECTION
N.T.S.

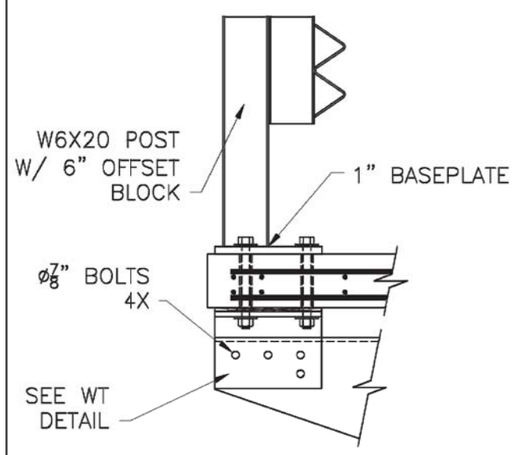

GUARDRAIL/SLAB CONN. DETAIL
N.T.S

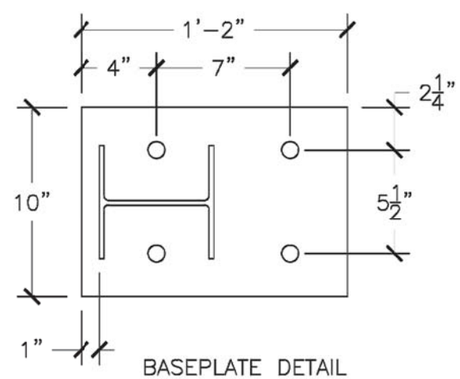

BASEPLATE DETAIL
N.T.S.

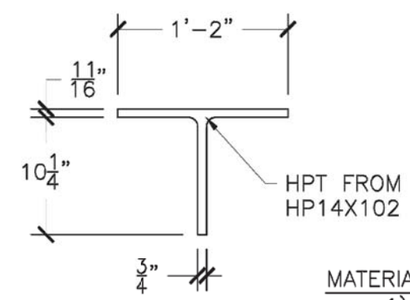

WT DETAIL
N.T.S.

MATERIAL NOTES:
1) REBAR TO BE GR. 60 MIN.
2) CONCRETE TO BE 5,000 PSI MIN.

REV.		
NO.	DATE	COMMENTS
1	3/6/14	GUARDRAIL DETAILS
2	3/17/14	REBAR COVERAGE
3	3/26/14	REBAR CLEARANCE
4	3/31/14	REBAR SPACING

DATE:	3/24/2014
DRAWN BY:	A.D.
CHK'D BY:	C.E.

JOB NAME: MARLBORO BRO 1442(35)
JOB NO:
SHEET NAME: TEMP. BRIDGE SECTION
SHEET: 7

R.B. RENALD BROS. INC.

Vermont Agency of Transportation
RECEIVED
MARLBORO BRF 010-1 (43) - TEMPORARY TRAFFIC BYPASS 4-1-14.pdf

CK'D BY RK OK'D BY
April 1, 2014
RESUBMIT NO Approved
BY KH DATE 4-8-2014

C:\Users\ADunklee\Documents\Works In Progress 2014\MARLBORO BRF010-1 (43)\TEMPORARY BRIDGE.dwg 3/31/2014 11:45:19 AM

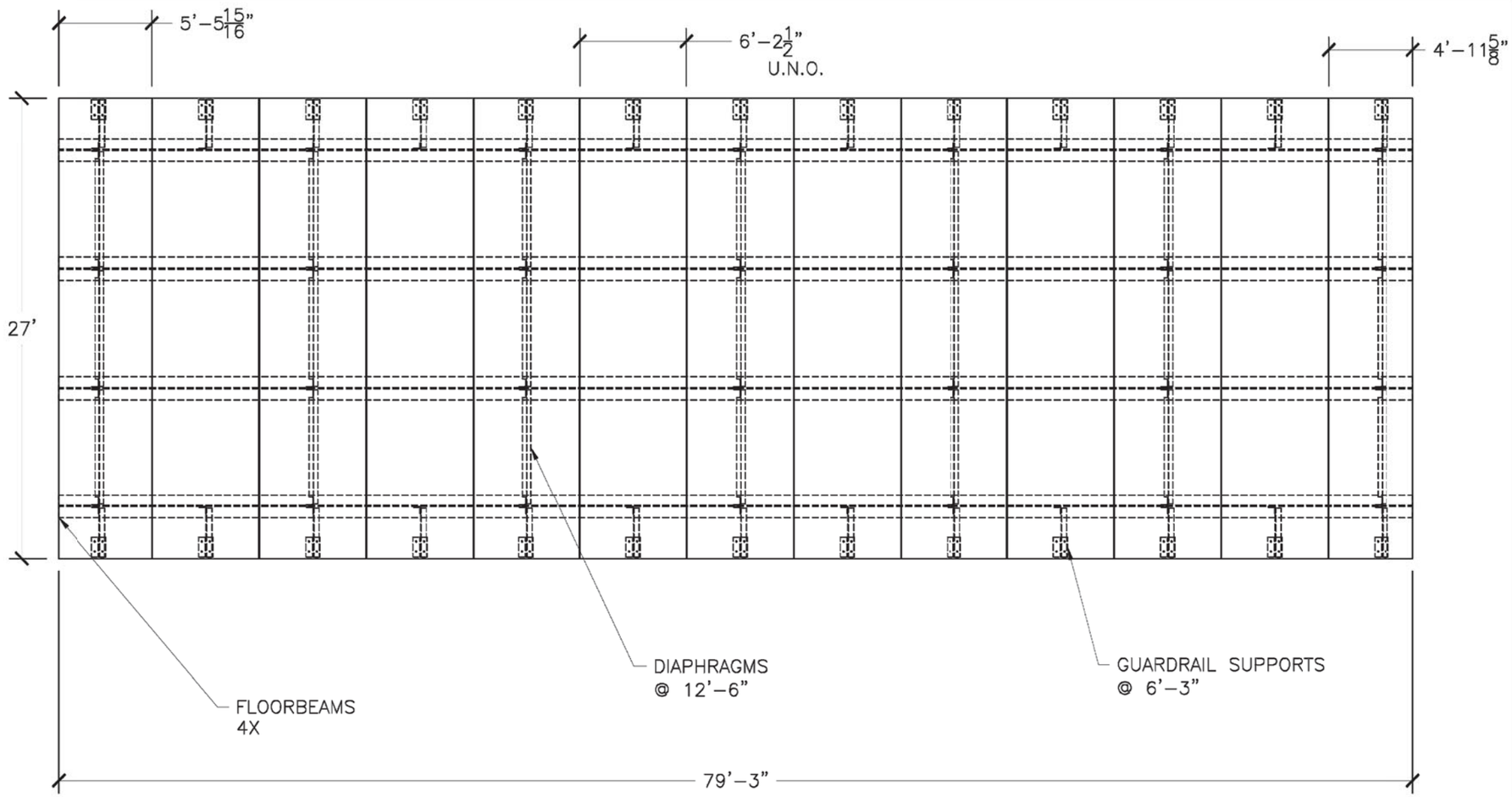

BRIDGE FRAMING PLAN
NOT TO SCALE

STATE OF VERMONT
RONALD K. BELL
No. 6994
REGISTERED
PROFESSIONAL ENGINEER

Vermont Agency of Transportation
RECEIVED
MARLBORO BRF 010-1 (43) - TEMPORARY TRAFFIC BYPASS 3-31-14.pdf

CK'D BY RK OK'D BY
April 1, 2014
RESUBMIT NO Approved
BY KH DATE 4-8-2014

REV.		
NO.	DATE	COMMENTS

DATE:	3/24/2014
DRAWN BY:	A.D.
CHK'D BY:	C.E.

JOB NAME:	MARLBORO BRO 1442(35)
JOB NO:	
SHEET NAME:	BRIDGE PLAN

R.L. BERNARD BROS., INC.
295 FT. DESIGN RD. WILLIGH VT. 05594
PH: (802) 291-5555 FAX: (802) 291-5508

SHEET: 8

C:\Users\ADunklee\Documents\Works In Progress 2014\MARLBORO BRF010-1 (43)\TEMPORARY BRIDGE.dwg, 3/31/2014 11:45:20 AM

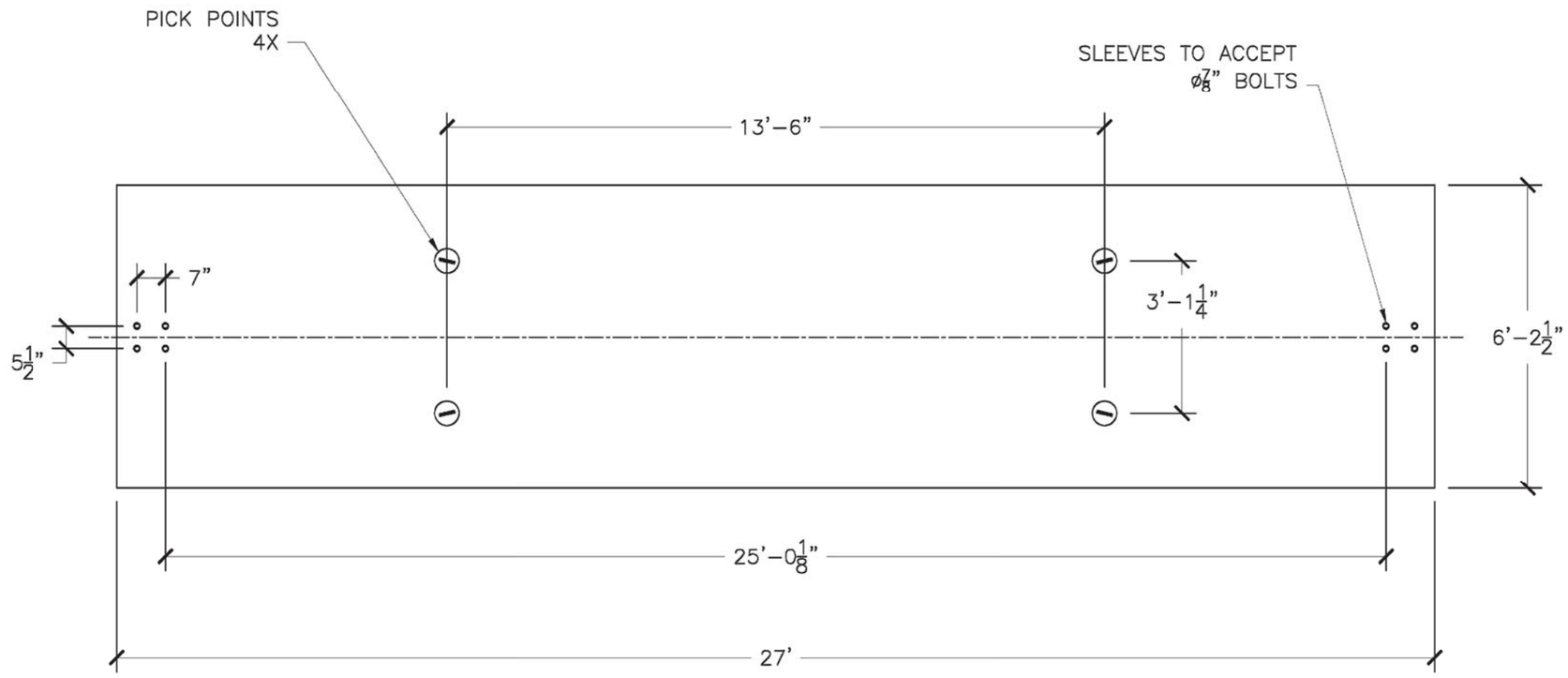

SLAB PLAN-VIEW
NOT TO SCALE

NOTE:
POCKETS TO BE FILLED WITH LOW STRENGTH GROUT OR FLOWABLE FILL AFTER INSTALLATION.

STATE OF VERMONT
RONALD K. BELL
No. 6994
REGISTERED PROFESSIONAL ENGINEER

Vermont Agency of Transportation
RECEIVED
MARLBORO BRF 010-1 (43) - TEMPORARY TRAFFIC BYPASS 4-1-14.pdf
CK'D BY RK OK'D BY
April 1, 2014
RESUBMIT NO Approved
BY KH DATE 4-8-2014

REV.			
	NO.	DATE	COMMENTS
	4	3/31/14	POCKET FILL

DATE:	3/24/2014
DRAWN BY:	A.D.
CHK'D BY:	C.E.

JOB NAME:	MARLBORO BRO 1442(35)
JOB NO:	
SHEET NAME:	SLAB PLAN
SHEET:	9

R.B.L. BERNARD BROS., INC.
BRIDGE BUILDERS & CONTRACTORS
SINCE 1926
285 FT. BINGHAM ST. VERNON VT., 05354
PH. (802) 257-7589 FAX (802) 257-7508

C:\Users\ADunklee\Documents\Works in Progress 2014\MARLBORO BRF010-1 (43)\TEMPORARY BRIDGE.dwg, 3/31/2014 11:45:20 AM

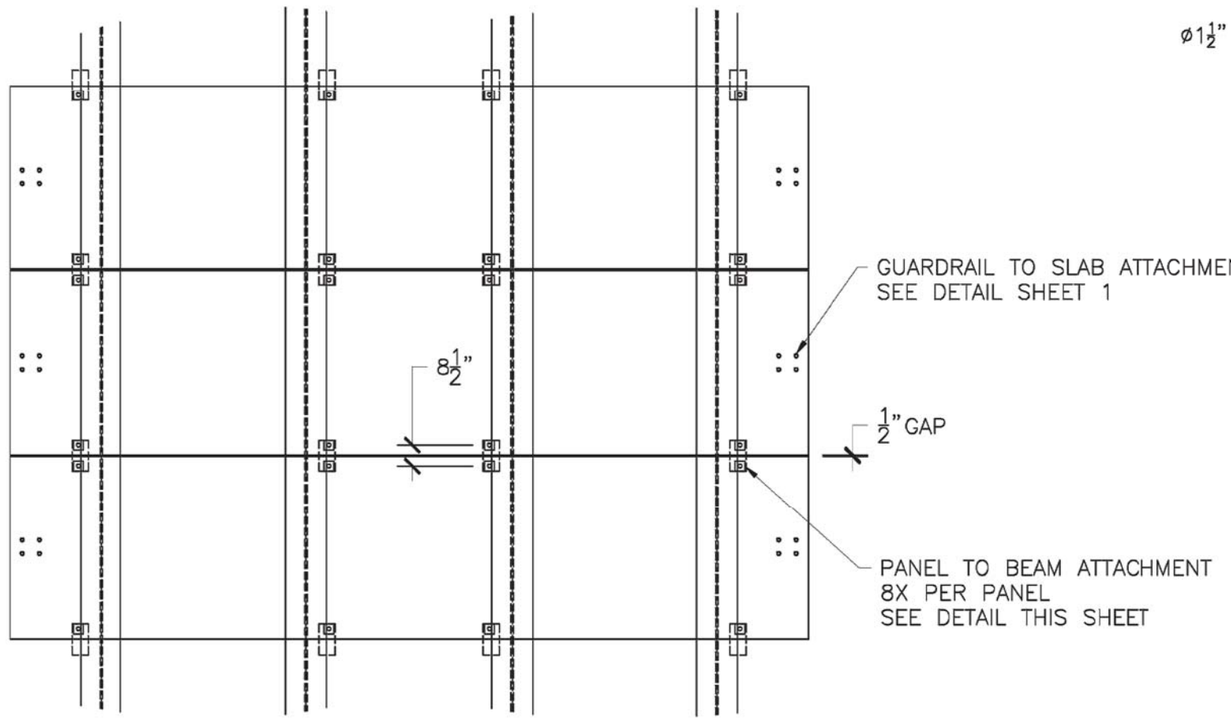

PANEL ATTACHMENT PLAN

ATTACHMENT IS DESIGNED TO ATTACH PANELS TO BEAMS, & PANELS TO EACH OTHER.

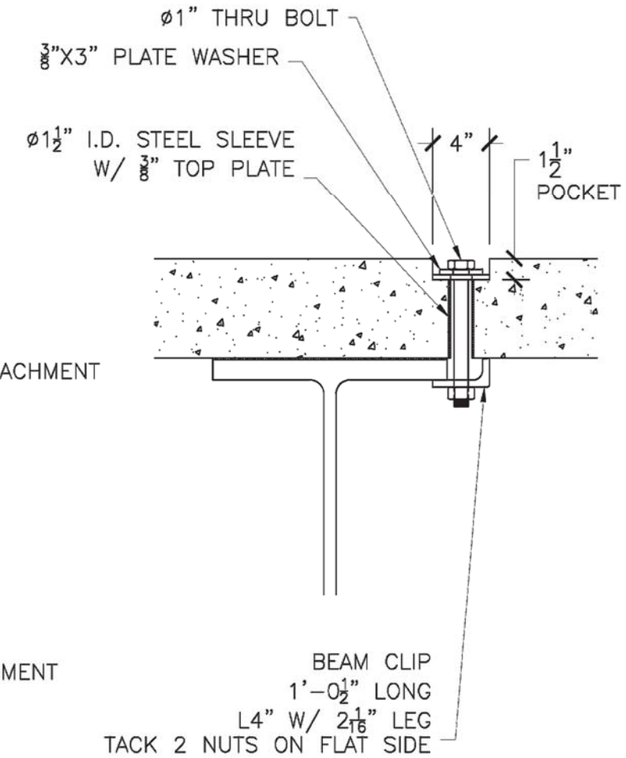

ATTACHMENT SECTION DETAIL

NOTE:

POCKETS TO BE FILLED WITH LOW STRENGTH GROUT OR FLOWABLE FILL AFTER INSTALLATION.

STATE OF VERMONT
RONALD K. BELL
No. 6994
REGISTERED PROFESSIONAL ENGINEER

Vermont Agency of Transportation
RECEIVED

CK'D BY RK OK'D BY

April 1, 2014

RESUBMIT NO Approved
BY KH DATE 4-8-2014

REV.		
NO.	DATE	COMMENTS
4	3/31/14	POCKET FILL

DATE:	3/24/2014
DRAWN BY:	A.D.
CHK'D BY:	C.E.

JOB NAME:	MARLBORO BRO 1442(35)
JOB NO:	
SHEET NAME:	SLAB ATTACHMENT DETAILS

RENAUD BROS. INC.

SHEET: 10

C:\Users\ADunklee\Documents\Works in Progress 2014\MARLBORO BRF010-1 (43)\TEMPORARY BRIDGE.dwg, 3/31/2014 11:45:20 AM

"W" BEAM GUARDRAIL WITH STEEL POSTS

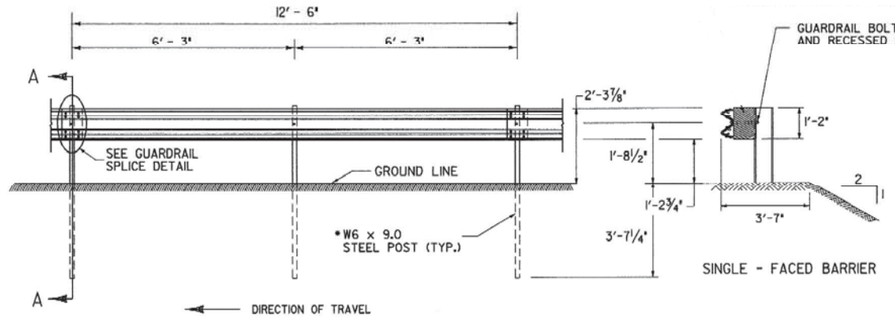

ELEVATION FROM ℄ OF ROAD

SECTION A -A

PLAN

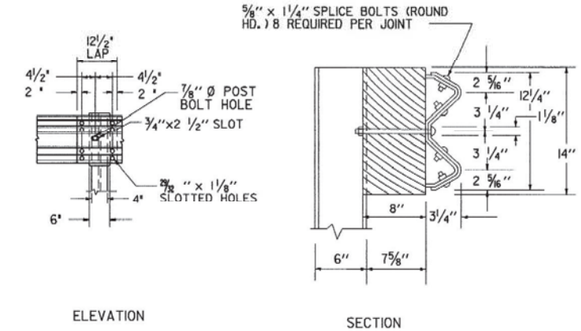

ELEVATION

SECTION

GUARDRAIL SPLICE DETAIL

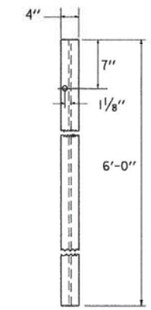

FRONT FACE STEEL POST

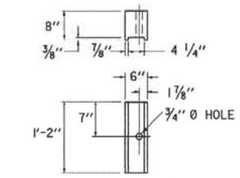

POST FACE
MODIFIED WOOD BLOCKOUT- ROUTED
6" X 8" X 1'-2"
FOR USE W/ STEEL POSTS ONLY

NOTES:
1. BLOCKS SHALL BE MADE OF TIMBER WITH A STRESS GRADE OF 1200 PSI OR MORE. TESTING SHALL BE IN ACCORDANCE WITH WEST COAST LUMBER INSPECTION BUREAU, SOUTHERN PINE INSPECTION BUREAU OR OTHER APPRPRIATE ASSOCIATION. TIMBER FOR BLOCKS SHALL BE ROUGH SAWN (UNPLANED) WITH DIMENSIONS INDICATED. THE SIZE TOLERANCE OF ROUGH SAWN BLOCKS IN THE DIRECTION OF THE BOLT HOLES SHALL BE NOT MORE THAN +/- ¼".
2. SUPPLY WOOD BLOCKS PER AASHTO M 168.
3. TREAT WITH PRESERVATIVE PER AASHTO M 133.
4. BLOCKOUTS MAY ALSO BE MADE OF APPROVED ALTERNATIVE MATERIAL.

GUARDRAIL DELINEATOR

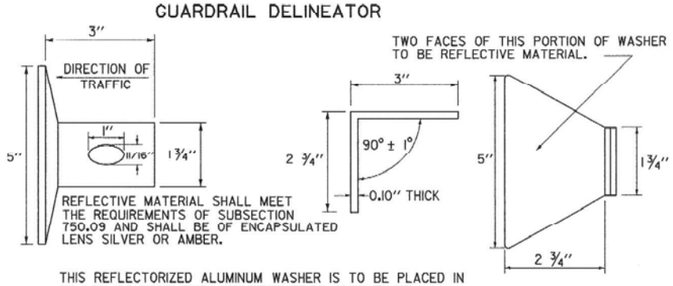

THIS REFLECTORIZED ALUMINUM WASHER IS TO BE PLACED IN VALLEY OF BEAM WHEN MOUNTING BEAM ONTO EACH FIFTH POST. WASHER SHALL MEET SPECIFICATION REQUIREMENTS FOR A.S.T.M. B-209 ALLOY 5052-H32

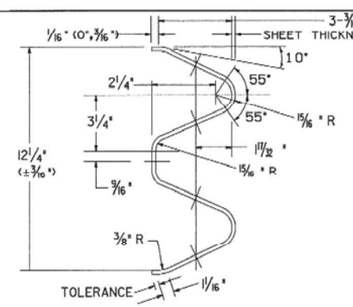

ARTBA RE-3[2@6'-3"-12'-8" CLA33 A, TYPE 12-73
TYPICAL GUARDRAIL SECTION

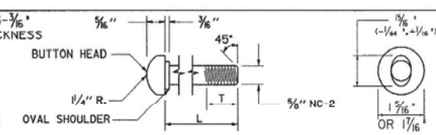

GUARDRAIL BOLT

GUARDRAIL BOLTS				FASTENER USED IN	
BOLT DES.	ARTBA REF. NO.	L	T (MIN.)	STEEL POSTS	WOOD POSTS
"A"	F-3[1¼]-76	1¼"	1"	X	X
"C"	F-3[9½]-76	9½"	1¾"	X	
"D"	F-3[18]-76	18"	2½"		X
"F"	F-3[25]-76	25"	2"		X

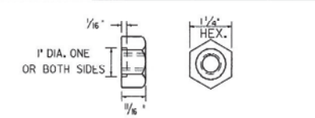

RECESSED NUT FOR GUARDRAIL BOLT

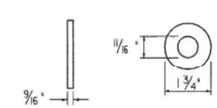

WASHER FOR 5/8" BOLTS
ARTBA F-13-73
NOTE: WASHER IS USED UNDER RECESSED NUT WHERE GUARDRAIL BOLT IS USED WITH WOOD POSTS.

GENERAL NOTES:

1. GUARDRAIL SHALL MEET THE REQUIREMENTS OF AASHTO M 180, CLASS A, TYPE I, UNLESS OTHERWISE DESIGNATED
2. GUARDRAIL SHALL BE SINGLE FACED UNLESS OTHERWISE DESIGNATED
3. GUARDRAIL SECTIONS SHALL BE LAPPED IN THE DIRECTION OF TRAFFIC FLOW FOR THE LANE NEAREST THE GUARDRAIL.
4. FOR DESCRIPTION AND SPECIFICATION OF PARTS IDENTIFIED BY (ARTBA ...) AND OTHER DETAILS OF POSTS, POST ACCESSORIES, FASTENERS & RAIL ELEMENTS, SEE AASHTO-AGC-ARTBA JOINT TASK FORCE NO. 13, TITLED "A GUIDE TO STANDARDIZED HIGHWAY BARRIER HARDWARE", LATEST EDITION.
5. STANDARD STEEL BEAM TO BE ⅛" AND THE HEAVY DUTY TO BE 5/64" THICK.

OTHER STANDARD REQUIRED G-1d

STEEL BEAM GUARDRAIL WITH STEEL POSTS
STEEL BEAM GUARDRAIL WITH WOOD POSTS

VERMONT AGENCY OF TRANSPORTATION

STANDARD

G-1

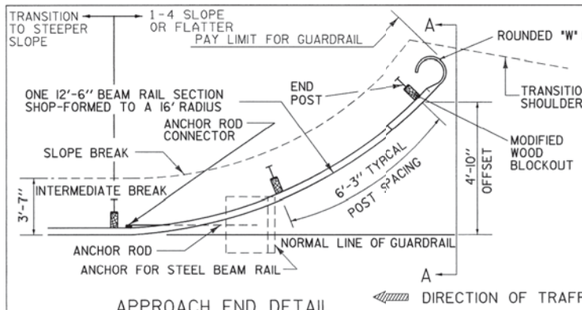

APPROACH END DETAIL

NHS APPROVED FOR USE WHERE DESIGN SPEED IS 40 OR LESS MPH

NON-NHS APPROVED FOR USE WHERE DESIGN SPEED IS 50 OR LESS MPH

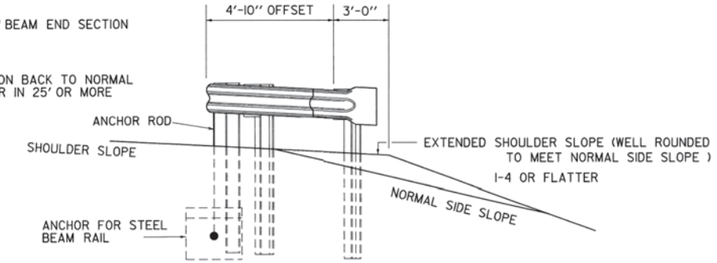

SECTION A-A

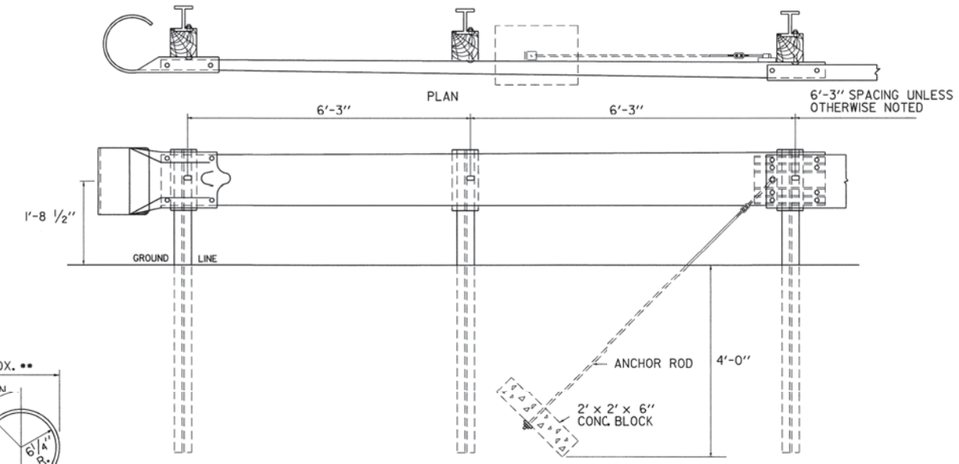

ASSEMBLY ELEVATION

TRAILING END TERMINAL FOR USE ON ONE-WAY HIGHWAYS

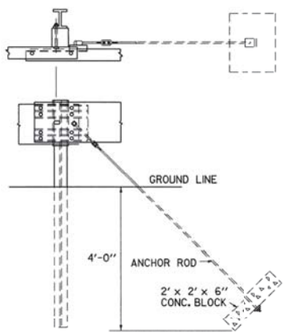

ANCHOR ROD

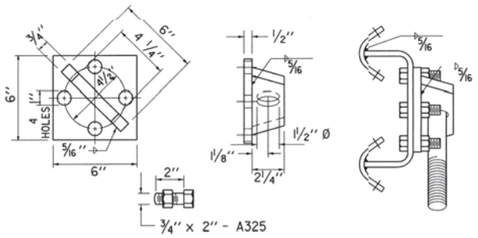

ANCHOR ROD CONNECTOR

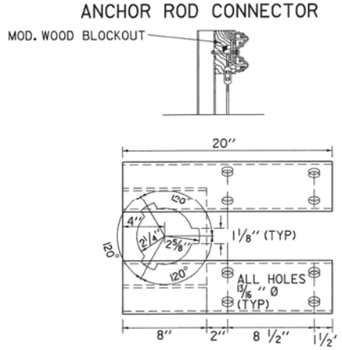

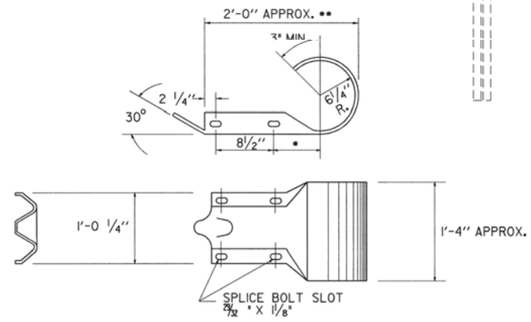

(ARTBA RE-6-79)

ROUNDED "W" BEAM END SECTION

* THIS DIMENSION IS 7 1/2" IN RE-7-79. IF THE DIMENSION IS USED IN THIS PART, IT WILL GIVE AN ACCEPTABLE OVERALL LENGTH (**) OF APPROXIMATELY 2'- 11/2."

GENERAL NOTES:

1. ALL METAL PARTS SHALL BE GALVANIZED.
2. ALL WOOD POSTS SHALL BE GIVEN A PRESERVATIVE TREATMENT.
3. DETAILS PERTINENT TO THE STANDARD INSTALLATION OF "W" BEAM SECTIONS WILL BE FOUND ON STANDARD DRAWING G-1.
4. FOR DESCRIPTION AND SPECIFICATIONS OF PARTS IDENTIFIED BY "(ARTBA..)" AND OTHER DETAILS OF POSTS, POST ACCESSORIES, FASTENERS AND RAIL ELEMENTS, SEE AASHTO-AGC-ARTBA JOINT TASK FORCE NO. 13, TITLED "A GUIDE TO STANDARDIZED HIGHWAY BARRIER HARDWARE", LATEST EDITION.

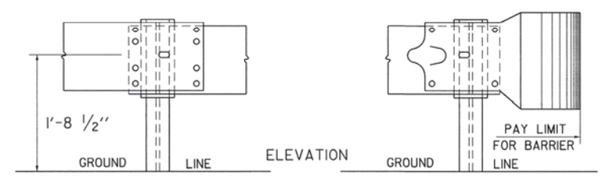

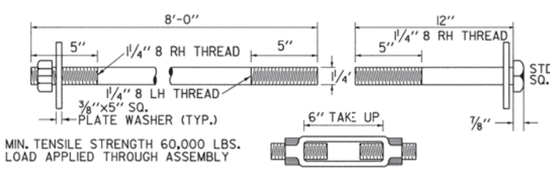

MIN. TENSILE STRENGTH 60,000 LBS. LOAD APPLIED THROUGH ASSEMBLY

TURNBUCKLE

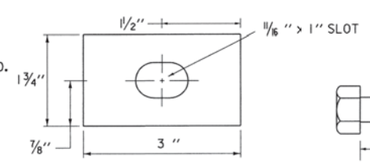

RECTANGULAR GUARDRAIL PLATE WASHER

(ARTBA F-12-73)

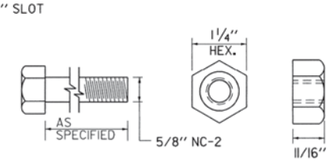

5/8" HEX NUT AND BOLT "F"

(ARTBA F-8-76)

FASTENER DETAILS

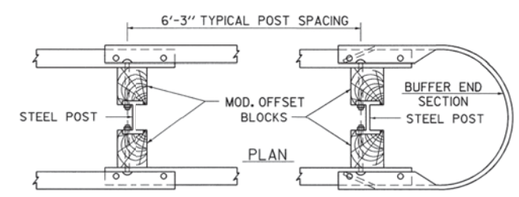

STEEL BEAM MEDIAN BARRIER

NOTE: TO BE USED OUTSIDE CLEAR ZONE ONLY.

OTHER STANDARD REQUIRED G-1

REVISIONS AND CORRECTIONS

JUNE 1, 1994 - REISSUED, WITHOUT CHANGE, UNDER NEW SIGNATURES.

JAN.3,2000 - UPDATED TO REFLECT METRIC STD. CHANGES

APPROVED

DIRECTOR OF PROJECT DEVELOPMENT

ROADWAY AND TRAFFIC DESIGN ENGINEER

STEEL BEAM GUARDRAIL APPROACH END TERMINAL
STEEL BEAM GUARDRAIL TRAILING END TERMINAL
ANCHOR FOR STEEL BEAM GUARDRAIL
STEEL BEAM MEDIAN BARRIER

VERMONT AGENCY OF TRANSPORTATION

STANDARD

G-1d

Vermont Agency of Transportation
RECEIVED
ON: April 1, 2014
and Checked for
CONFORMANCE
BY: RK DATE: 4-8-2014

BELL ENGINEERING
CONSULTING ENGINEERS
17 ECHO COVE WAY
SPOFFORD, NEW HAMPSHIRE 03462
(603) 363-9966

PROJECT NAME/ LOCATION: BRF 010-01 (43)
SHEET #: 1 OF 7
CALCULATED BY: Ron Bell DATE: 3-31-14
CHECKED BY: DATE:
SCALE:

STATE OF VERMONT
RONALD K. BELL
NO 6394
PROFESSIONAL ENGINEER

REVISED DECK CALCULATIONS

DUE TO RELATIVELY NARROW PRECAST SLAB WIDTHS THE HIGHER LOAD OF USING THE DESIGN TANDEM LOAD ON THE EQUIVALENT WIDTH STRIP OR DESIGN ACCORDING TO 4.6.2.1.4c - Transverse Edges was EVALUATED. USING THE DESIGN TRUCK ON 1/2 OF THE EQUIVALENT STRIP PRODUCED THE GREATEST LOAD.

EQUIVALENT STRIPS

$+M = 26.0 + 6.6S = 72.2''$

$-M = 48.0 + 3S = 69.0''$

1/2 EQUIVALENT STRIPS = $+M = 36.1''$; $-M = 34.5''$

multiple lane modifier

Virans temp. bridge modifier

DESIGN TRUCK LOADS = $1.2 \times 0.9 \times 1.33 \times 16$ KIPS = 22.982 KIPS

IM

(+) LOAD PER 1/2 Eq. Strip = $\frac{1}{72.2/2} \times 12 \times 22.982 = 7.661$ K-ft

(−) $\frac{1}{34.5} \times 12 \times 22.982 = 7.994$ K-ft

PATCH LOAD WIDTH = 20" + 6" = 26"

2(45° depth to neutral axis)

(+) UNIFORM LOAD OVER PATCH WIDTH = $\frac{7.661}{2.167'}$ KIPS = 3.535 KIPS/ft

(−) UNIFORM LOAD " " " = $\frac{7.994}{2.167}$ = 3.689 KIPS/ft

BELL ENGINEERING
CIVIL & ENVIRONMENTAL
17 ECHO COVE WAY
SPOFFORD, NEW HAMPSHIRE 03462
(603) 363-9966

PROJECT NAME/ LOCATION: BRF 010-01 (43)
SHEET #: 2 OF 7
CALCULATED BY: Ron Bell DATE: 3-31-14
CHECKED BY: DATE:
SCALE:

STATE OF VERMONT RONALD K BELL NO 8394 PROFESSIONAL ENGINEER

Vermont Agency of Transportation
RECEIVED
ON: April 1, 2014
and Checked for
CONFORMANCE
BY: RK DATE: 4-8-2014

FROM ENERCAL for 3.535 KIPS/ft

$+M = 6.74$ K-ft

FOR 3.685 (−) moment:

$-M @ 1/4 bf = 9.65$ K-ft

DESIGN BOTTOM REINFORCEMENT:

$$w_{DL} = \frac{(.150\ K)}{ft^2} \times 7/12 \times 1ft = 0.88\ K/ft$$

$$M_{DL} = \frac{0.088\ K/ft \times (6.948)^2}{10} = 0.425\ K\text{-}FT$$

$$M_{strength\ I} = (1.25)(0.425) + (1.75)(6.74)$$

$$= 12.326\ K\text{-}ft = 147.912\ K\text{-}in$$

$$\phi M_N = \phi \left[A_s f_y \left(d_s - 1/2 \frac{A_s f_y}{0.85 f'_c b}\right)\right] \geq M_{STRENGTH\ I)}$$

$\phi = 0.9$

$f_y = 60$ KSI

$f'_c = 5$ KSI

$d_s = 7'' - (1''\ cover - 0.5\ (0.625))$

$= 5.687''$

Try #5 bars @ 7" O.C.

$$0.9\left[(0.531(60))\left(5.677 - 1/2 \frac{(.531)(60)}{0.85 \times 5 \times 12}\right)\right] = 154.1\ K\text{-}in > 147.9$$

OK

BELL ENGINEERING
CIVIL & ENVIRONMENTAL
17 ECHO COVE WAY
SPOFFORD, NEW HAMPSHIRE 03462
(603) 363-9966

PROJECT NAME/ LOCATION: BRF 010-01 (43)
SHEET #: 3 OF 7
CALCULATED BY: Ron Bell DATE: 3-31-14
CHECKED BY: DATE:
SCALE:

STATE OF VERMONT RONALD K BELL NO 6694 PROFESSIONAL ENGINEER

DESIGN NEGATIVE REINFORCEMENT

FROM POSITIVE CALC $w_{DC} = 0.088$ K-ft

SPAN LENGTH FOR NEGATIVE: REDUCES + 1/2 $B_f \approx 6.5'$

$$M_{DC} = (1/10)(0.088\ K/ft)(6.5)^2 = 0.372\ K\text{-}ft$$

From Enercalc

FACTORED MOMENTS: $(1.25)(0.372) + (1.75)(9.65)$

$$= 17.353\ K\text{-}ft = 208.230\ K\text{-}in$$

$$\phi M_n = \phi\left[(A_s)(f_y)\left(d_s - \frac{1}{2}\frac{A_s f_y}{0.85 f'_c b}\right)\right] \geq M \text{ strength I}$$

$\phi = 0.9$
$f_y = 60$ KSI
$f'_c = 5$ KSI

broom finish

$d_s = 7' - 2''$ cover $+ 0.25'') - 0.5(.625) = 5.063''$
$b = 12''$

TRY #5 bars @ 4.5" O.C. $A_s = 0.827\ in^2$

$$0.9\left[(0.827)(60)\left(5.063 - \frac{1}{2}\frac{(0.827)(60)}{0.85 \times 5 \times 12}\right)\right]$$

$= 204.387$ K-ft N.G.

TRY #5 bars 4" O.C.

$\phi M_N = 226.79$ K-in > 208.230 K-in OK

Vermont Agency of Transportation
RECEIVED
ON: April 1, 2014
and Checked for
CONFORMANCE
BY: RK DATE: 4-8-2014

BELL ENGINEERING
CIVIL & ENVIRONMENTAL
17 ECHO COVE WAY
SPOFFORD, NEW HAMPSHIRE 03462
(603) 363-9966

PROJECT NAME/ LOCATION: BRF 010(01)-43
SHEET #: 4 OF 7
CALCULATED BY: Ron Bell DATE: 3-31-14
CHECKED BY: DATE:
SCALE:

DISTRIBUTION REINFORCEMENT IN BOTTOM

PE 9.7.3.2 = 0.67 % = (0.531)(67) = 0.356

≈ 12" o.c.

NOTE: TOP LONGITUDINAL STEEL ONLY NEED TO MEET TEMP + SHRINKAGE REQUIREMNTS

∴ #5 bars @ 12" o.c. OK

SUMMARY:

BOTTOM BARS PERPINDICULAR TO BEAMS = #5 @ 7" o.c

TOP BARS PERPINDICULAR TO BEAM = #5 @ 4" o.c.

Top + Bottom Bars Parallel to Beam = #5 @ 12 o.c.

Top Clear = 2.0"

BOTTOM CLEAR = 1.0"

STATE OF VERMONT
RONALD K BELL
NO 6894
PROFESSIONAL ENGINEER

Vermont Agency of Transportation
RECEIVED
ON: April 1, 2014
and Checked for
CONFORMANCE
BY: RK DATE: 4-8-2014

BELL ENGINEERING
CIVIL & ENVIRONMENTAL
17 ECHO COVE WAY-SPOFFORD, NH 03462
(603) 363-9966

Project Title: Marlboro BRF 010-01(43)
Engineer: Ron Bell
Project Descr: Deck Design moment calcuation
Project ID: 2014-011

POSITIVE MOMENT

5/7

Printed: 31 MAR 2014, 8:19AM

General Beam Analysis

File = C:\Users\Ron\DOCUME~1\ENERCA~1\MAA450~1.EC6
ENERCALC, INC. 1983-2013, Build:6.13.8.31, Ver:6.13.12.31

Lic. # : KW-06009396 Licensee : Bell Engineering

Description : Calculation of moment using Equivalent width. Wheel spacing = 6'.

General Beam Properties

Elastic Modulus	29,000.0 ksi						
Span #1	Span Length =	7.0 ft	Area =	10.0 in^2	Moment of Inertia =	100.0	in^4
Span #2	Span Length =	7.0 ft	Area =	10.0 in^2	Moment of Inertia =	100.0	in^4

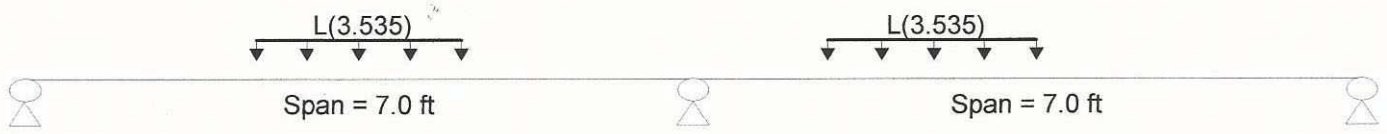

Applied Loads

Service loads entered. Load Factors will be applied for calculations.

Load for Span Number 1
Uniform Load : L = 3.535 k/ft, Extent = 2.417 -->> 4.584 ft, Tributary Width = 1.0 ft
Load for Span Number 2
Uniform Load : L = 3.535 k/ft, Extent = 1.420 -->> 3.587 ft, Tributary Width = 1.0 ft

DESIGN SUMMARY

Maximum Bending =	9.718 k-ft	Maximum Shear =	6.309 k
Load Combination	L Only	Load Combination	L Only
Location of maximum on span	7.000ft	Location of maximum on span	7.000 ft
Span # where maximum occurs	Span # 1	Span # where maximum occurs	Span # 1

Maximum Deflection

Max Downward L+Lr+S Deflection	0.014 in
Max Upward L+Lr+S Deflection	0.000 in
Max Downward Total Deflection	0.014 in
Max Upward Total Deflection	0.000 in

Maximum Forces & Stresses for Load Combinations

Load Combination		Max Stress Ratios		Summary of Moment Values							Summary of Shear Values		
Segment Length	Span #	M	V	Mmax +	Mmax -	Ma - Max	Mnx	Mnx/Omega	Cb	Rm	Va Max	Vnx	Vnx/Omega
Overall MAXimum Envelope													
Dsgn. L = 7.00 ft	1			6.74	-9.72	9.72					6.31		
Dsgn. L = 7.00 ft	2			4.87	-9.72	9.72					6.31		
L Only													
Dsgn. L = 7.00 ft	1			6.74	-9.72	9.72					6.31		
Dsgn. L = 7.00 ft	2			4.87	-9.72	9.72					6.31		

Overall Maximum Deflections - Unfactored Loads

Load Combination	Span	Max. "-" Defl	Location in Span	Load Combination	Max. "+" Defl	Location in Span
D+L	1	0.0140	3.123		0.0000	0.000
D+L	2	0.0102	3.662		0.0000	0.000

Vertical Reactions - Unfactored

Support notation : Far left is #1 Values in KIPS

Load Combination	Support 1	Support 2	Support 3
Overall MAXimum	2.441	11.528	1.351
L Only	2.441	11.528	1.351
D+L	2.441	11.528	1.351

STATE OF VERMONT
RONALD K BELL
NO 6094
PROFESSIONAL ENGINEER

Vermont Agency of Transportation
RECEIVED
ON: April 1, 2014
and Checked for
CONFORMANCE
BY: RK DATE: 4-8-2014

BELL ENGINEERING
CIVIL & ENVIRONMENTAL
17 ECHO COVE WAY-SPOFFORD, NH 03462
(603) 363-9966

Project Title: Marlboro BRF 010-01(43)
Engineer: Ron Bell
Project Descr: Deck Design moment calcuation
Project ID: 2014-011

NEGATIVE MOMENT

6/7

Printed: 31 MAR 2014, 5:24PM

General Beam Analysis

File = c:\Users\Ron\DOCUME~1\ENERCA~1\MAA1F7~1.EC6
ENERCALC, INC. 1983-2013, Build:6.13.8.31, Ver:6.13.12.31

Lic. # : KW-06009396 Licensee : Bell Engineering

Description : Calculation of moment using Equivalent width. Wheel spacing = 6'.

General Beam Properties

Elastic Modulus 29,000.0 ksi

Span #1	Span Length =	7.0 ft	Area =	10.0 in^2	Moment of Inertia =	100.0 in^4
Span #2	Span Length =	7.0 ft	Area =	10.0 in^2	Moment of Inertia =	100.0 in^4

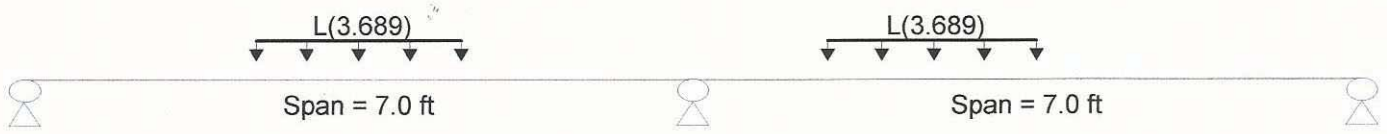

Applied Loads

Service loads entered. Load Factors will be applied for calculations.

Load for Span Number 1
Uniform Load : L = 3.689 k/ft, Extent = 2.417 -->> 4.584 ft, Tributary Width = 1.0 ft
Load for Span Number 2
Uniform Load : L = 3.689 k/ft, Extent = 1.420 -->> 3.587 ft, Tributary Width = 1.0 ft

DESIGN SUMMARY

Maximum Bending =	10.142 k-ft	Maximum Shear =	6.584 k
Load Combination	L Only	Load Combination	L Only
Location of maximum on span	7.000ft	Location of maximum on span	7.000 ft
Span # where maximum occurs	Span # 1	Span # where maximum occurs	Span # 1

Maximum Deflection

Max Downward L+Lr+S Deflection	0.015 in
Max Upward L+Lr+S Deflection	0.000 in
Max Downward Total Deflection	0.015 in
Max Upward Total Deflection	0.000 in

Maximum Forces & Stresses for Load Combinations

Load Combination		Max Stress Ratios		Summary of Moment Values							Summary of Shear Values		
Segment Length	Span #	M	V	Mmax +	Mmax -	Ma - Max	Mnx	Mnx/Omega	Cb	Rm	Va Max	Vnx	Vnx/Omega
Overall MAXimum Envelope													
Dsgn. L = 7.00 ft	1			7.04	-10.14	10.14					6.58		
Dsgn. L = 7.00 ft	2			5.08	-10.14	10.14					6.58		
L Only													
Dsgn. L = 7.00 ft	1			7.04	-10.14	10.14					6.58		
Dsgn. L = 7.00 ft	2			5.08	-10.14	10.14					6.58		

Overall Maximum Deflections - Unfactored Loads

Load Combination	Span	Max. "-" Defl	Location in Span	Load Combination	Max. "+" Defl	Location in Span
D+L	1	0.0146	3.123		0.0000	0.000
D+L	2	0.0106	3.662		0.0000	0.000

Vertical Reactions - Unfactored

Support notation : Far left is #1 Values in KIPS

Load Combination	Support 1	Support 2	Support 3
Overall MAXimum	2.548	12.030	1.410
L Only	2.548	12.030	1.410
D+L	2.548	12.030	1.410

STATE OF VERMONT
RONALD K. BELL
NO 6604
PROFESSIONAL ENGINEER

Vermont Agency of Transportation
RECEIVED
ON: April 1, 2014
and Checked for
CONFORMANCE
BY: RK DATE: 4-8-2014

BELL ENGINEERING
CIVIL & ENVIRONMENTAL
17 ECHO COVE WAY-SPOFFORD, NH 03462
(603) 363-9966

Project Title: Marlboro BRF 010-01(43)
Engineer: Ron Bell
Project Descr: Deck Design moment calcuation
Project ID: 2014-011

7/7

NEGATIVE MOMENT

Printed: 31 MAR 2014, 5:24PM

General Beam Analysis

File = c:\Users\Ron\DOCUME~1\ENERCA~1\MAA1F7~1.EC6
ENERCALC, INC. 1983-2013, Build:6.13.8.31, Ver:6.13.12.31

Lic. # : KW-06009396 | Licensee : Bell Engineering

Description : Calculation of moment using Equivalent width. Wheel spacing = 6'.

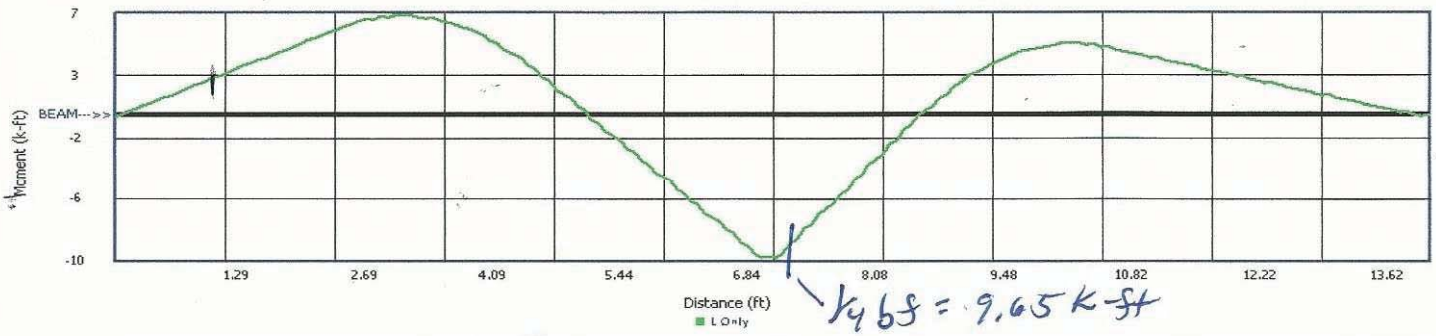

1/4 bf = 9.65 k-ft

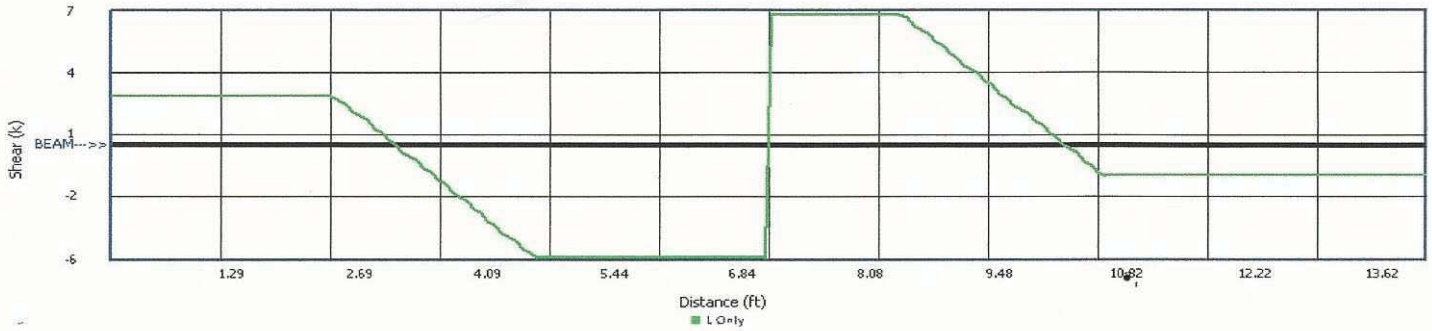

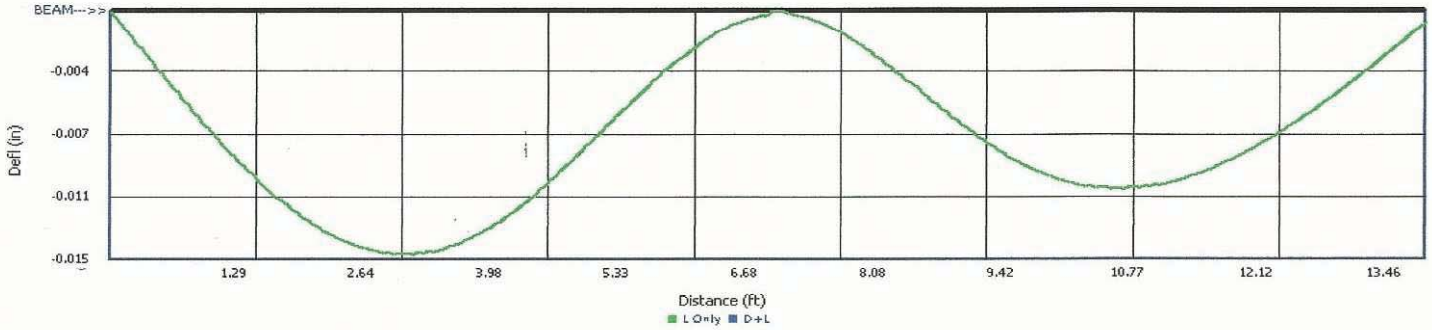

STATE OF VERMONT
RONALD K. BELL
NO 6566
PROFESSIONAL ENGINEER

Vermont Agency of Transportation
RECEIVED
ON: April 1, 2014
and Checked for
CONFORMANCE
BY: RK DATE: 4-8-2014

PRECAST CONC. DECK ON W BEAMS

BELL ENGINEERING
CIVIL & ENVIRONMENTAL
17 ECHO COVE WAY
SPOFFORD, NEW HAMPSHIRE 03462
(603) 363-9966

PROJECT NAME/ LOCATION: Manl. BRF 010-1(43)
SHEET #: 1 OF 22
CALCULATED BY: Ron Bell DATE: 3-11-14
CHECKED BY: DATE:
SCALE: NTS

STATE OF VERMONT
RONALD K. BELL
NO 8024
PROFESSIONAL ENGINEER

TEMPORARY DECK DESIGN

FROM 9.7.5 - PRECAST DECK ON GIRDERS

MIN. DEPTH = 7.0"

9.7.2.5 - REINFORCEMENT REQUIREMENTS
MIN. BOT LAYER = 0.27 in^2/ft
MIN. TOP LAYER = 0.18 in^2/ft^2

FOR ABSOLUTE MIN. 7.0" DECK COVER REQ =
2.0" TOP
1.0" BOTTOM } TO PROVIDE 4" CORE

SEE REVISED DECK CALCULATIONS
DATED 3-31-2014

DECK PANELS ARE CONNECTED ON EACH SIDE TO STEEL WT SECTION (W) 4 BOLTS THROUGH GUARD RAIL PLATE.

TO CHECK CONNECTION FORCES ASSUME REAR AXLE IS ON EDGE SUCH THAT THE WEIGHT OF THE ENTIRE AXLE IS 1' FROM EDGE OF GUARD RAIL:

R DECK = 27 × 7/12 × 6.208 × 150 = 17,677 #S

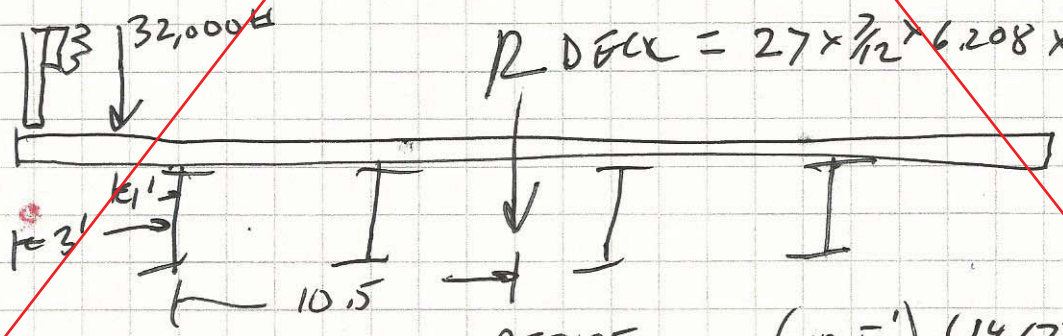

$$FS = \frac{M\ RESIST}{M\ OVERTURN} = \frac{(10.5')(14,677\#)}{(1')(32,000\#)} = 4.816$$

∴ DECK WEIGHT SUFFICIENT TO HOLD PANELS IN PLACE AND CONNECTIONS @ GUARD RAIL PROVIDE ADDITIONAL FS.

BELL ENGINEERING
CIVIL & ENVIRONMENTAL
17 ECHO COVE WAY
SPOFFORD, NEW HAMPSHIRE 03462
(603) 363-9966

PROJECT NAME/ LOCATION: Marlboro BRF 010-1-(43)
SHEET #: 2 OF 22
CALCULATED BY: Ron Bell DATE: 3-11-14
CHECKED BY: DATE:
SCALE:

DESIGN STRENGTH: $f_c' = 5{,}000$ PSI ; $f_y = 60$ KSI

DESIGN DECK FOR STRENGTH I LIMIT STATE

BEAM SPACING = 6'-11 3/8" = 6.948'

$$W_{DC} = \frac{(150\ K)}{ft^2} \times \frac{7''}{12''/ft} \times (1\ ft) = 0.088\ K/ft$$

$$M_{DC} = \frac{0.088\ K/ft \times (6.948)^2}{10} = 0.425\ K\text{-}ft/ft$$

FROM APPENDIX 4 $M_{LL+IM} = 5.21$ K-ft/ft

$$M_{Strength\ I} = (1.25)(0.425) + 1.75(5.21)$$

SEE REVISED DECK CALCULATIONS
DATED 3-31-2014

$= 9.536$ m-KIP

$$\phi M_n = \phi\left[A_s f_y \left(d_s - \frac{1}{2}\frac{A_s f_y}{0.85 f_c' b}\right)\right] \geq M_{str.\ I}$$

$\phi = 0.9$
$f_y = 60$ KSI
$f_c' = 5$ KSI
$d_s = 7'' - (1''\ \text{cover} - 0.5 \times 0.625'')$
$= 5.687''$

STATE OF VERMONT
RONALD K BELL
NO 8884
PROFESSIONAL ENGINEER

BRF 010-1-(43)

BELL ENGINEERING
CIVIL & ENVIRONMENTAL
17 ECHO COVE WAY
SPOFFORD, NEW HAMPSHIRE 03462
(603) 363-9966

PROJECT NAME/ LOCATION: ~~BRF 014-2(35)~~
SHEET #: 3 OF ~~9~~ 22
CALCULATED BY: Ron Bell DATE: 2-20-14 & 3-11-14
CHECKED BY: DATE:
SCALE:

SOLVE FOR As for Positive Reinforcement

BY TRIAL AND ERROR: TRY #5 bar @ 9" o.c.

$= (12/9)(3.14)(\frac{.625}{2})^2 = 0.409 \text{ in}^2$

$0.9\left[(0.409 \times 60)\left(5.687 - \frac{1}{2}\frac{0.409 \times 60}{0.85 \times 5 \times 12}\right)\right]$

$= 120.289 \text{ K-in} > \cancel{114.50}\ 115.536 \text{ Kin}$ OK

BUT TRY #5 Bars @ 10" o.c.

$A = (12/$ [illegible] $.368$

SEE REVISED DECK CALCULATIONS
DATED 3-31-2014

$0.9\left[((0.368)(60))\left(5.687 - \frac{1}{2}\frac{0.368 \times 60}{(0.85)(5)(12)}\right)\right]$

$= 120.789 > \cancel{114.50}\ 115.536$ OK

TRY 12" o.c. $A_s = 0.307$

$0.9\left[(0.307)(60)\left(5.687 - \frac{1}{2}\frac{0.307 \times 60}{(0.85)(5)(12)}\right)\right]$

$= 101.4 << \cancel{114.50}\ 115.536$ NG

PICK #5 bars @ 10" o.c.

BRF 010-1 (43)

BELL ENGINEERING
CIVIL & ENVIRONMENTAL
17 ECHO COVE WAY
SPOFFORD, NEW HAMPSHIRE 03462
(603) 363-9966

PROJECT NAME/ LOCATION: ~~1442 (35)~~
SHEET #: 4 OF 22
CALCULATED BY: Ron Bell DATE: 2-24-14 3-11-14
CHECKED BY: DATE:
SCALE:

STATE OF VERMONT RONALD K. BELL No. 6034 REGISTERED PROFESSIONAL ENGINEER

CHECK CRACK CONTROL

$$S \le \frac{700\gamma_e}{\beta_s f_s} - 2d_c$$

S = spacing of reinforcement closest to tension face

where: $\beta_s = 1 + \frac{d_c}{0.7(h-d_c)}$

where $d_c = 1.0''$ clen $+ 0.5 \times 0.625$ in bar
$= 1.3125$ in.

$h = 7''$

SEE REVISED DECK CALCULATIONS
DATED 3-31-2014

$\therefore \beta_s = \frac{\quad}{(0.7)(7-1.3125)} = 1.330$

$\Downarrow$
5.688

$\gamma_e = 0.75$

$$f_s = \frac{M_{service}}{A_s j d_s}$$

$f_s =$

$$K = \sqrt{((.005)(7))^2 + (2)(.005)(7)} - (.005)(7)$$

$= 0.036$

$j = 1 - \frac{K}{3} = 1 - \frac{0.036}{3}$
$= 0.988$

Where;

$A_s = 0.368 \text{ in}^2$

$j = 1 - \frac{K}{3}$

$K = \sqrt{(\rho n)^2 + 2\rho n} - \rho n$

$\rho = \frac{A_s}{b d_s} = \frac{0.368 \text{ in}^2}{(12'')(5.687)''}$
$= 0.005$

$n = \frac{E_s}{E_c} = 7$ for
$4.6 \le f'_c \le 6.0$ C.C.10.1.1b

BELL ENGINEERING
CIVIL & ENVIRONMENTAL
17 ECHO COVE WAY
SPOFFORD, NEW HAMPSHIRE 03462
(603) 363-9966

PROJECT NAME/ LOCATION: BRF 010-1(43) ~~1442(38)~~
SHEET #: 5 OF 22
CALCULATED BY: Ron Bell DATE: 2-20-14 & 3-11-14
CHECKED BY: DATE:
SCALE:

$\gamma_{ie} = 0.75$ for decks exposed to water

$M_{service\ I} = 1.0\,(DC + LL + IM)$

$= 0.425 + 5.21$

$= 5.635$ K-FT

$= 67.620$ K-IN

$$f_s = \frac{67.620 \text{ K-IN}}{(0.368 \text{ in}^2)(0.88)(5.687)''} = 32.203 \text{ KSI}$$

SEE REVISED DECK CALCULATIONS
DATED 3-31-2014

$$S \le \frac{(700)(0.75)}{(1.330)(32.203)} \text{ in} - (2)(1.3125) \text{ in} =$$

$$\le 12.043 - 2.625 = 9.418$$

10" ≥ 9.418 in N.G.

∴ MODIFY SPACING TO PROVIDE

#5 bars @ 9" O.C.

STATE OF VERMONT
RONALD K. BELL
No. 6936
REGISTERED PROFESSIONAL ENGINEER

BELL ENGINEERING
CIVIL & ENVIRONMENTAL
17 ECHO COVE WAY
SPOFFORD, NEW HAMPSHIRE 03462
(603) 363-9966

PROJECT NAME/ LOCATION: BRF 010-1 (43) ~~(42)~~
SHEET #: 6 OF 22
CALCULATED BY: Ron Bell DATE: 2-20-14 & 3-11-14
CHECKED BY: DATE:
SCALE:

STATE OF VERMONT RONALD R. BELL NO. 6334 REGISTERED PROFESSIONAL ENGINEER

CHECK MIN. REINFORCEMENT

$M_r > M_{CR}$

$M_{CR} = \gamma_3 \gamma_1 S f_r$ (K-in)

$S = \frac{1}{6} bh^2 = \frac{1}{6}(12")(7)^2 = 98 \text{ in}^3$

$f_r = 0.25\sqrt{f'_c} = 0.24\sqrt{5.0 \text{ ksi}} = 0.537 \text{ ksi}$

$\gamma_3 = 0.75$ for grade 60.

$\gamma_1 = 1.6$

SEE REVISED DECK CALCULATIONS
DATED 3-31-2014

$M_{CR} = (0.75)(1.6)(98)(0.537) = 63.151$ K-in

$M_r = \phi M_N = 120.289$ (see pg. 3 for trial with #5 @ 9" o.c.)

$120.289 > 63.151$ ∴ OK

BELL ENGINEERING
CIVIL & ENVIRONMENTAL
17 ECHO COVE WAY
SPOFFORD, NEW HAMPSHIRE 03462
(603) 363-9966

PROJECT NAME/ LOCATION: BRF 010-1(43) ~~LHHL (35)~~
SHEET #: 7 OF 22
CALCULATED BY: Ron Bele DATE: 2-20-14 & 3-11-14
CHECKED BY: DATE:
SCALE:

Negative Reinforcement

From "Positive calculations $w_{DC} = 0.088$ k/ft

= Span length: Reduce by ½ flange width = 6.5'

$M_{DC} = \left(\frac{1}{10}\right)(0.088\ k/ft)(6.5)^2 = 0.372$ k-ft

LL+IM moments from A-4 (Note 4.6.2.1.6)

for negative moments taken as ¼ flange width from c/L of support: $\frac{16.5}{4} = 4.38''$ use 3" from table

∴ M_{LL+IM} SEE REVISED DECK CALCULATIONS DATED 3-31-2014

Factored moment = $\gamma_i \left[1.0 (M_D + 1.75 M_{LL+IM})\right]$ = 9.513 k-ft ~~= 9.420 k-ft~~ ~~= 113.03 k-in~~ = 114.150 k-in

Design for Moment Capacity

$$\phi M_n = \phi\left[A_s f_y \left(d_s - \frac{1}{2}\frac{A_s f_y}{0.85 f'_c b}\right)\right] \geq M_{strength\,I} (113.037)$$

$\phi = 0.9$

$f_y = 60$ KSI

$f'_c = 5$ KSI

To account for broom finish

$d_s = 7''$ slab $- (2'' + 0.25''$ cover$) - 0.5 \times 0.625$ bar $= 5.063''$

$b = 12$ in

BRF 010-1(43)

BELL ENGINEERING
CIVIL & ENVIRONMENTAL
17 ECHO COVE WAY
SPOFFORD, NEW HAMPSHIRE 03462
(603) 363-9966

PROJECT NAME/ LOCATION: ~~1442(35)~~
SHEET #: 8 OF 22
CALCULATED BY: Ron Bell DATE: 2-20-1413-11-14
CHECKED BY: DATE:
SCALE:

TRY, #5 bars @ #5 bars @ 9" O.C. $A_s = 0.409 in^2$

$$= 0.9\left[(0.409 \times 60)\left(5.063 - \left(\tfrac{1}{2}\right)\left(\frac{0.409 \times 60}{(0.85)(5)12}\right)\right)\right]$$

$= 118.342$ K-in > ~~143.034~~ K-in OK
~~143.034~~ K-in
114.150

Check Cracking for Negative Moment

$$s \le \frac{700\gamma_e}{\beta_s f_s} - 2d_c$$

where

$$\beta_s = \frac{1 + d_c}{0.7(h - d_c)}$$

SEE REVISED DECK CALCULATIONS
DATED 3-31-2014

$$\rho = \frac{A_s}{b d_s} = \frac{0.409}{(12 in)(5.063)}$$

$= 0.007$

where $d_c =$
$(2.0 + 0.25)$ in clear $+ 0.5 \times 0.625$
$= 2.563$ in

$n = 7''$

$n = 7$ from C 6.10.1.1b
for $4.6 \le f'_c \le 6.0$

$$\therefore \beta_s = 1 + \frac{2.563}{0.7(7 - 2.563)}$$

$= 1.825$

$$K = \sqrt{[(.007)(7.0)]^2 + (2)(.007)(7.0)} - (.007)(7)$$

$= 0.226$

$\gamma_e = 0.75$

$f_s = M_{service} I = 1(1.0 M_{DC} + 1.0 M_{LL+IM}) f_s = \frac{M_{service} I}{A_s j d_s}$

$= 5.542$ K-ft
$= 66.504$ K-IN

$A_s = 0.409$

$j = 1 - \frac{K}{3}$

$K = \sqrt{(\rho n)^2 + 2\rho n} - \rho n$

$j = 1 - \frac{0.226}{3} = 0.925$

BELL ENGINEERING
CIVIL & ENVIRONMENTAL
17 ECHO COVE WAY
SPOFFORD, NEW HAMPSHIRE 03462
(603) 363-9966

PROJECT NAME/ LOCATION: BRF 010-1(43) ~~BRO 1442 (35~~
SHEET #: 9 OF 22
CALCULATED BY: Ron Bell DATE: 2-20-14 3-11-14
CHECKED BY: DATE:
SCALE:

$$f_s = \frac{M_{service}}{A_s j d_s} = \frac{66.504 \text{ k-in}}{(.409 \text{ in}^2)(0.925)(5.063)}$$

$$= 34,720 \text{ KSI}$$

$$s \le \frac{700 \phi_e}{\phi_s f_s} - 2d_c$$

$$s \le \frac{(700)(0.75)}{(1.825)(34.720)} - (2)(2.563) = 3.158 \text{ in}$$

$9'' > 3.158''$ No.6

TRY #5 bars @ 6" c to c spacing. $A_s = 0.62 \text{ in}^2$

SEE REVISED DECK CALCULATIONS
DATED 3-31-2014

$$\rho = \frac{0.62}{(12)(5.063)}$$

$$K = \sqrt{[(.01)(7.0)]^2 + (2)(.01)(7)} - (.01)(7) = 0.274$$

$$j = 1 - \frac{K}{3} = 0.909$$

$$f_s = \frac{M_{service}}{A_s j d_s} = \frac{66.504}{(0.62)(0.909)(5.063)} = 23.307 \text{ KSI}$$

$$s \le \frac{(700)(0.75)}{(1.825)(23.307)} - (2)(2.563) = 7.217$$

$6'' < 7.217$ OK

Distribution Reinforcement = 0.67% of Primary
as per 9.7.3.2 for bottom Bars

∴ #5 bars @ 12" O.C.

NOTE: Top Longitudinal steel only needs to meet temp. + shrinkage ∴ #5 @12" O.C adequate

BEAM CALCULATIONS:

BELL ENGINEERING
CIVIL & ENVIRONMENTAL
17 ECHO COVE WAY
SPOFFORD, NEW HAMPSHIRE 03462
(603) 363-9966

PROJECT NAME/ LOCATION: 010-(17)(43)
SHEET #: 10 OF 22
CALCULATED BY: Ron Bell DATE: 2-6-2014 + 3-11-14
CHECKED BY: DATE:
SCALE:

TEMPORARY BRIDGE CALCULATIONS
STEEL BEAMS (NOT A COMPOSITE DESIGN)

BEAMS @ 36x260 WITH 1x14 PLATE ON BOTT FLANGE
SEE SECTION CALCULATION
$A = 90.50 \text{ in}^2$
$S_x = 1317.61 \text{ in}^3$
$Z_x = 1515.0 \text{ in}^3$

DECK ACTS @ DL ONLY

DESIGN = HL 93 SPAN FROM ℄ + ℄ BEARING = 76'

DESIGN TRUCK MOMENT > DESIGN TANDEM

DESIGN TRUCK =

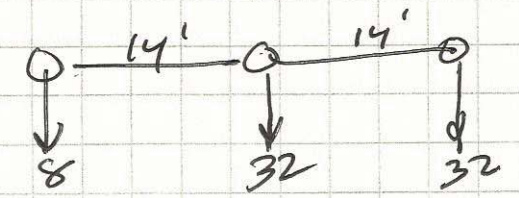

FROM BALANCE POINT OF DESIGN TRUCK
LOADS ACT 19.33' (FRONT), 33.77' + 47.33'

LOAD DISTRIBUTION

UNIFORM LANE LOAD = $S/10 = \frac{7.0}{10} = 0.70 \times 0.64 = 0.448$ K/ft

WHEEL LOADS:

FOR EXTERIOR BEAMS (WORST CASE)

TABLE 4.6.2.2.2d-1 USE LEVER RULE

STATE OF VERMONT
RONALD K. BELL
NO 8884
PROFESSIONAL ENGINEER

BELL ENGINEERING
CIVIL & ENVIRONMENTAL
17 ECHO COVE WAY
SPOFFORD, NEW HAMPSHIRE 03462
(603) 363-9966

PROJECT NAME/ LOCATION: BRF 010-01 (43)
SHEET #: 11 OF 22
CALCULATED BY: Ron Bell DATE: 3-11-14
CHECKED BY: DATE:
SCALE:

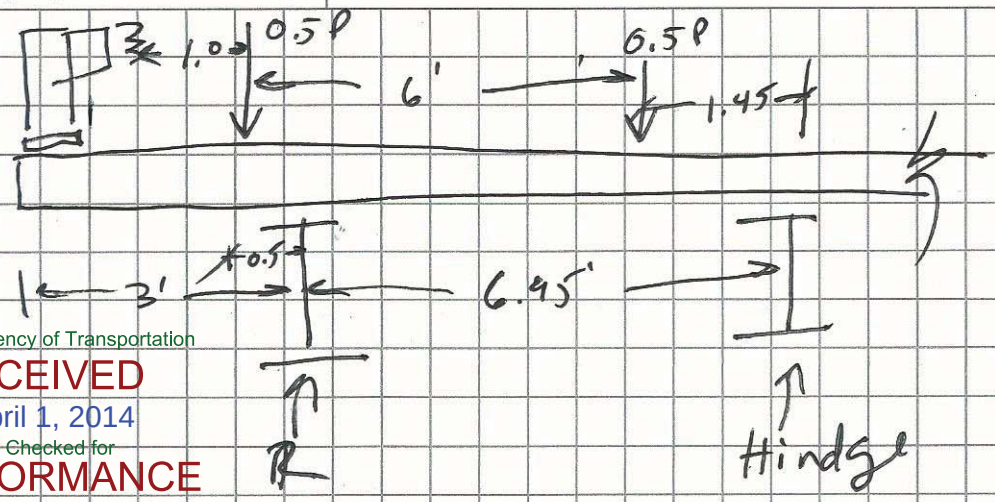

STATE OF VERMONT
RONALD K BELL
NO 8904
PROFESSIONAL ENGINEER

Vermont Agency of Transportation
RECEIVED
ON: April 1, 2014
and Checked for
CONFORMANCE
BY: RK DATE: 4-8-2014

$$M_{Hindge} = -(1.45)(0.5P) - (7.45 \times 0.5P) + 6.95(R) = 0$$

$$R = 0.64P$$

Dynamic Load Allowance = 33%
V Trans Load Modifier for temp Bridge = 0.9
Multiple Lane factor for one lane design = 1.2

} 1.436

FRONT WHEEL LOAD = (0.64) (8 KIPS) (1.436) = 7.352 KIPS (DF)

REAR WHEEL LOAD = (0.64) (32) (1.436) = 29.409 KIPS

DL ON EXTERIOR BEAM = $(7/12)(150)\left[\frac{6.95}{2} + 3\right] + 50\,\#/ft$

$= 616.56\,\#/ft = 0.616\,K/ft$

WORST CASE WHEEL LOAD LOCATION:

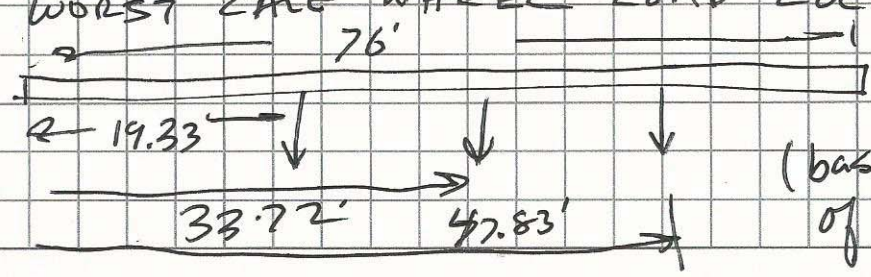

(based on balance pt. of design truck)

BELL ENGINEERING
CIVIL & ENVIRONMENTAL
17 ECHO COVE WAY
SPOFFORD, NEW HAMPSHIRE 03462
(603) 363-9966

PROJECT NAME/ LOCATION: BRF 010-1(43)
SHEET #: 12 OF 22
CALCULATED BY: Ron Bell DATE: 3-11-14
CHECKED BY: DATE:
SCALE:

FOR STRENGTH I DESIGN FACTORS ARE
DC = 1.25
LL+IM = 1.75
FROM ENERCALC: M = 2,867.692 K-ft

General Beam Properties

Elastic Modulus 29,000.0 ksi
Span #1 Span Length = 76.0 ft Area = 90.50 in^2 Moment of Inertia = 21,408.6 in^4

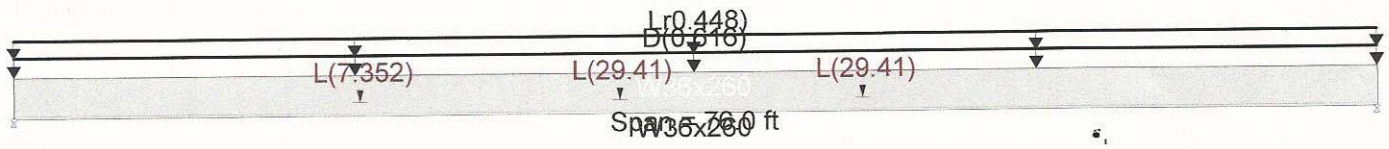

Applied Loads

Service loads entered. Load Factors will be applied for calculations.

Beam self weight calculated and added to loads
Load(s) for Span Number 1
Point Load : L = 7.352 k @ 19.330 ft ← FRONT
Point Load : L = 29.410 k @ 33.770 ft ← REAR
Uniform Load : D = 0.6160 k/ft, Tributary Width = 1.0 ft ← DL
Point Load : L = 29.410 k @ 47.330 ft ← REAR
Uniform Load : Lr = 0.4480 k/ft, Tributary Width = 1.0 ft ← UNIFORM LANE LOAD

lane load

DESIGN SUMMARY

Maximum Bending =	2,867.692 k-ft	Maximum Shear =	117.246 k
Load Combination	+1.250D+1.750Lr+1.750L	Load Combination	+1.250D+1.750Lr+1.750L
Location of maximum on span	33.820 ft	Location of maximum on span	76.000 ft
Span # where maximum occurs	Span # 1	Span # where maximum occurs	Span # 1

Vermont Agency of Transportation
RECEIVED
ON: April 1, 2014
and Checked for
CONFORMANCE
BY: RK DATE: 4-8-2014

STATE OF VERMONT
RONALD K. BELL
NO 8004
PROFESSIONAL ENGINEER

BELL ENGINEERING
CIVIL & ENVIRONMENTAL
17 ECHO COVE WAY
SPOFFORD, NEW HAMPSHIRE 03462
(603) 363-9966

PROJECT NAME/ LOCATION: BRF 010-(01)-(43)
SHEET #: 13 OF 22
CALCULATED BY: Ron Bell DATE: 3-14-14
CHECKED BY: DATE:
SCALE:

FROM ENERCALC M_F = 2,867.492 K-ft

$$M_u = (1.0) F_y S_x = 36 \frac{KIPS}{in^2} \times \frac{1,317.61 \ in^3}{12 \ in/ft}$$

$$= 3952 \ K\text{-}ft$$

$M_u >> M_F$ ∴ OK

Vermont Agency of Transportation
RECEIVED
ON: April 1, 2014
and Checked for
CONFORMANCE
BY: RK DATE: 4-8-2014

STATE OF VERMONT RONALD K BELL NO 6994 PROFESSIONAL ENGINEER

CHECK DEFLECTION

PER AASHTO THE UNIFORM LANE LOAD IS NOT REQUIRED TO BE INCLUDED IN DEFLECTION CALCS AND ALL BEAMS ARE ASSUMED TO DEFLECT EQUALLY:

Elastic Modulus 29,000.0 ksi
Span #1 Span Length = 76.0 ft Area = 90.50 in^2 Moment of Inertia = 21,408.6 in^4

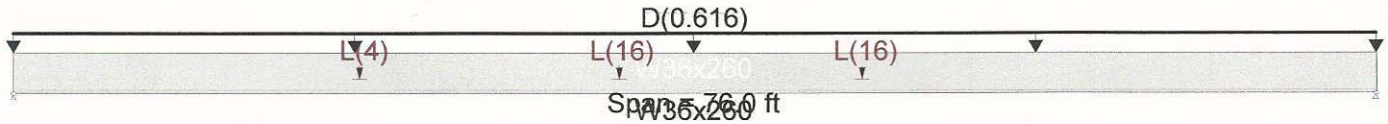

Applied Loads Service loads entered. Load Factors will be applied for calculations.

Beam self weight calculated and added to loads
Load(s) for Span Number 1
Point Load : L = 4.0 k @ 19.330 ft
Point Load : L = 16.0 k @ 33.770 ft
Uniform Load : D = 0.6160 k/ft, Tributary Width = 1.0 ft
Point Load : L = 16.0 k @ 47.330 ft

UNIFORM LANE LOAD NOT INCLUDED

DESIGN SUMMARY

Maximum Bending =	1,506.324 k-ft	Maximum Shear =	60.919 k
Load Combination	+1.250D+1.750Lr+1.750L	Load Combination	+1.250D+1.750Lr+1.750L
Location of maximum on span	33.820 ft	Location of maximum on span	76.000 ft
Span # where maximum occurs	Span # 1	Span # where maximum occurs	Span # 1

Maximum Deflection

Max Downward L+Lr+S Deflection	0.851 in
Max Upward L+Lr+S Deflection	0.000 in
Max Downward Total Deflection	1.602 in
Max Upward Total Deflection	0.000 in

$\frac{76}{12}$ = 912 $\quad \frac{912}{0.851}$ = 1071 > 800 OK

BELL ENGINEERING
CIVIL & ENVIRONMENTAL
17 ECHO COVE WAY-SPOFFORD, NH 03462
(603) 363-9966

Project Title: ~~144212E~~ B&RF 010-(1)(43)
Engineer: Ron Bell
Project Descr:
Project ID: 14/22

Printed: 25 FEB 2014, 9:15AM

General Section Property Calculator

File = c:\Users\Ron\DOCUME~1\ENERCA~1\RT9SEC~1.EC6
ENERCALC, INC. 1983-2013, Build:6.13.8.31, Ver:6.13.12.31

Lic. # : KW-06009396 Licensee : Bell Engineering

Description : 36X260 WITH 1X14 PLATE ON BOT FLANGE

Final Section Properties

Total Area	:	90.50 in^2
Calculated final C.G. distance from Datum :		
X cg Dist.	:	0.0 in
Y cg Dist.	:	-2.882 in
Edge Distances from CG. :		
+X	:	8.275 in
-X	:	-8.275 in
+Y	:	21.012 in
-Y	:	-16.248 in
Ixx =	:	21,408.6 in^4
Iyy =	:	1,318.67 in^4
Sxx : - Y	:	1,317.61 in^3
Sxx : +Y	:	1,018.87 in^3
Syy : - X	:	159.355 in^3
Syy : +X	:	159.355 in^3
r xx	:	15.380 in
r yy	:	3.817 in

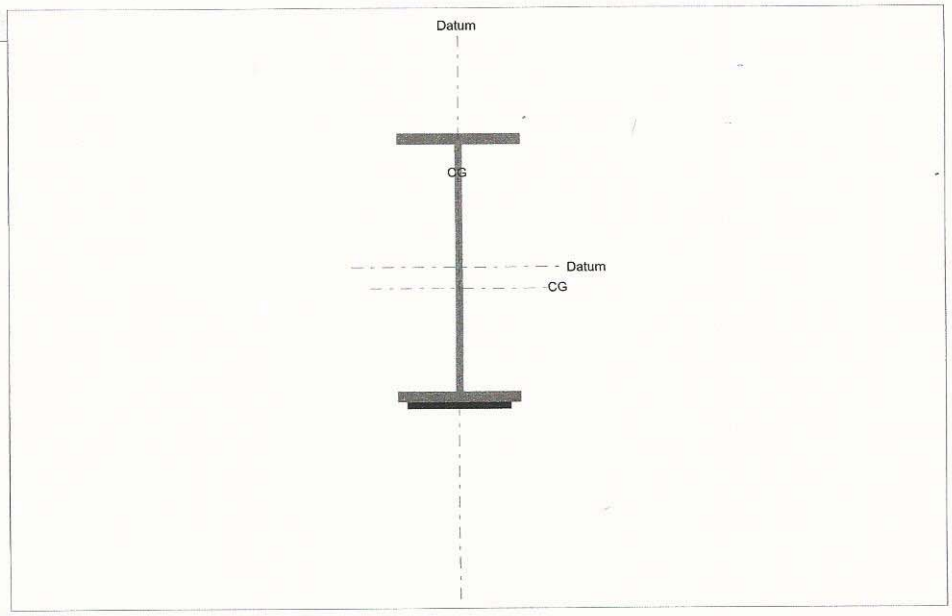

General Shapes

Rect : 1			Height =	1.000 in	Width =	14.000 in	Rotation =	0 dec CCW	
Area =	14.000 in^2	Xcg =	0.000 in	Ixx =	1.167 in^4	Sxx =	2.333 in^3	Rxx =	0.289 in
		Ycg =	-18.630 in	Iyy =	228.667 in^4	Syy =	32.667 in^3	Ryy =	4.041 in

Steel Shapes

W36x260 : 1			Ixx =	17,300.000 in^4	Rotation =	0 dec CCW
Area =	76.500 in^2		Iyy =	1,090.000 in^4	Xcg =	0.000 in
Height	36.260 in		Sxx =	954.220 in^3	Ycg =	0.000 in
Width	16.550 in		Syy =	131.722 in^3		

$Z_x = 1,515.0 \text{ in}^3$

STATE OF VERMONT
RONALD K BELL
NO 6694
PROFESSIONAL ENGINEER

Vermont Agency of Transportation
RECEIVED
ON: April 1, 2014
and Checked for
CONFORMANCE
BY: RK DATE: 4-8-2014

BELL ENGINEERING
CIVIL & ENVIRONMENTAL
17 ECHO COVE WAY
SPOFFORD, NEW HAMPSHIRE 03462
(603) 363-9966

PROJECT NAME/ LOCATION: BRF 010-01 (43)
SHEET #: 15 OF 22
CALCULATED BY: Ron Bell DATE: 3-11-14
CHECKED BY: DATE:
SCALE:

SUBSTRUCTURE DESIGN

2 TRUCKS = 144 KIPS × 1.75 × 1.33 = 335 KIPS

DECK = 27' × (7/12) (150 #/ft³) (1.25) × 76' = 224 KIPS

BEAMS + GUARD RAIL = 90 KIPS (1.25) = 113 KIPS

} 672 KIPS

FOOTING + STEM WALL = (2×4) + (3×1) (150) (26.83') × 1.25 = 55 KIPS

$q_u = \frac{672 \text{ KIPS}}{2 \text{ SIDES}} + 55 \text{ KIPS} = 391 \text{ KIPS/SIDE}$

q_u = FACTORED LOAD/ft² $= \frac{391 \text{ KIPS}}{4' \times 26.83'} = 3.643 \text{ KIPS/ft}^2$

FROM REVIEW OF BORING SHOWING N=4 FOR GRAVEL SAND FROM TABLE C10.6.2.6.1-1 ALLOWABLE PRESUMPTIVE BEARING CAPACITY OF SOIL = 10 KSK

FOR FOUNDATION RESISTANCE FACTOR = 0.45

10 KSF × 0.45 = 4.5 KSF

4.5 KSF > 3.643 KSF OK

STATE OF VERMONT
RONALD K BELL
NO 6894
PROFESSIONAL ENGINEER

Vermont Agency of Transportation
RECEIVED
ON: April 1, 2014
and Checked for
CONFORMANCE
BY: RK DATE: 4-8-2014

Vermont Agency of Transportation
RECEIVED
ON: April 1, 2014
and Checked for
CONFORMANCE
BY: RK DATE: 4-8-2014

BELL ENGINEERING
CIVIL & ENVIRONMENTAL
17 ECHO COVE WAY
SPOFFORD, NEW HAMPSHIRE 03462
(603) 363-9966

PROJECT NAME/ LOCATION: BRF 010-01 (43)
SHEET #: 10 OF 22
CALCULATED BY: Ron Bell DATE: 3-11-14
CHECKED BY: DATE:
SCALE:

CHECK REINFORCEMENT IN FOOTING

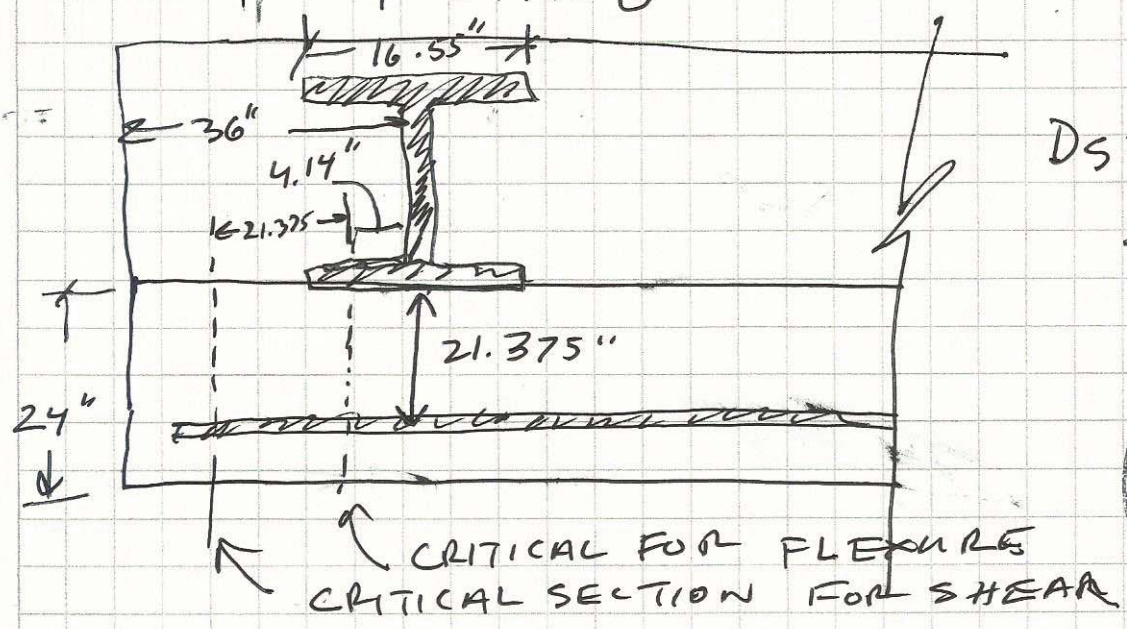

$D_s = 24 - 3 + 6/8/2$

$= 21.375''$

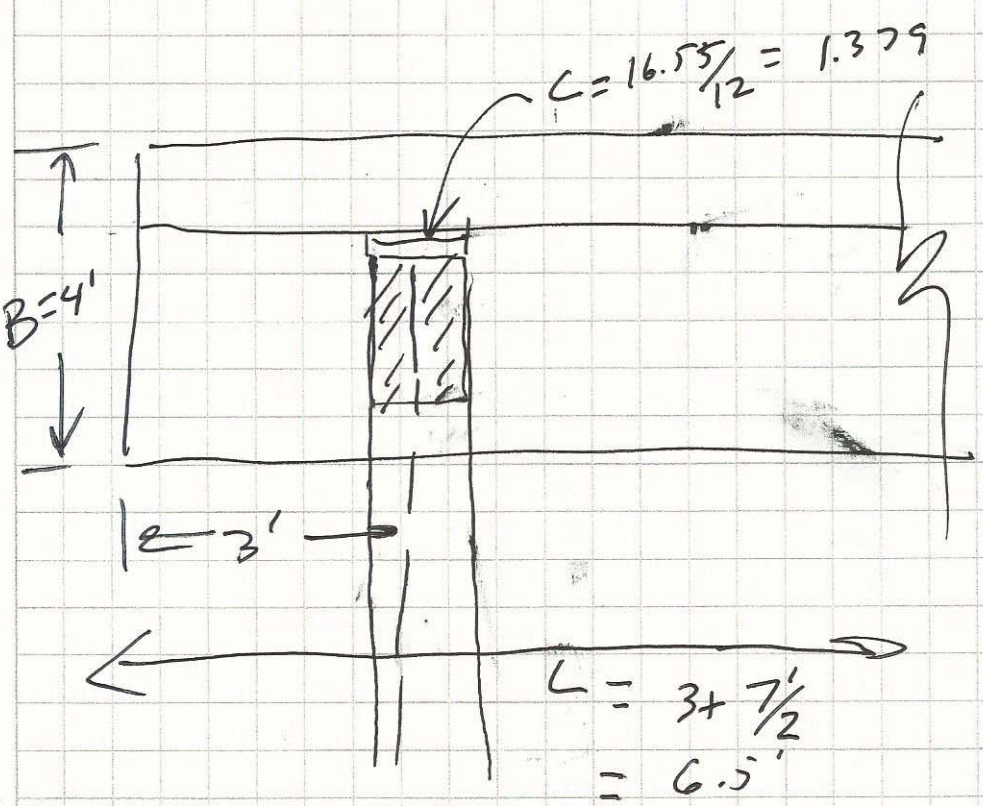

DISTANCE FROM EDGE OF FOOTING TO CRITICAL SECTION FOR FLEXURAL SHEAR:

$x = \frac{L}{2} - \frac{C}{2} - d_s$

$= \frac{6.5}{2} - \frac{1.379}{2} - \frac{21.375}{12}$

$= 0.779'$

$V_u = q_u B x = (3.643)(4)(0.779) = 11.352$ KIPS

q factored

BELL ENGINEERING
CIVIL & ENVIRONMENTAL
17 ECHO COVE WAY
SPOFFORD, NEW HAMPSHIRE 03462
(603) 363-9966

PROJECT NAME/ LOCATION: BRF 010-01 (43)
SHEET #: 17 OF
CALCULATED BY: Ron Bell DATE: 3-11-14
CHECKED BY: DATE:
SCALE:

STATE OF VERMONT RONALD K BELL NO 8604 PROFESSIONAL ENGINEER

SHEAR CAPACITY OF THE FOOTING IS GIVEN BY ACI 318 EQ. 11-3 as:

$$\phi V_c = 2\phi b d \lambda \sqrt{f'_c}$$

$$= \frac{(2)(.75)(48)(21.375)(1.0)\sqrt{3500}}{1000 \text{ \#/Kip}}$$

$$= 91.048 \text{ KIPS} >> V_u \text{ OK}$$

CHECK PUNCHING SHEAR

Vermont Agency of Transportation
RECEIVED
ON: April 1, 2014
and Checked for
CONFORMANCE
BY: RK DATE: 4-8-2014

From ACI 318 EQ. 11-37

$$\phi V_c = 4\phi d b_o \lambda \sqrt{f'_c}$$

The net factored pressure on the footing is:

$$3.643 \text{ KIPS/ft}^2$$

The length of the critical perimeter is;

$$b_o = 4(c+d)$$

$$= \frac{4(16.55+21.375)}{12} = 12.642'$$

V_u @ critical perimeter $= V_u = P_u - q_u(c+d)^2$

$$= 391 - \left[3.643\left(\frac{16.55+21.375}{12}\right)\right]^2$$

$$= 359.613 \text{ KIPS}$$

$$\phi V_c = \frac{(4)(.75)(21.375)(12.642 \times 12)(1.0)\sqrt{3500}}{1000} = 575.517 \text{ KIPS}$$

$> V_u$ OK

BELL ENGINEERING
CIVIL & ENVIRONMENTAL
17 ECHO COVE WAY
SPOFFORD, NEW HAMPSHIRE 03462
(603) 363-9966

PROJECT NAME/ LOCATION: BRF-010-01 (43)
SHEET #: 18 OF 22
CALCULATED BY: Ron Bell DATE: 3-11-14
CHECKED BY: DATE:
SCALE:

CHECK FLEXURE REINFORCEMENT

$$M_u = \frac{q_u B \left(\frac{L}{2} - \frac{c}{2}\right)^2}{2}$$

$$= \frac{(3.541)(4)\left(\frac{7}{2} - \frac{1.38}{2}\right)^2}{2}$$

$$= 55.920 \text{ KIP-FT}$$

STATE OF VERMONT
RONALD K BELL
NO 6694
PROFESSIONAL ENGINEER

$$\phi \rho_F = \frac{0.85 f'_c \left(1 - \sqrt{1 - \frac{M_u}{0.383\, b d^2 \cdot f'_c}}\right)}{f_y}$$

$\phi = 0.90$ (5.5.4.2)

$$\rho_F = \frac{(0.85)(4)\left(1 - \sqrt{1 - \frac{55.290 \text{ ft-kip} \times 12 \times 1000}{(0.383)(36)(21.375)^2 (3500)}}\right)}{60 \times 0.90}$$

$$= .001$$

Vermont Agency of Transportation
RECEIVED
ON: April 1, 2014
and Checked for
CONFORMANCE
BY: RK DATE: 4-8-2014

#6 bars @ 9" o.c. longitudinally provided:

$$\rho = \frac{\pi \left[\left(\frac{6}{8}\right)/2\right]^2 \times \frac{12}{9}}{12 \times 21.375} = .002 >> .001 \text{ OK}$$

BELL ENGINEERING
CIVIL & ENVIRONMENTAL
17 ECHO COVE WAY
SPOFFORD, NEW HAMPSHIRE 03462
(603) 363-9966

PROJECT NAME/ LOCATION: BRF 010-01 (43)
SHEET #: 19 OF 22
CALCULATED BY: Ron Bell DATE: 3-11-14
CHECKED BY: DATE:
SCALE:

STATE OF VERMONT RONALD K BELL NO 6094 PROFESSIONAL ENGINEER

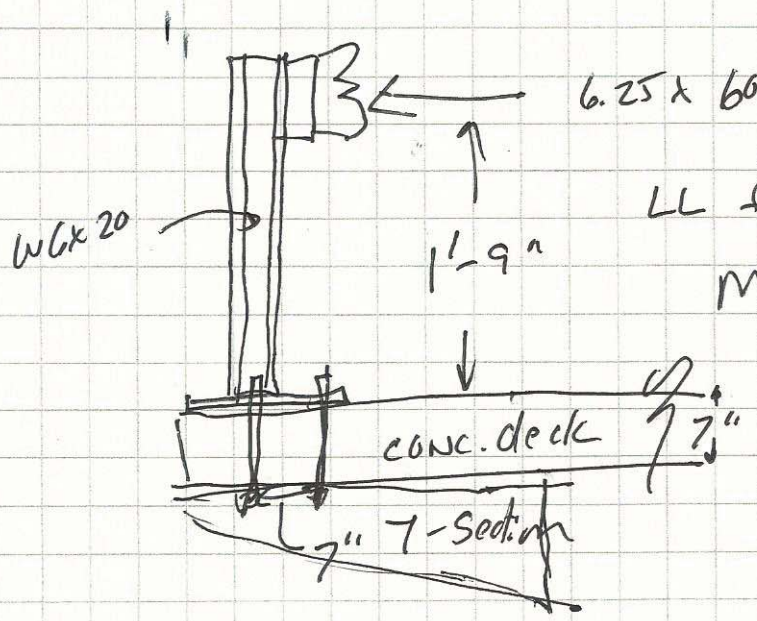

6.25 x 600#/ft = 3750#

LL factor for Strength I = 1.75

Max Bending Stress Ratio from ENVERCALC = 0.204 >> 1.0 OK

Check Bolts: (4) 7/8 A490 (Group B)

Resistance factors: Shear = 0.50
Tension = 0.75

From AISC Table 7-1 + 7-2

Allowable single shear = 37.9 kips
Allowable tension = 51.0 kips

$\phi F_y = (0.75)(51.0) = 38.25$ kips

$\phi V_s = (0.5)(37.9) = 18.950$ kips

Vermont Agency of Transportation
RECEIVED
ON: April 1, 2014
and Checked for
CONFORMANCE
BY: RK DATE: 4-8-2014

BELL ENGINEERING
CIVIL & ENVIRONMENTAL
17 ECHO COVE WAY
SPOFFORD, NEW HAMPSHIRE 03462
(603) 363-9966

PROJECT NAME/ LOCATION: BRF 010-01 (Y3)
SHEET #: 20 OF 22
CALCULATED BY: Ron Bell DATE: 3-11-14
CHECKED BY: DATE:
SCALE:

STATE OF VERMONT RONALD K BELL NO 6694 PROFESSIONAL ENGINEER

Tension on Inside Bolts

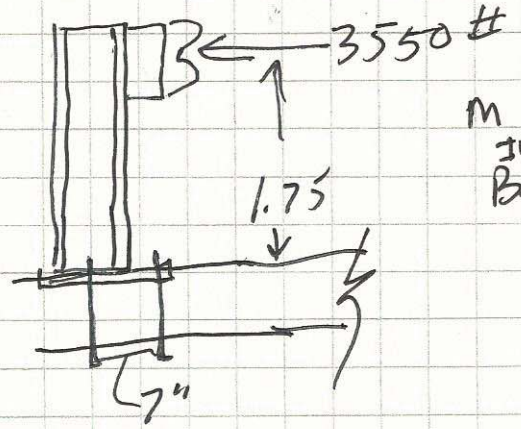

$M_{\text{INSIDE Bolt}} = (1.75)(3750\#)(1.75') - 7/12 R$

$R = 14687.50\#/2 \text{ bolts}$

$= 9843.75\# \text{ bolt}$

The factored tension < the allowable 38.25 KIPS/bolt ∴ OK

Shear on Bolts

$V_F = \frac{(1.75)(3750\#)}{4 \text{ bolts}} = 1.640 \text{ KIPS} << 18.95 \text{ OK}$

Vermont Agency of Transportation
RECEIVED
ON: April 1, 2014
and Checked for
CONFORMANCE
BY: RK DATE: 4-8-2014

BELL ENGINEERING
CIVIL & ENVIRONMENTAL
17 ECHO COVE WAY-SPOFFORD, NH 03462
(603) 363-9966

Project Title: MARLBORO BRF 010-1(43)
Engineer: RON BELL
Project Descr: GUARD RAIL POSTS

Project ID: 010-01 (43)

21/22

Printed: 10 MAR 2014, 1:25PM

Steel Column

File = c:\Users\Ron\DOCUME~1\ENERCA~1\RTGUAR~1.EC6
ENERCALC, INC. 1983-2013, Build:6.13.8.31, Ver:6.13.12.31

Lic. # : KW-06009396 Licensee : Bell Engineering

Description : W6x20 posts @ 6.25' o.c.

Code References

Calculations per AISC 360-05, IBC 2006, CBC 2007, ASCE 7-05
Load Combinations Used : ASCE 7-05

General Information

Steel Section Name : **W6x20**
Analysis Method : Load Resistance Factor
Steel Stress Grade A-992, High Strength, Low Alloy, Fy =
Fy : Steel Yield 50.0 ksi
E : Elastic Bending Modulus 29,000.0 ksi
Load Combination : ASCE 7-05

Overall Column Height 1.750 ft
Top & Bottom Fixity Top Free, Bottom Fixed
Brace condition for deflection (buckling) along columns :
X-X (width) axis :
Fully braced against buckling along X-X Axis
Y-Y (depth) axis :
Fully braced against buckling along Y-Y Axis

Applied Loads

Service loads entered. Load Factors will be applied for calculations.

Column self weight included : 34.968 lbs * Dead Load Factor
BENDING LOADS . . .
Lat. Point Load at 1.750 ft creating Mx-x, L = 3.750 k

DESIGN SUMMARY

Bending & Shear Check Results

PASS Max. Axial+Bending Stress Ratio = **0.2042** : 1
Load Combination +1.750L
Location of max.above base 0.0 ft
At maximum location values are . . .
Pu 0.0 k
0.9 * Pn 264.150 k
Mu-x -11.484 k-ft
0.9 * Mn-x : 56.250 k-ft
Mu-y 0.0 k-ft
0.9 * Mn-y : 25.20 k-ft

PASS Maximum Shear Stress Ratio = **0.1357** : 1
Load Combination +1.750L
Location of max.above base 0.0 ft
At maximum location values are . . .
Vu : Applied 6.563 k
Vn * Phi : Allowable 48.360 k

Maximum SERVICE Load Reactions . .
Top along X-X 0.0 k
Bottom along X-X 0.0 k
Top along Y-Y 0.0 k
Bottom along Y-Y 3.750 k

Maximum SERVICE Load Deflections . . .
Along Y-Y 0.009593 in at 1.750 ft above base
for load combination : L Only
Along X-X 0.0 in at 0.0 ft above base
for load combination :

Maximum Deflections for Load Combinations - Unfactored Loads

Load Combination	Max. X-X Deflection		Distance		Max. Y-Y Deflection		Distance	
L Only	0.0000	in	0.000	ft	0.010	in	1.750	ft
D+L	0.0000	in	0.000	ft	0.009	in	1.738	ft

Steel Section Properties : W6x20

Depth	=	6.200 in	I xx	=	41.40 in^4	J	=	0.240 in^4
Web Thick	=	0.260 in	S xx	=	13.40 in^3	Cw	=	113.00 in^6
Flange Width	=	6.020 in	R xx	=	2.660 in			
Flange Thick	=	0.365 in	Zx	=	15.000 in^3			
Area	=	5.870 in^2	I yy	=	13.300 in^4			
Weight	=	19.981 plf	S yy	=	4.410 in^3	Wno	=	8.780 in^2
Kdesign	=	0.615 in	R yy	=	1.500 in	Sw	=	4.820 in^4
K1	=	0.563 in	Zy	=	6.720 in^3	Qf	=	3.070 in^3
rts	=	1.700 in	rT	=	1.640 in	Qw	=	7.380 in^3
Ycg	=	0.000 in						

STATE OF VERMONT
RONALD K BELL
NO 6994
PROFESSIONAL ENGINEER

Vermont Agency of Transportation
RECEIVED
ON: April 1, 2014
and Checked for
CONFORMANCE
BY: RK DATE: 4-8-2014

BELL ENGINEERING
CIVIL & ENVIRONMENTAL
17 ECHO COVE WAY-SPOFFORD, NH 03462
(603) 363-9966

Project Title: MARLBORO BRF 010-1(43)
Engineer: RON BELL
Project Descr: GUARD RAIL POSTS

Project ID: 010-01 (43)

22/22

Printed: 10 MAR 2014, 1:25PM

Steel Column

File = c:\Users\Ron\DOCUME~1\ENERCA~1\RTGUAR~1.EC6
ENERCALC, INC. 1983-2013, Build:6.13.8.31, Ver:6.13.12.31

Lic. # : KW-06009396 Licensee : Bell Engineering

Description : W6x20 posts @ 6.25' o.c.

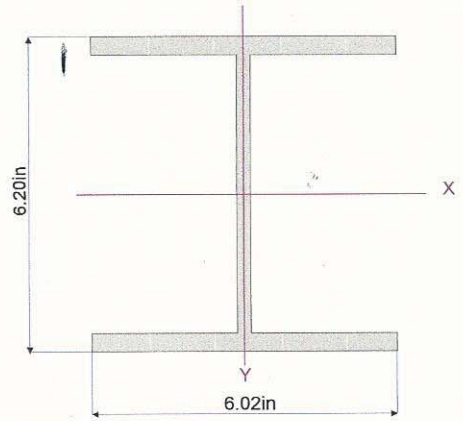

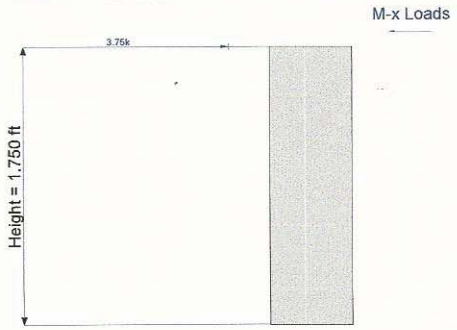

Loads are total entered value. Arrows do not reflect absolute direction.

Vermont Agency of Transportation
RECEIVED
ON: April 1, 2014
and Checked for
CONFORMANCE
BY: RK DATE: 4-8-2014

STATE OF VERMONT
RONALD K BELL
NO 6594
PROFESSIONAL ENGINEER

CODE

Equations used not in LRFD (3 supplemental sheets)

11

11.1.3.2 — For prestressed members, sections located less than a distance $h/2$ from face of support shall be permitted to be designed for V_u computed at a distance $h/2$.

11.1.4 — For deep beams, brackets and corbels, walls, and slabs and footings, the special provisions of 11.7 through 11.11 shall apply.

11.2 — Shear strength provided by concrete for nonprestressed members

11.2.1 — V_c shall be computed by provisions of 11.2.1.1 through 11.2.1.3, unless a more detailed calculation is made in accordance with 11.2.2. Throughout this chapter, except in 11.6, λ shall be as defined in 8.6.1.

11.2.1.1 — For members subject to shear and flexure only,

$$V_c = 2\lambda\sqrt{f'_c}\, b_w d \qquad (11\text{-}3)$$

flexural shear

11.2.1.2 — For members subject to axial compression,

$$V_c = 2\left(1 + \frac{N_u}{2000A_g}\right)\lambda\sqrt{f'_c}\, b_w d \qquad (11\text{-}4)$$

Quantity N_u/A_g shall be expressed in psi.

COMMENTARY

members supported by bearing at the bottom of member, such as shown in Fig. R11.1.3.1(c); and members framing monolithically into another member illustrated in Fig. R11.1.3.1(d).

Support conditions where this provision should not applied include: (1) Members framing into a support member in tension, such as shown in Fig. R11.1.3.1(e). this case, the critical section for shear should be taken at face of the support. Shear within the connection should be investigated and special corner reinforcement should provided. (2) Members for which loads are not applied near the top of the member. This is the condition referred to Fig. 11.1.3.1(b). For such cases, the critical section is taken the face of the support. Loads acting near the support should be transferred across the inclined crack extending upward from the support face. The shear force acting on the critical section should include all loads applied below the potential inclined crack. (3) Members loaded such that the shear sections between the support and a distance d from support differs radically from the shear at distance d. This commonly occurs in brackets and in beams where a concentrated load is located close to the support, as shown in Fig. R11.1.3.1(f) or in footings supported on piles. In this case, the shear at the face of the support should be used.

R11.1.3.2 — Because d frequently varies in prestressed members, the location of the critical section has arbitrarily been taken as $h/2$ from the face of the support.

R11.2 — Shear strength provided by concrete for nonprestressed members

R11.2.1.1 — See R11.2.2.1.

R11.2.1.2 and R11.2.1.3 — See R11.2.2.2.

American Concrete Institute Copyrighted Material—www.concrete.org

CODE

.11.1.3 — For square or rectangular columns, entrated loads, or reaction areas, the critical ons with four straight sides shall be permitted.

1.2 — The design of a slab or footing for two-way n is based on Eq. (11-1) and (11-2). V_c shall be puted in accordance with 11.11.2.1, 11.11.2.2, or 1.3. V_s shall be computed in accordance with 1.3. For slabs with shearheads, V_n shall be in rdance with 11.11.4. When moment is transferred een a slab and a column, 11.11.7 shall apply.

.11.2.1 — For nonprestressed slabs and footings, hall be the smallest of (a), (b), and (c):

$$V_c = \left(2 + \frac{4}{\beta}\right)\lambda\sqrt{f'_c}\, b_o d \qquad (11\text{-}31)$$

re β is the ratio of long side to short side of the mn, concentrated load or reaction area;

$$V_c = \left(\frac{\alpha_s d}{b_o} + 2\right)\lambda\sqrt{f'_c}\, b_o d \qquad (11\text{-}32)$$

re α_s is 40 for interior columns, 30 for edge mns, 20 for corner columns; and

$$V_c = 4\lambda\sqrt{f'_c}\, b_o d \qquad (11\text{-}33)$$

for punching shear

.11.2.2 — At columns of two-way prestressed s and footings that meet the requirements of 1.3

$$V_c = (\beta_p\lambda\sqrt{f'_c} + 0.3 f_{pc}) b_o d + V_p \qquad (11\text{-}34)$$

re β_p is the smaller of 3.5 and $(\alpha_s d/b_o + 1.5)$, α_s is or interior columns, 30 for edge columns, and 20 corner columns, b_o is perimeter of critical section ned in 11.11.1.2, f_{pc} is taken as the average value pc for the two directions, and V_p is the vertical ponent of all effective prestress forces crossing critical section. V_c shall be permitted to be puted by Eq. (11-34) if the following are satisfied; erwise, 11.11.2.1 shall apply:

COMMENTARY

For edge columns at points where the slab cantilevers beyond the column, the critical perimeter will either be three-sided or four-sided.

R11.11.2.1 — For square columns, the shear stress due to ultimate loads in slabs subjected to bending in two directions is limited to $4\lambda\sqrt{f'_c}$. However, tests[11.61] have indicated that the value of $4\lambda\sqrt{f'_c}$ is unconservative when the ratio β of the lengths of the long and short sides of a rectangular column or loaded area is larger than 2.0. In such cases, the actual shear stress on the critical section at punching shear failure varies from a maximum of about $4\lambda\sqrt{f'_c}$ around the corners of the column or loaded area, down to $2\lambda\sqrt{f'_c}$ or less along the long sides between the two end sections. Other tests[11.62] indicate that v_c decreases as the ratio b_o/d increases. Equations (11-31) and (11-32) were developed to account for these two effects. The words "interior," "edge," and "corner columns" in 11.11.2.1(b) refer to critical sections with four, three, and two sides, respectively.

For shapes other than rectangular, β is taken to be the ratio of the longest overall dimension of the effective loaded area to the largest overall perpendicular dimension of the effective loaded area, as illustrated for an L-shaped reaction area in Fig. R11.11.2. The effective loaded area is that area totally enclosing the actual loaded area, for which the perimeter is a minimum.

R11.11.2.2 — For prestressed slabs and footings, a modified form of Code Eq. (11-31) and (11-34) is specified for two-way action shear strength. Research[11.63,11.64] indicates that the shear strength of two-way prestressed slabs around interior columns is conservatively predicted by Eq. (11-34). V_c from Eq. (11-34) corresponds to a diagonal tension failure of the concrete initiating at the critical section defined in 11.11.1.2. The mode of failure differs from a punching shear failure of the concrete compression zone around the perimeter of the loaded area predicted by Eq. (11-31). Consequently, the term β does not enter into Eq. (11-34). Values for $\sqrt{f'_c}$ and f_{pc} are restricted in design due to limited test data available for higher values. When computing f_{pc}, loss of prestress due to restraint of the slab by shear walls and other structural elements should be taken into account.

11

American Concrete Institute Copyrighted Material—www.concrete.org

CODE

COMMENTARY

Moment redistribution as permitted by 8.4 is not intended for moments in two-way slab systems that are analyzed using the pattern loadings given in 13.7.6.3 or for use where approximate values of bending moments are used. For the Direct Design Method, 10 percent modification is allowed by 13.6.7.

Before 2002, Section 8.4 specified the permissible redistribution percentage in terms of reinforcement indices. The 2002 Code specified the permissible redistribution percentage in terms of the net tensile strain in extreme tension steel at nominal strength, ε_t. See Reference 8.6 for a comparison of these moment redistribution provisions.

8

8.5 — Modulus of elasticity

8.5.1 — Modulus of elasticity, E_c, for concrete shall be permitted to be taken as $w_c^{1.5}33\sqrt{f'_c}$ (in psi) for values of w_c between 90 and 160 lb/ft^3. For normalweight concrete, E_c shall be permitted to be taken as $57{,}000\sqrt{f'_c}$.

8.5.2 — Modulus of elasticity, E_s, for nonprestressed reinforcement shall be permitted to be taken as 29,000,000 psi.

8.5.3 — Modulus of elasticity, E_p, for prestressing steel shall be determined by tests or reported by the manufacturer.

R8.5 — Modulus of elasticity

R8.5.1 — Studies leading to the expression for modulus of elasticity of concrete in 8.5.1 are summarized in Reference 8.7 where E_c was defined as the slope of the line drawn from a stress of zero to a compressive stress of $0.45f'_c$. The modulus of elasticity for concrete is sensitive to the modulus of elasticity of the aggregate and may differ from the specified value. Measured values range typically from 120 to 80 percent of the specified value. Methods for determining the modulus of elasticity for concrete are described in Reference 8.8.

8.6 — Lightweight concrete

8.6.1 — To account for the use of lightweight concrete, unless specifically noted otherwise, a modification factor λ appears as a multiplier of $\sqrt{f'_c}$ in all applicable equations and sections of this Code, where $\lambda = 0.85$ for sand-lightweight concrete and 0.75 for all-lightweight concrete. Linear interpolation between 0.75 and 0.85 shall be permitted, on the basis of volumetric fractions, when a portion of the lightweight fine aggregate is replaced with normalweight fine aggregate. Linear interpolation between 0.85 and 1.0 shall be permitted, on the basis of volumetric fractions, for concrete containing normalweight fine aggregate and a blend of lightweight and normalweight coarse aggregates. For normalweight concrete, $\lambda = 1.0$. If average splitting tensile strength of lightweight concrete, f_{ct}, is specified, $\lambda = f_{ct}/(6.7\sqrt{f'_c}) \leq 1.0$.

R8.6 — Lightweight concrete

R8.6.1 — Factor λ reflects the lower tensile strength of lightweight concrete, which can reduce shear strength, friction properties, splitting resistance, bond between concrete and reinforcement, and increase development length, compared with normalweight concrete of the same compressive strength.

Two alternative procedures are provided to determine λ. The first alternative is based on the assumption that the tensile strength of lightweight concrete is a fixed fraction of the tensile strength of normalweight concrete.[8.9] The multipliers are based on data from tests on many types of structural lightweight aggregate.

The second alternative is based on laboratory tests to determine the relationship between average splitting tensile strength f_{ct} and the specified compressive strength f'_c for the lightweight concrete being used. For normalweight concrete, the average splitting tensile strength f_{ct} is approximately equal to $6.7\sqrt{f'_c}$.[8.9,8.10]

American Concrete Institute Copyrighted Material—www.concrete.org

State of Vermont
PDD/Structures Design Section
National Life Building – Drawer 33
Montpelier, VT 05633-5001
www.aot.state.vt.us

[phone] 802-828-2621
[fax] 802-828-3566
[ttd] 800-253-0191

Agency of Transportation

April 9, 2014

Renaud Bros. Construction
283 Fort Bridgeman Rd #2
Vernon, VT 05354

Project Name: **Marlboro BRF 010-1(43)**
Structure Identification: **Bridge #48 on VT RTE 9 over Whetstone Brook**

The Site Specific Traffic Control Plan incidental to Item 900.645 Special Provision (Traffic Control, All-Inclusive) for the above project has been reviewed and is being returned herewith.

Both sign summary sheets, sheet 3 and sheet 6 are approved as noted. All other sheets are approved.

Sincerely,

Kristin M. Higgins

Kristin M. Higgins, P.E.
Structures Project Manager

RENAUD BROS., INC.

283 Fort Bridgeman Road #2, Vernon, VT 05354

phone (802) 257-7383
fax (802) 257-7308

Marlboro BRF 010-1 (43)
Traffic Signage Narrative

Overview

We are proposing to decrease the speed limit to twenty miles per hour into the work site and ten miles per hour across the temporary bridge. The plans illustrate how the speed decrease will be signed for the traveling public. Sheets 1-4 illustrate the sign package that will be in place from start of construction to finish. We will supplement the package with flaggers when construction activities dictate the use.

Deliveries

Flaggers will be needed at times as deliveries arrive. Some will go to the staging area and some right to the area we are working in.

Traffic flow

If we stop the flow of traffic it will never be for more than ten minutes. If any emergency vehicles are observed we will get them through the site immediately.

Vermont Agency of Transportation
RECEIVED
MARLBORO BRF 010-1(43) TCP Submittal 4-9-2014.pdf
CK'D BY MM OK'D BY JS
April 9, 2014
RESUBMIT NO Approved
BY KH DATE 4-9-2014

STATE OF VERMONT
RONALD K. BEIL
NO 8394
PROFESSIONAL ENGINEER

Vermont Agency of Transportation
RECEIVED
MARLBORO BRF 010-1(42) TCP Submittal 4-9-2014.pdf
CK'D BY MM OK'D BY JS
April 9, 2014
RESUBMIT NO Approved AsNoted
BY KH DATE 4-9-2014

SIGN LEGEND	SIGN DIMENSIONS WIDTH IN	SIGN DIMENSIONS HEIGHT IN	SIGN COLOR	QUA
ROAD WORK 1 MILE W20-1	48	48	B/FO	4
ROAD WORK AHEAD W20-1	48	48	B/FO	7
SPEED LIMIT 40 R2-1	30	36	B/W	2
SPEED LIMIT 30 R2-1	30	36	B/W	2
SPEED LIMIT 20 W3-5	36	36	BW/FO	2
WORK ZONE G20-5aP	24	18	B/FO	2
SPEED LIMIT 20 R2-1	30	36	B/W	2
FINES DOUBLE R2-6aP	24	18	B/W	2
SPEED LIMIT 30 W3-5	36	36	BW/FO	2
W24-1	36	36	B/FO	1
10 M.P.H. W13-1P	18	18	B/FO	2

STATE OF VERMONT
RONALD K. BELL
NO 8394
PROFESSIONAL ENGINEER

SIGN LEGEND	SIGN DIMENSIONS		SIGN COLOR	QUANTITY
	WIDTH IN	HEIGHT IN		
ROAD CLOSED R11-2	48	30	B/W	2
SPEED LIMIT 40 W3-5	36	36	BW/FO	2
W1-6	48	24	B/FO	1
W1-6	48	24	B/FO	1
W24-1	36	36	B/FO	1
END ROAD WORK G20-2	36	18	B/FO	5

Vermont Agency of Transportation
RECEIVED
MARLBORO BRF 010-1(43) TCP Submittal 4-9-2014.pdf
CK'D BY MM OK'D BY JS
April 9, 2014
RESUBMIT NO Approved AsNoted
BY KH DATE 4-9-2014

STATE OF VERMONT
RONALD K BELL
NO 8394
PROFESSIONAL ENGINEER

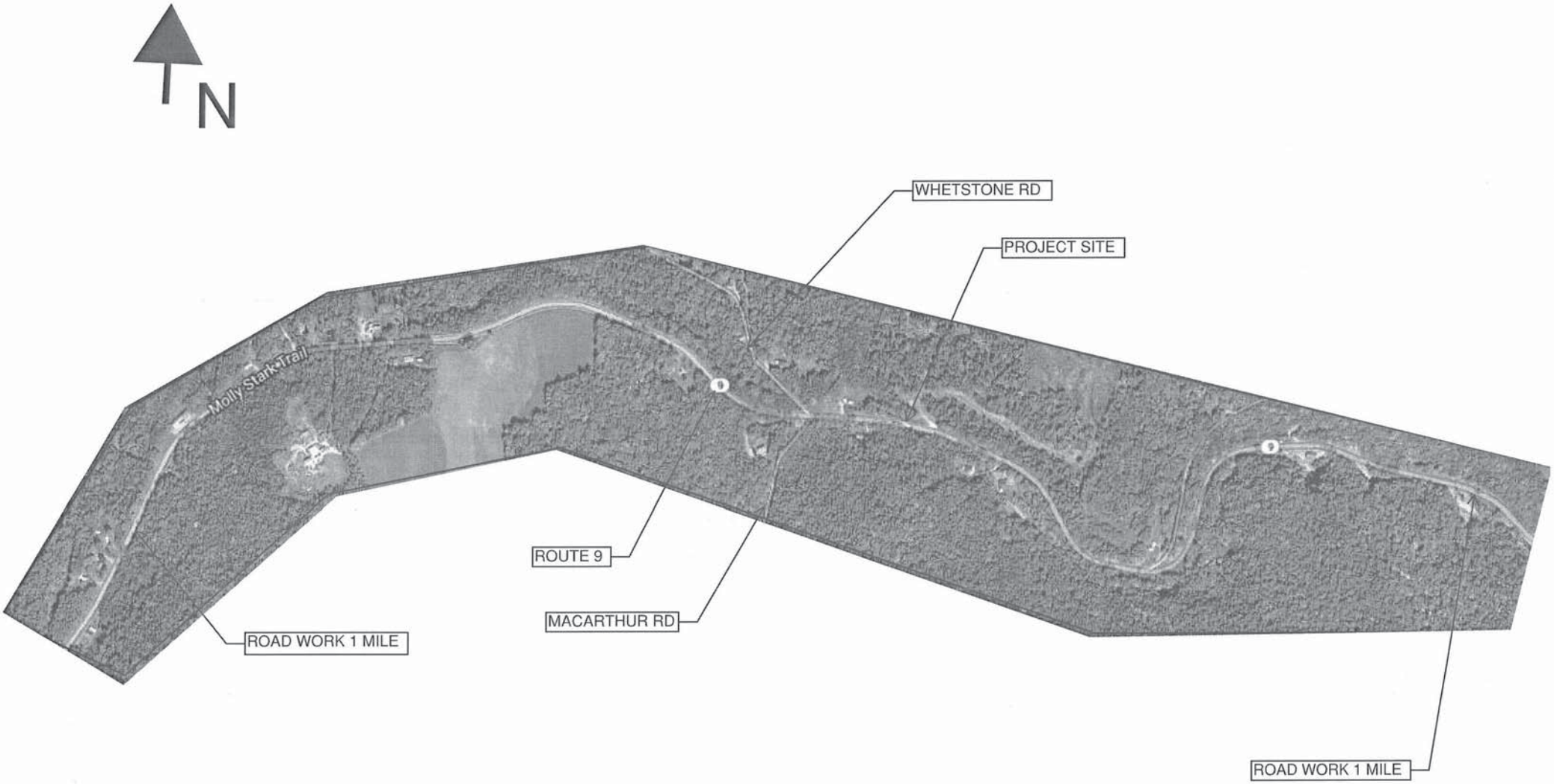

MARLBORO BRF 010-1 (43)
TRAFFIC CONTROL SIGNAGE PLAN
ROUTE 9 WEST OF PROJECT
SHEET 1

Vermont Agency of Transportation
RECEIVED
CK'D BY MM OK'D BY JS
April 9, 2014
RESUBMIT NO Approved
BY KH DATE 4-9-2014

STATE OF VERMONT
RONALD K. BEL
NO 6694
PROFESSIONAL ENGINEER

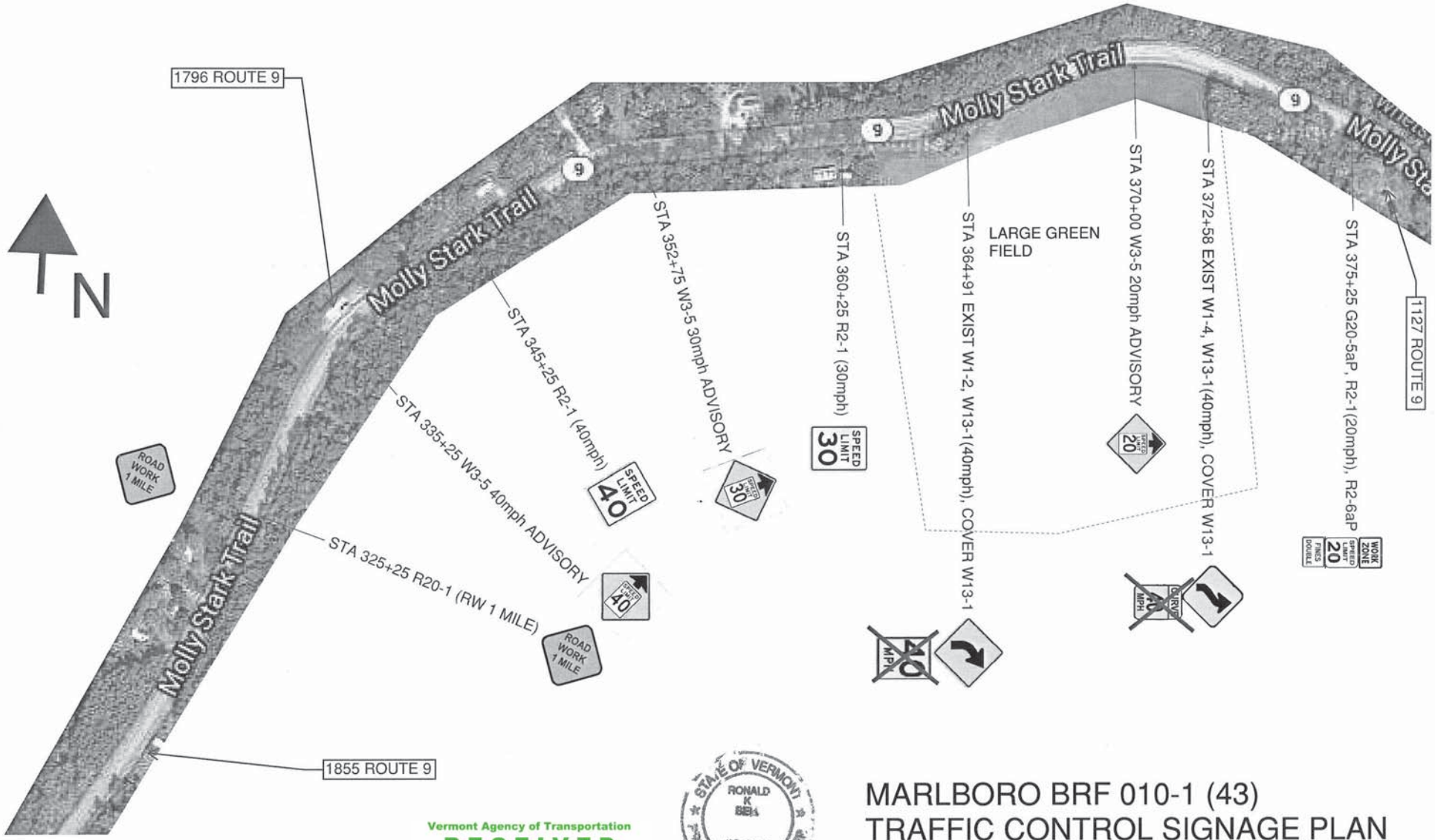

Vermont Agency of Transportation
RECEIVED
CK'D BY MM OK'D BY JS
April 9, 2014
RESUBMIT NO Approved
BY KH DATE 4-9-2014

STATE OF VERMONT
RONALD K BEA
NO 6204
PROFESSIONAL ENGINEER

MARLBORO BRF 010-1 (43)
TRAFFIC CONTROL SIGNAGE PLAN
ROUTE 9 WEST OF PROJECT
SHEET 2

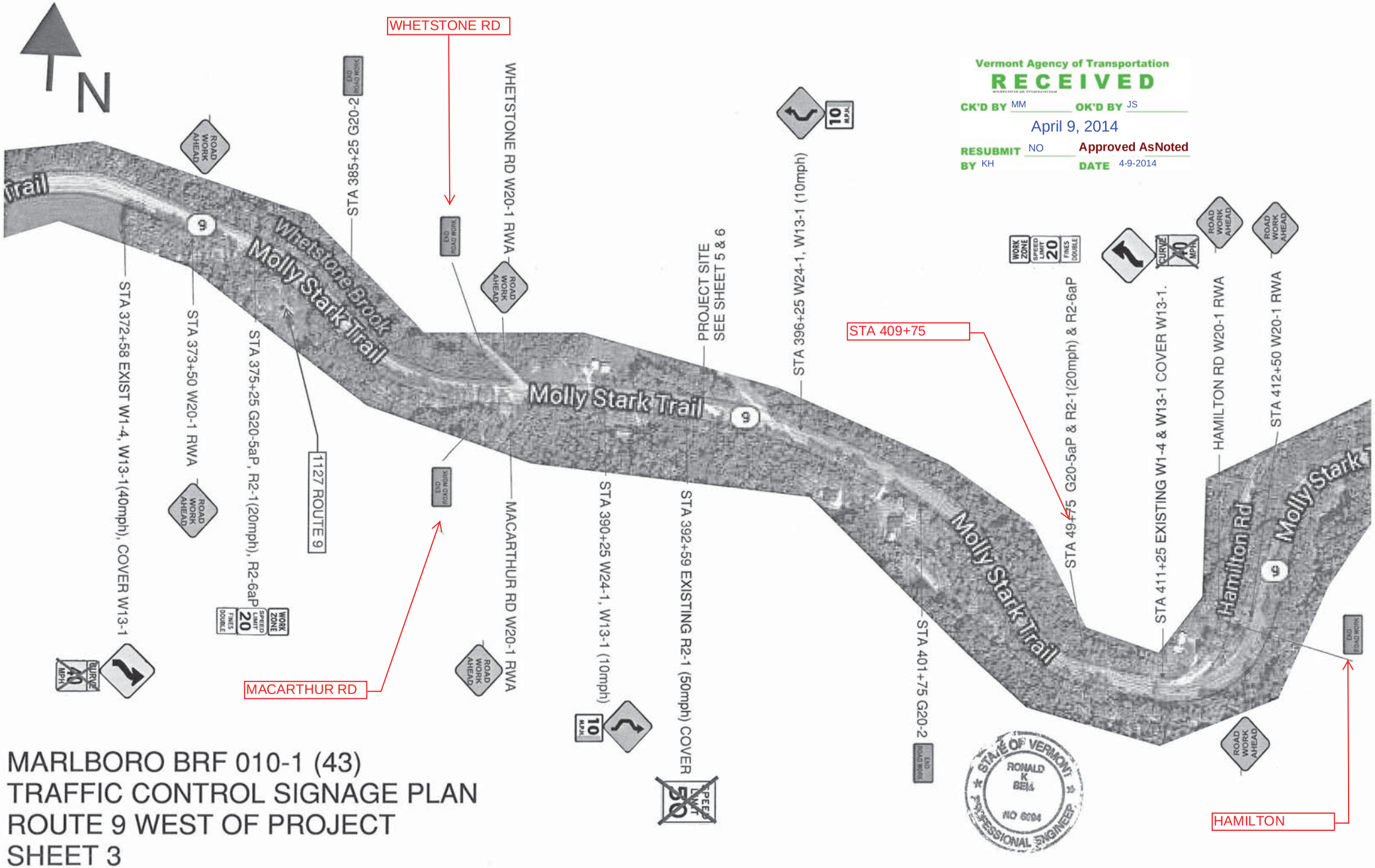

Vermont Agency of Transportation
RECEIVED
CK'D BY MM OK'D BY JS
April 9, 2014
RESUBMIT NO Approved AsNoted
BY KH DATE 4-9-2014

STATE OF VERMONT
RONALD K BEM
NO 6094
PROFESSIONAL ENGINEER

MARLBORO BRF 010-1 (43)
TRAFFIC CONTROL SIGNAGE PLAN
ROUTE 9 WEST OF PROJECT
SHEET 3

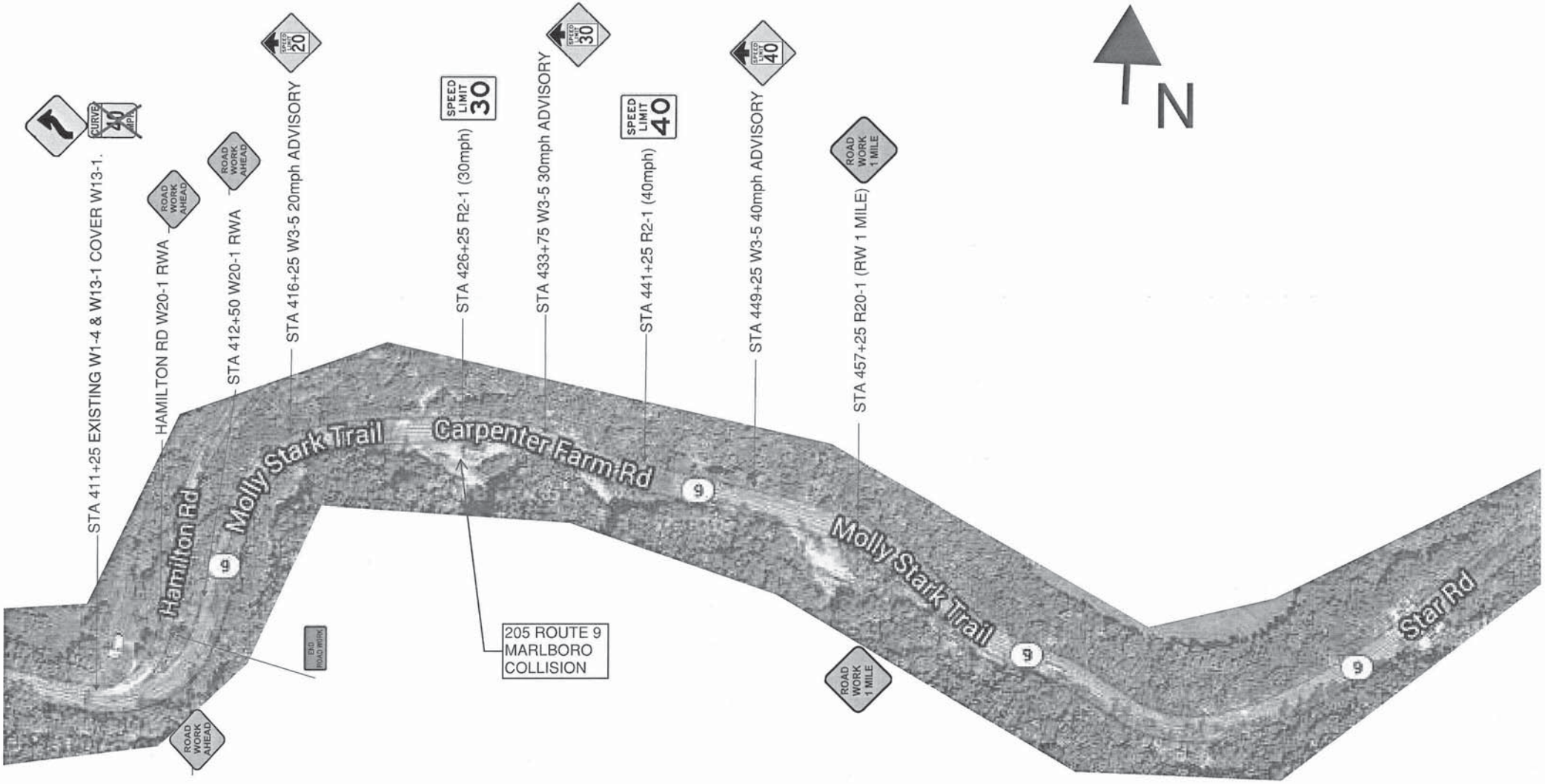

MARLBORO BRF 010-1 (43)
TRAFFIC CONTROL SIGNAGE PLAN
ROUTE 9 WEST OF PROJECT
SHEET 4

Vermont Agency of Transportation
RECEIVED
CK'D BY MM OK'D BY JS
April 9, 2014
RESUBMIT NO Approved
BY KH DATE 4-9-2014

STATE OF VERMONT
RONALD K BEA
NO 8094
PROFESSIONAL ENGINEER

MARLBORO BRF 010-1 (43)
TRAFFIC CONTROL SIGNAGE PLAN
ROUTE 9 WEST OF PROJECT
SHEET 5

N

STATE OF VERMONT
RONALD K BEEM
NO 8094
PROFESSIONAL ENGINEER

Vermont Agency of Transportation
RECEIVED
CK'D BY MM OK'D BY JS
April 9, 2014
RESUBMIT NO Approved
BY KH DATE 4-9-2014

MARLBORO BRF 010-1 (43)
TRAFFIC CONTROL SIGNAGE PLAN
ROUTE 9 WEST OF PROJECT
SHEET 6

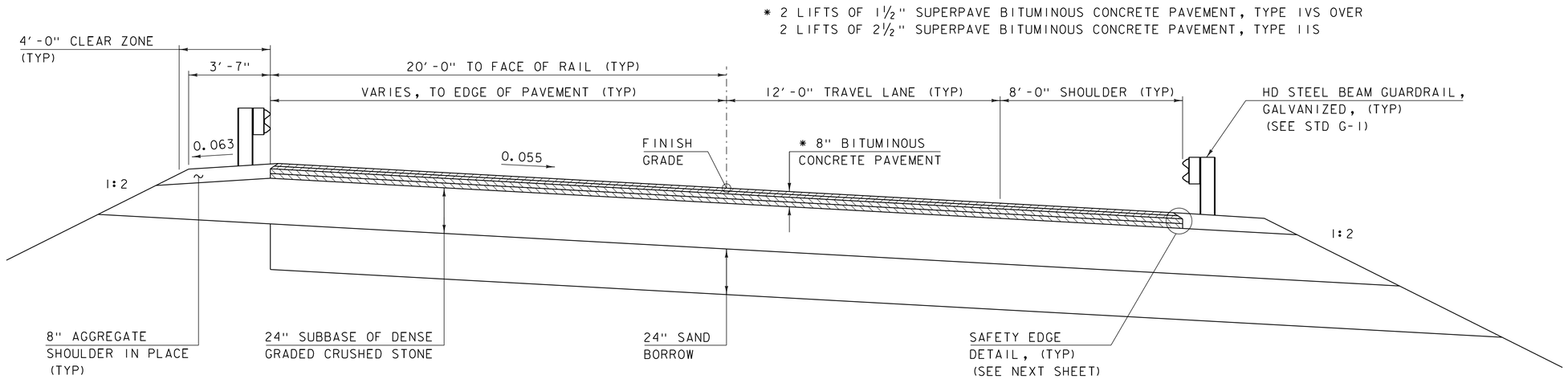

ROADWAY TYPICAL SECTION

SCALE: ⅜" = 1'-0"

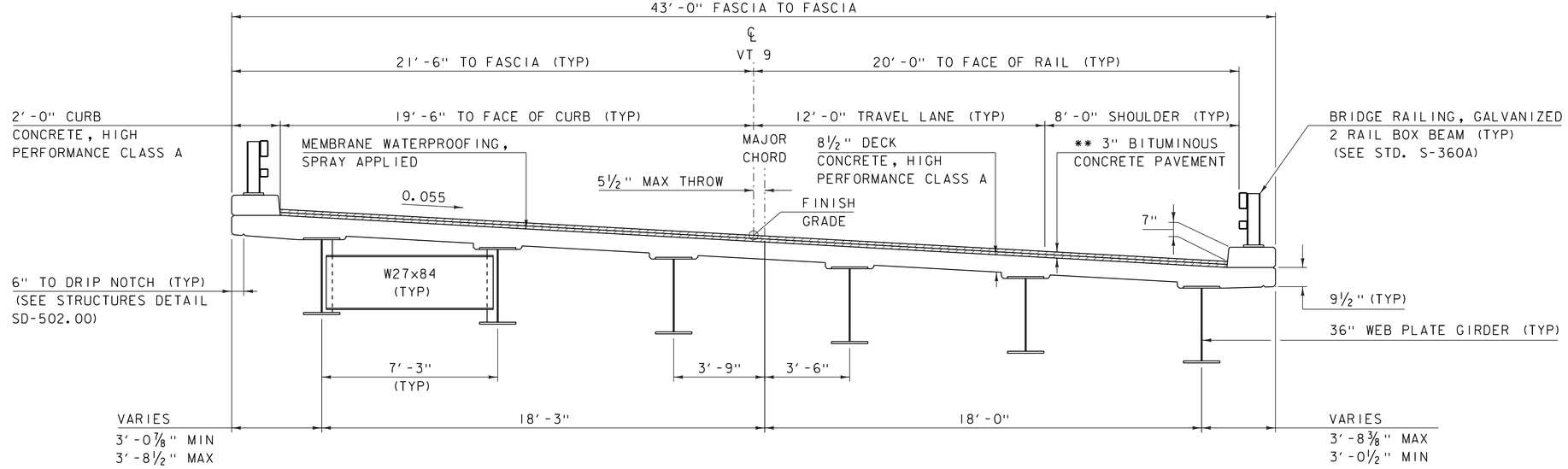

** 2 LIFTS OF 1½" SUPERPAVE BITUMINOUS CONCRETE PAVEMENT, TYPE IVS

BRIDGE TYPICAL SECTION ⚠

SCALE: ⅜" = 1'-0"

MATERIAL TOLERANCES
(IF USED ON PROJECT)

SURFACE	
- PAVEMENT (TOTAL THICKNESS)	+/- ¼"
- AGGREGATE SURFACE COURSE	+/- ½"
SUBBASE	+/- 1"
SAND BORROW	+/- 1"

⚠ - REVISED 4/8/2014.
REPLACES SHEET 6 IN CONTRACT PLANS.

PROJECT NAME: MARLBORO
PROJECT NUMBER: BRF 010-1(43)

FILE NAME: s10b414typ.dgn
PROJECT LEADER: K. HIGGINS
DESIGNED BY: R. KLINEFELTER
TYPICAL SECTIONS 1

PLOT DATE: 08-APR-2014
DRAWN BY: K. FRIEDLAND
CHECKED BY: J. SALVATORI
SHEET 6 OF 50

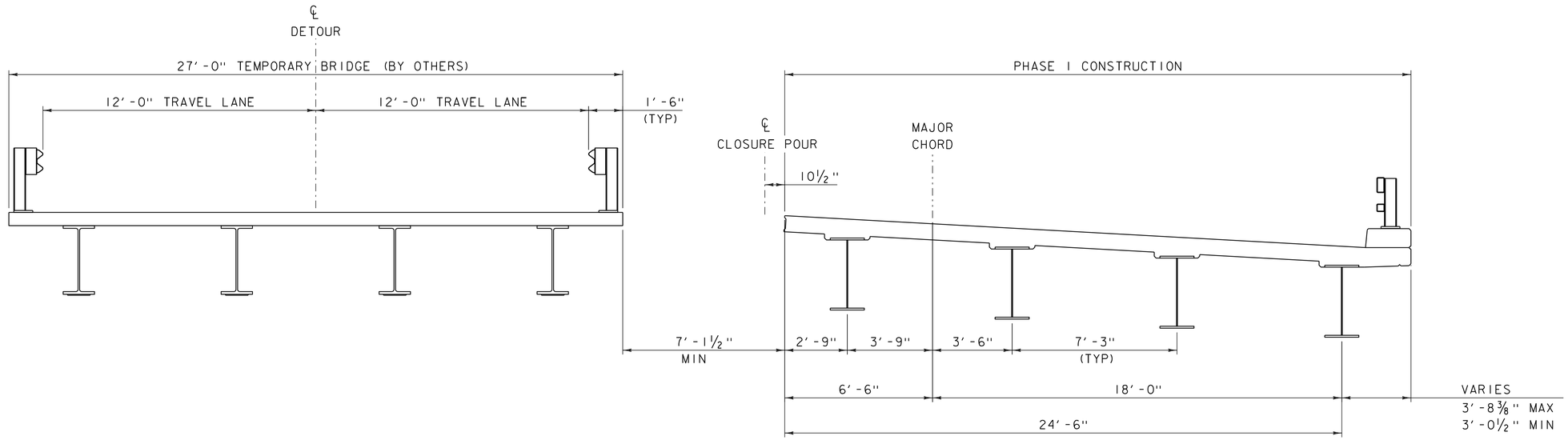

PHASE 1

SCALE: ⅜" = 1'-0"

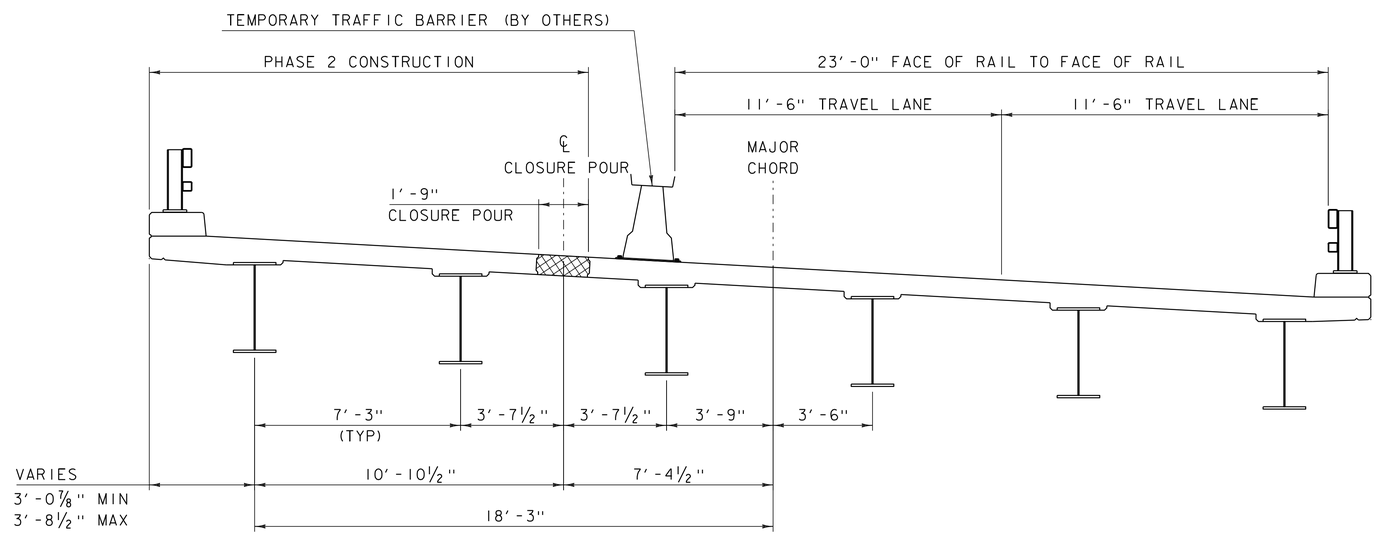

PHASE 2

SCALE: ⅜" = 1'-0"

NOTE:

CENTERLINE RUMBLE STRIPS ARE CURRENTLY IN PLACE ON THIS PORTION OF VERMONT ROUTE 9. IF FINAL PHASING PLAN REQUIRES MASKING OF ANY EXISTING CENTERLINE PAVEMENT MARKINGS, THE RUMBLE STRIPS WILL HAVE TO BE FILLED. IF THIS OCCURS, THE RUMBLE STRIP SHALL BE RESTORED AT THE END OF CONSTRUCTION. PAYMENT WILL BE INCIDENTAL TO CONTRACT ITEM 900.645 SPECIAL PROVISION (TRAFFIC CONTROL, ALL-INCLUSIVE).

⚠ -SHEET REVISED 4/8/2014.
REPLACES SHEET 13 IN CONTRACT PLANS.

PROJECT NAME: MARLBORO	
PROJECT NUMBER: BRF 010-1(43)	
FILE NAME: s10b414phasewrk.dgn	PLOT DATE: 08-APR-2014
PROJECT LEADER: K. HIGGINS	DRAWN BY: R. KLINEFELTER
DESIGNED BY: R. KLINEFELTER	CHECKED BY: J. SALVATORI
PHASE CONSTRUCTION DETAILS 1	SHEET 13 OF 50

⚠

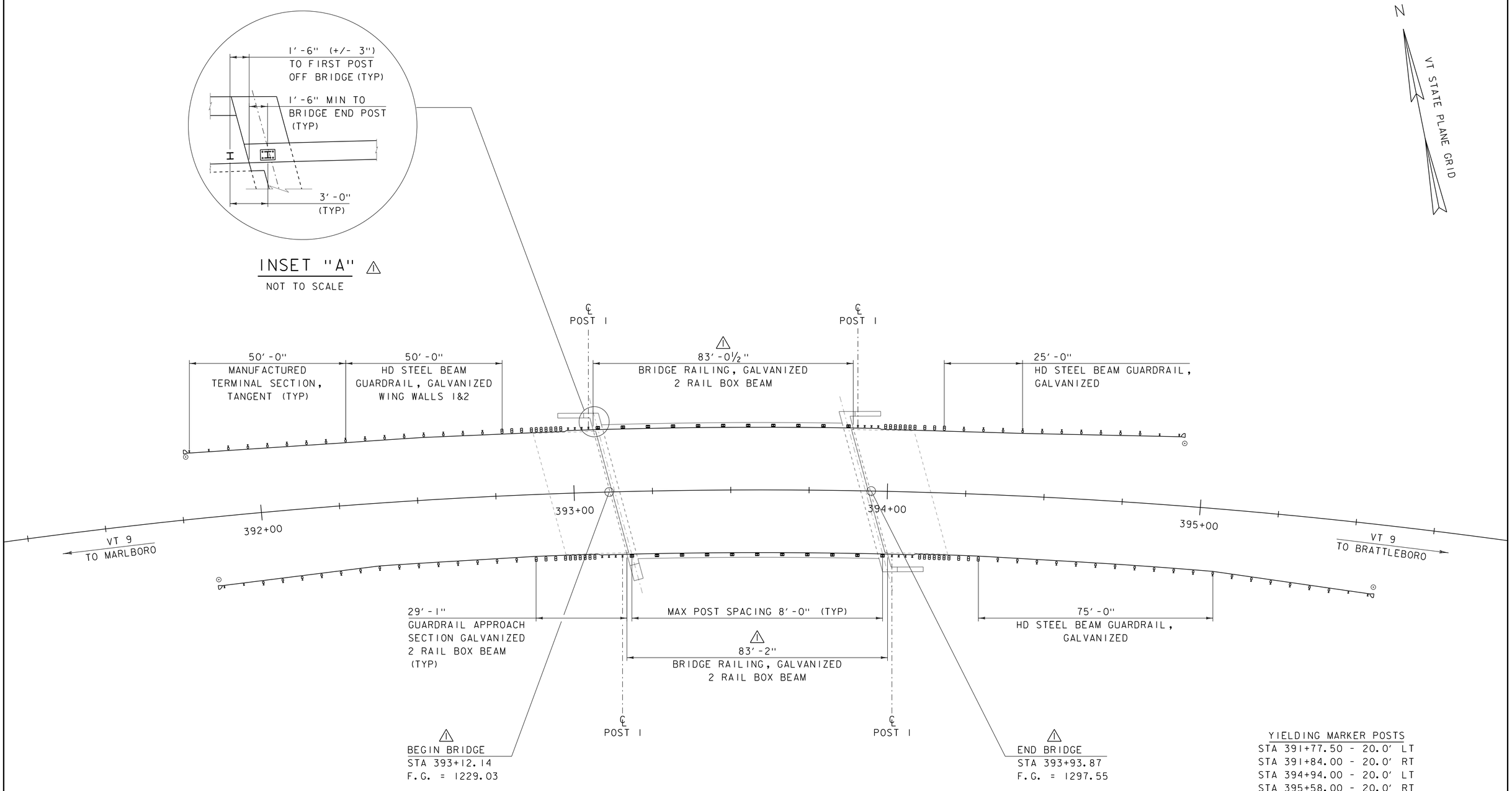

YIELDING MARKER POSTS

STA 391+77.50 - 20.0' LT
STA 391+84.00 - 20.0' RT
STA 394+94.00 - 20.0' LT
STA 395+58.00 - 20.0' RT

△1 -REVISED 4/25/2014.
REPLACES SHEET 20 IN CONTRACT PLANS.

NOTES:

1. SEE STANDARDS S-360A, S-360B, S-363, G-1 AND G-19.

RAIL LAYOUT SHEET

SCALE: 1" = 15'-0"

PROJECT NAME: MARLBORO	
PROJECT NUMBER: BRF 010-1(43)	
FILE NAME: s10b414rail.dgn	PLOT DATE: 25-APR-2014
PROJECT LEADER: K. HIGGINS	DRAWN BY: K. FRIEDLAND
DESIGNED BY: R. KLINEFELTER	CHECKED BY: J. SALVATORI
RAIL LAYOUT SHEET	SHEET 20 OF 50

NOTES:

1. TEMPORARY BARRIER ANCHOR LOCATIONS SHALL BE LAID OUT BEFORE DECK REINFORCING IS PLACED SO THAT DRILLING FOR ANCHOR BOLTS DOES NOT DAMAGE DECK REINFORCING STEEL.

2. ALL SUPERSTRUCTURE REINFORCING STEEL SHALL MEET THE REQUIREMENTS FOR LEVEL III CORROSION RESISTANCE IN ACCORDANCE WITH SECTION 507.

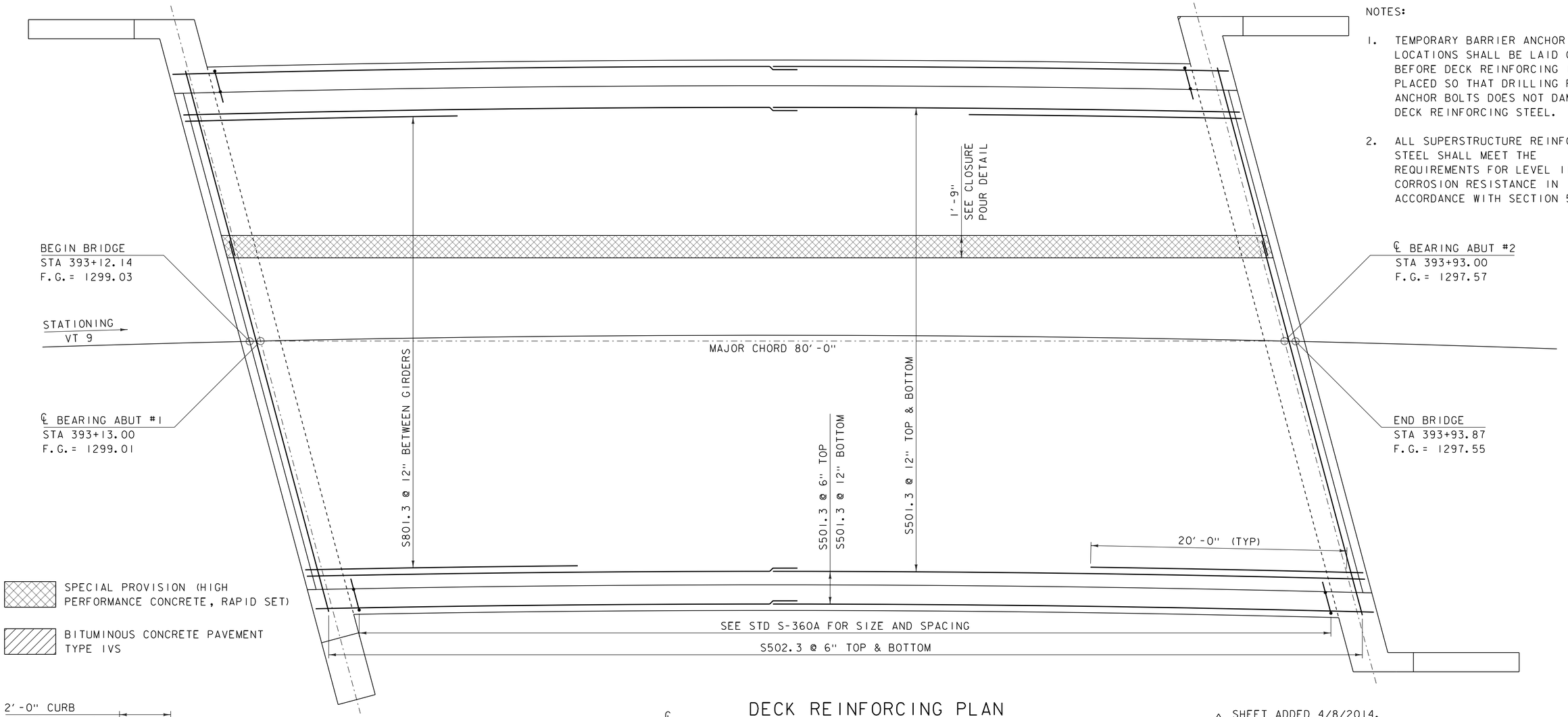

DECK REINFORCING PLAN

SCALE 1/4" = 1'-0"

⚠ SHEET ADDED 4/8/2014.
REPLACES SHEET 24 IN CONTRACT PLANS.

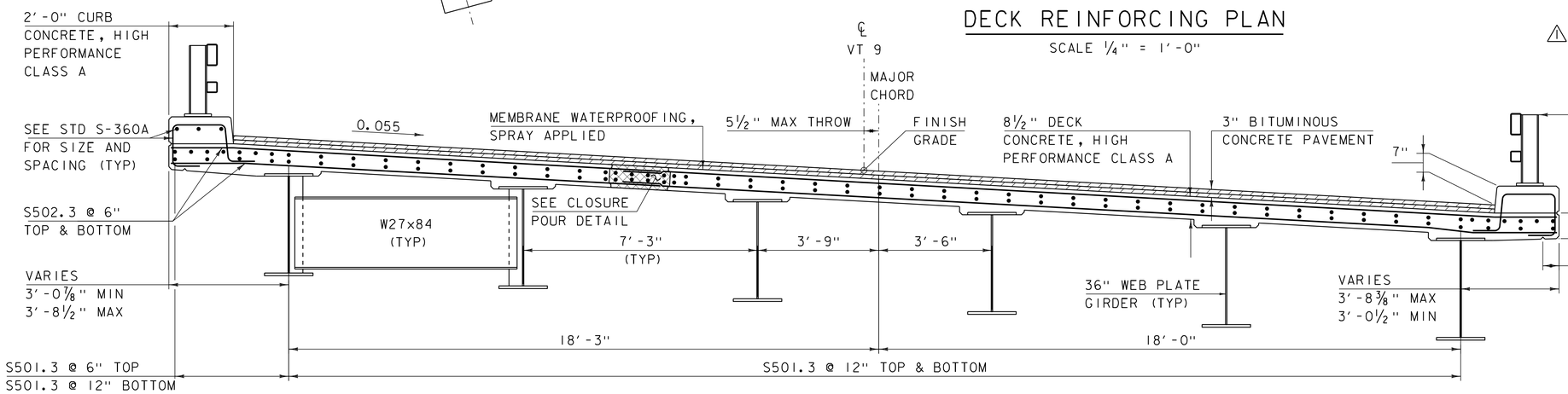

TYPICAL DECK REINFORCEMENT

SCALE 1/2" = 1'-0"

NOTE:

NF = NEAR FACE
FF = FAR FACE
EF = EACH FACE
▲ = CUT TO FIT IN FIELD
3" CLEAR, UNLESS OTHERWISE SPECIFIED ON THE PLANS.
2'-2" BAR LAP UNLESS OTHERWISE SPECIFIED ON THE PLANS.

PROJECT NAME: MARLBORO	
PROJECT NUMBER: BRF 010-1(43)	
FILE NAME: s10b414sup.dgn	PLOT DATE: 08-APR-2014
PROJECT LEADER: K. HIGGINS	DRAWN BY: K. FRIEDLAND
DESIGNED BY: R. KLINEFELTER	CHECKED BY: R. KLINEFELTER
DECK REINFORCING PLAN	SHEET 24 OF 50

⚠

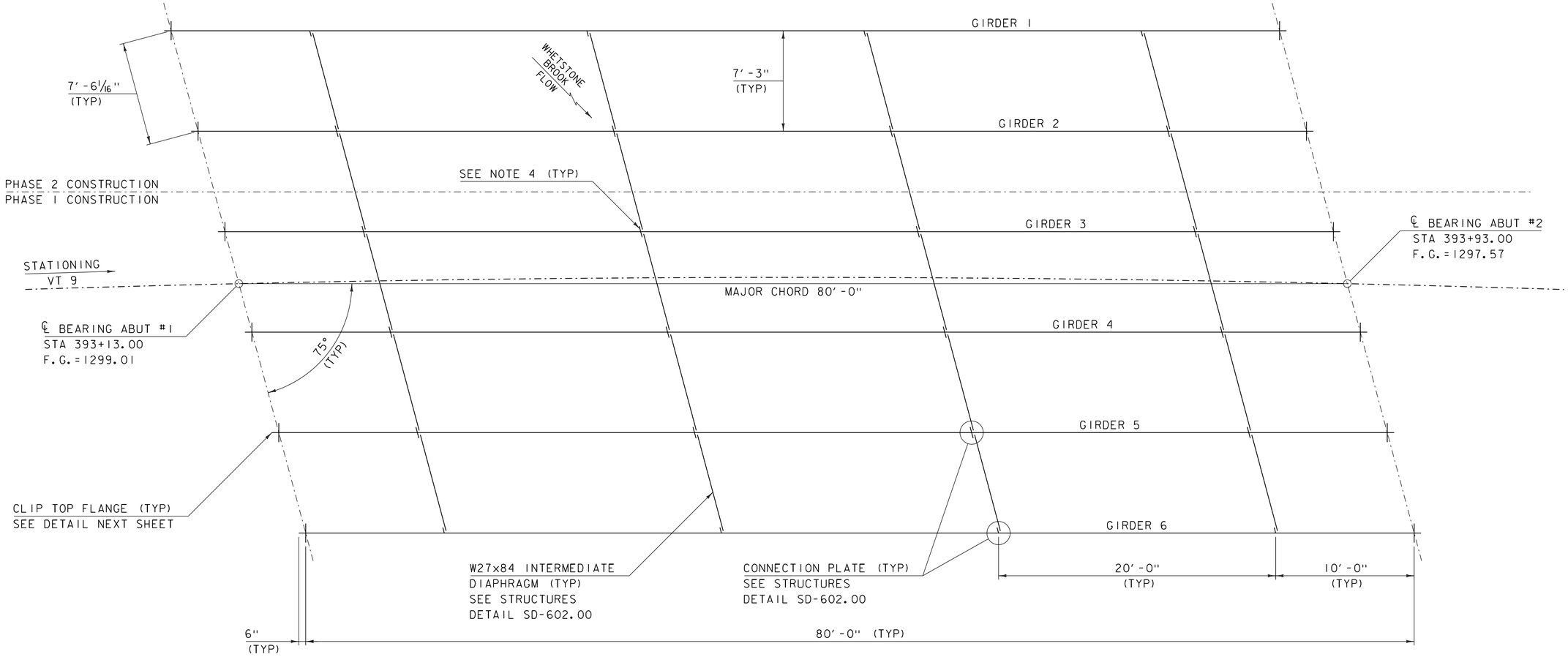

FRAMING PLAN

SCALE 1/4" = 1'-0"

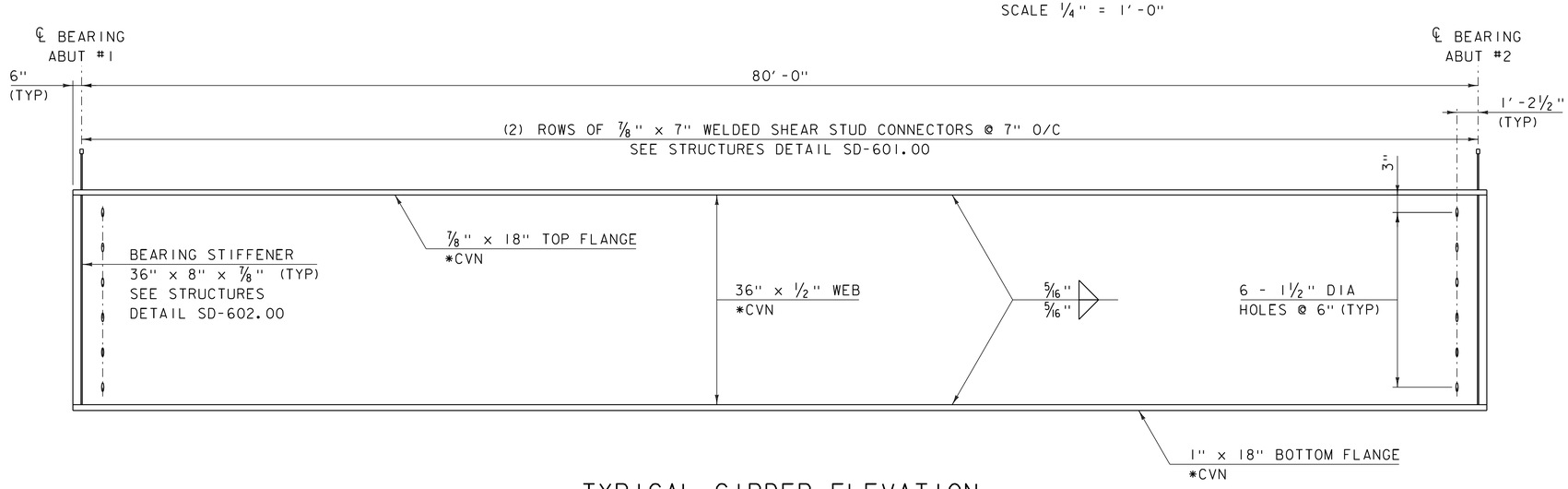

TYPICAL GIRDER ELEVATION

HORIZONTAL SCALE 1/4" = 1'-0"
VERTICAL SCALE 1" = 1'-0"

NOTES:

1. *CVN DENOTES THAT CHARPY V-NOTCH TEST IS REQUIRED.
2. ALL STEEL SHALL BE GRADE 50W.
3. PLACE DRIP PLATE ON LOW END OF EXTERIOR GIRDERS. SEE STRUCTURES DETAIL SD-601.00.
4. BOLT HOLES SHALL BE OMITTED IN THE CONNECTION PLATES ON THE LEFT SIDE OF GIRDER 3. AFTER THE DIAPHRAGMS HAVE BEEN BOLTED TO GIRDER 2, BOLT HOLES IN THE GIRDER 3 CONNECTION PLATES SHALL BE FIELD DRILLED FOR PROPER FITUP.

△1 -SHEET ADDED 4/8/2014.
REPLACES SHEET 25 IN CONTRACT PLANS.

PROJECT NAME: MARLBORO	
PROJECT NUMBER: BRF 010-1(43)	
FILE NAME: s10b414fra.dgn	PLOT DATE: 08-APR-2014
PROJECT LEADER: K. HIGGINS	DRAWN BY: R. KLINEFELTER
DESIGNED BY: R. KLINEFELTER	CHECKED BY: J. SALVATORI
FRAMING PLAN & GIRDER ELEVATION	SHEET 25 OF 50

△1

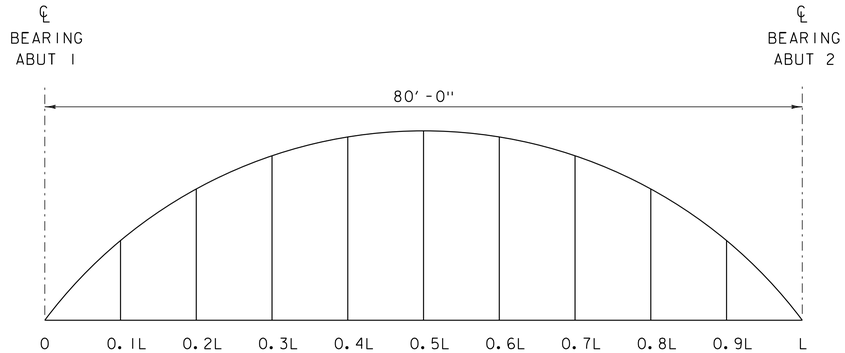

CAMBER DIAGRAM

NOT TO SCALE

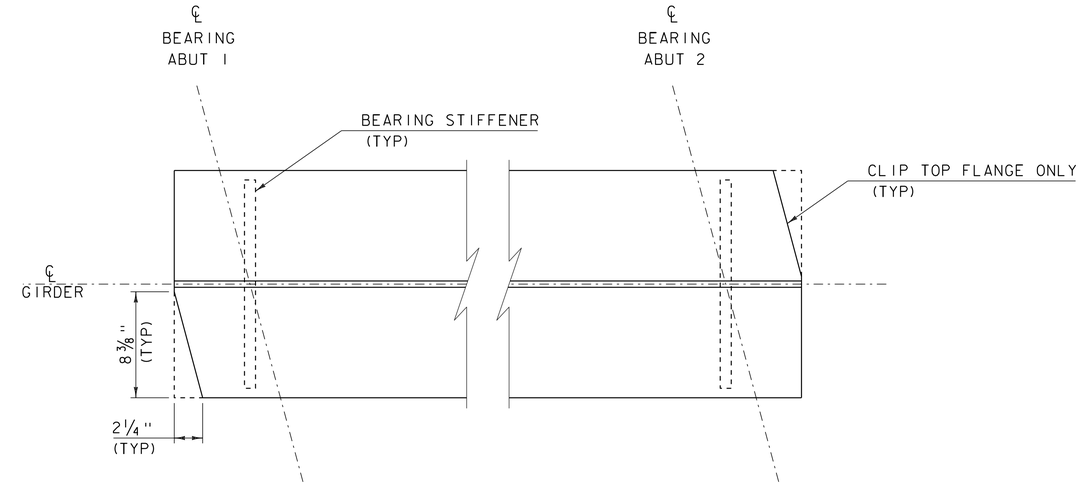

TOP FLANGE CLIP DETAIL

SCALE 1" = 2'-0"

	0	0.1L	0.2L	0.3L	0.4L	0.5L	0.6L	0.7L	0.8L	0.9L	L
Steel Deflection	0	1/8	1/4	3/8	7/16	7/16	7/16	3/8	1/4	1/8	0
Slab & Super Deflection	0	3/4	1 7/16	1 15/16	2 1/4	2 3/8	2 1/4	1 15/16	1 7/16	3/4	0
Total Deflection	0	7/8	1 11/16	2 5/16	2 11/16	2 13/16	2 11/16	2 5/16	1 11/16	7/8	0
Residual Camber	0	3/8	5/8	13/16	15/16	1	15/16	13/16	5/8	3/8	0
Total Camber	0	1 1/4	2 5/16	3 1/8	3 5/8	3 13/16	3 5/8	3 1/8	2 5/16	1 1/4	0

CAMBER AND DEFLECTION

(INCHES)

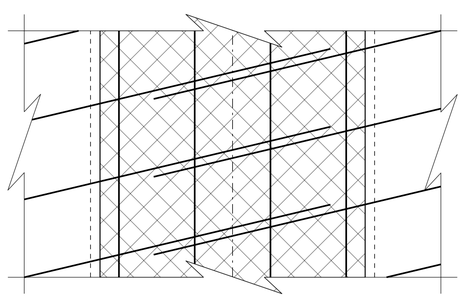

CLOSURE POUR DETAIL PLAN

SCALE 2" = 1'-0"

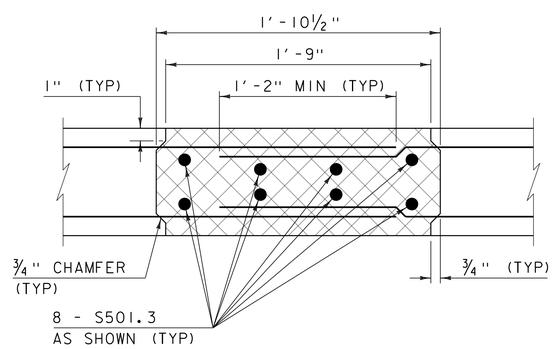

CLOSURE POUR DETAIL SECTION

SCALE 2" = 1'-0"

PHASED DECK CONSTRUCTION NOTES:

1. PHASE 2 DECK CONSTRUCTION INVOLVES ONLY TWO GIRDERS. THE CONTRACTOR SHALL DETERMINE IF ADDITIONAL TEMPORARY BRACING IS NEEDED TO PREVENT LATERAL MOVEMENT OF THE GIRDERS DURING THE PHASE 2 DECK PLACEMENT. IF USED, TEMPORARY BRACING MUST BE DESIGNED TO ALLOW FOR FREEDOM OF VERTICAL MOVEMENT SO THAT GIRDER DEFLECTION DUE TO THE DECK CONCRETE WILL OCCUR AS PREDICTED.

2. FOR PHASE 2 DECK CONSTRUCTION, ALL FORMWORK AND THE FINISHING MACHINE MUST BE COMPLETELY SUPPORTED BY THE PHASE 2 GIRDERS. THE PHASE 1 STRUCTURE SHALL NOT BE USED TO SUPPORT ANY PORTION OF THE FORMWORK OR FINISHING MACHINE.

3. DIAPHRAGMS BETWEEN GIRDERS 2 AND 3 ARE TO BE INSTALLED AFTER THE PHASE 2 DECK CURE PERIOD IS COMPLETE AND BEFORE THE DECK CLOSURE POUR.

4. REINFORCING STEEL IN THE CLOSURE POUR SHALL NOT BE TIED UNTIL AFTER THE PHASE 2 DECK CURE PERIOD IS COMPLETE.

5. FORMWORK FOR SURFACES ON THE DECK THAT WILL BE IN CONTACT WITH THE CLOSURE POUR SHALL BE TREATED WITH CONCRETE SURFACE RETARDER, OR SIMILAR, TO PROVIDE A ROUGHENED SURFACE. THE ROUGHENED SURFACES SHALL BE POWER WASHED WITH WATER PRIOR TO THE CLOSURE POUR.

6. THE METHOD OF FORMING THE DECK CLOSURE POUR SHALL BE DETERMINED BY THE CONTRACTOR. THE FORMS SHALL BE REMOVABLE AND ABLE TO ACCOMMODATE DIFFERENTIAL CAMBER. FORM SUPPORTS SHALL NOT BE ATTACHED TO ANY PART OF THE STRUCTURE BY DRILLING OR SIMILAR MEANS.

△1 -SHEET ADDED 4/8/2014.
REPLACES SHEET 26 IN CONTRACT PLANS.

PROJECT NAME: MARLBORO
PROJECT NUMBER: BRF 010-1(43)

FILE NAME: s10b414sup.dgn
PROJECT LEADER: K. HIGGINS
DESIGNED BY: R. KLINEFELTER
CAMBER & DEFLECTION

PLOT DATE: 08-APR-2014
DRAWN BY: K. FRIEDLAND
CHECKED BY: J. SALVATORI
SHEET 26 OF 50

△1

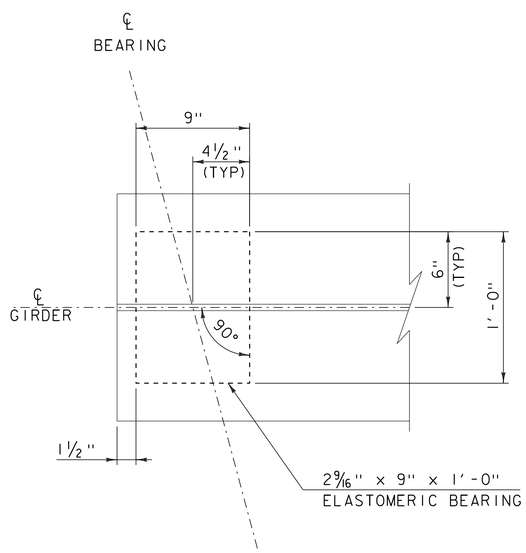

ELASTOMERIC BEARING LAYOUT

SCALE 1" = 2'-0"

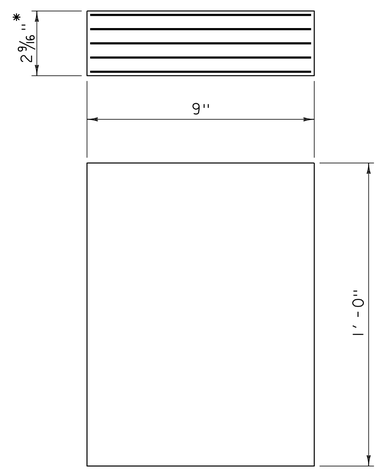

* 2 - ⅛" EXTERIOR LAYERS OF ELASTOMER
4 - ½" INTERIOR LAYERS OF ELASTOMER
5 - 1⁄16" STEEL REINFORCING PLATES

ELASTOMERIC BEARING DETAIL

SCALE 1" = 4'-0"

BEARING NOTES:

1. BEARINGS SHALL CONFORM TO THE APPLICABLE SUBSECTIONS OF SECTIONS 531 AND 731.
2. ALL REINFORCEMENT BETWEEN LAYERS OF ELASTOMER SHALL BE STEEL MEETING THE REQUIREMENTS OF SUBSECTION 714.02. ALL INTERNAL STEEL PLATES SHALL BE SAND BLASTED AND FREE OF COATINGS, RUST AND MILL SCALE. THE PLATES SHALL BE FREE OF SHARP EDGES AND BURRS.
3. STEEL REINFORCED ELASTOMERIC BEARINGS SHALL HAVE A MINIMUM ⅛" EDGE SEAL OF ELASTOMER INTEGRAL WITH BEARING OVER ALL INTERNAL PLATES.
4. THE ELASTOMER WAS DESIGNED WITH A SHEAR MODULUS OF 110 PSI +/- 15%.
5. THE CONCRETE UNDER THE BEARING DEVICE SHALL BE LEVEL.

⚠ -SHEET ADDED 4/8/2014.
REPLACES SHEET 27 IN CONTRACT PLANS.

PROJECT NAME: MARLBORO	
PROJECT NUMBER: BRF 010-1(43)	
FILE NAME: s10b414sup.dgn	PLOT DATE: 08-APR-2014
PROJECT LEADER: K. HIGGINS	DRAWN BY: R. KLINEFELTER
DESIGNED BY: R. KLINEFELTER	CHECKED BY: J. GRIGAS
⚠ BEARING DETAILS	SHEET 27 OF 50

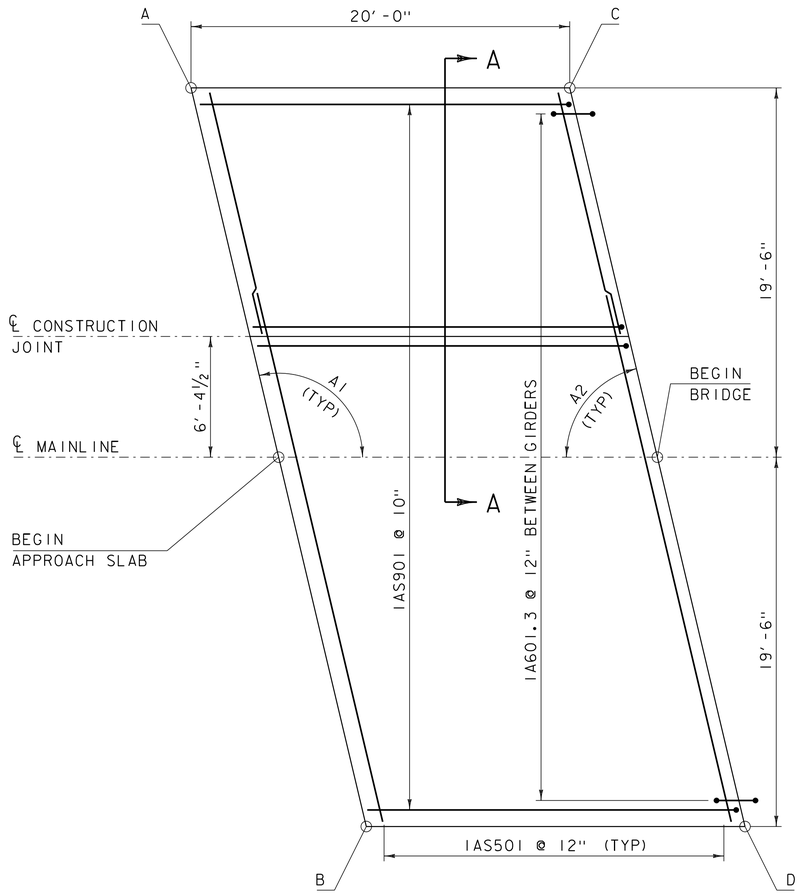

APPROACH SLAB #1 PLAN VIEW

SCALE ¼" = 1'-0"

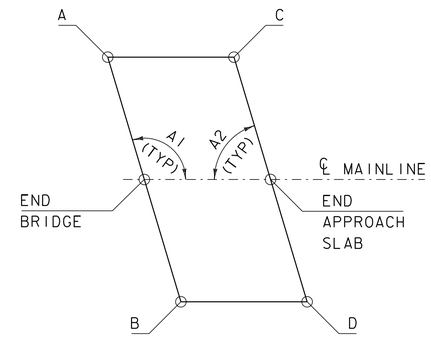

APPROACH SLAB #2 PLAN VIEW

NOT TO SCALE

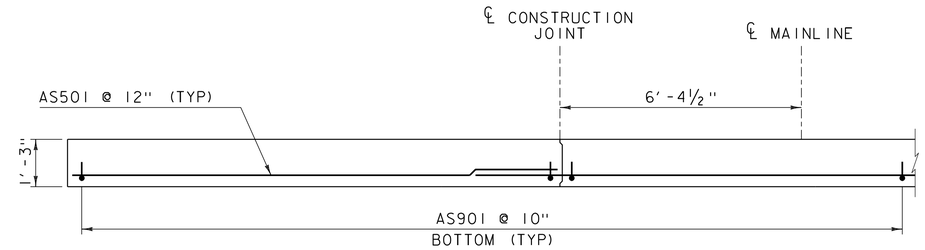

SECTION A-A

SCALE ½" = 1'-0"

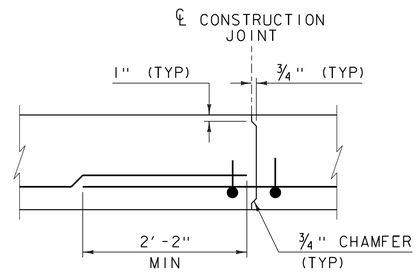

CONSTRUCTION JOINT SECTION

SCALE 1" = 1'-0"

APPROACH SLAB #1			
	STATION	OFFSET	ELEVATION
1A	392+87.68	-19.50	1300.19
BEGIN AS #1	392+92.14	℄	1299.06
1B	392+96.70	19.50	1297.93
1C	393+07.45	-19.50	1299.92
END AS #1	393+12.14	℄	1298.78
1D	393+16.94	19.50	1297.63

APPROACH SLAB #2			
	STATION	OFFSET	ELEVATION
2A	393+88.22	-19.50	1298.49
BEGIN AS #1	393+93.87	℄	1297.30
2B	393+99.65	19.50	1296.11
2C	394+07.98	-19.50	1298.06
END AS #2	394+13.87	℄	1296.86
2D	394+19.89	19.50	1295.65

APPROACH SLAB ELEVATIONS

ALL ELEVATIONS ARE TOP OF SLAB

NOTE:
1. REINFORCING STEEL FOR APPROACH SLAB #1 SHALL BE SIMILAR TO APPROACH SLAB #2.

APPROACH SLAB #1	A1	103°
	A2	77°

APPROACH SLAB #2	A1	107°
	A2	73°

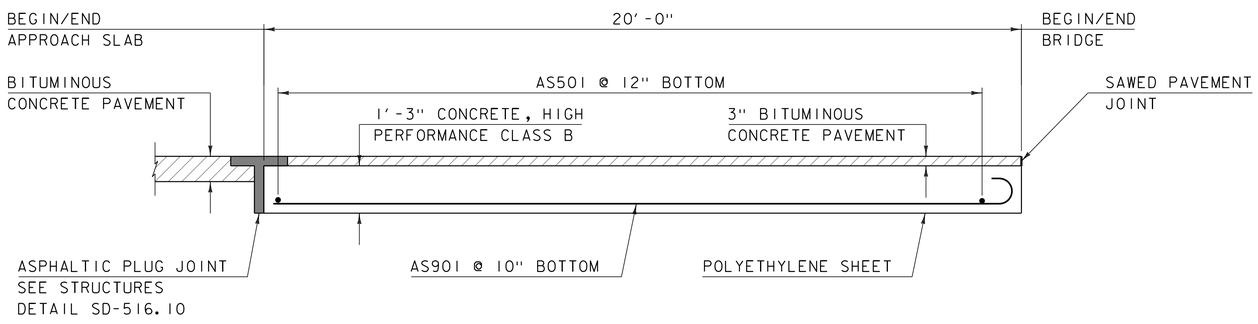

APPROACH SLAB ELEVATION VIEW

SCALE ½" = 1'-0"

NOTE:
NF = NEAR FACE
FF = FAR FACE
EF = EACH FACE
3" CLEAR, UNLESS OTHERWISE SPECIFIED ON THE PLANS.
2'-2" BAR LAP UNLESS OTHERWISE SPECIFIED ON THE PLANS.

⚠ SHEET REVISED 4/22/2014.
REPLACES SHEET 28 IN CONTRACT PLANS.

PROJECT NAME: MARLBORO
PROJECT NUMBER: BRF 010-1(43)

FILE NAME: s10b414apslab.dgn
PROJECT LEADER: K. HIGGINS
DESIGNED BY: R. KLINEFELTER
APPROACH SLAB DETAILS
PLOT DATE: 22-APR-2014
DRAWN BY: K. FRIEDLAND
CHECKED BY: R. KLINEFELTER
SHEET 28 OF 50

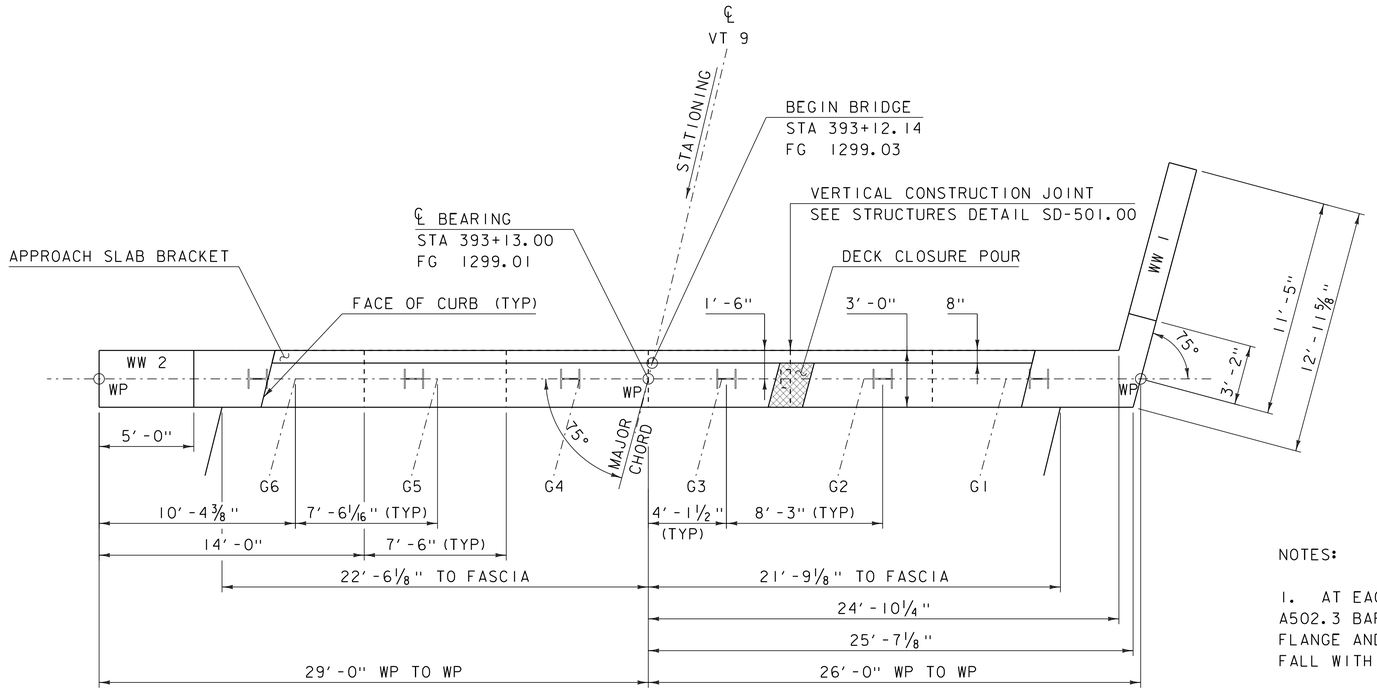

ABUTMENT 1 PLAN

SCALE ¼" = 1'-0"

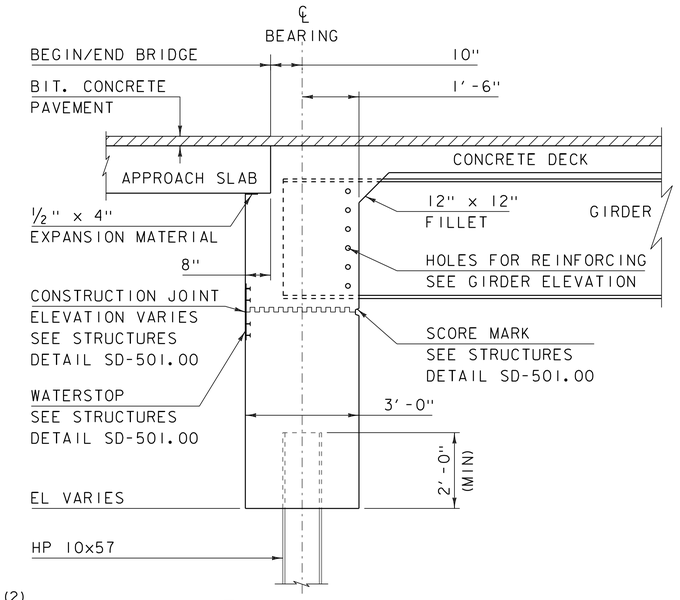

SECTION A-A
ABUTMENT TYPICAL SECTION

SCALE ½" = 1'-0"

NOTES:

1. AT EACH GIRDER LOCATION, BUNDLE (2) A502.3 BARS ON EACH SIDE OF THE GIRDER FLANGE AND OMIT THE (2) A502.3 BARS THAT FALL WITHIN THE WIDTH OF THE FLANGE.

2. TURN THE BOTTOM LEG OF A502.3 AND A801.3 BARS TO CLEAR PILES AS NEEDED.

3. THE CONCRETE IN THE ABUTMENTS AND WINGWALLS ABOVE THE BRIDGE SEAT SHALL BE CONCRETE, HIGH PERFORMANCE CLASS A. ALL OTHER SUBSTRUCTURE CONCRETE SHALL BE CONCRETE, HIGH PERFORMANCE CLASS B.

4. THE BRIDGE PLAQUE FURNISHED BY THE AGENCY SHALL BE CAST INTO WINGWALL #2. SEE STRUCTURES DETAIL SD-502.00 FOR LOCATION AND POSITIONING OF THE BRIDGE PLAQUE.

FLOW

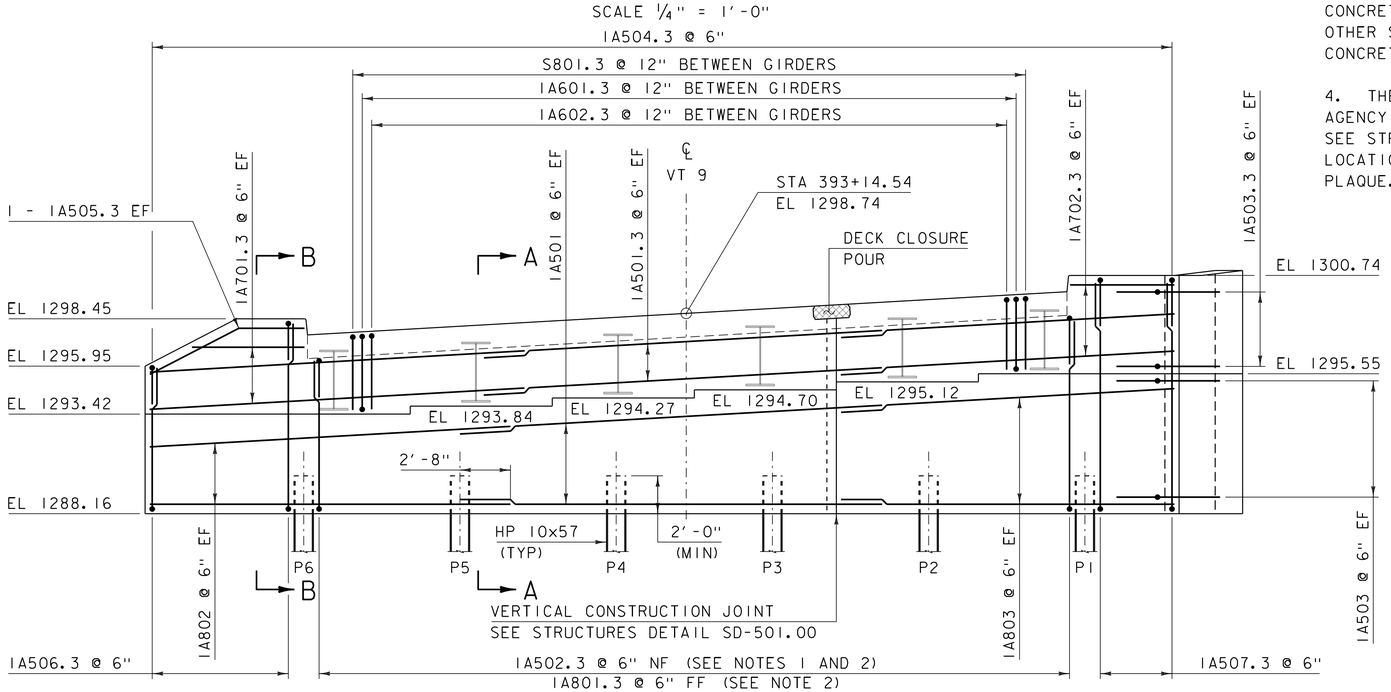

ABUTMENT 1 ELEVATION

SCALE ¼" = 1'-0"

NOTE:

NF = NEAR FACE
FF = FAR FACE
EF = EACH FACE
3" CLEAR, UNLESS OTHERWISE SPECIFIED ON THE PLANS.
2'-2" BAR LAP UNLESS OTHERWISE SPECIFIED ON THE PLANS.

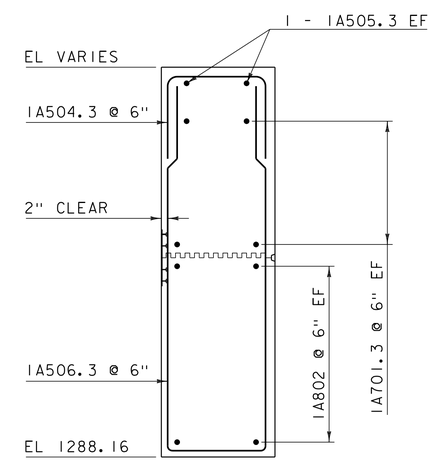

SECTION B-B
WINGWALL 2 REINFORCING TYPICAL

SCALE ½" = 1'-0"

⚠ -SHEET REVISED 4/22/2014.
REPLACES SHEET 29 IN CONTRACT PLANS.

PROJECT NAME: MARLBORO	
PROJECT NUMBER: BRF 010-1(43)	
FILE NAME: s10414sub_1.dgn	PLOT DATE: 22-APR-2014
PROJECT LEADER: K. HIGGINS	DRAWN BY: R. KLINEFELTER
DESIGNED BY: R. KLINEFELTER	CHECKED BY: J. SALVATORI
⚠ ABUTMENT 1	SHEET 29 OF 50

NOTES:

1. AT EACH GIRDER LOCATION, BUNDLE (2) A502.3 BARS ON EACH SIDE OF THE GIRDER FLANGE AND OMIT THE (2) A502.3 BARS THAT FALL WITHIN THE WIDTH OF THE FLANGE.

2. TURN THE BOTTOM LEG OF A502.3 AND A801.3 BARS TO CLEAR PILES AS NEEDED.

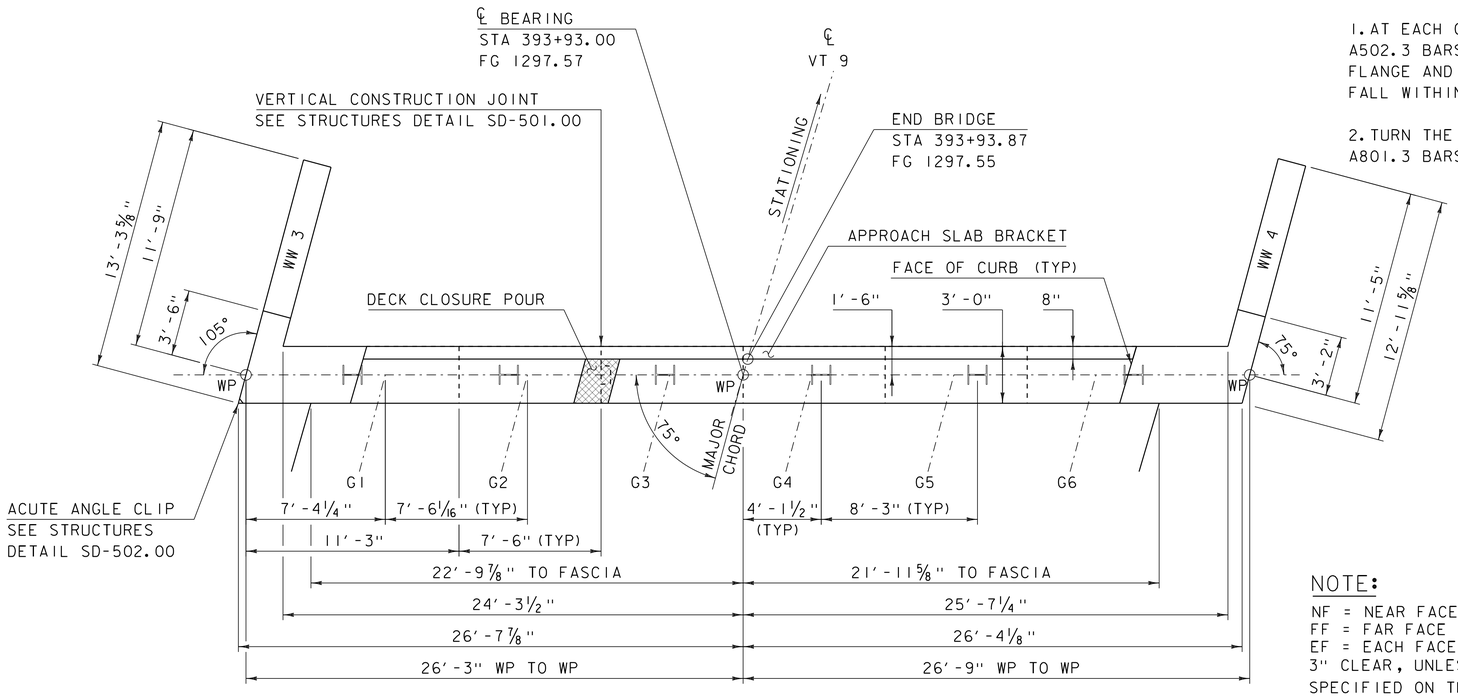

ABUTMENT 2 PLAN

SCALE ¼" = 1'-0"

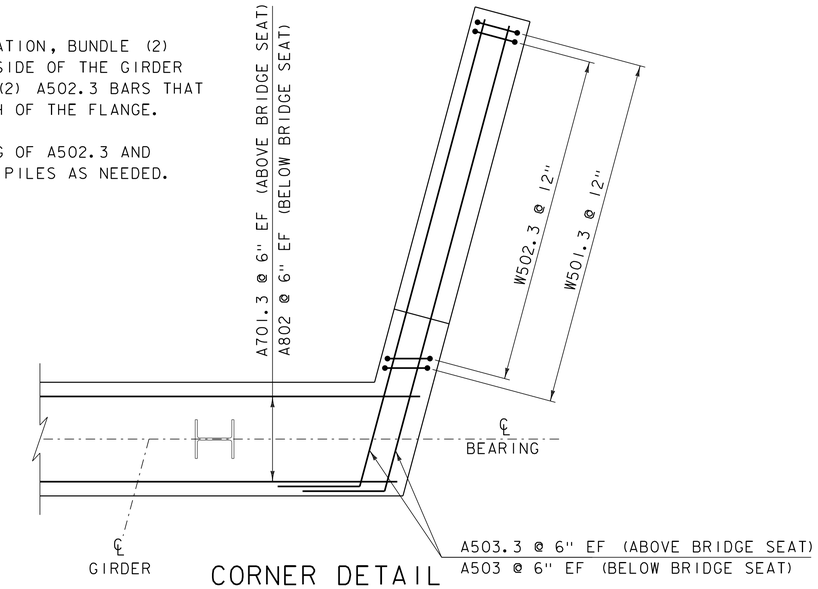

CORNER DETAIL

SCALE ½" = 1'-0"

NOTE:

NF = NEAR FACE
FF = FAR FACE
EF = EACH FACE
3" CLEAR, UNLESS OTHERWISE SPECIFIED ON THE PLANS.
2'-2" BAR LAP UNLESS OTHERWISE SPECIFIED ON THE PLANS.

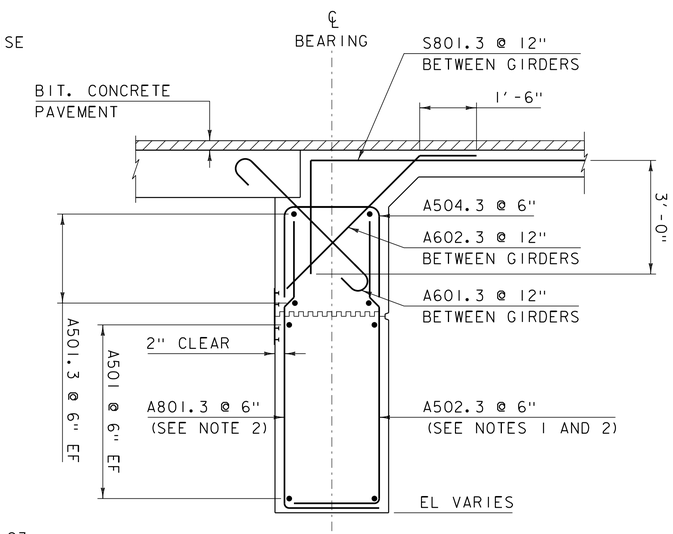

SECTION A-A
ABUTMENT REINFORCING TYPICAL

SCALE ½" = 1'-0"

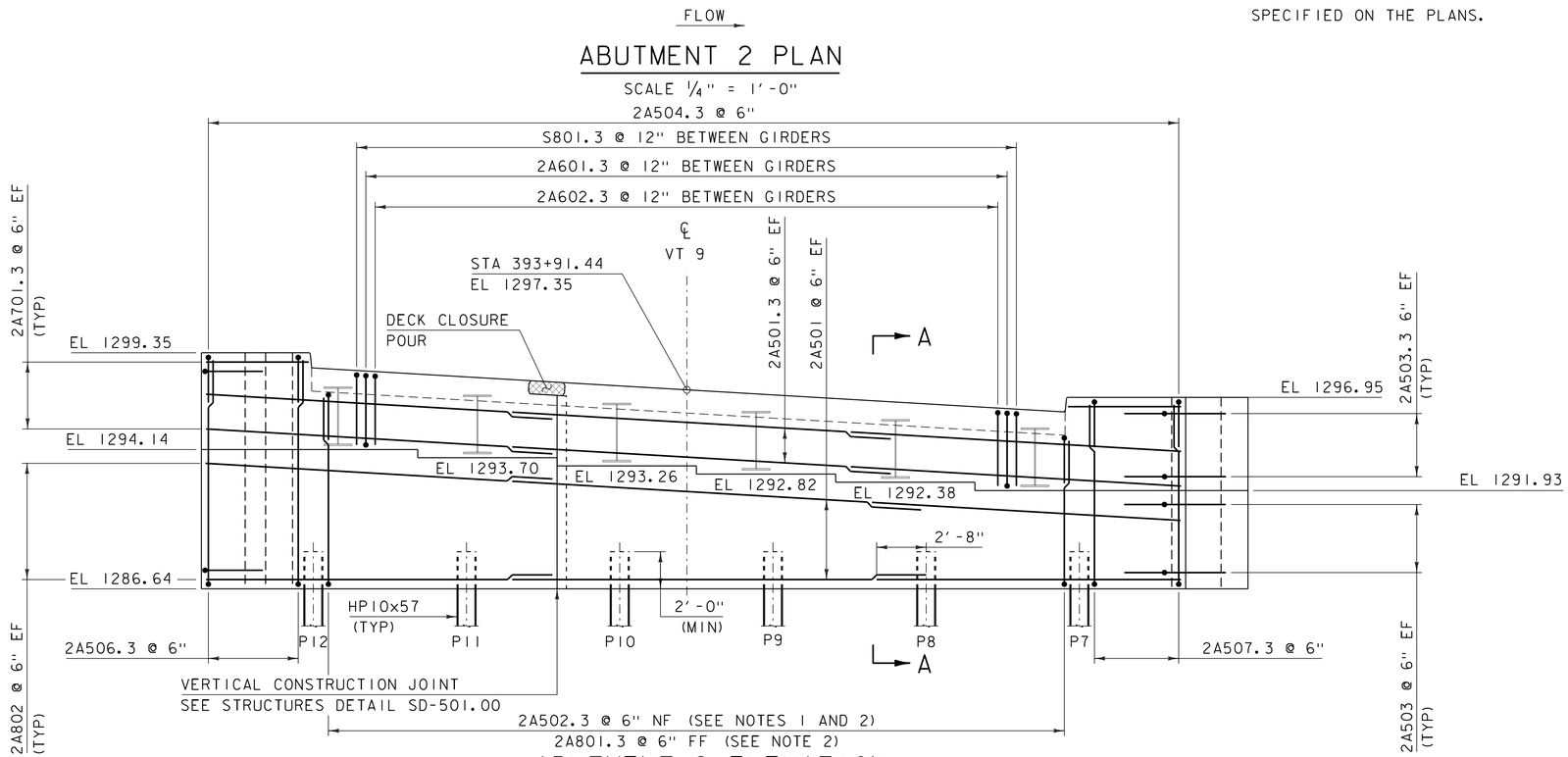

ABUTMENT 2 ELEVATION

SCALE ¼" = 1'-0"

⚠1 -SHEET REVISED 4/22/2014.
REPLACES SHEET 32 IN CONTRACT PLANS.

PROJECT NAME: MARLBORO	
PROJECT NUMBER: BRF 010-1(43)	
FILE NAME: s10414sub_2.dgn	PLOT DATE: 22-APR-2014
PROJECT LEADER: K. HIGGINS	DRAWN BY: R. KLINEFELTER
DESIGNED BY: R. KLINEFELTER	CHECKED BY: J. SALVATORI
⚠1 ABUTMENT 2	SHEET 32 OF 50

THIS SHEET INTENTIONALLY LEFT BLANK

⚠ -SHEET ADDED 4/25/2014.
REPLACES SHEET 30 IN CONTRACT PLANS.

PROJECT NAME: MARLBORO	
PROJECT NUMBER: BRF 010-1(43)	
FILE NAME: s10414sub_1.dgn	PLOT DATE: 25-APR-2014
PROJECT LEADER: K. HIGGINS	DRAWN BY: R. KLINEFELTER
DESIGNED BY: R. KLINEFELTER	CHECKED BY: J. SALVATORI
⚠ BLANK	SHEET 30 OF 50

THIS SHEET INTENTIONALLY LEFT BLANK

⚠ -SHEET ADDED 4/25/2014.
REPLACES SHEET 31 IN CONTRACT PLANS.

PROJECT NAME: MARLBORO	
PROJECT NUMBER: BRF 010-1(43)	
FILE NAME: s10414sub_1.dgn	PLOT DATE: 25-APR-2014
PROJECT LEADER: K. HIGGINS	DRAWN BY: R. KLINEFELTER
DESIGNED BY: R. KLINEFELTER	CHECKED BY: J. SALVATORI
⚠ BLANK	SHEET 31 OF 50

THIS SHEET INTENTIONALLY LEFT BLANK

⚠ -SHEET ADDED 4/25/2014.
REPLACES SHEET 33 IN CONTRACT PLANS.

PROJECT NAME: MARLBORO	
PROJECT NUMBER: BRF 010-1(43)	
FILE NAME: s10414sub_2.dgn	PLOT DATE: 25-APR-2014
PROJECT LEADER: K. HIGGINS	DRAWN BY: R. KLINEFELTER
DESIGNED BY: R. KLINEFELTER	CHECKED BY: J. SALVATORI
⚠ BLANK	SHEET 33 OF 50

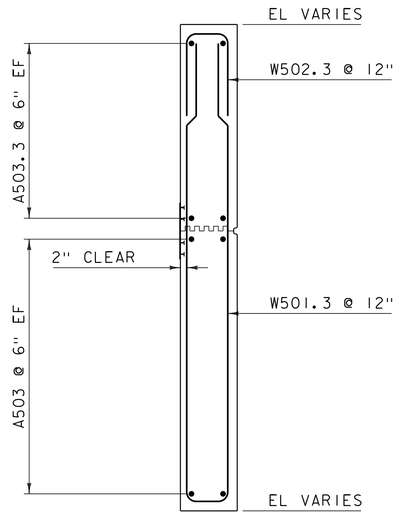

WINGWALL TYPICAL

SCALE ½" = 1'-0"

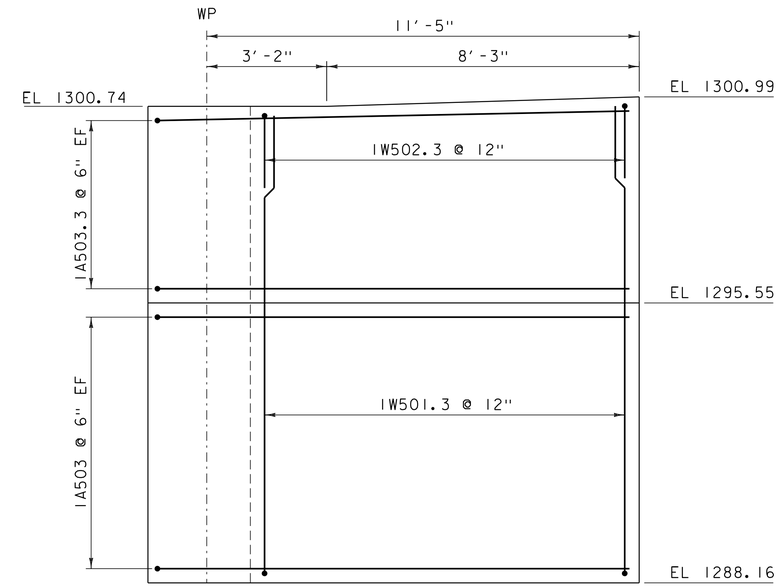

WINGWALL 1 ELEVATION

SCALE ½" = 1'-0"

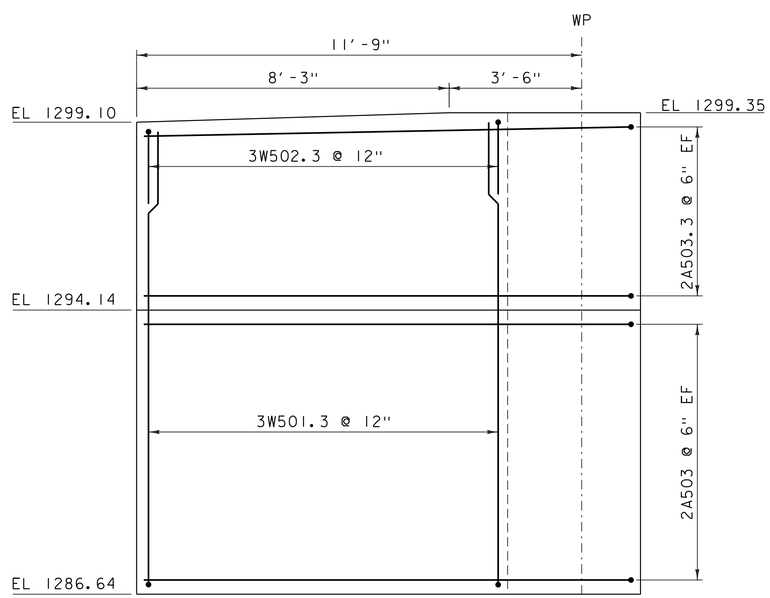

WINGWALL 3 ELEVATION

SCALE ½" = 1'-0"

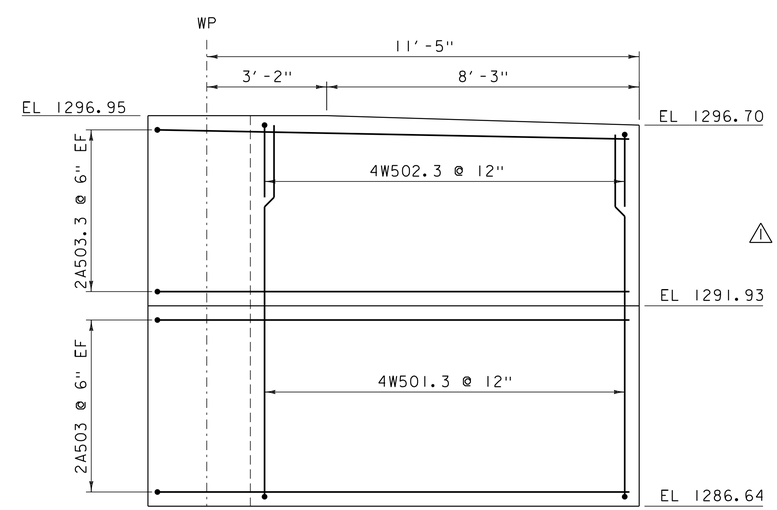

WINGWALL 4 ELEVATION

SCALE ½" = 1'-0"

⚠ -SHEET REVISED 4/22/2014.
REPLACES SHEET 34 IN CONTRACT PLANS.

NOTE:

NF = NEAR FACE
FF = FAR FACE
EF = EACH FACE
3" CLEAR, UNLESS OTHERWISE SPECIFIED ON THE PLANS.
2'-2" BAR LAP UNLESS OTHERWISE SPECIFIED ON THE PLANS.

PROJECT NAME: MARLBORO	
PROJECT NUMBER: BRF 010-1(43)	
FILE NAME: s10414ww.dgn	PLOT DATE: 22-APR-2014
PROJECT LEADER: K. HIGGINS	DRAWN BY: J. SALVATORI
DESIGNED BY: R. KLINEFELTER	CHECKED BY: R. KLINEFELTER
WINGWALL DETAILS	SHEET 34 OF 50